VICINITY MAP

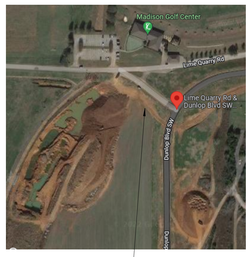

PROJECT SITE

N

THE ROBERT
MADISON, ALABAMA

PROJECT NARRATIVE:

This project narrative is provided as a brief outline of the proposed scope of building improvements for this Project.

The Project consists of the construction of a new multi-unit residential rental apartment complex in Madison, AL, accessed off of Dunlop Blvd and Lime Quarry Rd. The program includes a total of 270 dwellings units of 7 different unit types (1, 2, & 3 bedroom) with solariums & balconies.

The dwelling units are distributed among 6 residential buildings of 2 different building types. The residential buildings are designed to provide 4 floors of dwelling units. The buildings are classified as V(A) construction, and are sprinklered to the requirements of NFPA13R systems. The residential and amenity buildings are designed as wood frame structures that include engineered truss components for both framed floors and roofs. The buildings are placed on concrete slab on grade foundations with integral thickened edges and grade beams.

The Project program also includes a Clubhouse, a Fitness Center & a Trash Enclosure, which are submitted under a seperate Cover.

This Project Scope also includes site engineering and landscape improvements that are submitted under a spearate cover.

SYMBOL KEY:

?	DOOR SYMBOL	NUMBERED BY TYPE REFER TO SCHEDULE
?	WINDOW SYMBOL	NUMBERED BY TYPE REFER TO SCHEDULE
?	WALL TAG	? — WALL TYPE OR UL
?	GRID LINE TARGET	A,B,C, ETC. IN ONE DIRECTION 1,2,3, ETC. IN THE OTHER
? ?	ROOM TAG	? ? — ROOM NUMBER
XX	TITLE	? ? ? — DRAWING NUMBER; SCALE
? ?	ELEVATION REFERENCES	? ? — DIRECTION OF VIEW; SHEET NUMBER
? ?	SECTION REFERENCES	? ? — DIRECTION OF VIEW; SHEET NUMBER
? ?	DETAIL REFERENCES	? ? — DETAIL AREA; SHEET NUMBER
X X X X	INTERIOR ELEVATIONS	X X X X — VIEW NUMBER; DIRECTION OF VIEW; SHEET NUMBER
	LEVEL REFERENCE	Name Elevation
6:12	ROOF SLOPE ARROW	6:12 — SLOPE; SLOPE DIRECTION
6 12	ROOF SLOPE	6 12 — SLOPE
XX	ACCESSORY TAG	XX — LOCATION OF NOTE APPLICATION; NOTE NUMBER
XX	NOTE TAG	XX — LOCATION OF NOTE APPLICATION; NOTE NUMBER
XX	LEVEL CHANGE	XX — CHANGE IN LEVEL
1	REVISIO N MARK	1 — REV. LOCATION; REV. No.

DEFERRED SUBMITTALS:

1) Deferral of any submittal items shall have the prior approval of the Building Official having jurisdiction.

2) Submittal documents for deferred submittal items shall be submitted to the Entity designated below for the project who shall review them. These will then be forwarded by the Owner to the Building Official having jurisdiction with a notation indicating that the deferred submittal documents have been reviewed and that they have been found to be in general compliance with the design of the project.

3) The deferred submittal items shall not be installed until their design and submittal documents have been approved.

LIST (INCLUDING BUT NOT LIMITED TO):

A) BUILDING RAILINGS & GUARDRAILS
REVIEW BY ARCHITECT

B) FIRE ALARM SYSTEM
REVIEW BY ARCHITECT

C) AUTOMATIC FIRE SUPPRESSION (SPRINKLER) SYSTEM REVIEW BY ARCHITECT

D) PRE-ENGINEERED (WOOD) FLOOR & ROOF TRUSS SYSTEMS
REVIEW BY ARCHITECT

E) BUILDING IDENTIFICATION AND WAYFINDING SIGNAGE REVIEW BY OWNER

F) SITE FENCING
REVIEW BY LANDSCAPE ARCHITECT

OWNER/DEVELOPER	ARCHITECT	CIVIL ENGINEER	STRUCTURAL	MECHANICAL / ELECTRICAL / PLUMBING	LANDSCAPE ARCHITECT	INTERIOR DESIGN	CONTRACTOR
ROHDIE MADISON, LLC ATTN: RON LEICHTNER 52 VANDERBILT NEW YORK, NEW YORK 10017 PHONE (212) 682-5784	FUGLEBERG KOCH PLLC ATTN: MICHAEL GOVE, AIA 2555 TEMPLE TRAIL WINTER PARK, FLORIDA 32789 PHONE (407) 629-0595 FAX (407) 628-1057	MULLINS, LLC MULLINS, LLC 2101 WEST CLINTON AVE, SUITE 503, HUNTSVILLE, AL PHONE (256) 690-5312	ASE ENGINEERING SERVICES, INC. ASE ENGINEERINGSERVICES, INC 10244 EAST COLONIAL DRIVE, SUITE 202 ORLANDO, FLORIDA 32817 PHONE (407) 677-5565 FAX (407) 730-2999	JOSEPH, LAWRENCE & CO Consulting Engineers 1180 HARWOOD AVE. SUITE 3000 ALTAMONTE SPRINGS, FLORIDA 32714 PHONE (321) 972-4466	TBD ATTN: NAME ADDRESS CITY, FL 3xxxx (407) 123-4567	ALYSSA ROHDIE 52 VANDERBILT NEW YORK, NEW YORK 10017 PHONE (212) 682-5784	ESSIAN CONSTRUCTION & DEVELOPMENT ATTN: RICHARD SHASSIAN 999 DOUGLAS AVE, STE 1115 ALTAMONTE SPRINGS, FLORIDA 32714 PHONE (407) 245-8920

ARCHITECTURAL ABBREVIATIONS

A

ABV	ABOVE
ACC.FL.	ACCESS FLOOR
ACOUST.	ACOUSTICAL
ACT	ACOUSTICAL CEILING TILE
A.D.	AREA DRAIN
ADJ.	ADJACENT
ADJUST.	ADJUSTABLE
AFF	ABOVE FINISHED FLOOR
ALT.	ALTERNATE
ALUM.	ALUMINUM
AL.	ALUMINUM
ANG.	ANGLE
ANOD.	ANODIZED
APPROX.	APPROXIMATE
ARCH	ARCHITECTURAL
AUTO.	AUTOMATIC
AV.	AVERAGE

B

BD.	BOARD
BLBD.	BLACK BOARD
BLDG.	BUILDING
BLK/BLK'G	BLOCK OR BLOCKING
BM.	BEAM
BOT.	BOTTOM
B.O.	BOTTOM OF
BRK.	BRICK
BSMT.	BASEMENT
BTWN	BETWEEN
B.U.	BUILT-UP
B.W.	BOTH WAYS

C

CAB.	CABINET
CB. / TB.	CORKBOARD/TACKBOARD
C.B.	CATCH BASIN
CEM.	CEMENT
CER.	CERAMIC
C.H.	CEILING HEIGHT
CIR.	CIRCLE
C.J.	CONTROL JOINT
CLG.	CEILING
CLKG.	CAULKING
CL	CENTER LINE
CLO.	CLOSET
CLR.	CLEAR
CMU.	CONCRETE MASONRY UNIT
C.O.	CLEAR OPENING
COL.	COLUMN
COMM.	COMMUNICATION
CONC.	CONCRETE
CONN.	CONNECTION
CONST.	CONSTRUCTION
CONTR.	CONTRACTOR
COOR.	COORDINATE
CONT.	CONTINUOUS
CPT.	CARPET
CSMT.	CASEMENT
C.T.	CERAMIC TILE
CTR.	CENTER

D

D.	DEPTH
DBL.	DOUBLE
DEG.	DEGREE
DET.	DETAIL
D.F.	DRINKING FOUNTAIN
DIA.	DIAMETER
DIAG	DIAGONAL
DIFF.	DIFFUSER
DIM.	DIMENSION
DISP.	DISPOSAL
DIV.	DIVIDER
DN.	DOWN
DR	DOOR
DRAP.	DRAPERY
DS.	DOWNSPOUT
DTL.	DETAIL
DWG	DRAWING
DWR.	DRAWER
DW	DISHWASHER

E

E	EAST
EA.	EACH
E.F.	EACH FACE
E.J.	EXPANSION JOINT
E.I.F.S.	EXTERIOR INSULATION AND FINISH SYSTEM
EL / ELEV.	ELEVATION
ELEC.	ELECTRICAL
ELEV.	ELEVATOR
EMER.	EMERGENCY
ENCL.	ENCLOSURE
EQ.	EQUAL
EQUIP.	EQUIPMENT
E.W.	EACH WAY
E.W.C.	ELECTRIC WATER COOLER
EXIST.	EXISTING
EXP. JT.	EXPANSION JOINT
EXT.	EXTERIOR
EXTRU.	EXTRUDED

F

F.A.	FIRE ALARM
F.D.	FLOOR DRAIN
F.D.C.	FIRE DEPARTMENT CONNECTION
FDN.	FOUNDATION
F.E.	FIRE EXTINGUISHER
F.E.C.	FIRE EXTINGUISHER CABINET
FED.	FEDERAL
F.F.	FINISH FLOOR
F.H.C.	FIRE HOSE CABINET
FIN.	FINISH
FIXT.	FIXTURE
F.L.	FLOW LINE
FLR.	FLOOR
FLUOR	FLUORESCENT
F.O.B.	FACE OF BRICK
F.O.C.	FACE OF CONCRETE
F.O.F.	FACE OF FINISH
F.O.S.	FACE OF STUD
F.R.	FIRE RETARDANT
F.S.	FULL SIZE
FT.	FOOT OR FEET
FTG.	FOOTING
FURR	FURRING
FUT.	FUTURE
F.V.	FIELD VERIFY

G

GA.	GAUGE
GALV.	GALVANIZE
G.B.	GRAB BAR
G.C.	GENERAL CONTRACTOR
GEN.	GENERAL
GL	GLASS
GR.	GRADE
GYP.	GYPSUM

H

H.	HIGH
H.B.	HOSE BIBB
H.C.	HOLLOW CORE
HC	HANDICAPPED
HD.	HEAD
HDW.	HARDWARE
HDWD.	HARDWOOD
H.M.	HOLLOW METAL
HORIZ.	HORIZONTAL
H.P.	HORSE POWER
HR	HOUR
HT.	HEIGHT
HVAC	HEATING VENTILATION AND AIR CONDITIONING
HOL.	HOLLOW

I

IN.	INCHES
INSUL.	INSULATION
INT.	INTERIOR

J

JAN.	JANITOR
J.F.	JOINT FILLER
JNT.	JOINT
JST.	JOIST

K

KIT.	KITCHEN

L

L.	LONG OR LENGTH
LAB.	LABORATORY
LAM.	LAMINATE
LAV.	LAVATORY
LBL.	LABEL
L.H.	LEFT HAND
LIN.	LINEN
L.L.V.	LONG LEG VERTICAL
LN.	LINE
L.P.	LOW POINT
LT.	LIGHT
LVR.	LOUVER

M

MAS.	MASONRY
MATL.	MATERIAL
MAX.	MAXIMUM
M.C.	MINERAL CORE
MECH.	MECHANICAL
MEMB.	MEMBRANE
MEZZ.	MEZZANINE
MFTR	MANUFACTURER
MGR.	MANAGER
M.H.	MANHOLE
MIN.	MINIMUM
MISC.	MISCELLANEOUS
MLDG.	MOLDING
MLWK.	MILLWORK
M.O.	MASONRY OPENING
M.R.	MOISTURE RESISTIVE
MRB.	MARBLE
M.T.	MARBLE THRESHOLD
MTD.	MOUNTED
MTL.	METAL
MULL.	MULLION

N

N	NORTH
N/A	NOT APPLICABLE
N.I.C.	NOT IN CONTRACT
NO.	NUMBER
NOM.	NOMINAL
N.T.S.	NOT TO SCALE

O

O.C.	ON CENTER
OD	OVERFLOW DRAIN
OH.	OVERHEAD
OPNG.	OPENING
OPP.	OPPOSITE

P

PART.	PARTITION
PH	PRE HUNG
PL.	PLATE
P.L.	PROPERTY LINE
P.LAM.	PLASTIC LAMINATE
PLAS.	PLASTER
PLYWD.	PLYWOOD
PNL.	PANEL
POL.	POLISHED
PR.	PAIR
PREC.	PRECAST
PREFAB.	PREFABRICATED
PROJ.	PROJECT
PROP.	PROPERTY
P.T.	PRESSURE TREATED
PTD.	PAINTED
PVC	POLYVINYL CHLORIDE
PVRS	PAVERS

Q

Q.T.	QUARRY TILE
QTY.	QUANTITY

R

R.	RISER
RAD.	RADIUS
R.B.	RUBBER BASE
RCP	REFLECTED CEILING PLAN
RD	ROOF DRAIN
RE	REFER TO...
REF.	REFRIGERATOR
REINF.	REINFORCED
REQD.	REQUIRED
REV.	REVISED / REVISION
RH	RIGHT HAND
RM	ROOM
R.O.	ROUGH OPENING

S

S	SOUTH
SAFB	SOUND ACOUSTICAL
BOARD	
S.C.	SOLID CORE
SCHED.	SCHEDULE
SECT.	SECTION
S.F.	SQUARE FOOT / FEET
SHLV/SH	SHELVING
SHT.	SHEET
SIM.	SIMILAR
SPEC.	SPECIFICATION
SQ.	SQUARE
SR	SEMI RECESSED
S.S.	STAINLESS STEEL
STAGG.	STAGGERED
STD.	STANDARD
STL.	STEEL
STN.	STAINED
STOR.	STORAGE
STRUCT.	STRUCTURAL
SUSP.	SUSPENDED
SYST.	SYSTEM

T

T	TREAD
T & G	TONGUE & GROOVE
TEMP.GL.	TEMPERED GLASS
TER	TERRAZZO
TH	THICK
T.O.	TOP OF
TOIL.	TOILET
TYP.	TYPICAL

U

U.O.N.	UNLESS OTHERWISE NOTED

V

VAR.	VARIES
V.B.	VINYL BASE
VCT.	VINYL COMPOSITION TILE
VER.	VERIFY
VERT.	VERTICAL
V.I.F.	VERIFY IN FIELD

W

W	WEST / WIDE
W/	WITH
W.C.	WATER CLOSET
W/D	WASHER/DRYER COMBO
WD.	WOOD
WP.	WATER PROOF
W.R.	WATER RESISTANT
W/O	WITHOUT
WWF	WELDED WIRE FABRIC

ISSUE HISTORY

No.	Date	Description
1	04/15/2022	PERMIT SUBMITTAL

REVISION HISTORY

No.	Date	Description

© 2015 These documents and their contents are the property of FUGLEBERG KOCH. Any reproductions, alterations, or modifications of these documents without the expressed written consent of Fugleberg Koch is prohibited by law.

FUGLEBERG KOCH
2555 Temple Trail, Winter Park, FL 32789 (407) 629-0595
www.fuglebergkoch.com AA26002103

CONSULTANT

STATE OF ALABAMA
MICHAEL E. GOVE
8234
4/15/22
REGISTERED ARCHITECT

MICHAEL GOVE
8234

THE ROBERT MADISON MADISON, ALABAMA	Drawn: MB Checked: JK Approval: MG Date: 04/15/2022 Project #: 5722

COVER SHEET

A0.01a

PLOTTED: 5/3/2022
3:16:25 PM

INDEX OF DRAWINGS

SHT #	SHEET NAME	REV. No.	DATE
00 - GENERAL			
A0.01a	COVER SHEET		04/15/2022
A0.01b	SHEET INDEX		04/15/2022
A0.02	CODE ANALYSIS		04/15/2022
A0.03	ACCESSIBLE DATA AND DETAILS		04/15/2022
A0.12	LIFE SAFETY PLANS - BUILDING TYPE B		04/15/2022
A0.13	LIFE SAFETY PLANS - BUILDING TYPE B		04/15/2022
A0.20	LIFE SAFETY PLANS - UNIT PLANS		04/15/2022
A0.21	LIFE SAFETY PLANS - UNIT PLANS		04/15/2022
A0.30	UL REFERENCE DIRECTORY WALL SYSTEMS		04/15/2022
A0.31	UL REFERENCE DIRECTORY ROOF SYSTEMS		04/15/2022
A0.32	UL REFERENCE DIRECTORY WALL SYSTEMS		04/15/2022
A0.33	UL REFERENCE DIRECTORY FLOOR SYSTEM		04/15/2022
A0.34	UL REFERENCE DIRECTORY FLOOR SYSTEMS		04/15/2022
A0.35	UL REFERENCE DIRECTORY ROOF SYSTEMS		04/15/2022
A0.36	UL REFERENCE DIRECTORY FLOOR PENETRATIONS		04/15/2022
A0.37	UL REFERENCE DIRECTORY PENETRATIONS		04/15/2022
00 - GENERAL: 16			
01 - CIVIL			
C0	COVER		
C1	EXISTING CONDITIONS & DEMOLITION PLAN		
C2	SITE PLAN		
C2.1	SITE PLAN		
C2.2	SITE PLAN		
C2.3	KEYNOTE PLAN		
C2.4	OVERALL SITE PLAN		
C3	WATER INFRASTRUCTURE PLAN		
C4.1	STORM INFRASTRUCTURE PLAN		
C4.2	STORM INFRASTRUCTURE PLAN		
C4.3	STORM INFRASTRUCTURE PROFILES		
C5	SANITARY SEWER PLAN & PROFILE		
C5.1	SANITARY SEWER PLAN & PROFILE		
C6	OVERALL GRADING PLAN		
C6.1	GRADING PLAN		
C6.2	GRADING PLAN		
C7	EROSION CONTROL PLAN		
C8	FIRE TRUCK ACCESS PLAN		
C9.1	CIVIL DETAILS		
C9.2	CIVIL DETAILS		
L1	PVA LANDSCAPE PLAN		
PL-1	PARKING LOT LIGHTING PLAN, NOTES AND LEGEND		
D1	PRE DEVELOPMENT DRAINAGE MAP		
D2	POST DEVELOPMENT DRAINAGE MAP		
01 - CIVIL: 24			
02 - ARCHITECTURAL			
A1.01	ARCHITECTURAL SITE PLAN		04/15/2022
A2.04	BUILDING TYPE B - GROUND & 2ND LEVEL PLANS		04/15/2022
A2.05	BUILDING TYPE B - 3RD & 4TH LEVEL PLANS		04/15/2022
A2.06	BUILDING TYPE B - ROOF PLAN		04/15/2022
A2.19	BLDG B - ENLARGED GARAGE PLAN		04/15/2022
A2.22	BUILDING TYPE B - CORRIDOR RCP		04/15/2022
A3.01	UNIT 1A - 1BR. UNIT PLAN		04/15/2022
A3.02	UNIT 1B - 1BR. UNIT PLAN		04/15/2022
A3.03	UNIT 1Bs - 1BR. UNIT PLAN		04/15/2022
A3.04	UNIT 2B - 2BR. UNIT PLAN		04/15/2022
A3.04a	UNIT 2B - 2BR. UNIT PLAN		04/15/2022
A3.05	UNIT 2Bs - 2BR. UNIT PLAN		04/15/2022
A3.06	UNIT 2C - 2BR. UNIT PLAN		04/15/2022
A3.06a	UNIT 2B - 2BR. UNIT PLAN		04/15/2022
A3.07	UNIT 3C - 3BR. UNIT PLAN		04/15/2022
A3.07a	UNIT 3C - 3BR. UNIT PLAN		04/15/2022
A3.08	UNIT 3C - RCP		04/15/2022
A3.22	KITCHEN, BATH AND LAUNDRY REQUIREMENTS		04/15/2022
A3.31	STAIR SECTION DETAILS		04/15/2022
A3.32	ELEVATOR ENLARGED PLAN, SECTION AND DETAILS		04/15/2022
A3.33	BUILDING TYPE B - STAIR PLANS, SECTIONS AND ANON.		04/15/2022
A4.02	BUILDING TYPE B - EXTERIOR ELEVATIONS		04/15/2022
A4.04	ENLARTGED PATIO/BALCONY ELEVATIONS		04/15/2022
A4.11	BUILDING TYPE B - AXONOMETRICS		04/15/2022
A4.52	BUILDING TYPE B - SECTIONS		04/15/2022
A5.01	WALL SECTION DETAILS		04/15/2022
A5.02	WALL SECTION DETAILS		04/15/2022
A5.03	WALL SECTION DETAILS		04/15/2022
A5.04	ROOF DETAILS		04/15/2022
A5.05	MISCELLANEOUS DETAILS		04/15/2022
A5.06	PENETRATION AND FLASHING DETAILS		04/15/2022
A6.01	PLAN DETAILS		04/15/2022
A7.01	DOOR SCHEDULE AND DETAILS		04/15/2022
A7.02	DOOR DETAILS		04/15/2022
A7.03	WINDOW SCHEDULE		04/15/2022
A7.04	WINDOW AND DOOR TAPING PROCEDURES		04/15/2022
02 - ARCHITECTURAL: 36			

INDEX OF DRAWINGS

SHT #	SHEET NAME	REV. No.	DATE
03 - STRUCTURAL			
S0.01	GENERAL NOTES BLDG TYPES A, B & C		04/15/2022
S0.02	GENERAL NOTES BLDG TYPES A, B & C		04/15/2022
S2.01	BUILDING TYPE B FOUNDATION PLAN		04/15/2022
S2.02	BULDING TYPE B 2ND FLOOR FRAMING PLAN		04/15/2022
S2.03	BUILDING TYPE B 3RD FLOOR FRAMING PLAN		04/15/2022
S2.04	BUILDING TYPE B 4TH FRAMING PLAN		04/15/2022
S2.05	BUILDING TYPE B ROOF FRAMING PLAN		04/15/2022
S5.00	SECTION AND DETAILS BLDG TYPES A, B & C		04/15/2022
S5.01	SECTION AND DETAILS BLDG TYPES A, B & C		04/15/2022
S5.02	SECTION AND DETAILS BLDG TYPES A, B & C		04/15/2022
S5.03	SECTION AND DETAILS BLDG TYPES A, B & C		04/15/2022
S5.04	SECTION AND DETAILS BLDG TYPES A, B & C		04/15/2022
S5.05	SECTION AND DETAILS BLDG TYPES A, B & C		04/15/2022
03 - STRUCTURAL: 13			
04 - MECHANICAL			
M0.01	SYMBOL LEGEND & GENERAL NOTES MECHANICAL		04/15/2022
M2.04	BUILDING TYPE B GROUND & 2ND FLOOR LEVEL MECHANICAL		04/15/2022
M2.05	BUILDING TYPE B 3RD & 4TH LEVEL MECHANICAL		04/15/2022
M2.06	BUILDING TYPE B ROOF PLAN MECHANICAL		04/15/2022
M3.01	ENLARGED UNIT PLANS MECHANICAL		04/15/2022
M3.02	ENLARGED UNIT PLANS MECHANICAL		04/15/2022
M3.05	ENLARGED UNIT PLANS MECHANICAL		04/15/2022
M3.06	ENLARGED UNIT PLANS MECHANICAL		04/15/2022
M5.01	SCHEDULES MECHANICAL		04/15/2022
M5.03	SCHEDULES MECHANICAL		04/15/2022
M6.01	DETAILS MECHANICAL		04/15/2022
M6.02	DETAILS MECHANICAL		04/15/2022
M6.03	DETAILS MECHANICAL		04/15/2022
M6.04	DETAILS MECHANICAL		04/15/2022
M6.05	DETAILS MECHANICAL		04/15/2022
M6.06	DETAILS MECHANICAL		04/15/2022
M7.02	ENERGY CALCULATIONS MECHANCIAL		04/15/2022
04 - MECHANICAL: 17			
05 - ELECTRICAL			
E0.01	SYMBOL LEGEND & GENERAL NOTES ELECTRICAL		04/15/2022
E2.04	BUILDING TYPE B GROUND & 2ND LEVEL LIGHTING		04/15/2022
E2.04A	BUILDING TYPE B GROUND & 2ND LEVEL LIGHTING		04/15/2022
E2.05	BUILDING TYPE B 3RD & 4TH LEVEL POWER & SYSTEMS		04/15/2022
E2.05A	BUILDING TYPE A 3RD & 4TH LEVEL LIGHTING		04/15/2022
E2.06	BUILDING TYPE A ROOF PLAN ELECTRICAL		04/15/2022
E3.01	ENLARGED UNIT PLANS ELECTRICAL		04/15/2022
E3.02	ENLARGED UNIT PLANS ELECTRICAL		04/15/2022
E3.05	ENLARGED UNIT PLANS ELECTRICAL		04/15/2022
E3.06	ENLARGED UNIT PLANS ELECTRICAL		04/15/2022
E3.07	ENLARGED UNIT PLANS ELECTRICAL		04/15/2022
E3.09	ENLARGED ELEVATOR PLANS ELECTRICAL		04/15/2022
E4.02	RISER DIAGRAM ELECTRICAL		04/15/2022
E5.01	SCHEDULES ELECTRICAL		04/15/2022
E5.02	SCHEDULES ELECTRICAL		04/15/2022
E6.01	DETAILS ELECTRICAL		04/15/2022
E7.01	SPECIFICATIONS ELECTRICAL		04/15/2022
05 - ELECTRICAL: 17			
06 - PLUMBING			
P0.01	SYMBOL LEGEND & GENERAL NOTES PLUMBING		04/15/2022
P2.04	BUILDING TYPE B GROUND & 2ND LEVEL PLUMBING		04/15/2022
P2.05	BUILDING TYPE B 3RD & 4TH LEVEL PLUMBING		04/15/2022
P2.06	BUILDING TYPE B ROOF PLAN PLUMBING		04/15/2022
P3.01	ENLARGED UNIT PLANS PLUMBING		04/15/2022
P3.02	ENLARGED UNIT PLANS PLUMBING		04/15/2022
P3.05	ENLARGED UNIT PLANS PLUMBING		04/15/2022
P3.06	ENLARGED UNIT PLANS PLUMBING		04/15/2022
P3.07	ENLARGED UNIT PLANS PLUMBING		04/15/2022
P4.01	RISER DIAGRAMS PLUMBING		04/15/2022
P5.01	APARTMENT SCHEDULE & DETAIL PLUMBING		04/15/2022
P5.02	APARTMENT SCHEDULE & DETAIL PLUMBING		04/15/2022
P5.03	APARTMENT SCHEDULE & DETAIL PLUMBING		04/15/2022
06 - PLUMBING: 13			
GRAND TOTAL : 136			

ISSUE HISTORY

No.	Date	Description
1	04/15/2022	PERMIT SUBMITTAL

REVISION HISTORY

No.	Date	Description

FUGLEBERG KOCH

2555 Temple Trail, Winter Park, FL 32789 *(407) 629-0595*
www. fuglebergkoch.com *AA26002103*

CONSULTANT

STATE OF ALABAMA
MICHAEL E. GOVE
8234
4/15/22
REGISTERED ARCHITECT

MICHAEL GOVE
8234

THE ROBERT MADISON

MADISON, ALABAMA

Drawn:	MB
Checked:	JK
Approval:	MG
Date:	04/15/2022
Project #:	5722

SHEET INDEX

A0.01b

PLOTTED: 5/4/2022
6:08:40 PM

© 2019 These documents and their contents are the property of FUGLEBERG KOCH - AA26002103, and are issued only for the specific project noted on these drawings. Any reproductions, extensions, or modifications of these documents without the expressed written consent of Fugleberg Koch is prohibited by law.

BUILDING CODE ANALYSIS - INTERNATIONAL BUILDING CODE, 2018 EDITION - BUILDING TYPE A & B

CODE SUMMARY

APPLICABLE CODES

1. BUILDING CODE: 2018 INTERNATIONAL BUILDING CODE
2. LIFE SAFETY CODE: 2018 NFPA 101
3. PLUMBING CODE: 2018 INTERNATIONAL PLUMBING CODE
4. ENERGY CODE: 2018 INTERNATIONAL ENERGY CONSERVATION CODE AND AMMENDMENTS
5. FIRE CODE: 2018 INTERNATIONAL FIRE CODE
6. ICC/ANSI ACCESSIBILITY CODE: 2009 ACCESSIBLE AND USABLE BUILDING AND FACILITIES (AS REFERENCED IN 2018 IBC).
7. ELECTRICAL CODE: 2017 NATIONAL ELECTRIC CODE
8. MECHANICAL CODE: 2018 INTERNATIONAL MECHANICAL CODE
9. NFPA 70, STANDARD FOR PORTABLE FIRE EXTINGUISHERS, 2017 ED.
10. NFPA 13R, STANDARD FOR INSTALLATION OF SPRINKLER SYSTEMS IN RESIDENTIAL OCCUPANCIES UP TO, AND INCLUDING FOUR STORIES IN HEIGHT, 2012 EDITION.

GENERAL CODE PARAMETERS

APARTMENTS

DESCRIPTION	REQUIRED OR ALLOWABLE	THIS PROJECT	REFERENCE	REMARKS
WIND SPEED	105 MPH	105 MPH	SEC. 1609	ULTIMATE
SEISMIC ZONE	B	B	SEC. 1613	
SNOW LOAD	10	10	SEC. 1608	
FROST DEPTH	18	18	SEC 1805.2.1	

COMPONENTS AND CLADDING PRESSURES:(NET, SEE PRESSURE ZONE DETAILS ON STRUCTURAL DRAWINGS)

FIRE-RESISTANCE RATING REQUIREMENTS (PER TABLE 601)

APARTMENTS - TYPE V(A)

	V(A)	
	REQ'D	PROV
STRUCTURAL FRAME: INCLUDING COLUMNS, GIRDERS, TRUSSES	1	1
BEARING WALLS: EXTERIOR (PER TABLE 601/602/704.10)	1	1
INTERIOR	1	1*
NONBEARING WALLS AND PARTITIONS: EXTERIOR (PER TABLE 601/602)	0	0
INTERIOR (PER SECTION 601)	0	0
FLOOR CONSTRUCTION. NOT INCLUDING SUPPORTING BEAMS AND JOISTS PER EXCEPTION 2 of 7.12.4	1	1*
ROOF CONSTRUCTION	1	1*
SEPARATION DISTANCE (PER TABLE 602) X' ≥ 30'	0	0

* SEE CODE PARAMETERS TABLE BELOW AND LIFE-SAFETY SHEETS FOR ADDITIONAL INFORMATION

BALCONIES

705.2.3.1 Balconies and similar projections.
Balconies and similar projections of combustible construction other than *fire-retardant-treafed wood* shall be fire-resistance rated in accordance with Table 601 for floor construction or shall be of heavy timber construction in accordance with Section 2304.11. The aggregate length of the projections shall not exceed 50 percent of the buildings perimeter on each floor.

Exceptions:
3. Balconies and similar projections on buildings of Type III, IV and V construction shall be permitted to be of Type V construction, and shall not be required to have a *fire-resistance rating* where sprinkler protection is extended to these areas.
4. Where sprinkler protection is extended to the balcony areas, the aggregate length of the balcony on each floor shall not be limited.

BUILDING CODE PARAMETERS - [IBC 2018]

DESCRIPTION	REQUIRED (Chapter 5)	BUILDING AREA MODIFICATION (Chapter 5)	THIS PROJECT BUILDING TYPE A	THIS PROJECT BUILDING TYPE B	REMARKS	REFERENCE (IBC)
CONSTRUCTION TYPE	TYPE V(A)	TYPE V(A)	TYPE V(A)	TYPE V(A)		TABLE 504.3
USE / OCCUPANCY			R-2	R-2		CH. 3 & 4
FIRE RATING	1 HR		1 HR	1 HR		CH. 6
OCUPANCY SEPARATION	1/2 HR	1/2 HR	1/2 HR	1/2 HR		508.3.3 & 708.3
SPRINKLER	NFPA 13R	NFPA 13R	NFPA 13R	NFPA 13R		903.3.1.2
LEVEL 1	12,000 SF		14,769 SF	13,042 SF		TABLE 506.2
LEVEL 2	12,000 SF		14,769 SF	13,042 SF		TABLE 506.2
LEVEL 3	12,000 SF		14,769 SF	13,042 SF		TABLE 506.2
LEVEL 4	12,000 SF	17,250 SF	14,769 SF	13,042 SF		TABLE 506.2
TOTAL BUILDING AREA	48,000 SF	69,000 SF	**59, 076 SF**	**51,552 SF**		NOTE 3: IBC S. 505.2
						TABLE 506.2
MEZZ/LOFT INCI.	--		NO	NO		NOTE 3: IBC S. 505.2
HEIGHT LIMIT ($)	4 STORIES		4 STORIES	4 STORIES		NOTE 3: IBC S. 504.4
HEIGHT LIMIT.PROVIDED (FT)	60'-0"		55' - 8"	55' - 8"		TABLE 504.3
OCCUPANT LOAD	200 GROSS		308 PEOPLE	214 PEOPLE		TABLE 1004.5
MIN No. OF EXITS	2		3	3		SECTION 1006
MIN. STAIR WIDTH	44 INCHES		44 INCHES	44 INCHES		SECTION 1005 / 1009.1

INSULATION AND FENESTRATION REQUIREMENTS BY COMPONENT (INTERNATIONAL ENERGY CONSERVATION CODE 2018 - TABLE 402.1.3)

CLIMATE ZONE	FENESTRATION U-FACTOR	SKYLIGHT U-FACTOR	GLAZED FENESTRATION SHGC	CEILING R-VALUE	WOOD FRAME WALL R-VALUE	MASS FRAME WALL R-VALUE	FLOOR R-VALUE	BASEMENT WALL R-VALUE	SLAB R-VALUE & DEPTH	CRAWL SPACE WALL R-VALUE
3A	0.50	0.55	0.25	38	20	N/A	19	N/A	N/A	N/A
PROVIDED	40	N/A	0.25	38	21	N/A	19	N/A	N/A	N/A

MEANS OF EGRESS - [IBC TABLE 1006.2.1 & NFPA]

OCCUPANCY CLASSIFICATION	LOCATION	MAX. TRAVEL DISTANCE TO EXIT (ALLOWABLE) UNSPRINK.	SPRINK.	MAX. TRAVEL DISTANCE (ACTUAL)	REMARKS
R-2 - DWELLING	BUILDING #1	NP	125	48'-0"	
R-2 - COMMON PATH	BUILDING #1	150	200	BLDG A: 119'-0"	
				BLDG B: 101'-4"	

1) See Life Safety Plans for specific information.

2) Section 1007.1.1 Two Exits:
Exception 1: Where *exit enclosures* are provided as a portion of the required *exit* and are interconnected by a 1-hour fire-resistance-rated *corridor* conforming to the requirements of Section 1018, the required *exit* separation shall be measured along the shortest direct line of travel within the *corridor*.
Exception 2: Where a building is equipped throughout with an *automatic sprinkler system* in accordance with Section 903.3.1.1 or 903.3.1.2, the separation distance of the *exit* doors or *exit access doorways* shall not be less than one-third of the length of the maximum overall diagonal dimension of the area served.

MAXIMUM AREA OF EXTERIOR WALL OPENINGS:

FROM TABLE 705.8 - [IBC 2018: BUILDING]

ASSUMED PROPERTY LINE DISTANCE:	ALLOWABLE	ACTUAL (WORST CASE)
UNPROTECTED, $PRINKLERED (UP, $)		
0 FT TO 3 FT	NP	NP
OVER 3 FT TO 5 FT	15%	--
OVER 5 FT TO 10 FT	25%	21.8%
OVER 10 FT TO 15 FT	45%	33%
OVER 15 FT TO 20 FT	75%	--
OVER 20 FT TO 25 FT	**NL**	**NL**
OVER 25 FT TO 30 FT	NL	NL
OVER 30' FROM ASSUMED PROPERTY LINE	NR	NR

RESIDENTIAL	HUD FAIR HOUSING ACT ALL GROUND FLOOR UNITS
	IBC, 2018 - CHAPTER 11 ANSI TYPE "A" ALL GROUND FLOOR UNITS ANSI TYPE "A" 2% OF TOTAL UNITS = 2 GROUND FLOOR UNITS REFER TO ARCHITECTURAL SITE PLAN FOR LOCATIONS
GARAGES	IBC, 2018 - CHAPTER 11 2% OF TOTAL UNITS GARAGE SPACE = 1 SPACES. REFER TO ARCHITECTURAL SITE PLAN FOR LOCATIONS

TABLE 402.4.2 AIR BARRIER AND INSULATION INSPECTION COMPONENT CRITERIA

COMPONENT	CRITERIA
Air barrier and thermal barrier	Exterior thermal envelope insulation for framed walls is installed in substantial contact and continuous alignment with building envelope air barrier. Breaks or joints in the air barrier are filled or repaired. Air-permeable insulation is not used as a sealing material. Air-permeable insulation is inside of an air barrier.
Ceiling/attic	Air barrier in any dropped ceiling/soffit is substantially aligned with insulation and any gaps are sealed. Attic access (except unvented attic), knee wall door, or drop down stair is sealed.
Walls	Corners and headers are insulated. Junction of foundation and sill plate is sealed.
Windows and doors	Space between window/door jambs and framing is sealed.
Rim joists	Rim joists are insulated and include an air barrier.
Floors (including above-garage and cantilevered floors)	Insulation is installed to maintain permanent contact with underside of subfloor decking. Air barrier is installed at any exposed edge of insulation.
Crawl space walls	Insulation is permanently attached to walls. Exposed earth in unvented crawl spaces is covered with Class I vapor retarder with overlapping joints taped.
Shafts, penetrations	Duct shafts, utility penetrations, knee walls and flue shafts opening to exterior or unconditioned space are sealed.
Narrow cavities	Batts in narrow cavities are cut to fit, or narrow cavities are filled by sprayed/blown insulation.
Garage separation	Air sealing is provided between the garage and conditioned spaces.
Recessed lighting	Recessed light fixtures are air tight, IC rated, and sealed to drywall. Exception-fixtures in conditioned space.
Plumbing and wiring	Insulation is placed between outside and pipes. Batt insulation is cut to fit around wiring and plumbing, or sprayed/blown insulation extends behind piping and wiring.
Shower/tub on exterior wall	Showers and tubs on exterior walls have insulation and an air barrier separating them from the exterior wall.
Electrical/phone box on exterior walls	Air barrier extends behind boxes or air sealed-type boxes are installed.
Common wall	Air barrier is installed in common wall between dwelling units.
HVAC register boots	HVAC register boots that penetrate building envelope are sealed to subfloor or drywall.
Fireplace	Fireplace walls include an air barrier.

NOTES:
1) OCCUPANCY SEPARATION AT DWELLING UNITS PER SECTION 439 -> 709 (VERTICAL-WALLS) & 712 (HORIZONTAL-FLOORS) = 1 HR

2) HALLWAY = 0.2 x 40 OCCUPANTS = 8" < 44" (MIN. WIDTH)
TABLE 1020.2
STAIRS = 0.3 x 40 OCCUPANTS = 12" < 44" (MIN. WIDTH)
1011.2 Exception 1: *Stairways* serving an *occupant load* of less than 50 shall have a width of not less than 36 inches (914 mm).

3) 505.2 Mezzanines. A mezzanine or mezzanines in compliance with Section 505.2 shall be considered a portion of the story below. Such mezzanines shall not contribute to either the building area or number of stories as regulated by Section 503.1. The area of the mezzanins shall be included in determining the fire area. The clear height aboe and blecw the mezzanin floor construction shall be not less than 7 feet.

UNIT MATRIX

DESCRIPTION	3C	2C	2B	2Bs	1B	1Bs	1A	UNITS w/ SHOWERS	TOTAL
BUILDING TYPE A (x 3)									
LEVEL 1	0	4	4	0	0	0	0	8	8
LEVEL 2	0	4	4	0	0	4	1	13	13
LEVEL 3	0	4	4	0	0	4	1	13	13
LEVEL 4	0	4	4	0	0	4	1	13	13
TOTAL	0 (x3)	16 (x3)	16 (x3)	0 (x3)	0 (x3)	12 (x3)	3 (x3)	47 (x3)	47 (x 3) = 141
BUILDING TYPE B (x 3)									
LEVEL 1	2	2	0	0	4	0	0	8	8
LEVEL 2	2	2	0	2	4	0	1	11	11
LEVEL 3	2	2	0	2	4	0	1	11	11
LEVEL 4	2	2	0	2	4	0	1	11	11
TOTAL	8 (x3)	8 (x3)	0 (x3)	6 (x3)	16 (x3)	0 (x3)	3 (x3)	32 (x2)	41 (x3) = 123
TOTAL UNITS	24	72	48	18	48	36	18		264
% OF MIX	36.4 %		25 %		31.8 %		6.8 %		

BUILDING AREA MODIFICATION

APARTMENTS (SEE BUILDING AREA SCHEDULE ABOVE)

GROSS AREA TABULATION -

Bldg Type A: 58,176 SF = MAX FLOOR CHECK OK
F = 221' + 221' + 75.4' + 75.4' = 592.8'

Increase due to Frontage (506.3 Frontage Increase)
W=(L1 x w1 + L2 x w2 + L3 x w3 + L4 w4)/F
W=(221' x 30' + 221' x 30' + 75.4' x 30' + 75.4' x 30')/592.8'
W= 30

If = [(F/P) - .25] (30/30)
= [(592.8'/592.8') - .25] (30/30)
= [1- .25] (30/30)
= .75

Maximum Building Area Check
IF TYPE V-A:

Aa= [At + (NS x If)
Aa=[12,000 + (7,000 x .75)
=[12,000 + 5,250]
= 17,250 allowed max per story

17,250 x 4 stories = 69,000 allowed per building

Bldg Type B: 51,552 SF = MAX FLOOR CHECK OK
F = 198' + 198' + 74.9' + 74.9' = 545.8'

Increase due to Frontage (506.3 Frontage Increase)
W=(L1 x w1 + L2 x w2 + L3 x w3 + L4 w4)/F
W=(198' x 30' + 198' x 30' + 74.9'+ x 30' + 74.9' x 30')/545.8'
W= 30

If = [(F/P) - .25] (30/30)
= [(545.8'/545.8') - .25] (30/30)
= [1- .25] (30/30)
= .75

Maximum Building Area Check
IF TYPE V-A:

Aa= [At + (NS x If)
Aa=[12,000 + (7,000 x .75)
=[12,000 + 5,250]
= 17,250 allowed max per story

17,250 x 4 stories = 69,000 allowed per building

INTERIOR FINISH CLASSIFICATION

PER IBC 2018 SECTION 803.1.2 & TABLE 803.13, ALL ROOMS AND ENCLOSED SPACES SHALL BE OF A CLASS C FINISH.

PER NFPA 101 SECTION 10.2, TABLE 10.2.2, ALL NEW APARTMENT EXIT ACCESS CORRIDORS ARE FINISH CLASS C AND ALL EXITS ARE FINISH CLASS C. ALL FLOOR FINISH AS SCHEDULEDES TO BE PER SECTION 804.

ALL INTERIOR FINISHES SHALL ALSO COMPLY WITH IBC 2018 SECTION 806.

ISSUE HISTORY

No.	Date	Description
1	04/15/2022	PERMIT SUBMITTAL

REVISION HISTORY

No.	Date	Description

FUGLEBERG KOCH
2555 Temple Trail, Winter Park, FL 32789 (407) 629-0595
www. fuglebergkoch.com AA26002103

CONSULTANT

STATE OF ALABAMA LICENSED PROFESSIONAL ARCHITECT 8234 4/15/22 REGISTERED ARCHITECT

MICHAEL GOVE
8234

THE ROBERT MADISON
MADISON, ALABAMA

Drawn:	MB
Checked:	JK
Approval:	MG
Date:	04/15/2022
Project #:	5722

CODE ANALYSIS

A0.02

PLOTTED: 5/3/2022 3:16:27 PM

© 2018 These documents and their contents are the property of FUGLEBERG KOCH - AA26002103. Any reproductions, versions, or modifications of these documents without the expressed written consent of Fugleberg Koch is prohibited by law.

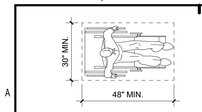

FIG. 305.3
SIZE OF CLEAR FLOOR SPACE

B1 CLR. FLR. SPACE
3/8" = 1'-0"

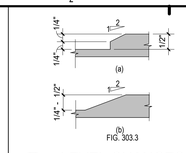

FIG. 303.3

B2 LEVEL CHANGES
6" = 1'-0"

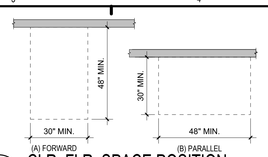

B3 CLR. FLR. SPACE POSITION
3/8" = 1'-0"

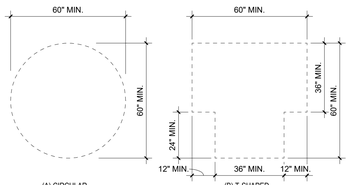

C1 SIZE OF TURNING SPACE
3/8" = 1'-0"

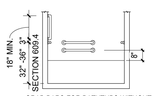

GRAB BARS FOR BATHTUBS WITHOUT PERMANENT SEATS - "ELEVATION"
FIG. 607.4.2

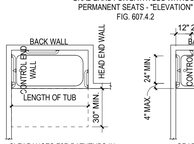

CLEARANCES FOR BATHTUBS IN TYPE 'A' UNITS WITHOUT PERMANENT SEAT
FIG. 1003.11.8

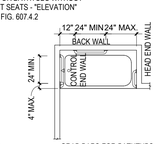

GRAB BARS FOR BATHTUBS WITHOUT PERMANENT SEATS - "PLAN"
FIG. 607.4.2

D3 ANSI TYPE "A"/FHA BATH
1/4" = 1'-0"

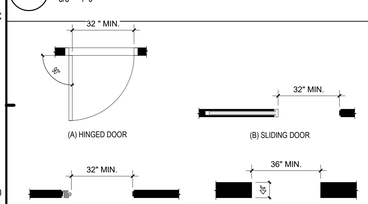

D6 CLEAR WIDTH OF DOORWAYS1
3/8" = 1'-0"

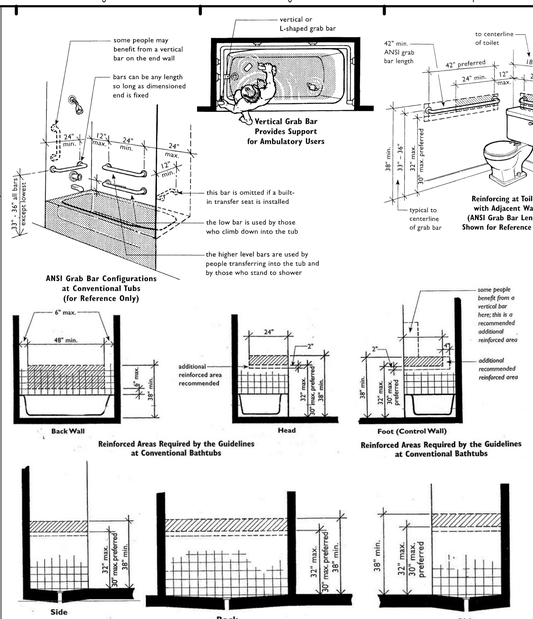

D5 GRAB BAR SIZE AND LOCATION
3/8" = 1'-0"

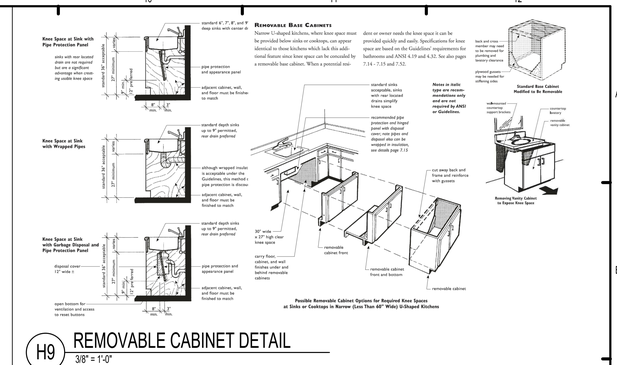

H9 REMOVABLE CABINET DETAIL
3/8" = 1'-0"

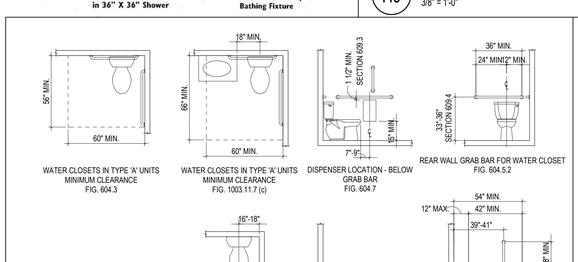

E9 ANSI TYPE "A"/FHA BATH @ TOILET
1/4" = 1'-0"

E10 ANSI TYPE "A"/FHA KITCHEN CLEARANCES
3/8" = 1'-0"

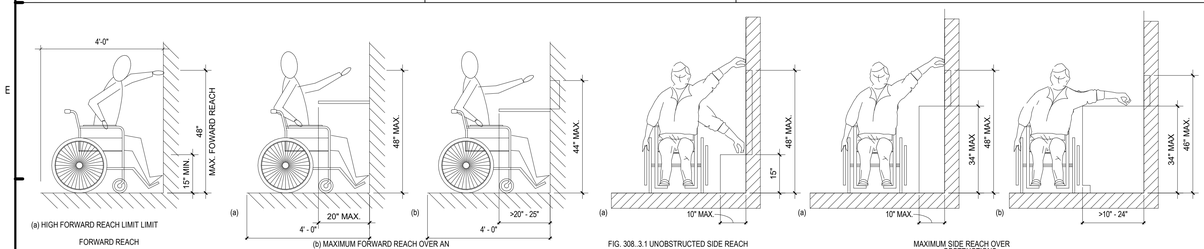

H1 REACH RANGES
1/2" = 1'-0"

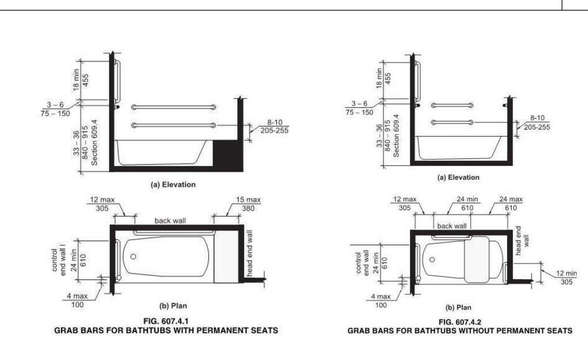

F3 GRAB BARS FOR BATHTUBS
3/8" = 1'-0"

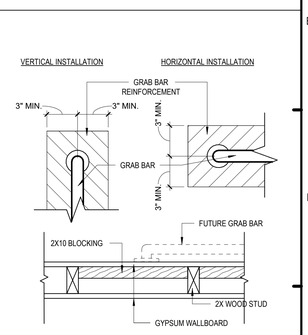

F4 GRAB BAR BLOCKING DET.1
1 1/2" = 1'-0"

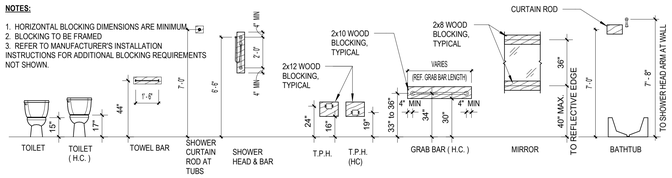

F1 MISC. BATH ELEVATIONS
1/4" = 1'-0"

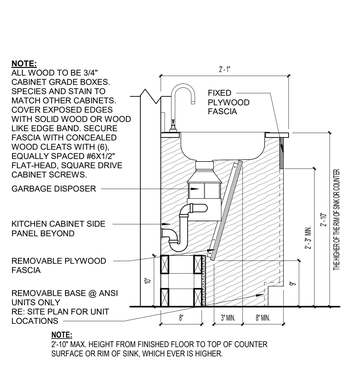

J2 OPEN CABINET DETAIL @ KITCHEN1
1" = 1'-0"

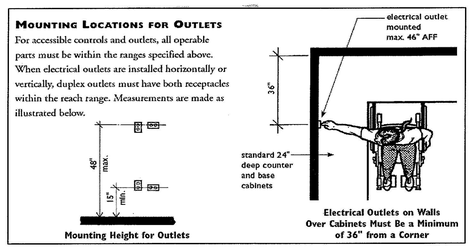

J3 TYPICAL MOUNTING HEIGHTS FOR OUTLETS
3/8" = 1'-0"

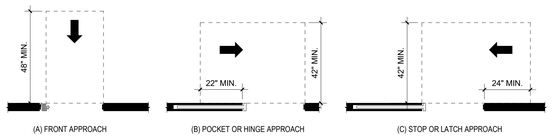

J1 MANEUVERING CLEARANCE AT SLIDING AND FOLDING DOORS1
3/8" = 1'-0"

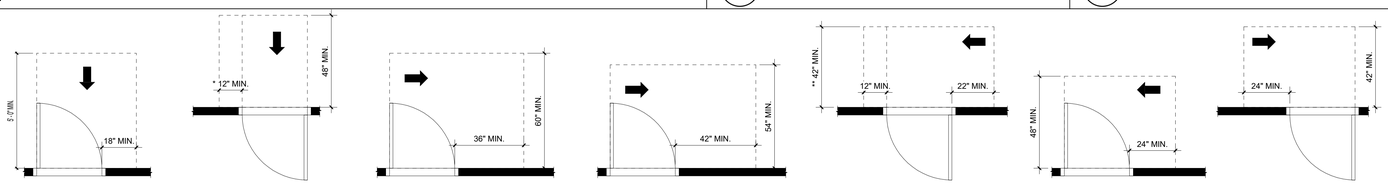

K2 MANEUVERING CLEARANCE AT MANUAL SWING DOORS1
3/8" = 1'-0"

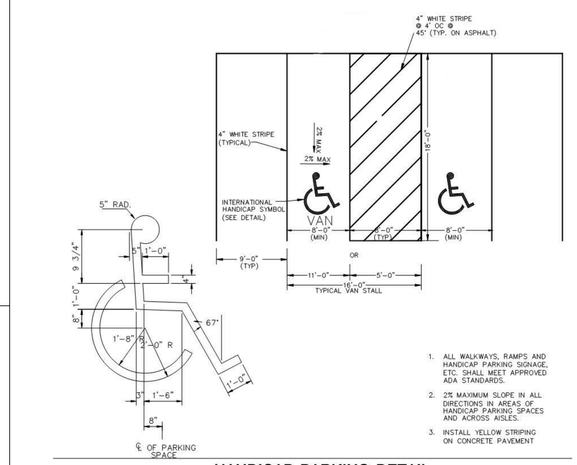

K1 ACCESSIBLE PARKING SPACE LAYOUT
1/4" = 1'-0"

ISSUE HISTORY

No.	Date	Description
1	04/15/2022	PERMIT SUBMITTAL

REVISION HISTORY

No.	Date	Description

FUGLEBERG KOCH
2555 Temple Trail, Winter Park, FL 32789 (407) 629-0595
www.fuglebergkoch.com AA26002103

CONSULTANT

STATE OF ALABAMA LICENSED PROFESSIONAL ENGINEER 8234 4/15/22 REGISTERED ARCHITECT

MICHAEL GOVE
8234

THE ROBERT MADISON MADISON, ALABAMA	Drawn: MB Checked: JK Approval: MG Date: 04/15/2022 Project #: 5722

ACCESSIBLE DATA AND DETAILS

A0.03

© 2018 These documents and their contents are the property of FUGLEBERG KOCH. Any reproduction, alteration, or modification of these documents without the expressed written consent of Fugleberg Koch is prohibited by law.

PLOTTED: 5/3/2022 3:16:34 PM

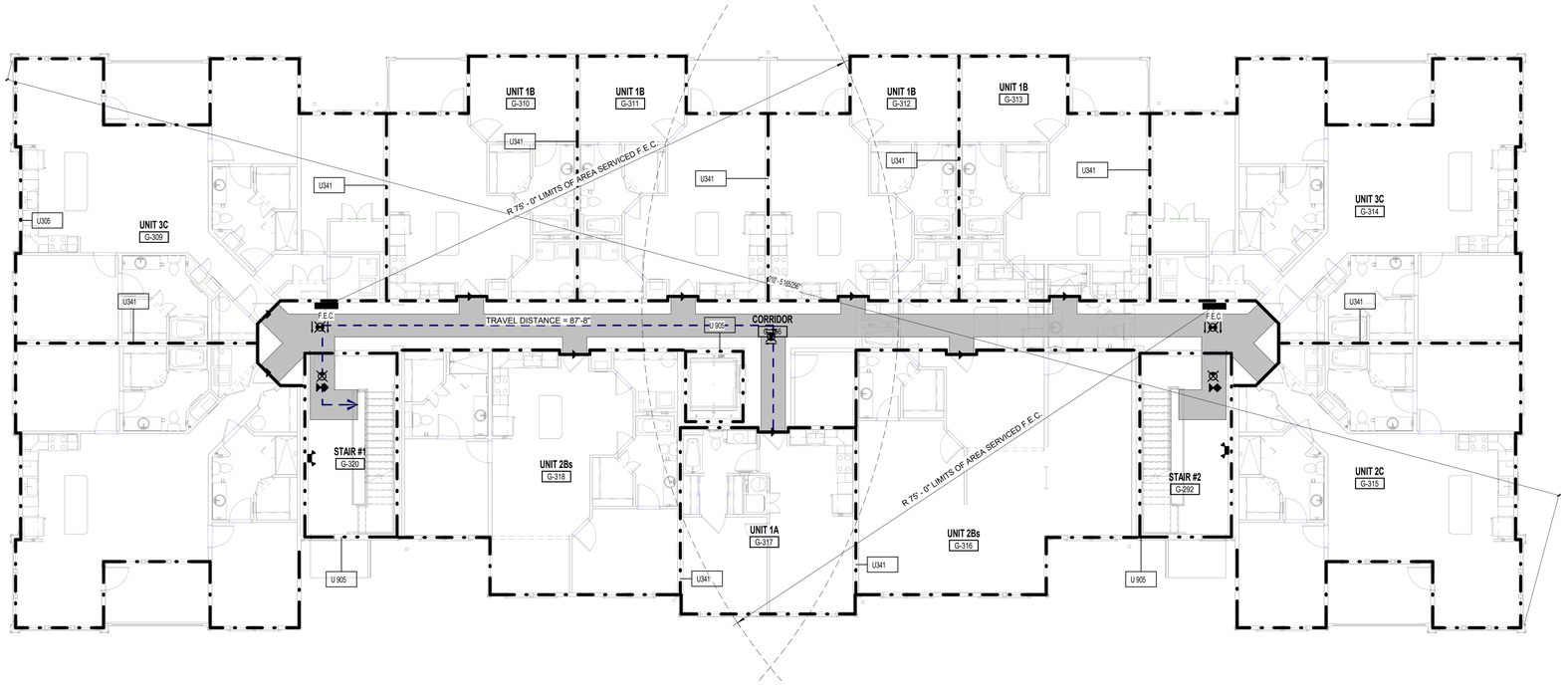

E1 BLDG TYPE B - LEVEL 2
1/8" = 1'-0"

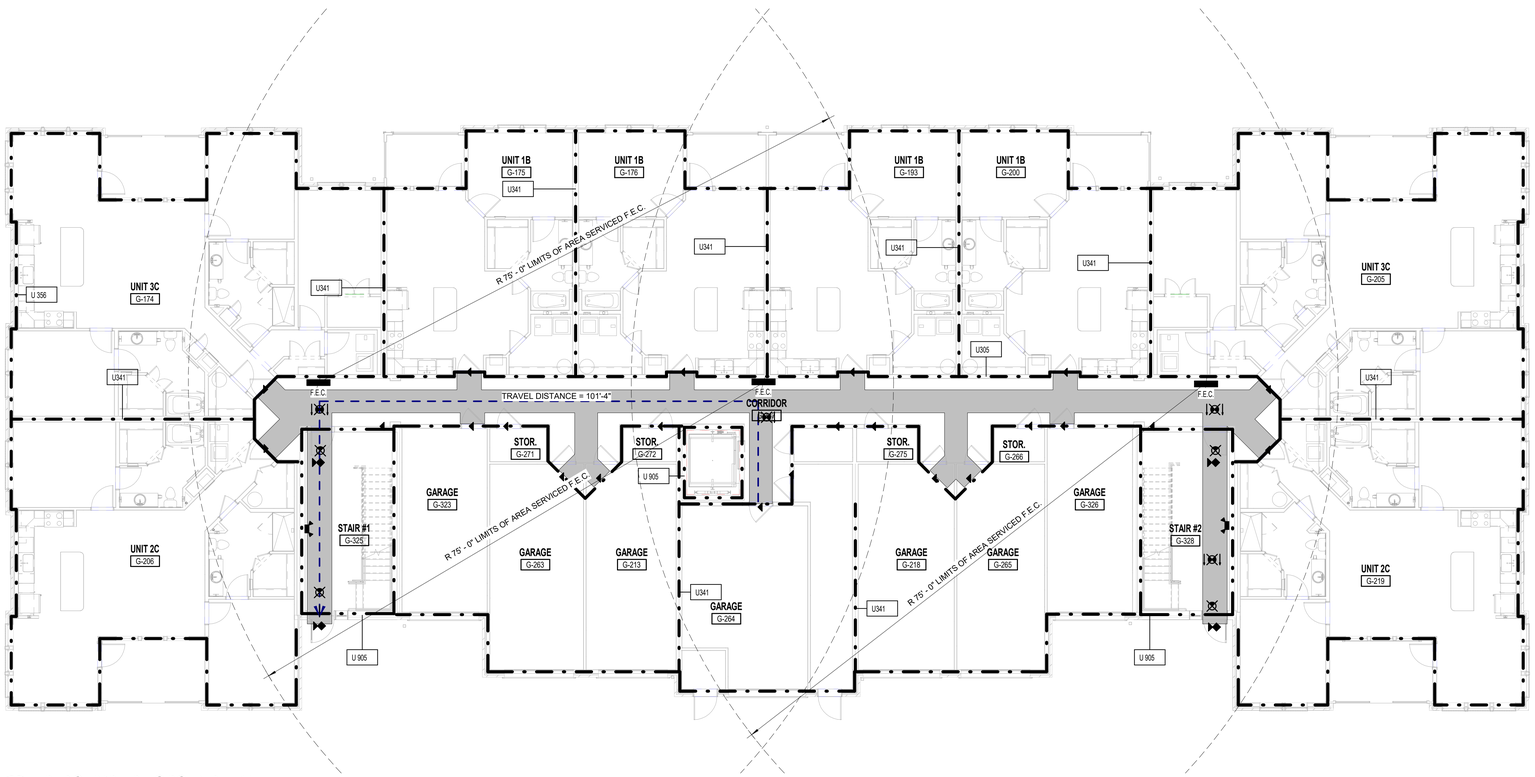

K1 BLDG TYPE B - GROUND LEVEL
1/8" = 1'-0"

ASSEMBLY SOUND RATINGS

WALL ASSEMBLY	STC RATINGS	IIC RATINGS	TEST # / STANDARD
U305	56	N/A	BW- 35ST 1969/ GEIGER AND HAMME
U341	58	N/A	TL- 93-270/ NRC - CNRC
U356	52	N/A	BW- 35ST 1969/ GEIGER AND HAMME
U336	60	N/A	BW- 35ST 1969/ GEIGER AND HAMME
HORIZONTAL ASSEMBLY	**STC RATINGS**	**IIC RATINGS**	**TEST # / STANDARD**
P522	60	50	RAL-TL-97-340 & RAL-IN- 97- 47/ USG LEVELROCK SOUND CONTROL
L528	60	50	RAL-TL-97-340 & RAL-IN- 97- 47/ USG LEVELROCK SOUND CONTROL
L574	54	50	RAL-TL-97-340 & RAL-IN- 97- 47/ USG LEVELROCK SOUND CONTROL

ASSEMBLY SOUND RATINGS
1/4" = 1'-0"

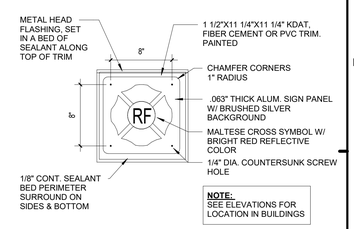

FIRE SIGN DETAIL 1
1 1/2" = 1'-0"

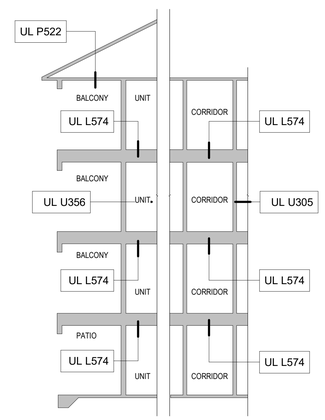

UL FLOOR/CEILING/ROOF ASSEMBLY
1/8" = 1'-0"

LIFE SAFETY LEGEND

NOTES:
1. ALL UNIT DOOR CAPACITY - 180 PERSONS
2. ALL EXIT DOOR COMMON AREA CAPACITY - 180 PERSONS EXCEPTION: GROUND FLOOR ENTRY LOBBY DOORS - 360 PERSONS
3. 36" WIDE ACCESSIBLE ROUTE REQUIRED PER FAIR HOUSING.
4. ALL DOORS ON ACCESSIBLE ROUTE TO HAVE A MINIMUM CLEARANCE OF 2'-8" (32").

- EXIT LIGHT
- EMERGENCY LIGHT
- TRAVEL DISTANCE TO EXIT
- F.E.C. — FIRE EXTINGUISHER VERIFY EXACT LOCATIONS AND TYPES WITH LOCAL FIRE OFFICIALS
- 20 MIN DOOR
- 45 MIN DOOR
- 60 MIN DOOR
- 90 MIN DOOR
- REQUIRED 1 HOUR FIRE SEPARATION
- REQUIRED 2 HOUR FIRE SEPARATION

ISSUE HISTORY

No.	Date	Description
1	04/15/2022	PERMIT SUBMITTAL

REVISION HISTORY

No.	Date	Description

FUGLEBERG KOCH
2555 Temple Trail, Winter Park, FL 32789 (407) 629-0595
www.fuglebergkoch.com AA26002103

CONSULTANT

STATE OF ALABAMA LICENSED PROFESSIONAL ARCHITECT 8234 4/15/22 REGISTERED ARCHITECT

MICHAEL GOVE
8234

THE ROBERT MADISON
MADISON, ALABAMA

Drawn:	MB
Checked:	JK
Approval:	MG
Date:	04/15/2022
Project #:	5722

LIFE SAFETY PLANS - BUILDING TYPE B

A0.12

PLOTTED: 5/3/2022 3:17:32 PM

© 2018 These documents and their contents are the property of FUGLEBERG KOCH - AA26002103. and are copyrighted by law. Any reproduction, reversion, or modification of these documents without the expressed written consent of Fugleberg Koch is prohibited by law.

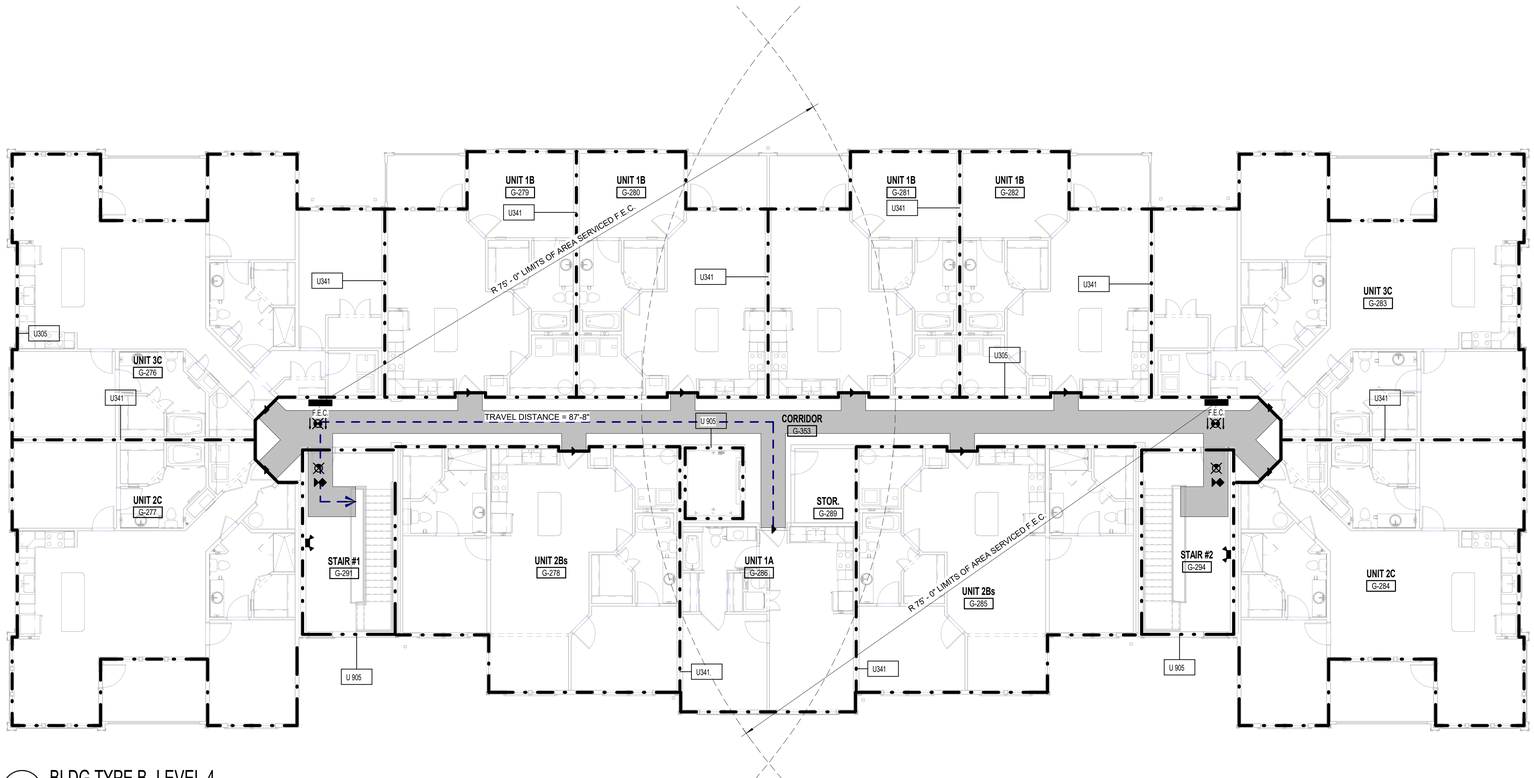

E1 BLDG TYPE B- LEVEL 4
1/8" = 1'-0"

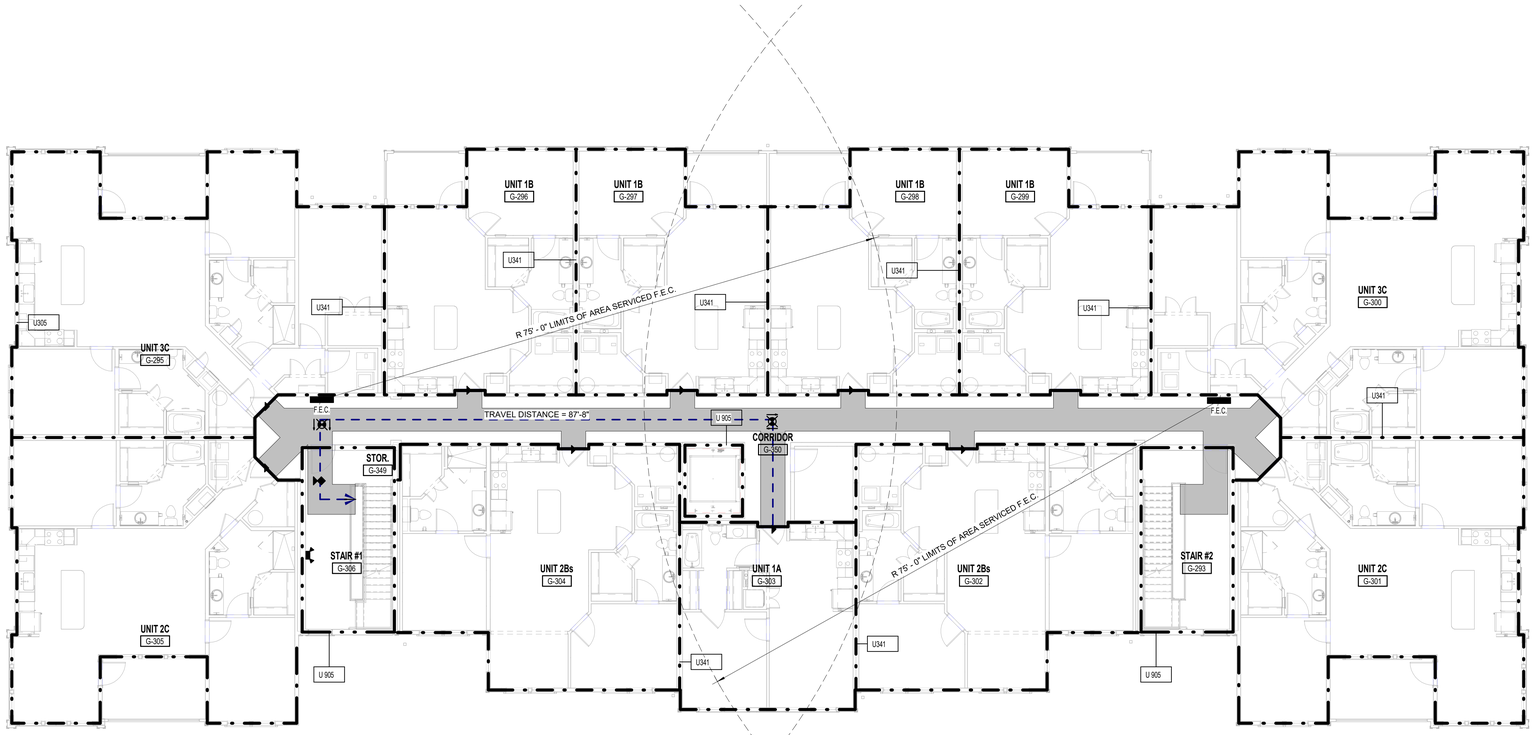

K1 BLDG TYPE B- LEVEL 3
1/8" = 1'-0"

ASSEMBLY SOUND RATINGS

WALL ASSEMBLY	STC RATINGS	IIC RATINGS	TEST # / STANDARD
U305	56	N/A	BW- 35ST 1969/ GEIGER AND HAMME
U341	58	N/A	TL- 93-270/ NRC - CNRC
U356	52	N/A	BW- 35ST 1969/ GEIGER AND HAMME
U336	60	N/A	BW- 35ST 1969/ GEIGER AND HAMME
HORIZONTAL ASSEMBLY	**STC RATINGS**	**IIC RATINGS**	**TEST # / STANDARD**
P522	60	50	RAL-TL-97-340 & RAL-IN- 97- 47/ USG LEVELROCK SOUND CONTROL
L528	60	50	RAL-TL-97-340 & RAL-IN- 97- 47/ USG LEVELROCK SOUND CONTROL
L574	54	50	RAL-TL-97-340 & RAL-IN- 97- 47/ USG LEVELROCK SOUND CONTROL

ASSEMBLY SOUND RATINGS
1/4" = 1'-0"

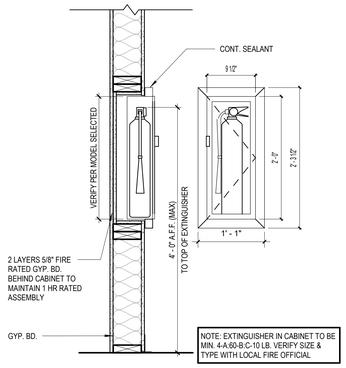

FIRE EXTINGUISHER CABINET
1" = 1'-0"

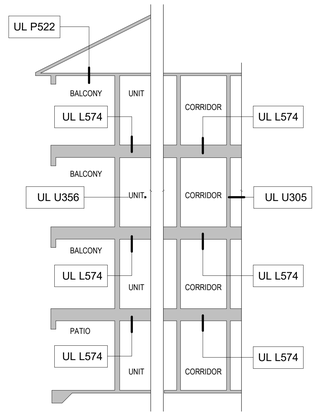

UL FLOOR/CEILING/ROOF ASSEMBLY
1/8" = 1'-0"

LIFE SAFETY LEGEND

NOTES:
1. ALL UNIT DOOR CAPACITY - 180 PERSONS
2. ALL EXIT DOOR COMMON AREA CAPACITY - 180 PERSONS EXCEPTION: GROUND FLOOR ENTRY LOBBY DOORS - 360 PERSONS
3. 36" WIDE ACCESSIBLE ROUTE REQUIRED PER FAIR HOUSING.
4. ALL DOORS ON ACCESSIBLE ROUTE TO HAVE A MINIMUM CLEARANCE OF 2'-8" (32").

- EXIT LIGHT
- EMERGENCY LIGHT
- TRAVEL DISTANCE TO EXIT
- F.E.C. — FIRE EXTINGUISHER VERIFY EXACT LOCATIONS AND TYPES WITH LOCAL FIRE OFFICIALS
- 20 MIN DOOR
- 45 MIN DOOR
- 60 MIN DOOR
- 90 MIN DOOR
- REQUIRED 1 HOUR FIRE SEPARATION
- REQUIRED 2 HOUR FIRE SEPARATION

ISSUE HISTORY

No.	Date	Description
1	04/15/2022	PERMIT SUBMITTAL

REVISION HISTORY

No.	Date	Description

© 2018 These documents and their contents are the property of FUGLEBERG KOCH ARCHITECTS, and are issued for the project noted on these drawings. Any reproduction, alteration, or modification of these documents without the expressed written consent of Fugleberg Koch is prohibited by law.

FUGLEBERG KOCH
2555 Temple Trail, Winter Park, FL 32789 (407) 629-9595
www. fuglebergkoch.com AA26002103

CONSULTANT

STATE OF ALABAMA LICENSED PROFESSIONAL ENGINEER 8234 4/15/22 REGISTERED ARCHITECT
MICHAEL GOVE
8234

THE ROBERT MADISON
MADISON, ALABAMA

Drawn:	MB
Checked:	JK
Approval:	MG
Date:	04/15/2022
Project #:	5722

LIFE SAFETY PLANS - BUILDING TYPE B

A0.13

PLOTTED: 5/3/2022 3:17:52 PM

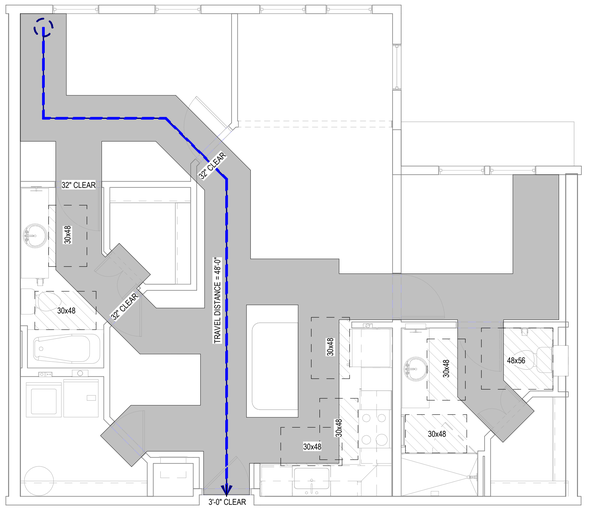

J1 UNIT 2BS -LIFE SAFETY PLAN
1/4" = 1'-0"

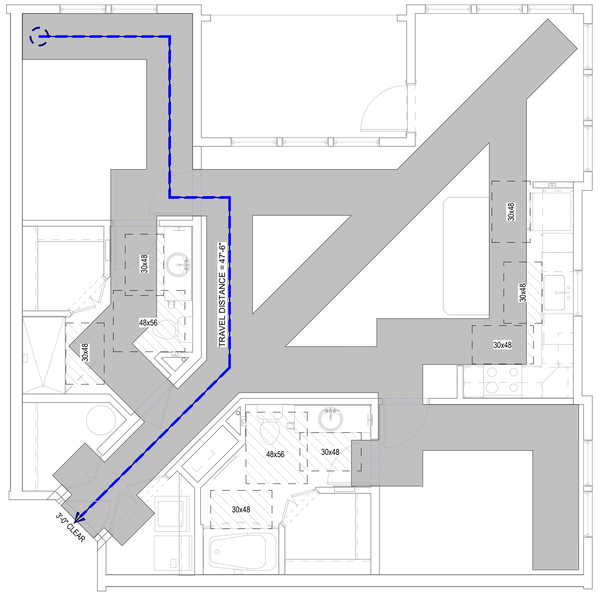

J2 UNIT 2C -LIFE SAFETY PLAN
1/4" = 1'-0"

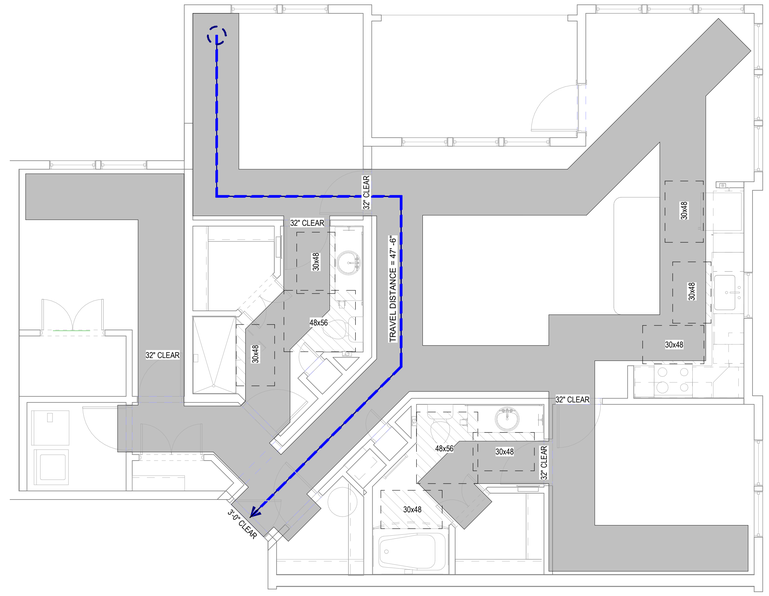

J3 UNIT 3C - LIFE SAFETY PLAN
1/4" = 1'-0"

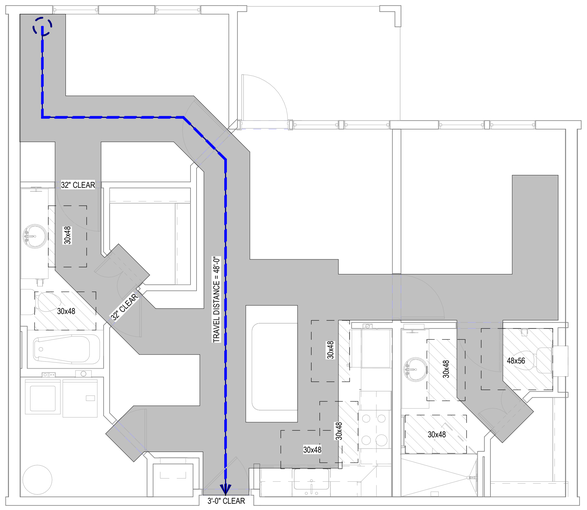

H1 UNIT 2B - LIFE SAFETY PLAN
1/4" = 1'-0"

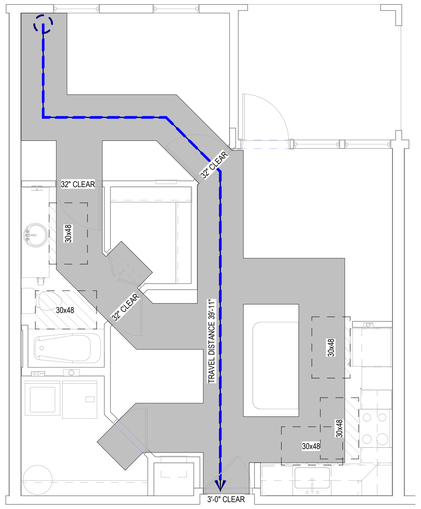

H2 UNIT 1B - LIFE SAFETY PLAN
1/4" = 1'-0"

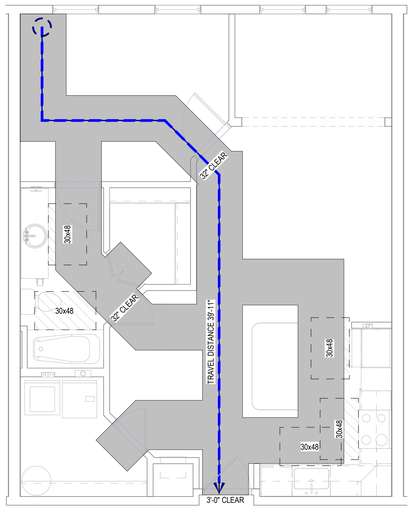

H3 UNIT 1Bs - LIFE SAFETY PLAN
1/4" = 1'-0"

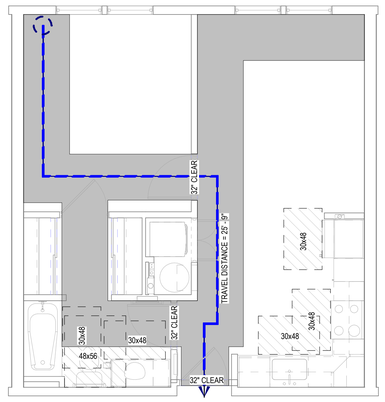

H4 UNIT 1A - LIFE SAFETY PLAN
1/4" = 1'-0"

ISSUE HISTORY

No.	Date	Description
1	04/15/2022	PERMIT SUBMITTAL

REVISION HISTORY

No.	Date	Description

FUGLEBERG KOCH
2555 Temple Trail, Winter Park, FL 32789 (407) 629-0595
www.fuglebergkoch.com AA26002103

CONSULTANT

STATE OF ALABAMA
MICHAEL E. GOVE
8234
4/15/22
REGISTERED ARCHITECT

MICHAEL GOVE
8234

THE ROBERT MADISON
MADISON, ALABAMA

Drawn:	MB
Checked:	JK
Approval:	MG
Date:	04/15/2022
Project #:	5722

LIFE SAFETY PLANS - UNIT PLANS

A0.20

PLOTTED: 5/3/2022 3:18:16 PM

© 2018 These documents and their contents are the property of FUGLEBERG KOCH - AA26002103, and are issued only for the specific project noted on these drawings. Any reproductions, revisions, or modifications of these documents without the expressed written consent of Fugleberg Koch is prohibited by law.

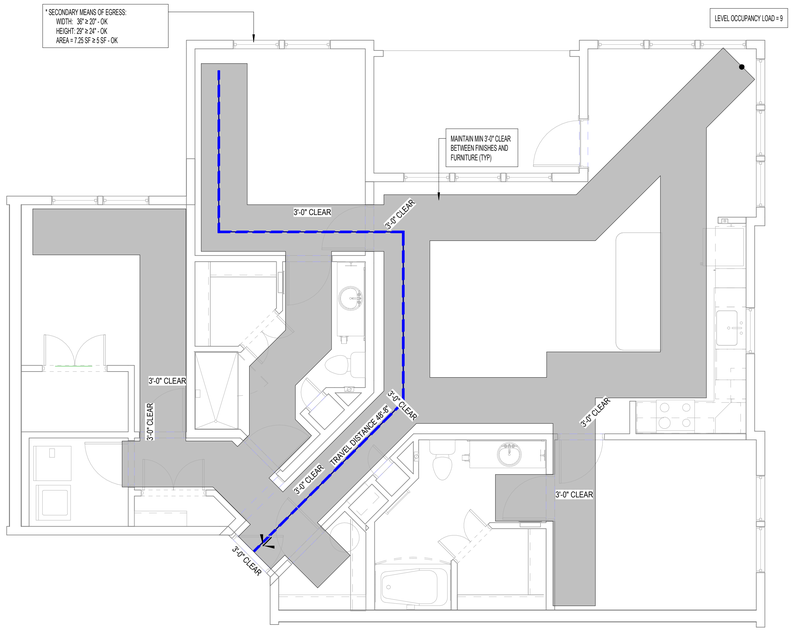

E1 UNIT 3C ANSI - LIFE SAFETY PLAN
1/4" = 1'-0"

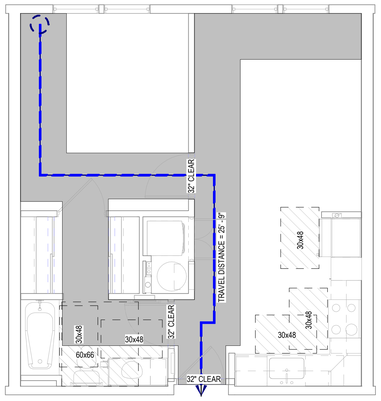

J6 UNIT 1A ANSI - LIFE SAFETY PLAN
1/4" = 1'-0"

ISSUE HISTORY

No.	Date	Description
1	04/15/2022	PERMIT SUBMITTAL

REVISION HISTORY

No.	Date	Description

FUGLEBERG KOCH
2555 Temple Trail, Winter Park, FL 32789 (407) 629-0595
www.fuglebergkoch.com AA26002103

CONSULTANT

STATE OF ALABAMA LICENSED MICHAEL J. GOVE 8234 4/15/22 REGISTERED ARCHITECT

MICHAEL GOVE
8234

THE ROBERT MADISON
MADISON, ALABAMA

Drawn:	MB
Checked:	JK
Approval:	MG
Date:	04/15/2022
Project #:	5122

LIFE SAFETY PLANS - UNIT PLANS

A0.21

PLOTTED: 5/3/2022 3:18:21 PM

© 2018 These documents and their contents are the property of FUGLEBERG KOCH - AA26002103. and are issued only for the specific project noted on these drawings. Any reproductions, revisions, or modifications of these documents without the expressed written consent of Fugleberg Koch is prohibited by law.

Design No. U305

June 28, 2019

Bearing Wall Rating — 1 Hr
Finish Rating — See Items 3, 3A, 3D, 3E, 3F, 3G, 3H, 3J and 3L.
STC Rating - 56 (See Item 9)
This design was evaluated using a load design method other than the Limit States Design Method (e.g., Working Stress Design Method). For jurisdictions employing the Limit States Design Method, such as Canada, a load restriction factor shall be used

*** Indicates such products shall bear the UL or cUL Certification Mark for jurisdictions employing the UL or cUL Certification (such as Canada), respectively.**

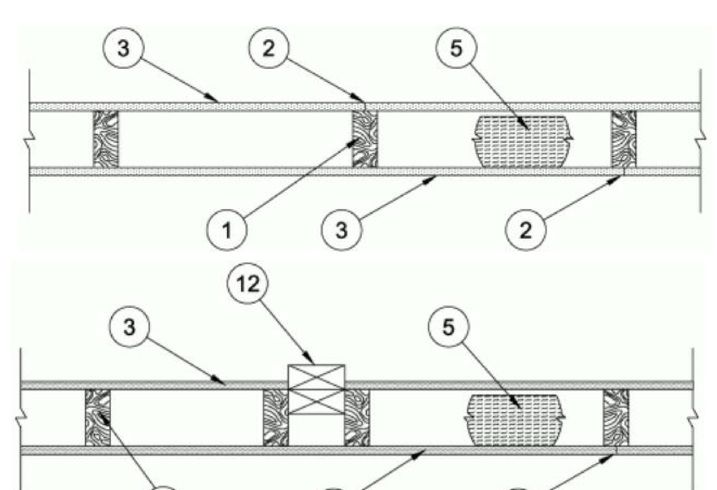

1. **Wood Studs —** Nom 2 by 4 in. spaced 16 in. OC max, effectively firestopped.
2. **Joints and Nail-Heads —** Joints covered with joint compound and paper tape. Joint compound and paper tape may be omitted when square edge boards are used. As an alternate, nom 3/32 in. thick gypsum veneer plaster may be applied to the entire surface of Classified veneer baseboard with the joints reinforced with paper tape. Nailheads exposed or covered with joint compound.
3. **Gypsum Board* —** 5/8 in. thick paper or vinyl surfaced, with beveled, square, or tapered edges, applied either horizontally or vertically. Gypsum panels nailed 7 in. OC with 6d cement coated nails 1-7/8 in. long, 0.0915 in. shank diam and 15/64 in. diam heads. When used in widths other than 48 in., gypsum panels are to be installed horizontally. For an alternate method of attachment of gypsum panels, refer to Items 6 through 6E, **Steel Framing Members***.

When Items 6, 6B, 6C, 6D, 6E, or 6F, **Steel Framing Members***, are used, gypsum panels attached to furring channels with 1 in. long Type S bugle-head steel screws spaced 12 in. OC.

When Item 6A, **Steel Framing Members***, is used, two layers of gypsum panels attached to furring channels. Base layer attached to furring channels with 1 in. long Type S bugle-head steel screws spaced 12 in. OC. Face layer attached to furring channels with 1-5/8 in. long Type S bugle-head steel screws spaced 12 in. OC. All joints in face layers staggered with joints in base layers. One layer of gypsum board attached to opposite side of wood stud without furring channels as described in Item 3.

When Item 7, resilient channels are used, 5/8 in. thick, 4 ft wide gypsum panels applied vertically. Screw attached furring channels with 1 in. long, self-drilling, self-tapping Type S or S-12 steel screws spaced 8 in. OC, vertical joints located midway between studs.

CABOT MANUFACTURING ULC — Type X (finish rating 22 min), 5/8 Type X, Moisture Resistant Type X, Gypsum Sheathing Type X, Mold & Mildew Resistant Type X and Mold & Mildew Resistant AR Type X, Type Blueglass Exterior Sheathing

AMERICAN GYPSUM CO — Types AGX-1(finish rating 23 min.), M-Glass (finish rating 23 min.), Type AGX-11 (finish rating 26 min), Type AGX-12 (finish rating 22 min), Type LightRoc (finish rating 23 min.) or Type AG-C

BEIJING NEW BUILDING MATERIALS PUBLIC LTD CO — Type DBX-1 (finish rating 24 min)

CERTAINTEED GYPSUM INC — Type 1, Type SF3 (finish rating 20 min) or FRPC; Type C., Type X or Type X-1 (finish rating 26 min); Type EGRG or GlasRoc (finish rating 23 min), GlasRoc-2, Type Habito (finish rating 26 min).

CGC INC — Type AR (finish rating 24 min), Type C (finish rating 24 min), Type IP-AR (finish rating 24 min), Type IPC-AR (finish rating 24 min), Type IP-X1 (finish rating 24 min), Type IP-X2 (finish rating 24 min), Type SCX (finish rating 24 min), Type SHX (finish rating 24 min), Type ULX (finish rating 22 min), Type WRC (finish rating 24 min), Type WRX (finish rating 24 min)

CONTINENTAL BUILDING PRODUCTS OPERATING CO, L L C — Type LGFC6A (finish rating 34 min), Type LGFC2A, Type LGFC-C/A, Type LGFC-WD, Type LGLLX (finish rating 21 min), Type CLLX (finish rating 24 min)

GEORGIA-PACIFIC GYPSUM L L C — Type 5 (finish rating 26 min), Type 6 (finish rating 23 min), Type 9 (finish rating 26 min), Type C (finish rating 26 min), Type DGG (finish rating 20 min), Type GPFS1 (finish rating 20 min), Type GPFS2 (finish rating 20 min), Type GPFS6 (finish rating 26 min), Type DS, Type DAP, Type DD (finish rating 20 min), Type DA, Type DAPC, Type LS (finish rating 23 min), Type X, Veneer Plaster Base - Type X, Water Rated - Type X, Sheathing - Type X, Soffit - Type X, Type LWX (finish rating 22 min), Veneer Plaster Base-Type LWX (finish rating 22 min), Water Rated-Type LWX (finish rating 22 min), Sheathing Type-LWX (finish rating 22 min), Soffit-Type LWX (finish rating 22 min), Type DGLW (finish rating 22 min), Water Rated-Type DGLW (finish rating 22 min), Sheathing Type-DGLW (finish rating 22 min), Soffit-Type DGLW (finish rating 22 min), Type LWX (finish rating 22 min), Type LW2X (finish rating 22 min), Veneer Plaster Base - Type LW2X (finish rating 22 min), Water Rated - Type LW2X (finish rating 22 min), Sheathing - Type LW2X (finish rating 22 min), Soffit - Type LW2X (finish rating 22 min), Type DGL2W (finish rating 22 min), Water Rated - Type DGL2W (finish rating 22 min), Sheathing - Type DGL2W (finish rating 22 min)
NATIONAL GYPSUM CO — Type FSK (finish rating 20 min), Type FSK-G (finish rating 20 min), Type FSW (finish rating 20 min), Type FSW-2 (finish rating 24 min), Type FSW-3 (finish rating 20 min), Type FSW-5 (finish rating 22 min), Type FSW-G (finish rating 20 min), Type FSK-C (finish rating 20 min), Type FSW-C (finish rating 20 min), Type FSMR-C, Type FSW-6 (finish rating 20 min), Type FSL (finish rating 24 min), Type FSW-8, Type FSLX (finish rating 21 min).
NATIONAL GYPSUM CO — Riyadh, Saudi Arabia — Type FR, or WR.
PABCO BUILDING PRODUCTS L L C, DBA PABCO GYPSUM — Types C, PG-2 (finish rating 20 min), PG-3 (finish rating 20 min), Types PG-3W, PG-5W (finish rating 20 min), Type PG-4 (finish rating 20 min), Type PG-6 (finish rating 23 min), Types PG-3WS, PG-5WS, PGS-WRS (finish rating 20 min), Types PG-5, PG-9 (finish rating 26 min), PG-11 PG-13 (Nails increased to 2 in.), or Type PG-C
PANEL REY S A — Type GREX, GRIX, PRX, PRC, PRC2; Types RHX, Guard Rey, MDX, ETX (finish rating 22 min)
SIAM GYPSUM INDUSTRY (SARABURI) CO LTD — Type EX-1 (finish rating 26 min)
THAI GYPSUM PRODUCTS PCL — Type C, Type X (finish rating 26 min)
UNITED STATES GYPSUM CO — Type AR (finish rating 24 min), Type C (finish rating 24 min), Type FRX-G (finish rating 29 min), Type IP-AR (finish rating 24 min), Type IPC-AR (finish rating 24 min), Type IP-X1 (finish rating 24 min), Type IP-X2 (finish rating 24 min), Type SHX (finish rating 24 min), Type SCX (finish rating 24 min), Type SGX (finish rating 24 min), Type ULX (finish rating 22 min), Type WRX (finish rating 24 min), Type WRC (finish rating 24 min), Type ULIX (finish rating 20 min)
USG BORAL DRYWALL SFZ LLC — Type SGX (finish rating 24 min).
USG MEXICO S A DE C V — Type AR (finish rating 24 min), Type C (finish rating 24 min), Type WRX (finish rating 24 min), Type WRC (finish rating 24 min), Type IP-X1 (finish rating 24 min), Type IP-X2 (finish rating 24 min), Type SHX (finish rating 24 min), SCX (finish rating 24 min), Type IP-AR (finish rating 24 min), Type IPC-AR (finish rating 24 min), Type ULX (finish rating 22 min)

3A. **Gypsum Board* —** (As an alternate to Item 3) — 5/8 in. thick gypsum panels, with beveled, square, or tapered edges, applied either horizontally or vertically. Gypsum panels fastened to framing with 1-1/4 in. long Type W coarse thread gypsum panel steel screws spaced a max 8 in. OC, with last screw 1 in. from edge of board. When used in widths of other than 48 in., gypsum boards are to be installed horizontally.

AMERICAN GYPSUM CO — Types AGX-1 (finish rating 25 min.), M-Glass (finish rating 25 min.), AG-C (finish rating 25 min.), LighttRoc (finish rating 25 min.)

CERTAINTEED GYPSUM INC — Type C, Type X or Type X-1 (finish rating 26 min)

CGC INC — Type AR (finish rating 24 min), Type C (finish rating 24 min), Type IP-AR (finish rating 24 min), Type IPC-AR (finish rating 24 min), Type IP-X1 (finish rating 24 min), Type IP-X2 (finish rating 24 min), Type SCX (finish rating 24 min), Type SHX (finish rating 24 min), Type WRC (finish rating 24 min), Type WRX (finish rating 24 min)
NATIONAL GYPSUM CO — Type FSW (finish rating 24 min)
UNITED STATES GYPSUM CO — Type AR (finish rating 24 min), Type SCX (finish rating 24 min), Type SGX (finish rating 24 min), Type C (finish rating 24 min), Type WRX (finish rating 24 min), Type WRC (finish rating 24 min), Type IP-X1 (finish rating 24 min), Type IP-X2 (finish rating 24 min), Type SHX (finish rating 24 min), Type FRX-G (finish rating 24 min), Type IP-AR (finish rating 24 min), Type IPC-AR (finish rating 24 min)
USG BORAL DRYWALL SFZ LLC — Types C, SCX, SGX (finish rating 24 min).
USG MEXICO S A DE C V — Type AR (finish rating 24 min), Type C (finish rating 24 min), Type WRX (finish rating 24 min), Type WRC (finish rating 24 min), Type IP-X1 (finish rating 24 min), Type IP-X2 (finish rating 24 min), Type SHX (finish rating 24 min), Type SCX, Type IP-AR (finish rating 24 min), Type IPC-AR (finish rating 24 min)

3B. **Gypsum Board* —** (As an alternate to Item 3) — Nom 3/4 in. thick, installed with 1-7/8 in. long cement coated nails as described in Item 3 or 1-3/8 in. long Type W coarse thread gypsum panel steel screws as described in Item 3A.
CGC INC — Types AR, IP-AR
UNITED STATES GYPSUM CO — Types AR, IP-AR
USG MEXICO S A DE C V — Types AR, IP-AR
3C. **Gypsum Board* —** (As an alternate to Items 3, 3A and 3B) — 5/8 in. thick, 2 ft wide, tongue and groove edge, applied horizontally to one side of the assembly. Installed with 1-7/8 in. long cement coated nails as described in Item 3 or 1-1/4 in. long Type W coarse thread gypsum panel steel screws as described in Item 3A. Joint covering (Item 2) not required.
CGC INC — Type SHX
UNITED STATES GYPSUM CO — Type SHX
USG MEXICO S A DE C V — Type SHX
3D. **Gypsum Board* —** (As an alternate to Items 3, 3A, 3B, or 3C — Not Shown) — For Direct Application to Studs Only- Nom 5/8 in. thick lead backed gypsum panels with beveled, square or tapered edges, applied vertically. Vertical joints centered over studs and staggered min 1 stud cavity on opposite sides of studs. Wallboard secured to studs with 1-5/8 in. long Type W coarse thread gypsum panel steel screws spaced 8 in. OC at perimeter and in the field. Lead batten strips required behind vertical joints of lead backed gypsum wallboard and optional at remaining stud locations. Lead batten strips, min 1-1/2 in. wide, max 10 ft long with a max thickness of 0.125 in. placed on the face of studs and attached to the stud with two 1 in. long Type S-12 pan head steel screws, one at the top of the strip and one at the bottom of the strip. Lead discs or tabs may be used in lieu of or in addition to the lead batten strips or optional at other locations. Max 3/4 in. diam by max 0.125 in. thick lead discs compression fitted or adhered over steel screw heads or max 1/2 in. by 1-1/4 in. by max 0.125 in. thick lead tabs placed on gypsum boards underneath screw locations prior to the installation of the screws. Lead batten strips to have a purity of 99.9% meeting the Federal specification QQ-L-201f, Grade "C".
RAY-BAR ENGINEERING CORP — Type RB-LBG (finish rating 24 min)
3E. **Gypsum Board* —** (As an alternate to Items 3, 3A, 3B, 3C, and 3D) — 5/8 in. thick gypsum panels, with square edges, applied either horizontally or vertically. Gypsum panels fastened to framing with 1-1/4 in. long Type W coarse thread gypsum panel steel screws spaced a max 8 in. OC, with last 2 screws 1 and 4 in. from edge of board or nailed 7 in. OC with 6d cement coated nails 1-7/8 in. long, 0.0915 in. shank diam and 15/64 in. diam heads. When used in widths of other than 48 in., gypsum boards are to be installed horizontally.
GEORGIA-PACIFIC GYPSUM L L C — Type DGG (finish rating 20 min), GreenGlass Type X (finish rating 23 min)
3F. **Gypsum Board* —** (As an alternate to Items 3, 3A, 3B, 3C, 3D, and 3E) — 5/8 in. glass-mat faced with square edges, applied either horizontally or vertically. Gypsum panels nailed 7 in. OC around the perimeter and in the field with 6d cement coated nails 1-7/8 in. long, 0.0915 in. shank diam and 15/64 in. diam heads. Nails shall be placed 1 inch and 3 inch from horizontal joints and 7 inch OC thereafter.
CGC INC — Type USGX (finish rating 22 min)
UNITED STATES GYPSUM CO — Type USGX (finish rating 22 min.)
USG BORAL DRYWALL SFZ LLC — , Type USGX (finish rating 22 min.)
USG MEXICO S A DE C V — Type USGX (finish rating 22 min.)
3G. **Gypsum Board* —** (As an alternate to Items 3 through 3F) — 5/8 in. thick paper surfaced applied vertically. Gypsum panels nailed 7 in. OC with 6d cement coated nails 1-7/8 in. long, 0.0915 in. shank diam and 15/64 in. diam heads.
GEORGIA-PACIFIC GYPSUM L L C — Type X ComfortGuard Sound Deadening Gypsum Board (finish rating 27 min)
3H. **Gypsum Board* —** (As an alternate to Items 3) — Not to be used with items 6 or 7. 5/8 in. thick paper surfaced applied vertically only. Gypsum panels nailed 7 in. OC with 6d cement coated nails 1-7/8 in. long, 0.0915 in. shank diam and 15/64 in. diam heads.
NATIONAL GYPSUM CO — SoundBreak XP Type X Gypsum Board
3I. **Gypsum Board* —** (As an alternate to Items 3 through 3H, Not Shown) — Nominal 5/8 in. thick, 4 ft wide panels, applied vertically. Panels nailed 7 in. OC with 6d cement coated nails 1-7/8 in. long, 0.0915 in. shank diam and 15/64 in. diam heads. Panel joints covered with paper tape and two layers of joint compound. Nailheads covered with two layers of joint compound.
PABCO BUILDING PRODUCTS L L C, DBA PABCO GYPSUM — Type QuietRock ES (finish rating 20 min)
3J. **Gypsum Board* —** (As an alternate to Item 3) — Not to be used with items 6 or 7. 5/8 in. thick paper surfaced applied vertically or horizontally. Gypsum panels secured per item 3 or 3A.
CERTAINTEED GYPSUM INC — Type SilentFX
3K. **Gypsum Board* —** (As an alternate to Item 3) — 5/8 in. thick gypsum panels, with beveled, square, or tapered edges, applied either horizontally or vertically. Gypsum panels fastened to framing with 1-1/4 in. long Type W coarse thread gypsum panel steel screws spaced a maximum 8 in. OC with the last screw 1 in. from the edge of the board. When used in widths other than 48 in., gypsum panels are to be installed horizontally.
NATIONAL GYPSUM CO — Type FSK (finish rating 20 min), Type FSK-G (finish rating 20 min), Type FSW (finish rating 20 min), Type FSW-2 (finish rating 24 min), Type FSW-3 (finish rating 20 min), Type FSW-5 (finish rating 22 min), Type FSW-G (finish rating 20 min), Type FSK-C (finish rating 20 min), Type FSW-C (finish rating 20 min), Type FSMR-C, Type FSW-6 (finish rating 20 min), Type FSL (finish rating 24 min).
3L. **Gypsum Board* —** (As an alternate to Item 3) — For Direct Application to Studs Only — Nom 5/8 in. thick lead backed gypsum panels with beveled, square or tapered edges, applied vertically. Vertical joints centered over studs and staggered min 1 stud cavity on opposite sides of studs. Wallboard secured to studs with 1-5/8 in. long Type W coarse thread gypsum panel steel screws spaced 8 in. OC at perimeter and in the field. Lead batten strips required behind vertical joints of lead backed gypsum wallboard and optional at remaining stud locations. Lead batten strips, min 2 in. wide, max 10 ft long with a max thickness of 0.140 in. placed on the face of studs and attached to the stud with two 1 in. long Type S-8 pan head steel screws, one at the top of the strip and one at the bottom of the strip. Lead discs, max 5/16 in. diam by max 0.140 in. thick. compression fitted or adhered over the screw heads. Lead batten strips to have a purity of 99.5% meeting the Federal specification QQ-L-201f, Grades "B, C or D".
MAYCO INDUSTRIES INC — "X-Ray Shielded Gypsum"
3M. **Gypsum Board* —** (As an alternate to Items 3) — For Direct Application to Studs Only — For use as the base layer or as the face layer. Nom 5/8 in. thick lead backed gypsum panels with beveled, square or tapered edges, applied vertically. Vertical joints centered over studs and staggered min 1 stud cavity on opposite sides of studs. Wallboard secured to studs with 1-5/8 in. long Type W coarse thread gypsum panel steel screws spaced 8 in. OC at perimeter and in the field when applied as the base layer. When applied as the face layer screw length to be increased to 2-1/2 in. Lead batten strips required behind vertical joints of lead backed gypsum wallboard and optional at remaining stud locations. Lead batten strips, min 2 in. wide, max 8 ft long with a max thickness of 0.14 in. placed on the face of studs and attached to the stud with construction adhesive and two 1 in. long Type S-12 pan head steel screws, one at the top of the strip and one at the bottom of the strip. Lead discs, nominal 3/8 in. diam by max 0.085 in. thick. Compression fitted or adhered over the screw heads. Lead batten strips and discs to have a purity of 99.9% meeting the Federal specification QQ-L-201f, Grade "C". Fasteners for face layer gypsum panels (Items 4, 4A or 4B) when installed over lead backed board to be min 2-1/2 in. Type S-12 bugle head steel screws spaced as described in Item 4.
RADIATION PROTECTION PRODUCTS INC — Type RPP - Lead Lined Drywall
3N. **Gypsum Board* —** (As an alternate to Item 3) — 5/8 in. thick, 4 ft. wide, applied horizontally or vertically with vertical joints centered over studs and staggered one stud cavity on opposite sides of studs. Secured as described in Item 3 or 3A.
CERTAINTEED GYPSUM INC — Easi-Lite Type X (finish rating 24 min), Easi-Lite Type X-2 (finish rating 24 min)
3O. **Wall and Partition Facings and Accessories* —** (As an alternate to Item 3, Not Shown) — Nominal 5/8 in. thick, 4 ft wide panels, applied vertically. Panels nailed 7 in. OC with 6d cement coated nails 1-7/8 in. long, 0.0915 in. shank diam and 15/64 in. diam heads. Panel joints covered with paper tape and two layers of joint compound. Nailheads covered with two layers of joint compound.
PABCO BUILDING PRODUCTS L L C, DBA PABCO GYPSUM — Type QuietRock 527 (finish rating 24 min).
3P. **Gypsum Board* —** (As an alternate to Item 3, Not Shown) — Two layers nom. 5/16 in. thick gypsum panels applied vertically or horizontally. Horizontal edge joints and horizontal butt joints on opposite sides of studs need not be staggered or backed by wood studs. Horizontal joints on the same side between face and base layers need not be staggered. Base layer gypsum panels fastened to studs with 1-1/4 in. long drywall nails spaced 8 in. OC. Face layer gypsum panels fastened to studs with 1-7/8 in. long drywall nails spaced 8 in. OC starting with a 4" stagger.
NATIONAL GYPSUM CO — Type FSW (finish rating 25 min)
3Q. **Gypsum Board* —** (As an alternate to Item 3) — 5/8 in. thick gypsum panels, with beveled, square, or tapered edges, applied either horizontally or vertically. Gypsum panels fastened to framing with 1-1/4 in. long Type W coarse thread gypsum panel steel screws spaced a maximum 10 in. OC with the last two screws 4 and 1 in. from the edges of the board. When used in widths other than 48 in., gypsum panels are to be installed horizontally.
CONTINENTAL BUILDING PRODUCTS OPERATING CO, L L C — Type LGFC6A (finish rating 21 min), Type LGFC2A, Type LGFC-C/A, Type LGFC-WD, Type LGLLX
3R. **Gypsum Board* —** (As an alternate to Item 3. For use with Item 5H) — Any 5/8 in. thick, 4 ft. wide, Gypsum Board listed in Item 3 above. Applied either horizontally or vertically, and screwed to panels with 1-5/8 in. long Type W coarse thread steel screws at 8 in. OC at perimeter and in the field with the last two screws 4 and 3/4 in. from the edges of the board when applied as the base layer. When used in widths other than 48 in., gypsum panels are to be installed horizontally.
3S. **Gypsum Board* —** 3/4 in. thick paper or vinyl surfaced, with beveled, square, or tapered edges, applied either horizontally or vertically. Gypsum panels secured as described in Item 3 with nail length increased to 2 in.
PABCO BUILDING PRODUCTS L L C, DBA PABCO GYPSUM — Type PG-13
3T. **Wall and Partition Facings and Accessories* —** (As an alternate to 5/8 in. thick board as outlined in Item 3) — Nominal 1-3/8 in. thick, 4 ft wide panels, applied vertically or horizontally. Fastened with #6 x 2 in. long drywall screws spaced 8 in. OC along the perimeter and 12 in. OC in the field.
PABCO BUILDING PRODUCTS L L C, DBA PABCO GYPSUM — Type QuietRock 545
4. **Steel Corner Fasteners —** (Optional) — For use at wall corners. Channel shaped, 2 in. long by 1 in. high on the back side with two 1/8 in. wide cleats protruding into the 5/8 in. wide channel, fabricated from 24 gauge galv steel. Fasteners applied only to the end or cut edge (not along tapered edges) of the gypsum board, no greater than 2 in. from corner of gypsum board, max spacing 16 in. OC. Nailed to adjacent stud through tab using one No. 6d cement coated nail per fastener. Corners of wall board shall be nailed to top and bottom plate using No. 6d cement coated nails.
5. **Batts and Blankets* —** (Optional — Required when Item 6A is used (RC-1)) — Glass fiber or mineral wool insulation. Placed to completely or partially fill the stud cavities. When Item 6A is used, glass fiber or mineral wool insulation shall be friction-fitted to completely fill the stud cavities.
CERTAINTEED CORP
JOHNS MANVILLE
KNAUF INSULATION LLC
MANSON INSULATION INC
OWENS CORNING HT INC, DIV OF OWENS CORNING — Corning Fiberglas Corp
ROCK WOOL MANUFACTURING CO — Delta Board
ROCKWOOL — Acoustical Fire Batts
THERMAFIBER INC — Type SAFB, SAFB FF

5A. **Fiber, Sprayed* —** (Not Shown — Not for use with Item 6) — As an alternate to Batts and Blankets (Item 5) — Spray applied cellulose material. The fiber is applied with water to completely fill the enclosed cavity in accordance with the application instructions supplied with the product with a nominal dry density of 2.7 lb/ft³. Alternate Application Method: The fiber is applied without water or adhesive at a nominal dry density of 3.5 lb/ft³, in accordance with the application instructions supplied with the product. When Item 6B is used, Fiber, Sprayed shall be INS735, INS745, INS765LD or INS770LD.
U S GREENFIBER L L C — INS735& INS745 for use with wet or dry application. INS510LD, INS515LD, INS541LD, INS735, INS745, INS765LD, and INS770LD are to be used for dry application only
5B. **Fiber, Sprayed* —** (Not Shown - Not for use with Item 6) — As an alternate to Batts and Blankets (Item 5) - Spray applied cellulose insulation material. The fiber is applied with water to interior surfaces in accordance with the application instructions supplied with the product. Applied to completely fill the enclosed cavity. Minimum dry density of 4.3 pounds per cubic ft.
NU-WOOL CO INC — Cellulose Insulation
5C. **Batts and Blankets* —** Required for use with resilient channels, Item 7, 3 in. thick mineral wool batts, friction-fitted to fill interior of wall.
THERMAFIBER INC — Type SAFB, SAFB FF
5D. **Glass Fiber Insulation —** (As an alternate to Item 5C) — 3 in. thick glass fiber batts bearing the UL Classification Marking as to Surface Burning and/or Fire Resistance, friction-fitted to fill the interior of the wall. See **Batts and Blankets** (BKNV or BZJZ) Categories for names of Classified companies.
5E. **Batts and Blankets* —** (Required for use with Wall and Partition Facings and Accessories, Item 3D) — Glass fiber insulation, nom 3-1/2 in. thick, min. density of 0.80 pcf, with a flame spread of 25 or less and a smoke developed of 50 or less, friction-fitted to completely fill the stud cavities. See Batts and Blankets Category (BKNV) for names of manufacturers.
5F. **Fiber, Sprayed* —** (Optional, Not Shown — Not for use with Items 6, 6A, 6B, 6C, or 6D) — As an alternate to Batts and Blankets (Item 5) and Item 5A - Spray applied granulated mineral fiber material. The fiber is applied with adhesive, at a minimum density of 4.0 pcf, to completely fill the enclosed cavity in accordance with the application instructions supplied with the product. See **Fiber, Sprayed** (CCAZ).
AMERICAN ROCKWOOL MANUFACTURING, LLC — Type Rockwool Premium Plus
5G. **Fiber, Sprayed* —** (Optional, Not Shown — Not for use with Items 6, 6A, 6B, 6C, or 6D). — As an alternate to Batts and Blankets (Item 5) and Item 5A - Brown Colored Spray applied cellulose fiber. The fiber is applied with water to completely fill the enclosed stud cavity in accordance with the application instructions supplied with the product. The minimum dry density shall be 4.30 lbs/ft³.
INTERNATIONAL CELLULOSE CORP — Celbar-RL
5H. **Foamed Plastic* —** (Optional -For use with Item 3R) — Spray applied, foamed plastic insulation, at any thickness from partial fill to completely filling stud cavity.
SES FOAM INC — Nexseal™ 2.0 or Nexseal™ 2.0 LE Spray Foam and Sucraseal Spray Foam.
5I. **Fiber, Sprayed* —** (Not Shown — Not for use with Item 6) — As an alternate to Batts and Blankets (Item 5) - Spray- applied cellulose material. The fiber is applied with water to completely fill the enclosed cavity in accordance with the application instructions supplied with the product. To facilitate the installation of the material, any thin, woven or non- woven netting may be attached by any means possible to the outer face the studs. The material shall reach equilibrium moisture content before the installation of materials on either face of the studs. The minimum dry density shall be 5.79 lbs/ft³.
APPLEGATE HOLDINGS L L C — Type 1 SAFE Applegate Fired Rated Material
6. **Steel Framing Members* —** (Optional, Not Shown) — Furring channels and Steel Framing Members as described below:
a. **Furring Channels —** Formed of No. 25 MSG galv steel. 2-9/16 in. or 2-23/32 in. wide by 7/8 in. deep, spaced 24 in. OC perpendicular to studs. Channels secured to studs as described in Item b. Ends of adjoining channels are overlapped 6 in. and tied together with double strand of No. 18 SWG galv steel wire near each end of overlap. As an alternate, ends of adjoining channels may be overlapped 6 in. and secured together with two self-tapping #6 framing screws, min. 7/16 in. long at the midpoint of the overlap, with one screw on each flange of the channel. Gypsum board attached to furring channels as described in Item 3.
b. **Steel Framing Members* —** Used to attach furring channels (Item 6a) to studs. Clips spaced 48 in. OC. RSIC-1 and RSIC-1 (2.75) clips secured to studs with No. 8 x 2-1/2 in. coarse drywall screw through the center grommet. RSIC-V and RSIC-V (2.75) clips secured to studs with No. 8 x 1-1/2 in. coarse drywall screw through the center hole. Furring channels are friction fitted into clips. RSIC-1 and RSIC-V clips for use with 2-9/16 in. wide furring channels. RSIC-1 (2.75) and RSIC-V (2.75) clips for use with 2-23/32 in. wide furring channels.
PAC INTERNATIONAL L L C — Types RSIC-1, RSIC-V, RSIC-1 (2.75), RSIC-V (2.75)
6A. **Steel Framing Members* —** (Optional, Not Shown) — Furring channels and Steel Framing Members on one side of studs as described below:
a. **Furring Channels —** Formed of No. 25 MSG galv steel, spaced 24 in. OC perpendicular to studs. Channels secured to studs as described in Item b. Ends of adjoining channels are overlapped 6 in. and tied together with double strand of No. 18 SWG galv steel wire near each end of overlap. Batts and Blankets placed in stud cavity as described in Item 5. Two layers of gypsum board attached to furring channels as described in Item 3.
b. **Steel Framing Members* —** Used to attach furring channels (Item 6Aa) to one side of studs only. Clips spaced 48 in. OC., and secured to studs with two No. 8 x 2-1/2 in. coarse drywall screws, one through the hole at each end of the clip. Furring channels are friction fitted into clips.
KINETICS NOISE CONTROL INC — Type Isomax
6B. **Steel Framing Members* —** (Optional, Not Shown) — Furring channels and Steel Framing Members as described below:
a. **Furring Channels —** Formed of No. 25 MSG galv steel. 2-3/8 in. wide by 7/8 in. deep, spaced 24 in. OC perpendicular to studs. Channels secured to studs as described in Item b. Ends of adjoining channels are overlapped 6 in. and tied together with double strand of No. 18 SWG galv steel wire near each end of overlap. As an alternate, ends of adjoining channels may be overlapped 6 in. and secured together with two self-tapping #6 framing screws, min. 7/16 in. long at the midpoint of the overlap, with one screw on each flange of the channel. Gypsum board attached to furring channels as described in Item 3.
b. **Steel Framing Members* —** Used to attach furring channels (Item 6Ba) to studs. Clips spaced 48 in. OC. Genie clips secured to studs with No. 8 x 1-1/2 in. coarse drywall screw through the center hole. Furring channels are friction fitted into clips.
PLITEQ INC — Type Genie Clip
6C. **Steel Framing Members* —** (Optional, Not Shown) — Furring channels and Steel Framing Members as described below:
a. **Furring Channels —** Formed of No. 25 MSG galv steel. Spaced 24 in. OC perpendicular to studs. Channels secured to studs as described in Item b. Ends of adjoining channels overlapped 6 in. and tied together with double strand of No. 18 AWG galvanized steel wire. Gypsum board attached to furring channels as described in Item 3.
b. **Steel Framing Members* —** Used to attach furring channels (Item 6Ca) to studs. Clips spaced 48 in. OC., and secured to studs with No. 2 in. coarse drywall screw with 1 in. diam washer through the center hole. Furring channels are friction fitted into clips.
STUDCO BUILDING SYSTEMS — RESILMOUNT Sound Isolation Clips - Type A237 or A237R
6D. **Steel Framing Members* —** (Optional, Not Shown) — Furring channels and Steel Framing Members as described below:
a. **Furring Channels —** Formed of No. 25 MSG galv steel, spaced 24 in. OC, and perpendicular to studs. Channels secured to studs as described in Item b. Ends of adjoining channels overlapped 6 in. and secured in place with a double strand of No. 18 AWG twisted steel wire. Gypsum board attached to furring channels as described in Item 3.
b. **Steel Framing Members* —** Used to attach furring channels (Item 6Da) to studs. Clips spaced 48 in. OC., and secured to studs with No. 8 x 2-1/2 in. coarse drywall screw through the center hole. Furring channels are friction fitted into clips.
REGUPOL AMERICA — Type SonusClip

6E. **Steel Framing Members* —** (Optional, Not Shown) — Resilient channels and Steel Framing Members as described below:
a. **Resilient Channels —** Formed of No. 25 MSG galv steel, spaced 24 in. OC, and perpendicular to studs. Channels secured to studs as described in Item b. Ends of adjoining channels overlapped 6 in. and secured in place with two No. 8 15 x 1/2 in. Philips Modified Truss screws spaced 2-1/2 in. from the center of the overlap. Gypsum board attached to resilient channels as described in Item 3.
b. **Steel Framing Members* —** Used to attach resilient channels (Item 6Ea) to studs. Clips spaced 48 in. OC., and secured to studs with No. 8 x 2-1/2 in. coarse drywall screw through the center hole. Resilient channels are secured to clips with one No. 10 x 1/2 in. pan-head self-drilling screw.
KEENE BUILDING PRODUCTS CO INC - Type RC+ Assurance Clip

7. **Furring Channel —** Optional — Not Shown — For use on one side of the wall - Resilient channels, 25 MSG galv steel, spaced vertically 24 in. OC, flange portion screw attached to one side of studs with 1-1/4 in. long diamond shaped point, double lead Phillips head steel screws. When resilient channels are used, insulation, Items 5C or 5D is required.
8. **Caulking and Sealants —** (Not Shown, Optional) — A bead of acoustical sealant applied around the partition perimeter for sound control.

9. **STC Rating —** The STC Rating of the wall assembly is 56 when it is constructed as described by Items 1 through 6, except:
A. Item 2, above — Nailheads Shall be covered with joint compound.
B. Item 2, above — Joints As described, shall be covered with fiber tape and joint compound.
C. Item 5, above — Batts and Blankets* The cavities formed by the studs shall be friction fit with R-19 unfaced fiberglass insulation batts measuring 6-1/4 in. thick and 15-1/4 in. wide.
D. Item 6, above — Steel Framing Members* Type RSIC-1 clips shall be used to attach gypsum board to studs on either side of the wall assembly.
E. Item 8, above — Caulking and Sealants (Not Shown) A bead of acoustical sealant shall be applied around the partition perimeter for sound control.
F. Steel Corner Fasteners (Item 4), Fiber, Sprayed (Items 5A and 5B) and Steel Framing Members (Item 6A), not evaluated as alternatives for obtaining STC rating.

10. **Wall and Partition Facings and Accessories* —** (Optional, Not Shown) — Nominal 1/2 in. thick, 4 ft wide panels, for optional use as an additional layer on one or both sides of the assembly. Panels attached in accordance with manufacturer's recommendations. When the QR-500 or QR-510 panel is installed between the wood framing and the UL Classified gypsum board, the required UL Classified gypsum board layer(s) is/are to be installed as indicated as to fastener type and spacing, except that the required fastener length shall be increased by a minimum of 1/2 in. Not evaluated or intended as a substitute for the required layer(s) of UL Classified Gypsum Board.
PABCO BUILDING PRODUCTS L L C, DBA PABCO GYPSUM — Type QuietRock QR-500 and QR-510

11. **Cementitious Backer Units* —** (Optional Item Not Shown — For Use On Face Of 1 Hr Systems With All Standard Items Required) - 7/16 in., 1/2 in., 5/8 in., 3/4 in. or 1 in. thick, min. 32 in. wide. Applied vertically or horizontally with vertical joints centered over studs. Fastened to studs and runners with cement board screws of adequate length to penetrate stud by a minimum of 3/8 in. for steel framing members, and a minimum of 3/4 in. for wood framing members spaced a max of 8 in. OC. When 4 ft. wide boards are used, horizontal joints need not be backed by framing.
NATIONAL GYPSUM CO — Type DuraBacker, PermaBase, DuraBacker Plus, or PermaBase Plus
12. **Non-Bearing Wall Partition Intersection —** (Optional) —Two nominal 2 by 4 in. studs or nominal 2 by 6 in. studs nailed together with two 3 in. long 10d nails spaced a max. 16 in. OC. vertically and fastened to one side of the minimum 2 by 4 in. stud with 3 in. long 10d nails spaced a max. 16 in. OC. vertically. Intersection between partition wood studs to be flush with the 2 by 4 in. studs. The wall partition wood studs are to be framed by with a second 2 by 4 in. wood stud fastened with 3 in. long 10d nails spaced a max. 16 in. OC. vertically. Maximum one non-bearing wall partition intersection per stud cavity. Non-bearing wall partition stud depth shall be at a minimum equal to the depth of the bearing wall.

13. **Mesh Netting —** (Not Shown) — Any thin, woven or non-woven fibrous netting material attached with staples to the outer face of one row of studs to facilitate the installation of the sprayed fiber from the opposite row.

14. **Mineral and Fiber Board* —** (Optional, Not Shown) — For optional use as an additional layer on one side of wall. Nom 1/2 in. thick, 4 ft wide with long dimension parallel and centered over studs. Attached to framing with 2 in. long Type W steel screws, spaced 12 in. OC. The required UL Classified gypsum board layer(s) is/are to be installed as indicated as to fastener type and spacing, except that the required fastener length shall be increased by a minimum of 1/2 in. Not evaluated or intended as a substitute for the required layer(s) of UL Classified Gypsum Board.
HOMASOTE CO — Homasote Type 440-32

14A. **Mineral and Fiber Board* —** (Optional, Not Shown) — For use with Items 14B-14E) — For optional use as an additional layer on one side of wall. Nom 1/2 in. thick, 4 ft wide with long dimension parallel and centered over studs. Attached to framing with minimum 1-3/8 in. long ring shanked nails or 1-1/4 in. long Type W steel screws, spaced 12 in. OC along board edges and 24 in. OC in field of board along intermediate framing. Not evaluated or intended as a substitute for the required layer(s) of UL Classified Gypsum Board.
HOMASOTE CO — Homasote Type 440-32
14B. **Glass Fiber Insulation —** (For use with Item 14A) — 3-1/2 in. thick glass fiber batts bearing the UL Classification Marking as to Surface Burning and/or Fire Resistance, placed to fill the interior of the wall. See Batts and Blankets (BKNV or BZJZ) categories for names of Classified companies.

14C. **Batts and Blankets* —** (As an alternate to Item 14B, For use with Item 14A), 3 in. thick mineral wool batts, placed to fill interior of wall, attached to the 3-1/2 in. face of the studs with staples placed 24 in. OC.
THERMAFIBER INC — Type SAFB, SAFB FF

14D. **Adhesive —** (For use with Item 14A) — Construction grade adhesive applied in vertical, serpentine, nominal 3/8 in. wide beads down the length of both vertical edges of Mineral and Fiber Board (Item 14A).

14E. **Gypsum Board* —** (For use with Item 14A) — 5/8 in. thick, 4 ft wide, applied vertically over Mineral and Fiber Board (Item 14A) with vertical joints located anywhere over stud cavities. Secured to mineral and fiber boards with 1-1/2 in. Type G Screws spaced 8 in. OC along edges of each vertical joint and 12 in. OC in intermediate field of the Mineral and Fiber Board (Item 14A). Secured to outermost studs and bearing plates with 2 in. long Type S screws spaced 8 in. OC. Gypsum Board joints covered with paper tape and joint compound. Screw heads covered with joint compound. Finish Rating 30 Min.

Last Updated on 2019-06-19

AMERICAN GYPSUM CO — Type AG-C
CERTAINTEED GYPSUM INC — Type FRPC, Type C, Type X-2
CGC INC — Types C, IP-X2, IPC-AR
CONTINENTAL BUILDING PRODUCTS OPERATING CO, L L C — Type LGFC-C/A
GEORGIA-PACIFIC GYPSUM L L C — Types 5, DAPC, TG-C
NATIONAL GYPSUM CO — Types FSK-C, FSW-C
PABCO BUILDING PRODUCTS L L C, DBA PABCO GYPSUM — Type PG-C
PANEL REY S A — Type PRC
THAI GYPSUM PRODUCTS PCL — Type C
UNITED STATES GYPSUM CO — Types C, IP-X2, IPC-AR
USG BORAL DRYWALL SFZ LLC — Type C
USG MEXICO S A DE C V — Types C, IP-X2, IPC-AR

14F. **Mineral and Fiber Board —** (Optional, Not Shown) — For optional use as an additional layer on one side of wall - Nom 1/2 in. thick, 4 ft wide, square edge fiber boards applied vertically to studs on one side of the wall in between the wood studs and the UL Classified Gypsum Board (Item 3). Fiber boards installed with 1-1/4 in. long, Type W, bugle head, coarse thread gypsum board screws spaced 12 in. OC max, with the last screws spaced 2 in. and 6 in. from edge of board. Gypsum board (Item 3) installed as indicated as to fastener type and spacing, except that the required fastener length shall be increased by a minimum of 1/2 in. Not evaluated or intended as a substitute for the required layer(s) of UL Classified Gypsum Board.

BLUE RIDGE FIBERBOARD INC — SoundStop

*** Indicates such products shall bear the UL or cUL Certification Mark for jurisdictions employing the UL or cUL Certification (such as Canada), respectively.**

H1 UL U305
NTS

ISSUE HISTORY

No.	Date	Description
1	04/15/2022	PERMIT SUBMITTAL

REVISION HISTORY

No.	Date	Description

FUGLEBERG KOCH
2555 Temple Trail, Winter Park, FL 32789 (407) 629-0595
www. fuglebergkoch.com AA26002103

CONSULTANT

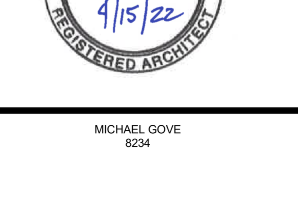

MICHAEL GOVE
8234

THE ROBERT MADISON	Drawn: MB
	Checked: JK
	Approval: MG
	Date: 04/15/2022
MADISON, ALABAMA	Project #: 5722

UL REFERENCE DIRECTORY WALL SYSTEMS

A0.30

PLOTTED: 5/3/2022 3:18:23 PM

© 2018 These documents and their contents are the property of FUGLEBERG KOCH - AA26002103, and are issued only for the specific project noted on these drawings. Any reproductions, revisions, or modifications of these documents without the expressed written consent of Fugleberg Koch is prohibited by law.

Design No. P522

June 17, 2014

Unrestrained Assembly Rating — **1 Hr**

Finish Rating — 25 Min (See Items 3 or 3A)

This design was evaluated using a load design method other than the Limit States Design Method (e.g., Working Stress Design Method). For jurisdictions employing the Limit States Design Method, such as Canada, a load restriction factor shall be used — See Guide BXUV or BXUV7

*** Indicates such products shall bear the UL or cUL Certification Mark for jurisdictions employing the UL or cUL Certification (such as Canada), respectively.**

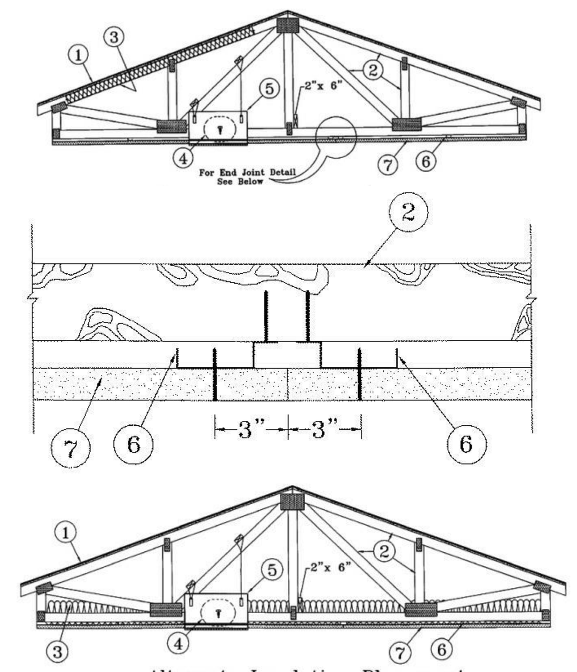

1. **Roofing System* —** Any UL Class A, B or C Roofing System (TGFU) or Prepared Roof Covering (TFWZ) acceptable for use over nom 15/32 in. thick wood structural panels, min. grade "C-D" or "Sheathing". Nom 15/32 in. thick wood structural panels secured to trusses with No. 6d ringed shank nails spaced 12 in. OC along each truss. Staples having equal or greater withdrawal and lateral resistance strength may be substituted for the 6d nails. Construction adhesive may be used with either the nails or staples.

2. **Trusses —** Pitched or parallel chord wood trusses, spaced a max of 24 in. OC, fabricated from nom 2 by 4 lumber, with lumber oriented vertically or horizontally. Truss members secured together with min. 0.0356 in. thick galv steel plates. Plates have 5/16 in. long teeth projecting perpendicular to the plane of the plate. The teeth are in pairs facing each other (made by the same punch), forming a split tooth type plate. Each tooth has a chisel point on its outside edge. These points are diagonally opposite each other for each pair. The top half of each tooth has a twist for stiffness. The pairs are repeated on approximately 7/8 in. centers with four rows of teeth per inch of plate width. Where the truss intersects with the interior face of the exterior walls, the min truss depth shall be 5-1/4 in. with a min roof slope of 3/12 and a min. area in the plane of the truss of 21 sq/ft. Where the truss intersects with the interior face of the exterior walls, the min truss depth may be reduced to 3 in. if the batts and blankets (Item 3) are used as shown in the above illustration (Alternate Insulation Placement) and are firmly packed against the intersection of the bottom chords and the plywood sheathing.

3. **Batts and Blankets* —** (Optional) - Required when Item 6B is used — Glass fiber insulation, secured to the wood structural panels with staples spaced 12 in. OC or to the trusses with 0.090 in. diam galv steel wires spaced 12 in. OC. Any glass fiber insulation bearing the UL Classification Marking as to Surface Burning Characteristics and/or Fire Resistance, having a min density of 0.5 pcf. As an option, the insulation may be fitted in the concealed space, draped over the resilient channel/gypsum board ceiling membrane when resilient channels and gypsum board attachment is modified as specified in Items 6 and 7. When **Steel Framing Members** (Item 6B) are used, max 3-1/2 in. thick insulation shall be draped over the furring channels (Item 6Ba) and gypsum board ceiling membrane, and friction-fitted between trusses and Steel Framing Members (Item 6Bd). The finished rating has only been determined when the insulation is secured to the decking.

3A. **Fiber, Sprayed* —** As an alternate to Item 3 (not evaluated for use with Item 6B) — Any thickness of spray-applied cellulose insulation material, having a min density of 0.5 lb/ft3, applied with water, over the resilient channel/gypsum board ceiling membrane when resilient channels and gypsum board attachment is modified as specified in Items 6 and 7. Fiber, Sprayed is applied with moisture in accordance with the application instructions supplied with the product. The finish rating when Fiber Sprayed is used has not been determined. Alternate application method: The fiber is applied without water or adhesive in accordance with the application instructions supplied with a minimum density of 0.5 lb/ft3 over the resilient channel/gypsum board ceiling membrane when resilient channels and gypsum board attachment is modified as specified in Items 6 and 7. Alternate application method: The fiber is applied without water or adhesive to a nominal density of 3.5 lb/ft3 behind netting (Item 9) stapled to the rafters. The netting is stapled at both lower edges of the rafters creating a cavity to accept the cellulose fiber.
U S GREENFIBER L L C — INS735& INS745 for use with wet or dry application. INS510LD, INS515LD, INS541LD, INS735, INS745, INS765LD, and INS770LD are to be used for dry application only.

4. **Air Duct* —** Any UL Class 0 or Class 1 flexible air duct installed in accordance with the instructions provided by the damper manufacturer.

5. **Ceiling Damper* —** Max nom area, 324 sq in. Max square size, 18 in. by 18 in. rectangular sizes not to exceed 324 sq in. with a max width of 18 in. Max damper height is 14 in. Installed in accordance with manufacturers installation instructions provided with the damper. Max damper openings not to exceed 162 sq in. per 100 sq ft of ceiling area.
C&S AIR PRODUCTS — Model RD-521
POTTORFF — Model CFD-521

5A. **Alternate Ceiling Damper* —** Max nom area, 196 sq in. Max square size, 14 in. by 14 in. Rectangular sizes not to exceed 196 sq in. with a max width of 26 in. Max overall damper height is 7 in. Installed in accordance with the manufacturers installation instructions provided with the damper. Max damper openings not to exceed 98 sq in. per 100 sq ft of ceiling area.

C&S AIR PRODUCTS — Model RD-521-BT
POTTORFF — Model CFD-521-BT.

5B. **Alternate Ceiling Damper* —** Ceiling damper & fan assembly. Max nom area shall be 75 sq in. with the length not to exceed 8-9/16 in. and the width not to exceed 8-3/4 in. Max height of damper shall be 9-7/8 in. Aggregate damper openings shall not exceed 38 sq in. per 100 sq ft of ceiling area. Damper shall be installed in combination with one of the fan models described in, and in accordance with, the manufacturers installation instructions provided with the damper. A plastic grille shall be installed in accordance with installation instructions.

DELTA ELECTRONICS INC — Models CRD2

6. Furring Channels — Resilient channels formed of 25 MSG thick galv steel. Installed perpendicular to the trusses (Item 2), spaced a max of 16 in. OC when no insulation (Item 3 or 3A) is fitted in the concealed spaced, or a max of 12 in. OC when insulation (Item 3 or 3A) is fitted in the concealed space, draped over the resilient channel/gypsum board ceiling membrane. Two courses of resilient channel positioned 6 in. OC at wallboard butt-joints (3 in. from each end of wallboard). Channels oriented opposite at wallboard butt-joints. Channel splices overlapped 4 in. beneath wood trusses. Channels secured to each truss with 1-1/4 in. long Type S screws.

6A. Steel Framing Members — (Not Shown)* — As an alternate to Item 6, furring channels and Steel Framing Members as described below:
a. Furring Channels — Formed of No. 25 MSG galv steel. 2-9/16 in. or 2-23/32 in. wide by 7/8 in. deep, spaced 24 in. OC perpendicular to trusses when no insulation (Items 3 or 3A) is fitted in the concealed space or 12 in. OC when insulation (Items 3 or 3A) is fitted in the concealed space, draped over the furring channel/gypsum board ceiling membrane or 24 in. OC when insulation (Items 3 or 3A) is fitted in the concealed space, draped over the furring channel/gypsum board ceiling membrane and a second layer of gypsum board is attached as described in Item 7 for steel framing members. Channels secured to trusses as described in Item 6Ab. Ends of adjoining channels overlapped 6 in. and tied together with double strand of No. 18 SWG galv steel wire near each end of overlap.

b. Steel Framing Members — Used to attach furring channels (Item a) to trusses (Item 2). Clips spaced 48 in. OC. RSIC-1 and RSIC-1 (2.75) clips secured to alternating trusses with No. 8 by 2-1/2 in. coarse drywall screw through the center grommet. RSIC-V and RSIC-V (2.75) clips secured to alternating trusses with No. 8 by 1-1/2 in. coarse drywall screw through the center hole. Furring channels are friction fitted into clips. RSIC-1 and RSIC-V clips for use with 2-9/16 in. wide furring channels. RSIC-1 (2.75) and RSIC-V (2.75) clips for use with 2-23/32 in. wide furring channels. Adjoining channels are overlapped as described in Item 6Aa. As an alternate, ends of adjoining channels may be overlapped 6 in. and secured together with two self-tapping No. 6 framing screws, min. 7/16 in. long at the midpoint of the overlap, with one screw on each flange of the channel. Additional clips required to hold furring channel that supports the gypsum board butt joints, as described in Item 7.

PAC INTERNATIONAL INC — Types RSIC-1, RSIC-V, RSIC-1 (2.75), RSIC-V (2.75).

6B. **Steel Framing Members* —** (Not Shown) - As an alternate to Items 6 and 6A.

a. **Furring Channels —** Hat-shaped furring channels, 7/8 in. deep by 2-5/8 in. wide at the base and 1-1/4 in. wide at the face, formed from No. 25 ga. galv steel, spaced max 16 in. OC perpendicular to trusses and Cold Rolled Channels (Item 6Bb). Furring channels secured to Cold Rolled Channels at every intersection with a 1/2 in. pan head self-drilling screw through each furring channel leg. Ends of adjoining channels overlapped 4 in. and tied together with two double strand No. 18 SWG galv steel wire ties, one at each end of overlap. Supplemental furring channels at base layer and outer layer gypsum board butt joints are not required. Batts and Blankets draped over furring channels as described in Item 3. Two layers of gypsum board attached to furring channels as described in Item 7.

b. **Cold Rolled Channels —** 1-1/2 in. by 1/2 in., formed from No. 16 ga. galv steel, positioned vertically and parallel to trusses, friction-fitted into the channel caddy on the Steel Framing Members (Item 6Bd). Adjoining lengths of cold rolled channels lapped min. 6 in. and wire-tied together with two double strand 18 SWG galv steel wire ties, one at each end of overlap.

c. **Blocking —** Where truss design does not permit direct, full contact of the hanger bracket, a piece of nominal 2 by 4 in. lumber (blocking), min. 6 in. long to permit full contact of the hanger bracket, to be secured vertically to the side of the truss (Item 2) at the top and bottom of the blocking at each Steel Framing Member (Item 6Bd) location.

d. **Steel Framing Members* —** Hangers spaced 48 in. OC. max along truss, and secured to the Blocking (Item 6Bc) on alternating trusses with a single 5/16 in. by 2 in. hex head lag bolt or four #6 1-1/4 in. drywall screws through mounting hole(s) on the hanger bracket. The two 1/4 in. long steel teeth on the hanger are embedded in the side of the blocking. Hanger positioned on blocking and leveling bolt height adjusted such that furring channels are flush with bottom of trusses before gypsum board installation. Spring gauge of hanger chosen per manufacturer's instructions.

KINETICS NOISE CONTROL INC — Type ICW.

6C. **Steel Framing Members* —** (Not Shown) - As an alternate to Items 6, 6A and 6B.

a. **Furring Channels —** Formed of No. 25 MSG galv steel, 2-3/8 in. wide by 7/8 in. deep installed perpendicular to wood structural members. Channels spaced a max of 24 in. OC when no insulation (Item 3 or 3A) is fitted in the concealed space or a max of 12 in. OC when insulation (Item 3 or 3A) is fitted in the concealed space. Channels secured to trusses as described in Item 6Cb. Ends of adjoining channels overlapped 6 in. and tied together with double strand of No. 18 AWG galvanized steel wire near each end of overlap.

b. **Steel Framing Members* —** Used to attach furring channels (Item 6Ca) to trusses (Item 2). Clips secured to the bottom chord of each truss (24 in. OC) with one No. 8 by 2-1/2 in. long coarse drywall screw through center grommet. Furring channels are friction fitted into clips. Adjoining channels are overlapped as described in Item 6Ca. As an alternate, ends of adjoining channels may be overlapped 6 in. and secured together with two self-tapping No. 6 framing screws, min 7/16 in. long at the midpoint of the overlap, with one screw on each flange of the channel. Additional clips required to hold furring channel that supports the gypsum board butt joints, as described in Item 7.

PLITEQ INC — Type Genie Clip

6D. **Steel Framing Members* —** (Not Shown) - As an alternate to Items 6, 6A, 6B and 6C.

a. **Main runners —** Installed perpendicular to trusses — Nom 10 or 12 ft long, 15/16 in. or 1-1/2 in. wide face, spaced 4 ft OC. Main runners hung a min of 2 in. from bottom chord of trusses with 12 SWG galv steel wire. Wires located a max of 48 in. OC.

b. **Cross tees or channels —** Nom 4 ft long, 15/16 in. or 1-1/2 in. wide face or cross channels, nom 4 ft long, 1-1/2 wide face, installed perpendicular to the main runners, spaced 16 in. OC. Additional cross tees or channels used at 8 in. from each side of butted gypsum board end joints. The cross tees or channels may be riveted or screw-attached to the wall angle or channel to facilitate the ceiling installation.

c. **Wall angles or channels —** Used to support steel framing member ends and for screw-attachment of the gypsum wallboard — Min 0.016 in. thick painted or galvanized steel angle with 1 in. legs or min. 0.016 in. thick painted or galvanized steel channel with a 1 by 1-1/2 by 1 in. profile, attached to walls at perimeter of ceiling with fasteners 16 in. OC
.
CGC INC — Type DGL or RX.
USG INTERIORS LLC — Type DGL or RX.

6E. **Alternate Steel Framing Members —** (Not Shown)* - As an alternate to items 6, 6A, 6B, and 6C, furring channels and Steel Framing Members as described below.

a. **Furring Channels —** Formed of No. 25 MSG galv steel, 2-5/8 in. wide by 7/8 in deep, spaced 24 in OC, perpendicular to trusses. When insulation, Items 3 or 3A is used, the furring channel spacing shall be reduced to 12 in. OC. Channels secured to joists as described in Item b.

b. **Steel Framing Members* —** Used to attach furring channels (Item a) to the wood trusses (Item 2). Clips spaced at 24" OC and secured to the bottom of the trusses with one No. 10 x 2-1/2 Coarse Drywall Screw through the center hole. Furring channels are then friction fitted into clips. Ends of channels are overlapped 6" and screwed with four No. 8 x 1/2 Self Drilling screws (2 per side 1 in. and 4 in. from overlap edge). Additional clips are required to hold the Gypsum Butt joints and side joints as described in Item 7.

STUDCO BUILDING SYSTEMS — RESILMOUNT Sound Isolation Clips - Type A237 or A237R

6F. **Steel Framing Members* —** (Not Shown) - As an alternate to Items 6 through 6E- Not for use with Items 3 or 3A. Main runners nom 12 ft long, spaced 72 in. OC. Main runners suspended by min 12 SWG galv steel hanger wires spaced 48 in. OC. Cross tees, nom 6 ft long, installed perpendicular to main runners and spaced 24 in. OC. Additional 6 ft long cross tees required at each gypsum board end joint with butted gypsum board end joints centered between cross tees spaced 8 in. OC. The main runners and cross tees may be riveted or screw attached to the wall angle or channel to facilitate the ceiling installation.

USG INTERIORS LLC — Type DGL or RX

7. **Gypsum Board* —** One layer of nom 5/8 in. thick by 48 in. wide boards, installed with long dimension parallel to trusses. Attached to the resilient channels using 1 in. long Type S bugle-head screws. Screws spaced a max of 12 in. OC along butted end-joints and in the field when no insulation (Item 3 or 3A) is fitted in the concealed spaced, or a max of 8 in. OC along butted end-joints and in the field when insulation (Item 3 or 3A) is fitted in the concealed space, draped over the resilient channel/gypsum board ceiling membrane.

When **Steel Framing Members*** (Item 6A or 6C) are used, sheets installed with long dimension perpendicular to furring channels and side joints of sheet located beneath trusses. Gypsum board screws are driven through channel spaced 12 in. OC in the field when no insulation (Item 3 or 3A) is fitted in the concealed space, or 8 in. OC in the field when insulation (Item 3 or 3A) is fitted in the concealed space, draped over the furring channel/gypsum board ceiling membrane. Gypsum board butt joints shall be staggered min. 2 ft within the assembly, and occur between the main furring channels. At the gypsum board butt joints, each end of the gypsum board shall be supported by a single length of furring channel equal to the width of the wallboard plus 6 in. on each end. The furring channels shall be spaced approximately 3-1/2 in. OC, and be attached to the trusses with one clip at each end of the channel. Screw spacing along the butt joint to attach the gypsum board to the furring channels shall be 8 in. OC. Second (outer) layer of gypsum board required when furring channels (Item 6A, a) are spaced 24 in. OC and insulation is fitted in the concealed space, draped over the furring channel/gypsum board ceiling membrane. Outer layer of gypsum board attached to the furring channels using 1-5/8 in. long Type S bugle-head screws spaced 8 in. OC at butted joints and 12 in. OC in the field. Butted end joints of outer layer to be offset a minimum of 8 in. from base layer end joints. Butted side joints of outer layer to be offset minimum 18 in. from butted side joints of base layer.

When **Steel Framing Members** (Item 6B) are used, two layers of nom 5/8 in. thick, 4 ft wide gypsum board are installed with long dimensions perpendicular to furring channels (Item 6Ba). Base layer attached to the furring channels using 1 in. long Type S bugle head steel screws spaced 8 in. OC along butted end joints and 12 in. OC in the field of the board. Butted end joints centered on the continuous furring channels. Butted base layer end joints to be offset a min of 16 in. in adjacent courses. Outer layer attached to the furring channels using 1-5/8 in. long Type S bugle head steel screws spaced 8 in. OC at butted end joints and 12 in. OC in the field. Butted end joints centered on the continuous furring channels and offset a min of 16 in. from butted end joints of base layer. Butted side joints of outer layer to be offset min 16 in. from butted side joints of base layer.

When **Steel Framing Members** (Item 6C) are used, one layer of nom 5/8 in. thick, 4 ft wide gypsum board is installed with long dimensions perpendicular to furring channels. Gypsum board secured to furring channels with nom 1 in. long Type S bugle-head steel screws spaced 8 in. OC in the field of the board. Gypsum board butted end joints shall be staggered minimum 72 in. At the gypsum board butt joints, each end of each gypsum board shall be supported by a single length of furring channel equal to the width of the gypsum board plus 3 in. on each end, spaced approximately 2 in. in from joint. Screw spacing along the gypsum board butt joint shall be 8 in. OC. Butt joint furring channels shall be attached with a RESILMOUNT Sound Isolation Clip secured to underside of every truss that is located over the butt joint. Over all Gypsum Board side joints, approximately 20 in. lengths of furring channel shall be installed parallel to trusses (Item 2) between main furring channels. Side joint furring channels shall be attached to underside of the joist with RESILMOUNT Sound Isolation Clips - located approximately 2 in. from each end of the approximate 20 in. length of channel. Both Gypsum Boards at side joints fastened into channel with screws spaced 8 in. OC, approximately 1/2 in. from joint edge.

When alternate **Steel Framing Members*** (Item 6F) are used, one layer of nom 5/8 in. thick, 4 ft wide gypsum board sheets installed with long dimension (side joints) perpendicular to the 6 ft long cross tees with the end joints staggered min 4 ft and centered between cross tees which are spaced 8 in. OC. Gypsum board side joints may occur beneath or between main runners. Prior to installation of the gypsum board sheets, backer strips consisting of nom 7-3/4 in. wide pieces of gypsum board are to be laid atop the cross tee flanges and centered over each butted end joint location. The backer strips are to be secured to the flanges of the cross tees at opposite corners of the backer strip with hold down clips to prevent the backer strips from being uplifted during screw-attachment of the gypsum board sheets. Gypsum board fastened to cross tees with 1 in. drywall screws spaced 1 in. and 4 in. from the side joints and max 8 in. OC in the field of the board. The butted end joints are to be secured to the backer strip with No. 10 by 1-1/2 in. long Type G laminating screws located 1 in. from each side of the butted end joint and spaced 1 in. and 4 in. from the side joints and max 8 in. OC in the field of the board.

CGC INC — Types C, IP-X2, IPC-AR.
UNITED STATES GYPSUM CO — Types C, IP-X2, IPC-AR.
USG MEXICO S A DE C V — Types C, IP-X2, IPC-AR.

7A. **Gypsum Board* —** For use with Steel Framing Members (Item 6D) when Batts and Blankets* (Item 3) are not used - One layer of nom 5/8 in. thick by 48 in. wide boards, installed with long dimension parallel to the main runners. Gypsum board fastened to each cross tee or channel with five wallboard screws, with one screw located at the midspan of the cross tee or channel, one screw located 12 in. from and on each side of the cross tee or channel mid span and one screw located 1-1/2 in. from each gypsum board side joint. Except at wallboard end joints, wallboard screws shall be located on alternating sides of cross tee flange. At gypsum board end joints, gypsum board screws shall be located 1/2 in. from the joint. Gypsum board fastened to main runners with wallboard screws 1/2 in. from side joints, midway between intersections with cross tees or channels (16 in. OC). End joints of adjacent gypsum board sheets shall be staggered not less than 32 in. Gypsum board sheets screw attached to leg of wall angle with wallboard screws spaced 12 in. OC. Joints treated as described in Item 7. For use with **Steel Framing Members*** (Item 6D) when **Batts and Blankets*** (Item 3) are used - Ratings limited to 1 Hour - 5/8 in. thick, 4 ft wide; installed with long dimension perpendicular to cross tees with side joints centered along main runners and end joints centered along cross tees. Fastened to cross tees with 1 in. long steel gypsum board screws spaced 8 in. OC in the field and 8 in. OC along end joints. Fastened to main runners with 1 in. long gypsum board screws spaced midway between cross tees. Screws along sides and ends of boards spaced 3/8 to 1/2 in. from board edge. End joints of the sheets shall be staggered with spacing between joints on adjacent boards not less than 4 ft OC.

CGC INC — Type C or IP-X2.
UNITED STATES GYPSUM CO — Type C or IP-X2.
USG MEXICO S A DE C V — Type C or IP-X2.

8. **Finishing System —** (Not Shown) — Vinyl, dry or premixed joint compound, applied in two coats to joints and screw-heads; paper tape, 2 in. wide, embedded in first layer of compound over all joints. As an alternate, nom 3/32 in. thick veneer plaster may be applied to the entire surface of gypsum board. **Alternate Ceiling Membrane —** Not Shown.

9. **Netting —** Fibrous, woven netting material fastened to underside of each joist with staples, with side joints overlapped.

*** Indicates such products shall bear the UL or cUL Certification Mark for jurisdictions employing the UL or cUL Certification (such as Canada), respectively.**

Last Updated on 2014-06-17

H1 UL P522 - SIMILAR
NTS

ISSUE HISTORY

No.	Date	Description
1	04/15/2022	PERMIT SUBMITTAL

REVISION HISTORY

No.	Date	Description

FUGLEBERG KOCH

2555 Temple Trail, Winter Park, FL 32789 (407) 629-0595
www. fuglebergkoch.com AA26002103

CONSULTANT

MICHAEL GOVE
8234

THE ROBERT MADISON MADISON, ALABAMA	Drawn:	MB
	Checked:	JK
	Approval:	MG
	Date:	04/15/2022
	Project #:	5722

UL REFERENCE DIRECTORY ROOF SYSTEMS

A0.31

PLOTTED: 5/3/2022 3:18:25 PM

© 2018 These documents and their contents are the property of FUGLEBERG KOCH - AA26002103, and are issued only for the specific project noted on these drawings. Any reproductions, revisions, or modifications of these documents without the expressed written consent of Fugleberg Koch is prohibited by law.

Design No. U356

August 19, 2019

Bearing Wall Rating - 1 Hr Rating Exposed to Fire on Interior Face Only
Bearing Wall Rating — 1 Hr Rating Exposed to Fire on Exterior Face (See Item 6E)
Finish Rating — 23 Min or 25 Min (See Item 2C)
This design was evaluated using a load design method other than the Limit States Design Method (e.g., Working Stress Design Method). For jurisdictions employing the Limit States Design Method, such as Canada, a load restriction factor shall be used

*** Indicates such products shall bear the UL or cUL Certification Mark for jurisdictions employing the UL or cUL Certification (such as Canada), respectively.**

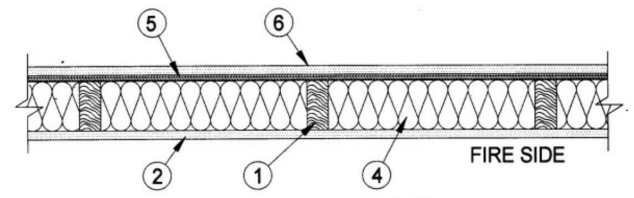

HORIZONTAL SECTION

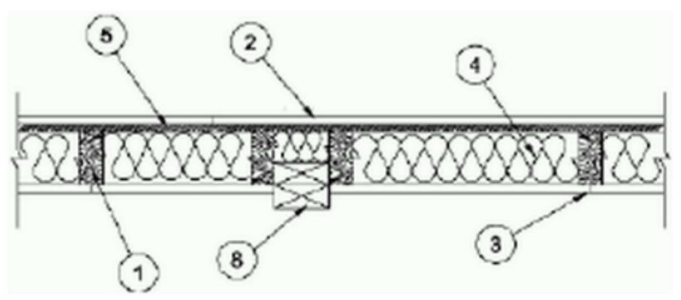

1. **Wood Studs —** Nom 2 by 4 in. spaced 16 in. OC with two 2 by 4 in. top and one 2 by 4 in. bottom plates. Studs laterally-braced by wood structural panel sheathing (Item 5). When **Mineral and Fiber Boards*** (Item 5A) are considered as bracing for the studs, the load is restricted to 76% of allowable axial load. Walls effectively fire stopped at top and bottom of wall.
2. **Gypsum Board* — Any 5/8 in. thick UL Classified Gypsum Board that is eligible for use in Design Nos. L501, G512 or U305.** Nom 5/8 in. thick, 4 ft wide, applied vertically and nailed to studs and bearing plates 7 in. OC with 6d cement-coated nails, 1-7/8 in. long with 1/4 in. diam head.
When Item 7, 7B, 7C, 7D or 7E **Steel Framing Members***, is used, gypsum panels attached to furring channels with 1 in. long Type S bugle-head steel screws spaced 12 in. OC.
When Item 7A **Steel Framing Members***, is used, two layers of gypsum panels attached to furring channels. Base layer attached to furring channels with 1 in. long Type S bugle-head steel screws spaced 12 in. OC. Face layer attached to furring channels with 1-5/8 in. long Type S bugle-head steel screws spaced 12 in. OC. All joints in face layers staggered with joints in base layers.
CABOT MANUFACTURING ULC — CKNX.R25370
AMERICAN GYPSUM CO — CKNX.R14196
BEIJING NEW BUILDING MATERIALS PUBLIC LTD CO — CKNX.R19374
CERTAINTEED GYPSUM INC — CKNX.R3660
CGC INC — CKNX.R19751
CONTINENTAL BUILDING PRODUCTS OPERATING CO, L L C — CKNX.R18482
GEORGIA-PACIFIC GYPSUM L L C — CKNX.R2717
LOADMASTER SYSTEMS INC — CKNX.R11809
NATIONAL GYPSUM CO — CKNX.R3501
PABCO BUILDING PRODUCTS L L C, DBA PABCO GYPSUM — CKNX.R7094
PANEL REY S A — CKNX.R21796
SIAM GYPSUM INDUSTRY (SARABURI) CO LTD — CKNX.R19262
THAI GYPSUM PRODUCTS PCL — CKNX.R27517
UNITED STATES GYPSUM CO — CKNX.R1319
USG BORAL DRYWALL SFZ LLC — CKNX.R38438
USG MEXICO S A DE C V — CKNX.R16089
2A. **Gypsum Board* —** (As an alternate to Item 2, Not Shown) — Any 5/8 in. thick 4 ft wide gypsum panels that are eligible for use in Design Nos. L501, G512 or U305, supplied by the Classified Companies listed below shown in the **Gypsum Board*** (CKNX) category. Applied vertically and attached to studs and bearing plates with 1-1/4 in. long Type W coarse thread gypsum panel steel screws spaced a max 8 in. OC, with last screw 1 in. from edge of board.
CGC INC
UNITED STATES GYPSUM CO
USG BORAL DRYWALL SFZ LLC
USG MEXICO S A DE C V
2B. **Gypsum Board* —** (As an alternate to Item 2, Not Shown) — 5/8 in. thick 4 ft wide gypsum panels applied vertically and attached to studs and bearing plates with 1-1/4 in. long Type W coarse thread gypsum panel steel screws spaced a max 8 in. OC, with last screw 1 in. from edge of board.
CABOT MANUFACTURING ULC — Type X, 5/8 Type X, Type Blueglass Exterior Sheathing
AMERICAN GYPSUM CO — Types AGX-1, M-Glass, AG-C, LightRoc
CERTAINTEED GYPSUM INC — Type C, Type X, Type X-1, Easi-Lite Type X-2
GEORGIA-PACIFIC GYPSUM L L C — Types X, Veneer Plaster Base-Type X, Water Rated-Type X, Sheathing Type-X, Soffit-Type X, Type X ComfortGuard Sound Deadening Gypsum Board.
PABCO BUILDING PRODUCTS L L C, DBA PABCO GYPSUM — Types PG-11, PGS-WRS.
THAI GYPSUM PRODUCTS PCL — Type C or Type X
2C. **Gypsum Board* —** (As an alternate to Item 2, Not Shown) — For Use with Item 5A only - 5/8 in. thick 4 ft wide gypsum panels applied horizontally and attached to studs and bearing plates with 1-1/4 in. long Type W coarse thread gypsum panel steel screws spaced a max 8 in. OC, with last screws 1 in.and 4 in. from edges of board. Finish Rating is 25 min.
CABOT MANUFACTURING ULC — 5/8 Type X, Type Blueglass Exterior Sheathing
GEORGIA-PACIFIC GYPSUM L L C — Type X, Veneer Plaster Base-Type X, Water Rated-Type X, Sheathing Type-X, Soffit-Type X
PABCO BUILDING PRODUCTS L L C, DBA PABCO GYPSUM — Types PG-11, PGS-WRS
2D. **Gypsum Board* —** (As an alternate to Item 2) — Not to be used with item 7. 5/8 in. thick, 4 ft. wide, paper surfaced, applied vertically only and fastened to the studs and plates with 6d cement coated nails 1-7/8 in. long, 0.0915 in. shank diam and 1/4 in. diam heads, 7 in. OC.
NATIONAL GYPSUM CO — SoundBreak XP Type X Gypsum Board
2E **Gypsum Board* —** (As an alternate to Items 2 through 2D) — Nominal 5/8 in. thick, 4 ft wide panels, secured as described in Item 2.
PABCO BUILDING PRODUCTS L L C, DBA PABCO GYPSUM — Type QuietRock ES.
2F. **Gypsum Board* —** (As an alternate to Item 2) — Not to be used with item 7. 5/8 in. thick, 4 ft. wide, paper surfaced, applied vertically or horizontally and fastened to the studs and plates with 1-1/4 in. long Type W coarse thread gypsum panel steel screws spaced a max 8 in. OC, with last screw 1 in. from edge of board.
CERTAINTEED GYPSUM INC — Type SilentFX
2G. **Wall and Partition Facings and Accessories* —** (As an alternate to Items 2 through 2F) — Nominal 5/8 in. thick, 4 ft wide panels, secured as described in Item 2.
PABCO BUILDING PRODUCTS L L C, DBA PABCO GYPSUM — Type QuietRock 527.
2H. **Gypsum Board* —** (As an alternate to Item 2) — 5/8 in. thick gypsum panels, with beveled, square, or tapered edges, applied either horizontally or vertically. Gypsum panels fastened to framing with 1-1/4 in. long Type W coarse thread gypsum panel steel screws spaced a maximum 10 in. OC with the last two screws 4 and 1 in. from the edges of the board. When used in widths other than 48 in., gypsum panels are to be installed horizontally.
CONTINENTAL BUILDING PRODUCTS OPERATING CO, L L C — Type LGFC6A (finish rating 21 min), Type LGFC2A, Type LGFC-C/A, Type LGFC-WD, Type LGLLX
2I. **Gypsum Board* —** (As an alternate to Item 2) — 5/8 in. thick gypsum panels, with beveled, square, or tapered edges, applied either horizontally or vertically. Gypsum panels fastened to framing with 1-1/4 in. long Type W coarse thread gypsum panel steel screws spaced a max 8 in. OC, with last screw 1 in. from edge of board. When used in widths of other than 48 in., gypsum boards are to be installed horizontally.
AMERICAN GYPSUM CO — Types AGX-1 (finish rating 25 min.), M-Glass (finish rating 25 min.), AG-C (finish rating 25 min.), LightRoc (finish rating 25 min.)
NATIONAL GYPSUM CO — Type FSK, Type FSK-G, Type FSW, Type FSW-3, Type FSW-5, Type FSW-G, Type FSK-C, Type FSW-C, Type FSMR-C, Type FSW-6, Type FSL
2J. **Gypsum Board* —** (As an alternate to Item 2) - 5/8 in. thick gypsum panels, with beveled, square, or tapered edges, applied either horizontally or vertically. Gypsum panels fastened to framing with 1-1/4 in. long Type W coarse thread steel screws spaced a max 8 in. OC with the last screw 1 in. from edge of board. When used in widths other than 48 in., gypsum boards are to be installed horizontally.
CERTAINTEED GYPSUM INC — Type C, Type X or Type X-1(finish rating 26 min), Easi-Lite Type X (finish rating 24 min), Easi-Lite Type X-2, Type EGRG or GlasRoc or GlasRoc Sheathing (finish rating 23 min)
3. **Joints and Fastener Heads —** (Not Shown) — Gypsum board joints covered with tape and joint compound. Fastener heads covered with joint compound.
4. **Batts and Blankets* —** Mineral fiber or glass fiber insulation, 3-1/2 in. thick, pressure fit to fill wall cavities between studs and plates. Mineral fiber insulation to be unfaced and to have a min density of 3 pcf. Glass fiber insulation to be faced with aluminum foil or kraft paper and to have a min density of 0.9 pcf (min R-13 thermal insulation rating).
See **Batts and Blankets*** (BKNV) Category in the Building Materials Directory and **Batts and Blankets*** (BZJZ) Category in the Fire Resistance Directory for names of Classified Companies.

4A. **Fiber, Sprayed* —** As an alternate to Batts and Blankets (Item 4) — Spray applied cellulose material. The fiber is applied with water to completely fill the enclosed cavity in accordance with the application instructions supplied with the product with a nominal dry density of 2.7 lb/ft³. Alternate Application Method: The fiber is applied without water or adhesive at a nominal dry density of 3.5 lb/ft³, in accordance with the application instructions supplied with the product.
U S GREENFIBER L L C — INS735& INS745 for use with wet or dry application. INS510LD, INS515LD, INS541LD, INS735, INS745, INS765LD, and INS770LD are to be used for dry application only.
4B. **Fiber, Sprayed* —** As an alternate to Item 4 and 4A — Spray applied cellulose material. The fiber is applied with water to completely fill the enclosed cavity in accordance with the application instructions supplied with the product. Nominal dry density of 4.58 lb/ft³.
NU-WOOL CO INC — Cellulose Insulation
4C. **Fiber, Sprayed* —** As an alternate to Batts and Blankets (Item 4) — Spray applied cellulose fiber. The fiber is applied with water to completely fill the enclosed cavity in accordance with the application instructions supplied with the product. The minimum dry density shall be 4.30 lbs/ft³.
INTERNATIONAL CELLULOSE CORP — Celbar-RL
4D. **Fiber, Sprayed* —** As an alternate to Batts and Blankets (Item 4) — Spray applied, granulated mineral fiber material. The fiber is applied with adhesive, at a minimum density of 4.0 pcf, to completely fill the enclosed cavity in accordance with the application instructions supplied with the product. See Fiber, Sprayed (CCAZ).
AMERICAN ROCKWOOL MANUFACTURING, LLC — Type Rockwool Premium Plus
5. **Wood Structural Panel Sheathing —** Min 7/16 in. thick, 4 ft wide wood structural panels, min grade "C-D" or "Sheathing". Installed with long dimension of sheet (strength axis) or face grain of plywood parallel with or perpendicular to studs. Vertical joints centered on studs. Horizontal joints backed with nom 2 by 4 in. wood blocking. Attached to studs on exterior side of wall with 6d cement coated box nails spaced 6 in. OC at perimeter of panels and 12 in. OC along interior studs.
5A. **Mineral and Fiber Boards* —** As an alternate to Item 5 - Min 1/2 in. thick, 4 ft wide sheathing, installed vertically to studs. Vertical joints centered on studs. Horizontal joints backed with nom 2 by 4 in. wood blocking. Attached to studs on exterior side of wall with 1-1/2 in. long galvanized roofing nails spaced 6 in. OC at perimeter of panels and 12 in. OC along interior studs. As an option a weather resistive barrier may be applied over the Mineral and Fiber Boards.
6. **Exterior Facings —** Installed in accordance with the manufacturer's installation instructions. One of the following exterior facings is to be applied over the sheathing:
A. **Vinyl Siding — Molded Plastic* —** Contoured rigid vinyl siding having a flame spread value of 20 or less.
See **Molded Plastic** (BTAT) category in the Building Materials Directory for names of manufacturers.
B. **Particle Board Siding —** Hardboard exterior sidings including patterned panel or lap siding.
C. **Wood Structural Panel or Lap Siding —** APA Rated Siding, Exterior, plywood, OSB or composite panels with veneer faces and structural wood core, per PS 1 or APA Standard PRP-108, including textured, rough sawn, medium density overlay, brushed, grooved and lap siding.
D. **Cementitious Stucco —** Portland cement or synthetic stucco systems with self-furring metal lath or adhesive base coat. Thickness from 3/8 to 3/4 in., depending on system.
E. **Brick Veneer —** Any type on nom 4 in. wide brick veneer. When brick veneer is used, the rating is applicable with exposure on either face. Brick veneer fastened with corrugated metal wall ties attached over sheathing to wood studs with 8d nail per tie: ties spaced not more than each sixth course of brick and max 32 in. OC horizontally. One in. air space provided between brick veneer and sheathing.
F. **Exterior Insulation and Finish System (EIFS) —** Nom 1 in. **Foamed Plastic*** insulation bearing the UL Classification Marking, attached over sheathing and finished with coating system, or Portland cement or synthetic stucco systems, in accordance with manufacturer's instructions. See **Foamed Plastic** (BRYX and CCVW) categories for names of Classified companies.
G. **Siding —** Aluminum or steel siding attached over sheathing to studs.
H. **Fiber-Cement Siding —** Fiber-cement exterior sidings including smooth and patterned panel or lap siding.
I. **Wall and Partition Facings and Accessories* —** Stone veneer is mortar bonded to a lath, scratch coat and water resistant barrier applied to sheathing, installed in accordance with the manufacturers installation instructions, and meeting the requirements of local code agencies.
ELDORADO STONE OPERATIONS L L C — Type Eldorado Stone
J. **Cementitious Backer Units —** 1/2 in. or 5/8 in., min. 32 in. wide.- Applied vertically or horizontally with vertical joints centered over studs. Fastened to studs and runners with cement board screws of adequate length to penetrate stud by a minimum 3/4 in., spaced a max of 8 in. OC. Horizontal joints need not be backed by framing. When Cementitious Backer Units are used, the rating is applicable with exposure on either face. Cementitious Backer Units for use as substrate for exterior finishes such as ceramic tile, slate, marble, natural stone, manufactured stone, thin brick, or Portland cement or synthetic stucco.
NATIONAL GYPSUM CO — Type PermaBase
6A. **Building Units* — As an alternate to Exterior Facing Item 6 —** Insulated steel panels, 12 through 42 in. wide. Attached over sheathing through retainer clips to studs or support steel with No. 14 hex head self-tapping screws located at each joint in the concealed lip of the units and spaced in accordance with the structural design requirements. KINGSPAN INSULATED PANELS INC — Types 200, 300, 400, 900, or KS series, 2 through 6 in. thickness; CWP-V, H, 2 through 3 in. nominal thickness or Designwall 2000 or Designwall 4000, 2 and 3 in. nominal thickness.
7. **Steel Framing Members* —** (Optional, Not Shown) — Furring Channels and Steel Framing Members as described below:
a. **Furring Channels —** Formed of No. 25 MSG galv steel. 2-9/16 in. or 2-23/32 in. wide by 7/8 in. deep, spaced 24 in. OC perpendicular to studs. Channels secured to studs as described in Item b. Ends of adjoining channels are overlapped 6 in. and tied together with double strand of No. 18 SWG galv steel wire near each end of overlap. As an alternate, ends of adjoining channels may be overlapped 6 in. and secured together with two self-tapping #6 framing screws, min. 7/16 in. long at the midpoint of the overlap, with one screw on each flange of the channel. Gypsum board attached to furring channels as described in Item 2.
b. **Steel Framing Members* —** Used to attach furring channels (Item 7A) to studs. Clips spaced 48 in. OC., and secured to studs with No. 8 x 2-1/2 in. coarse drywall screw through the center grommet. Furring channels are friction fitted into clips. RSIC-1 clip for use with 2-9/16 in. wide furring channels. RSIC-1 (2.75) clip for use with 2-23/32 in. wide furring channels.
PAC INTERNATIONAL L L C — Types RSIC-1, RSIC-1 (2.75).
7A. **Steel Framing Members* —** (Optional, Not Shown) — Furring channels and Steel Framing Members as described below:
a. **Furring Channels —** Formed of No. 25 MSG galv steel, spaced 24 in. OC perpendicular to studs. Channels secured to studs as described in Item b. Ends of adjoining channels are overlapped 6 in. and tied together with double strand of No. 18 SWG galv steel wire near each end of overlap. Two layers of gypsum board attached to furring channels as described in Item 2.
b. **Steel Framing Members* —** Used to attach furring channels (Item 7Aa) to interior side of studs. Clips spaced 48 in. OC., and secured to studs with two No. 8 x 2-1/2 in. coarse drywall screws, one through the hole at each end of the clip. Furring channels are friction fitted into clips.
KINETICS NOISE CONTROL INC — Type Isomax.
7B. **Steel Framing Members* —** (Optional, Not Shown) — Furring channels and Steel Framing Members as described below:
a. **Furring Channels —** Formed of No. 25 MSG galv steel. 2-3/8 in. wide by 7/8 in. deep, spaced 24 in. OC perpendicular to studs. Channels secured to studs as described in Item b. Ends of adjoining channels are overlapped 6 in. and tied together with double strand of No. 18 SWG galv steel wire near each end of overlap. As an alternate, ends of adjoining channels may be overlapped 6 in. and secured together with two self-tapping #6 framing screws, min. 7/16 in. long at the midpoint of the overlap, with one screw on each flange of the channel. Gypsum board attached to furring channels as described in Item 2.
b. **Steel Framing Members* —** Used to attach furring channels (Item a) to studs. Clips spaced 48 in. OC. Genie clips secured to studs with No. 8 x 1-1/2 in. coarse drywall screw through the center hole. Furring channels are friction fitted into clips.
PLITEQ INC — Type Genie Clip
7C. **Steel Framing Members* —** (Optional, Not Shown) — Furring channels and Steel Framing Members as described below:
a. **Furring Channels —** Formed of No. 25 MSG galv steel. Spaced 24 in. OC perpendicular to studs. Channels secured to studs as described in Item b. Ends of adjoining channels overlapped 6 in. and tied together with double strand of No. 18 AWG galvanized steel wire.Gypsum board attached to furring channels as described in Item 2.
b. **Steel Framing Members* —** Used to attach furring channels (Item 7Ca) to studs. Clips spaced 48 in. OC., and secured to studs with 2 in. coarse drywall screw with 1 in. diam washer through the center hole. Furring channels are friction fitted into clips.
STUDCO BUILDING SYSTEMS — RESILMOUNT Sound Isolation Clips - Type A237R
7D. **Steel Framing Members* —** (Optional, Not Shown) — Furring channels and Steel Framing Members as described below:
a. **Furring Channels —** Formed of No. 25 MSG galv steel. Spaced 24 in. OC perpendicular to studs. Channels secured to studs as described in Item 7Db. Ends of adjoining channels overlapped 6 in. and tied together with double strand of No. 18 AWG galvanized steel wire. Gypsum board attached to furring channels as described in Item 2.
b. **Steel Framing Members* —** Used to attach furring channels (Item 7Da) to studs. Clips spaced 48 in. OC., and secured to studs with No. 8 x 2-1/2 in. coarse drywall screw through the center hole. Furring channels are friction fitted into clips.
REGUPOL AMERICA — Type SonusClip
7E. **Steel Framing Members* —** (Optional, Not Shown) — Resilient channels and Steel Framing Members as described below:
a. **Resilient Channels —** Formed of No. 25 MSG galv steel, spaced 24 in. OC, and perpendicular to studs. Channels secured to studs as described in Item b. Ends of adjoining channels overlapped 6 in. and secured in place with two No. 8 15 x 1/2 in. Philips Modified Truss screws spaced 2-1/2 in. from the center of the overlap. Gypsum board attached to resilient channels as described in Item 2.
b. **Steel Framing Members* —** Used to attach resilient channels (Item 7Ea) to studs. Clips spaced 48 in. OC., and secured to studs with No. 8 x 2-1/2 in. coarse drywall screw through the center hole. Resilient channels are secured to clips with one No. 10 x 1/2 in. pan-head self-drilling screw.
KEENE BUILDING PRODUCTS CO INC — Type RC+ Assurance Clip
8. **Non-Bearing Wall Partition Intersection —** (Optional) — Two nominal 2 by 4 in. stud or nominal 2 by 6 in. stud nailed together with two 3in. long 10d nails spaced a max. 16 in. OC. vertically and fastened to one side of the minimum 2 by 4 in. stud with 3 in. long 10d nails spaced a max 16 in. OC. vertically. Intersection between partition wood studs to be flush with the 2 by 4 in. studs. The wall partition wood studs are to be framed by with a second 2 by 4 in. wood stud fastened with 3 in. long 10d nails spaced a max. 16 in. OC. vertically. Maximum one non-bearing wall partition intersection per stud cavity. Non-bearing wall partition stud depth shall be at a minimum equal to the depth of the bearing wall.

Last Updated
2019-08-19

H3 **UL U356**
NTS

Design No. U905

June 10, 2019

Bearing Wall Rating — 2 HR.
Nonbearing Wall Rating — 2 HR
This design was evaluated using a load design method other than the Limit States Design Method (e.g., Working Stress Design Method). For jurisdictions employing the Limit States Design Method, such as Canada, a load restriction factor shall be used — See Guide HBXUV or BXUV7

*** Indicates such products shall bear the UL or cUL Certification Mark for jurisdictions employing the UL or cUL Certification (such as Canada), respectively.**

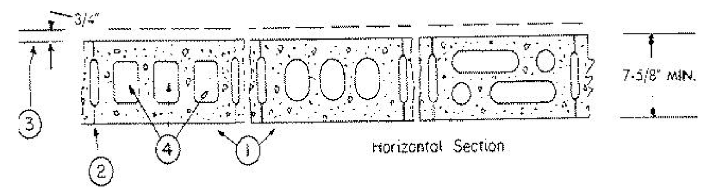

1. **Concrete Blocks* —** Various designs. Classification D-2 (2 hr).
See **Concrete Blocks** category for list of eligible manufacturers.
2. **Mortar —** Blocks laid in full bed of mortar, nom. 3/8 in. thick, of not less than 2-1/4 and not more than 3-1/2 parts of clean sharp sand to 1 part Portland cement (proportioned by volume) and not more than 50 percent hydrated lime (by cement volume). Vertical joints staggered.
3. **Portland Cement Stucco or Gypsum Plaster —** Add 1/2 hr to classification if used. Where combustible members are framed in wall, plaster or stucco must be applied on the face opposite framing to achieve a max. Classification of 1-1/2 hr. Attached to concrete blocks (Item 1).
4. **Loose Masonry Fill —** If all core spaces are filled with loose dry expanded slag, expanded clay or shale (Rotary Kiln Process), water repellant vermiculite masonry fill insulation, or silicone treated perlite loose fill insulation add 2 hr to classification.
5. **Foamed Plastic* —** (Optional-Not Shown) — 1-1/2 in. thick max, 4 ft wide sheathing attached to concrete blocks (Item 1).
ATLAS ROOFING CORP — "EnergyShield Pro Wall Insulation", "EnergyShield Pro 2 Wall Insulation", EnergyShield CGF Pro and EnergyShield Ply Pro
CARLISLE COATINGS & WATERPROOFING INC — Type R2+ SHEATHE
FIRESTONE BUILDING PRODUCTS CO L L C — "Enverge™ CI Foil Exterior Wall Insulation" and "Enverge™ CI Glass Exterior Wall Insulation"
HUNTER PANELS — Types "Xci-Class A", "Xci Foil (Class A)", "Xci 286"
RMAX OPERATING L L C — Types "TSX-8500", "ECOMAXci FR", "TSX-8510", "ECOMAXci FR White", "ECOMAXci", "ECOMAXci FR Air Barrier", "Thermasheath-XP", "Thermasheath", "Durasheath", "Thermasheath-3", "Durasheath-3".
THE DOW CHEMICAL CO — Types Thermax Sheathing, Thermax Light Duty Insulation, Thermax Heavy Duty Insulation, Thermax Metal Building Board, Thermax White Finish Insulation, Thermax ci Exterior Insulation, Thermax XARMOR ci Exterior Insulation, Thermax IH Insulation, Thermax Plus Liner Panel, Thermax Heavy Duty Plus (HDP) and TUFF-R™ ci Insulation
5A. **Building Units —** As an alternate to Items 5, min. 1-in thick polyisocyanurate composite foamed plastic insulation boards, nom. 48 by 48 or 96 in.
HUNTER PANELS — "Xci NB", "Xci Ply"
RMAX OPERATING L L C — "Thermasheath-SI", "ECOBASEci", "ThermaBase-CI", "ECOMAXci FR Ply", "ECOMAXci Ply".

*** Indicates such products shall bear the UL or cUL Certification Mark for jurisdictions employing the UL or cUL Certification (such as Canada), respectively.**

Last Updated on 2019-06-10

D5 **UL U905**
NTS

Design No. U341

June 14, 2019

Bearing Wall Rating — 1 Hr.
Finish Rating — Min 20 min.
This design was evaluated using a load design method other than the Limit States Design Method (e.g., Working Stress Design Method). For jurisdictions employing the Limit States Design Method, such as Canada, a load restriction factor shall be used

*** Indicates such products shall bear the UL or cUL Certification Mark for jurisdictions employing the UL or cUL Certification (such as Canada), respectively.**

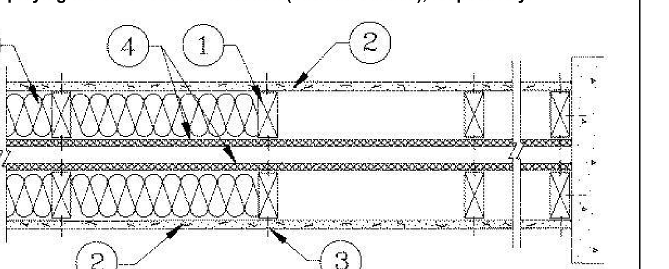

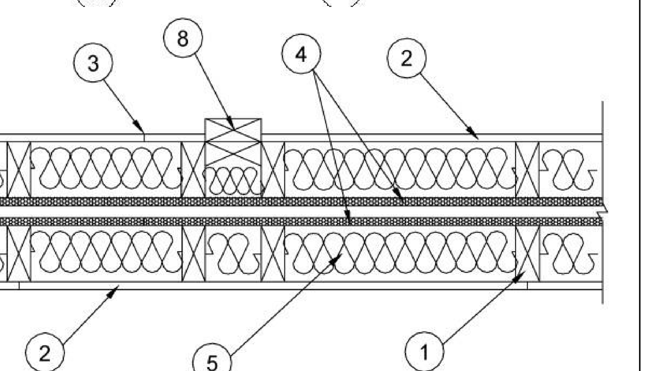

HORIZONTAL SECTION

1. **Wood Studs —** Nom 2 by 4 in., spaced 24 in. OC max. Cross braced at mid-height and effectively firestopped at top and bottom of wall. No min. air space between stud rows except to accommodate attachment of sheathing, where required. See items 4 and 5.

2. **Gypsum Board* — Any 5/8 in. thick UL Classified Gypsum Board that is eligible for use in Design Nos. L501, G512 or U305.** Nom 5/8 in. thick 4 ft wide. Gypsum board applied horizontally or vertically, unless specified below, and nailed to studs and bearing plates 7 in. OC with 6d cement coated nails, 1-7/8 in. long, 0.0915 in. shank diam and 1/4 in. diam head. As an alternate, No. 6 bugle head drywall screws, 1-7/8 in. long, may be substituted for the 6d cement coated nails.
When **Steel Framing Members*** (Item 6-6C) are used, wallboard attached to furring channels with 1 in. long Type S bugle-head steel screws spaced 12 in. OC.
When used in widths other than 48 in., gypsum board to be installed horizontally.

CABOT MANUFACTURING ULC — CKNX.R25370
AMERICAN GYPSUM CO — CKNX.R14196
BEIJING NEW BUILDING MATERIALS PUBLIC LTD CO — CKNX.R19374
CERTAINTEED GYPSUM INC — CKNX.R3660
CONTINENTAL BUILDING PRODUCTS OPERATING CO, L L C — CKNX.R18482
GEORGIA-PACIFIC GYPSUM L L C — CKNX.R2717
LOADMASTER SYSTEMS INC — CKNX.R11809
NATIONAL GYPSUM CO — CKNX.R3501
PABCO BUILDING PRODUCTS L L C, DBA PABCO GYPSUM — CKNX.R7094
PANEL REY S A — CKNX.R21796
SIAM GYPSUM INDUSTRY (SARABURI) CO LTD — CKNX.R19262
THAI GYPSUM PRODUCTS PCL — CKNX.R27517
UNITED STATES GYPSUM CO — CKNX.R1319
USG BORAL DRYWALL SFZ LLC — CKNX.R38438
USG BORAL DRYWALL SFZ LLC — CKNX.R38438
USG MEXICO S A DE C V — CKNX.R16089

2A. **Gypsum Board* —** (As an alternate to Item 2, not shown) — Nominal 5/8 in. thick, 4 ft wide panels, applied vertically to studs and bearing plates on one side of the assembly with 1-5/8 in. long Type S screws spaced 12 in. OC at perimeter of panels and 8 in. OC in the field. Horizontal joints of vertically applied panels need not be backed by studs. Panel joints covered with paper tape and two layers of joint compound. Screwheads covered with two layers of joint compound. Batts and Blankets placed in stud cavity as described in Item 5C. Not evaluated for use with Steel Framing Members, Furring Channels or Fiber, Sprayed.
PABCO BUILDING PRODUCTS L L C, DBA PABCO GYPSUM — Type QuietRock QR-530 (finish rating 23 min).

2B. **Gypsum Board* —** (As an alternate to Item 2, not shown) — Any 5/8 in. thick gypsum panels that are eligible for use in Design Nos. L501, G512 or U305, supplied by the Classified companies listed below shown in the **Gypsum Board*** (CKNX) category. Applied horizontally or vertically and attached to studs and bearing plates with 1-1/4 in. long Type W coarse thread gypsum panel steel screws spaced a max 8 in. OC, with last screw 1 in. from edge of board. When used in widths other than 48 in., gypsum board to be installed horizontally.

UNITED STATES GYPSUM CO
USG BORAL DRYWALL SFZ LLC
USG MEXICO S A DE C V

2C. **Gypsum Board* —** (As an alternate to Item 2, Not Shown) — 5/8 in. thick gypsum panels applied horizontally or vertically and attached to studs and bearing plates with 1-1/4 in. long Type W coarse thread gypsum panel steel screws spaced a max 8 in. OC, with last screw 1 in. from edge of board. When used in widths other than 48 in., gypsum board to be installed horizontally.

AMERICAN GYPSUM CO — Types AGX-1, M-Glass, AG-C, LightRoc
CERTAINTEED GYPSUM INC — Type C, Type X or Type X-1
NATIONAL GYPSUM CO — Type FSK, Type FSK-G, Type FSW, Type FSW-3, Type FSW-5, Type FSW-G, Type FSK-C, Type FSW-C, Type FSMR-C, Type FSW-6, Type FSL
THAI GYPSUM PRODUCTS PCL — Type C or Type X

2D. **Gypsum Board* —** (As an alternate to Items 2, 2A, 2B and 2C) — 5/8 in. thick gypsum panels, with square edges, applied either horizontally or vertically. Gypsum panels fastened to framing with 1-1/4 in. long Type W coarse thread gypsum panel steel screws spaced a max 8 in. OC, with last 2 screws 1 and 4 in. from edge of board or nailed as described in Item 2. When used in widths of other than 48 in., gypsum boards are to be installed horizontally.
GEORGIA-PACIFIC GYPSUM L L C — GreenGlass Type X, Type DGG.

2E. **Gypsum Board* —** (As an alternate to Items 2 through 2D) — 5/8 in. thick, 4 ft. wide, paper surfaced applied vertically only and secured as described in Item 2.
GEORGIA-PACIFIC GYPSUM L L C — Type X ComfortGuard Sound Deadening Gypsum Board.

2F. **Gypsum Board* —** (As an alternate to Items 2 through 2E) - Installed as described in Item 2. 5/8 in. thick, 4 ft. wide, paper surfaced, applied vertically only and fastened to the studs and plates with 6d cement coated nails 1-7/8 in. long, 0.0915 in. shank diam and 1/4 in. diam heads, 7 in. OC. Not for use with item #6.
NATIONAL GYPSUM CO — SoundBreak XP Type X Gypsum Board

2G. **Gypsum Board* —** (As an alternate to Items 2 through 2F) — Nominal 5/8 in. thick, 4 ft wide panels, applied vertically and secured as described in Item 2.
PABCO BUILDING PRODUCTS L L C, DBA PABCO GYPSUM — Types QuietRock ES.

2H. **Gypsum Board* —** (As an alternate to Items 2 through 2G) — Installed as described in Item 2. 5/8 in. thick, 4 ft. wide, paper surfaced, applied vertically or horizontally fastened to the studs and plates with 1-1/4 in. long Type W coarse thread gypsum panel steel screws spaced a max 8 in. OC, with last screw 1 in. from edge of board.
CERTAINTEED GYPSUM INC — Type SilentFX

2I. **Wall and Partition Facings and Accessories* —** (As an alternate to Items 2 through 2H) — Nominal 5/8 in. thick, 4 ft wide panels, applied vertically and secured as described in Item 2.
PABCO BUILDING PRODUCTS L L C, DBA PABCO GYPSUM — Type QuietRock 527.

2J. **Gypsum Board* —** (As an alternate to 5/8 in. Type FSW in Item 2) — 2 layers nom. 5/16 in. thick gypsum panels applied vertically or horizontally. Horizontal joints on the same side need not be staggered. Inner layer attached with fasteners, as described in item 2, spaced 24 in. OC. Outer layer attached per Item 2.
NATIONAL GYPSUM CO — Type FSW.

2K. **Gypsum Board* —** (As an alternate to Item 2) — 5/8 in. thick gypsum panels, with beveled, square, or tapered edges, applied either horizontally or vertically. Gypsum panels fastened to framing with 1-1/4 in. long Type W coarse thread gypsum panel steel screws spaced a maximum 10 in. OC with the last two screws 4 and 1 in. from the edges of the board. When used in widths other than 48 in., gypsum panels are to be installed horizontally.
CONTINENTAL BUILDING PRODUCTS OPERATING CO, L L C — Type LGFC6A (finish rating 21 min), Type LGFC2A, Type LGFC-C/A, Type LGFC-WD, Type LGLLX

3. **Joints and Nailheads —** Gypsum board joints of outer layer covered with tape and joint compound. Nail heads of outer layer covered with joint compound. As an alternate, nom 3/32 in. thick gypsum veneer plaster may be applied to the entire surface of Classified veneer baseboard with joints reinforced with paper tape.

4. **Sheathing —** (Optional) — Septum may be sheathed with min 7/16 in. thick wood structural panels min grade "C-D" or "Sheathing" or min 1/2 in. thick **Mineral and Fiber Boards***.
See **Mineral and Fiber Boards** (CERZ) category for names of Classified companies.
5. **Batts and Blankets* —** 3-1/2 in. max thickness glass or mineral fiber batt insulation. **Optional** when sheathing (Item 4) is used on both halves of wall.
See **Batts and Blankets** (BZJZ) category for list of Classified companies.
5A. **Fiber, Sprayed* —** As an alternate to Batts and Blankets (Item 5) — Spray applied cellulose material. The fiber is applied with water to completely fill the enclosed cavity in accordance with the application instructions supplied with the product with a nominal dry density of 2.7 lb/ft³. Alternate Application Method: The fiber is applied without water or adhesive at a nominal dry density of 3.5 lb/ft³, in accordance with the application instructions supplied with the product.
U S GREENFIBER L L C — INS735& INS745 for use with wet or dry application. INS510LD, INS515LD, INS541LD, INS735, INS745, INS765LD, and INS770LD are to be used for dry application only.
5B. **Fiber, Sprayed* —** As an alternate to Batts and Blankets (Item 5) when Sheathing (Item 4) is used on both halves of wall - Spray applied cellulose insulation material. The fiber is applied with water to interior surfaces in accordance with the application instructions supplied with the product. Applied to completely fill the enclosed cavity. Minimum dry density of 4.3 pounds per cubic ft.
NU-WOOL CO INC — Cellulose Insulation
5C. **Batts and Blankets* —** (Required for use with Wall and Partition Facings and Accessories, Item 2A. Use of Sheathing, Item 4, does not nullify requirement of Item 5C for use with Item 2A) — Glass fiber insulation, nom 3-1/2 in. thick, min. density of 0.80 pcf, with a flame spread of 25 or less and a smoke developed of 50 or less, friction-fitted to completely fill the stud cavities. See Batts and Blankets Category (BKNV) for names of manufacturers.
5D. **Fiber, Sprayed* —** As an alternate to Batts and Blankets (Item 5) and Item 5A when Sheathing (Item 4) is used on both halves of wall - Spray applied cellulose fiber. The fiber is applied with water to completely fill the enclosed cavity in accordance with the application instructions supplied with the product. The minimum dry density shall be 4.30 lbs/ft³.
INTERNATIONAL CELLULOSE CORP — Celbar-RL
5E. **Fiber, Sprayed* —** As an alternate to Batts and Blankets (Item 5) - Spray-applied cellulose material. The fiber is applied with water to completely fill the enclosed cavity in accordance with the application instructions supplied with the product. To facilitate the installation of the material, any thin, woven or non-woven netting may be attached by any means possible to the outer face the studs. The material shall reach equilibrium moisture content before the installation of materials on either face of the studs. The minimum dry density shall be 5.79 lbs/ft³.
APPLEGATE HOLDINGS L L C — Type 1 SAFE Applegate Fired Rated Material
6. **Steel Framing Members* —** (Optional, Not Shown) — Furring channels and Steel Framing Members as described below:
A. **Furring Channels —** Formed of No. 25 MSG galv steel. 2-9/16 in. or 2-23/32 in. wide by 7/8 in. deep, spaced 24 in. OC perpendicular to studs. Channels secured to studs as described in Item b. Ends of adjoining channels are overlapped 6 in. and tied together with double strand of No. 18 SWG galv steel wire near each end of overlap. As an alternate, ends of adjoining channels may be overlapped 6 in. and secured together with two self-tapping #6 framing screws, min. 7/16 in. long at the midpoint of the overlap, with one screw on each flange of the channel. Wallboard attached to furring channels as described in Item 2.
B. **Steel Framing Members* —** Used to attach furring channels (Item a) to studs (Item 1) . Clips spaced 48 in. OC., and secured to studs with No. 8 x 2-1/2 in. coarse drywall screw through the center grommet. Furring channels are friction fitted into clips. RSIC-1 clip for use with 2-9/16 in. wide furring channels. RSIC-1 (2.75) clip for use with 2-23/32 in. wide furring channels.
PAC INTERNATIONAL L L C — Types RSIC-1, RSIC-1 (2.75).
6A. **Steel Framing Members* —** (Optional, Not Shown) — Furring channels and Steel Framing Members as described below:
a. **Furring Channels —** Formed of No. 25 MSG galv steel. 2-3/8 in. wide by 7/8 in. deep, spaced 24 in. OC perpendicular to studs. Channels secured to studs as described in Item b. Ends of adjoining channels are overlapped 6 in. and tied together with double strand of No. 18 SWG galv steel wire near each end of overlap. As an alternate, ends of adjoining channels may be overlapped 6 in. and secured together with two self-tapping #6 framing screws, min. 7/16 in. long at the midpoint of the overlap, with one screw on each flange of the channel. Gypsum board attached to furring channels as described in Item 2.
b. **Steel Framing Members* —** Used to attach furring channels (Item a) to studs. Clips spaced 48 in. OC. Genie clips secured to studs with No. 8 x 1-1/2 in. coarse drywall screw through the center hole. Furring channels are friction fitted into clips.
PLITEQ INC — Type Genie Clip
6B. **Steel Framing Members* —** (Optional, Not Shown) — Furring channels and Steel Framing Members as described below:
a. **Furring Channels —** Formed of No. 25 MSG galv steel. Spaced 24 in. OC perpendicular to studs. Channels secured to studs as described in Item b. Ends of adjoining channels overlapped 6 in. and tied together with double strand of No. 18 AWG galvanized steel wire. Gypsum board attached to furring channels as described in Item 2.
b. **Steel Framing Members* —** Used to attach furring channels (Item 6Ba) to studs. Clips spaced 48 in. OC., and secured to studs with 2 in. coarse drywall screw with 1 in. diam washer through the center hole. Furring channels are friction fitted into clips.
STUDCO BUILDING SYSTEMS — RESILMOUNT Sound Isolation Clips - Type A237R

6C. **Steel Framing Members* —** (Optional, Not Shown) — Furring channels and Steel Framing Members as described below:
A. **Furring Channels —** Formed of No. 25 MSG galv steel. Spaced 24 in. OC perpendicular to studs. Channels secured to studs as described in Item 6Cb. Ends of adjoining channels overlapped 6 in. and tied together with double strand of No. 18 AWG galvanized steel wire. Gypsum board attached to furring channels as described in Item 2.
B. **Steel Framing Members* —** Used to attach furring channels (Item 6CA) to studs. Clips spaced 48 in. OC., and secured to studs with No. 8 x 2-1/2 in. coarse drywall screw through the center hole. Furring channels are friction fitted into clips.
REGUPOL AMERICA — Type SonusClip
6D. **Steel Framing Members* —** (Optional, Not Shown) — Resilient channels and Steel Framing Members as described below:
a. **Resilient Channels —** Formed of No. 25 MSG galv steel, spaced 24 in. OC, and perpendicular to studs. Channels secured to studs as described in Item b. Ends of adjoining channels overlapped 6 in. and secured in place with two No. 8 15 x 1/2 in. Philips Modified Truss screws spaced 2-1/2 in. from the center of the overlap. Gypsum board attached to resilient channels as described in Item 2.
b. **Steel Framing Members* —** Used to attach resilient channels (Item 6Da) to studs. Clips spaced 48 in. OC., and secured to studs with No. 8 x 2-1/2 in. coarse drywall screw through the center hole. Resilient channels are secured to clips with one No. 10 x 1/2 in. pan-head self-drilling screw.
KEENE BUILDING PRODUCTS CO INC — Type RC+ Assurance Clip
7. **Wall and Partition Facings and Accessories* —** (Optional, Not shown) — Nominal 1/2 in. thick, 4 ft wide panels, for optional use as an additional layer on one or both sides of the assembly. Panels attached in accordance with manufacturer's recommendations. When the QR-500 or QR-510 panel is installed between the wood framing and the UL Classified gypsum board, the required UL Classified gypsum board layer(s) is/are to be installed as indicated as to fastener type and spacing, except that the required fastener length shall be increased by a minimum of 1/2 in. Not evaluated or intended as a substitute for the required layer(s) of UL Classified Gypsum Board.
PABCO BUILDING PRODUCTS L L C, DBA PABCO GYPSUM — Type QuietRock QR-500 and QR-510
8. **Mineral and Fiber Board* —** ((Optional, Not Shown) — For optional use as an additional layer on one or both sides of wall. Nom 1/2 in. thick, 4 ft wide with long dimension parallel and centered over studs. Attached to framing as described in Item 2. The required UL Classified gypsum board layer(s) is/are to be installed as indicated as to fastener type and spacing, except that the required fastener length shall be increased by a minimum of 1/2 in. Not evaluated or intended as a substitute for the required layer(s) of UL Classified Gypsum Board.
HOMASOTE CO — Homasote Type 440-32
9. **Non-Bearing Wall Partition Intersection —** (Optional) — Two nominal 2 by 4 in. stud or nominal 2 by 6 in. stud nailed together with two 3in. long 10d nails spaced a max. 16 in. OC. vertically and fastened to one side of the minimum 2 by 4 in. stud with 3 in. long 10d nails spaced a max 16 in. OC. vertically. Intersection between partition wood studs to be flush with the 2 by 4 in. studs. The wall partition wood studs are to be framed by with a second 2 by 4 in. wood stud fastened with 3 in. long 10d nails spaced a max. 16 in. OC. vertically. Maximum one non-bearing wall partition intersection per stud cavity. Non-bearing wall partition stud depth shall be at a minimum equal to the depth of the bearing wall.
(Optional, Not Shown) Alternate Construction For Use On One Side Of The Wall.
10. **Mineral and Fiber Board* —** For use with Items 10A-10D) —Nom 1/2 in. thick, 4 ft wide with long dimension parallel and centered over studs. Attached to framing with minimum 1-3/8 in. long ring shanked nails or 1-1/4 in. long Type W steel screws, spaced 12 in. OC along board edges and 24 in. OC in field of board along intermediate framing. Not evaluated or intended as a substitute for the required layer(s) of UL Classified Gypsum Board.
HOMASOTE CO — Homasote Type 440-32
10A. **Glass Fiber Insulation —** (For use with Item 10) — 3-1/2 in. thick glass fiber batts bearing the UL Classification Marking as to Surface Burning and/or Fire Resistance, placed to fill the interior of the wall. See Batts and Blankets (BKNV or BZJZ) categories for names of Classified companies.
10B. **Batts and Blankets* —** (As an alternate to Item 10B, For use with Item 10), 3 in. thick mineral wool batts, placed to fill interior of wall, attached to the 3-1/2 in. face of the studs with staples placed 24 in. OC.
THERMAFIBER INC — Type SAFB, SAFB FF
10C. **Adhesive —** (For use with Item 10) — Construction grade adhesive applied in vertical, serpentine, nominal 3/8 in. wide beads down the length of both vertical edges of Mineral and Fiber Board (Item 14A).
10D. **Gypsum Board* —** (For use with Item 10) — 5/8 in. thick, 4 ft wide, applied vertically over Mineral and Fiber Board (Item 14A) with vertical joints located anywhere over stud cavities. Secured to mineral and fiber boards with 1-1/2 in. Type G Screws spaced 8 in. OC along edges of each vertical joint and 12 in. OC in intermediate field of the Mineral and Fiber Board (Item 10). Secured to outermost studs and bearing plates with 2 in. long Type S screws spaced 8 in. OC. Gypsum Board joints covered with paper tape and joint compound. Screw heads covered with joint compound. Finish Rating 30 Min.
AMERICAN GYPSUM CO — Type AG-C
CERTAINTEED GYPSUM INC — Type FRPC, Type C, Type X-2
CONTINENTAL BUILDING PRODUCTS OPERATING CO, L L C — Type LGFC-C/A
GEORGIA-PACIFIC GYPSUM L L C — Types 5, DAPC, TG-C
NATIONAL GYPSUM CO — Types FSK-C, FSW-C
PABCO BUILDING PRODUCTS L L C, DBA PABCO GYPSUM — Type PG-C
PANEL REY S A — Type PRC
THAI GYPSUM PRODUCTS PCL — Type C
UNITED STATES GYPSUM CO — Type CTypes C, IP-X2, IPC-AR
USG BORAL DRYWALL SFZ LLC — Type C
USG MEXICO S A DE C V — Types C, IP-X2, IPC-AR
*** Indicates such products shall bear the UL or cUL Certification Mark for jurisdictions employing the UL or cUL Certification (such as Canada), respectively.**

H5 **UL U341**
NTS

© 2018 These documents and their contents are the property of FUGLEBERG KOCH - AA26002103, and are issued only for the specific project noted on these drawings. Any reproductions, revisions, or modifications of these documents without the expressed written consent of Fugleberg Koch is prohibited by law.

ISSUE HISTORY		
No.	Date	Description
1	04/15/2022	PERMIT SUBMITTAL

REVISION HISTORY		
No.	Date	Description

FUGLEBERG KOCH
2555 Temple Trail, Winter Park, FL 32789 (407) 629-0595
www. fuglebergkoch.com AA26002103

CONSULTANT

STATE OF ALABAMA
MICHAEL E. GOVE
8234
4/15/22
REGISTERED ARCHITECT

MICHAEL GOVE
8234

THE ROBERT MADISON
MADISON, ALABAMA

Drawn:	MB
Checked:	JK
Approval:	MG
Date:	04/15/2022
Project #:	5722

UL REFERENCE DIRECTORY WALL SYSTEMS

A0.32

PLOTTED: 5/3/2022 3:18:27 PM

Design No. L528

May 23, 2019
Unrestrained Assembly Rating - 1 Hr.
Finish Rating - 22 Min.
This design was evaluated using a load design method other than the Limit States Design Method (e.g., Working Stress Design Method). For jurisdictions employing the Limit States Design Method, such as Canada, a load restriction factor shall be used — See Guide BXUV or BXUV7
*** Indicates such products shall bear the UL or cUL Certification Mark for jurisdictions employing the UL or cUL Certification (such as Canada), respectively.**

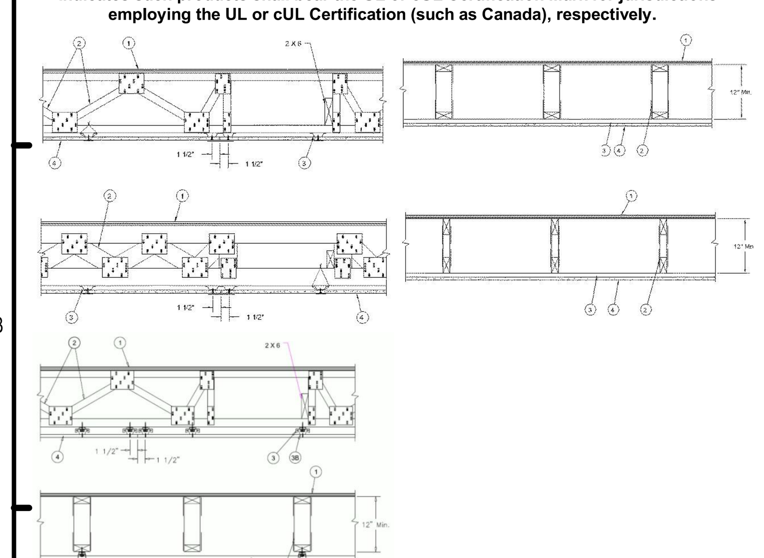

1. **Flooring System —** The flooring system shall consist of one of the following:
System No. 1
Subflooring — Min 23/32 in. thick T & G wood structural panels, min grade "Underlayment" or "Single-Floor". Face grain of plywood or strength axis of panels to be perpendicular to the trusses with end joints staggered 4 ft. Panels secured to trusses with construction adhesive and No. 6d ringed shank nails spaced 12 in. OC along each truss. TetraGRIP™ nails measuring 2-3/8 in. long, 0.113 in. diameter, 0.272 in. round head, and helically threaded shank with barbed features on the helix meeting ASTM F1667 and having equal or greater withdrawal and lateral resistance strength may be substituted for the 6d nails. Staples having equal or greater withdrawal and lateral resistance strength may be substituted for the 6d nails.
System No. 2
Subflooring — Min 23/32 in. thick T & G wood structural panels, min grade "Underlayment" or "Single-Floor". Face grain of plywood or strength axis of panels to be perpendicular to the trusses with end joints staggered 4 ft. Panels secured to trusses with construction adhesive and No. 6d ringed shank nails spaced 12 in. OC along each truss. TetraGRIP™ nails measuring 2-3/8 in. long, 0.113 in. diameter, 0.272 in. round head, and helically threaded shank with barbed features on the helix meeting ASTM F1667 and having equal or greater withdrawal and lateral resistance strength may be substituted for the 6d nails. Staples having equal or greater withdrawal and lateral resistance strength may be substituted for the 6d nails.
Vapor Barrier — (Optional) — Commercial asphalt saturated felt, 0.030 in. thick.
Vapor Barrier — (Optional) — Nom 0.010 in. thick commercial rosin-sized building paper.
Finish Flooring — Min 3/4 in. thickness of lightweight insulating concrete with **Perlite Aggregate*** or **Vermiculite Aggregate***, or gypsum concrete.
See **Perlite Aggregate** (CFFX) and **Vermiculite Aggregate** (CJZZ) categories for names of manufacturers.
System No. 3
Subflooring — Min 23/32 in. thick wood structural panels, min grade "C-D" or "Sheathing". Face grain of plywood or strength axis of panels to be perpendicular to the trusses with joints staggered.
Vapor Barrier — (Optional) — Commercial asphalt saturated felt, 0.030 in. thick.
Floor Mat Materials* — (Optional)— Floor mat material nom 5/64 in. (2 mm) thick adhered to subfloor with Hacker Floor Primer. Primer to be applied to the surface of the mat prior to the placement of a min 1 in. of floor-topping mixture.
ECORE INTERNATIONAL INC — Type QTscu 4002
HACKER INDUSTRIES INC — Type Hacker Sound-Mat.
Alternate Floor Mat Materials — (Optional) — Floor mat material nom 1/4 in. (6 mm) thick adhered to subfloor with Hacker Floor Primer. Primer to be applied to the surface of the mat prior to the placement of a min 1-1/4 in. (32 mm) of floor-topping mixture.
ECORE INTERNATIONAL INC — Type QTrbm 3006-3
HACKER INDUSTRIES INC — Type Hacker Sound-Mat II.
Alternate Floor Mat Materials — (Optional) — Floor mat material nom 1/8 in. (3 mm) thick loose laid over the subfloor. Floor topping thickness shall be a min of 3/4 in. (19 mm)
HACKER INDUSTRIES INC — FIRM-FILL SCM 125
Alternate Floor Mat Materials — (Optional) — Floor mat material nom 1/4 in. (6 mm) thick loose laid over the subfloor. Floor topping thickness shall be a min of 1 in. (25 mm)
HACKER INDUSTRIES INC — Type FIRM-FILL SCM 250, Quiet Qurl 55/025
Alternate Floor Mat Materials — (Optional) — Floor mat material nom 3/8 in. (10 mm) thick loose laid over the subfloor. Floor topping thickness shall be a min of 1-1/4 in. (32 mm)
HACKER INDUSTRIES INC — FIRM-FILL SCM 400, Quiet Qurl 60/040
Alternate Floor Mat Materials — (Optional) — Floor mat material nom 3/4 in. (19 mm) thick loose laid over the subfloor. Floor topping thickness shall be a min of 1-1/2 in. (38 mm)
HACKER INDUSTRIES INC — Type FIRM-FILL SCM 750, Quiet Qurl 65/075
Metal Lath — (Optional) — For use with 3/8 in. (10 mm) floor mat materials, 3/8 in. expanded steel diamond mesh, 3.4 lbs/sq yd placed over the floor mat material. Hacker Floor Primer to be applied prior to the placement of the metal lath. When metal lath is used, floor topping thickness a nom 1-1/4 in. over the floor mat.
Finish Flooring — Floor Topping Mixture* — Min 3/4 in. thickness of floor topping mixture having a min compressive strength of 1100 psi. Mixture shall consist of 6.8 gal of water to 80 lbs of floor topping mixture to 1.9 cu ft of sand.
HACKER INDUSTRIES INC — Firm-Fill Gypsum Concrete, Firm-Fill 2010, Firm-Fill 3310, Firm-Fill 4010, Firm-Fill High Strength, Gyp-Span Radiant
System No. 4
Subflooring — Min 23/32 in. thick wood structural panels, min grade "C-D" or "Sheathing". Face grain of plywood or strength axis of panels to be perpendicular to the trusses with joints staggered.
Vapor Barrier — (Optional) — Commercial asphalt saturated felt, 0.010 in. thick.
Finish Flooring — Floor Topping Mixture* — Min 3/4 in. thickness of floor topping mixture having a minimum compressive strength of 1800 psi. Refer to manufacturer's instructions accompanying the material for specific mix design.
UNITED STATES GYPSUM CO — Types LRK, HSLRK, CSD **LATICRETE SUPERCAP L L C** — Types LRK, HSLRK
USG MEXICO S A DE C V — Types LRK, HSLRK, CSD
Floor Mat Materials* — (Optional) — Floor mat material loose laid over the subfloor. Refer to manufacturer's instructions regarding the minimum thickness of floor topping over each floor mat material.
UNITED STATES GYPSUM CO — Types SAM, LEVELROCK® Brand Sound Reduction Board, LEVELROCK® Brand Floor Underlayment SRM-25
Alternate Floor Mat Materials* — (Optional) — Nom 3/8 in. thick floor mat material loose laid over the subfloor. Floor topping thickness shall be as specified under **Floor Topping Mixture.**
GRASSWORX L L C — Type SC50
Alternate Floor Mat Material* — (Optional) - Floor mat material nominal 3/8 in. thick loose laid over the subfloor. Floor topping shall be a min 3/4 in. thick.
System No. 5
Subflooring — Min 23/32 in. thick wood structural panels, min grade "C-D" or "Sheathing". Face grain of plywood or strength axis of panels to be perpendicular to the trusses with joints staggered.
Vapor Barrier — (Optional) — Commercial asphalt saturated felt, 0.030 in. thick.
Finish Flooring — Floor Topping Mixture* — Min 1-1/2 in. thickness of floor topping mixture having a min compressive strength of 1000 psi and a cast density of 100 plus or minus 5 pcf. Foam concentrate mixed 40:1 by volume with water and expanded at 100 psi through nozzle. Mixture shall consist of 1.4 cu feet of preformed foam concentrate to 94 lbs Type I Portland cement, 300 lbs of sand with 5-1/2 gal of water.
ELASTIZELL CORP OF AMERICA — Type FF
System No. 6
Subflooring — Min 23/32 in. thick wood structural panels, min grade "C-D" or "Sheathing". Face grain of plywood or strength axis of panels to be perpendicular to the trusses with joints staggered.
Vapor Barrier — (Optional) — Commercial asphalt saturated felt, 0.030 in. thick.
Finish Flooring — Floor Topping Mixture* — Min 1-1/2 in. thickness of floor topping mixture having a min compressive strength of 1000 psi and a cast density of 100 plus or minus 5 pcf. Foam concentrate mixed 40:1 by volume with water and expanded at 100 psi through nozzle. Mixture shall consist of 1.2 cu feet of preformed foam concentrate to 94 lbs Type I Portland cement, 300 lbs of sand with 5-1/2 gal of water.
AERIX INDUSTRIES — Floor Topping Mixture
System No. 7 Deleted.
System No. 8
Subflooring — Min 23/32 in. thick wood structural panels, min grade "C-D" or "Sheathing". Face grain of plywood or strength axis of panels to be perpendicular to the trusses with joints staggered.
Vapor Barrier — (Optional) — Commercial asphalt saturated felt, 0.030 in. thick.
Finish Flooring - Floor Topping Mixture* — Min 3/4 in. thickness of floor topping mixture having a minimum compressive strength of 1500 psi. Refer to manufacturer's instructions regarding the minimum thickness of floor topping over each floor mat material.
MAXXON CORP — Types D-C, GC, GC2000, L-R, T-F, CT, SS
RAPID FLOOR SYSTEMS — Types RF, RFP, RFU, Ortecrete
Floor Mat Materials* — (Optional) - Floor mat material loose laid over the subfloor. Refer to manufacturer's instructions regarding the minimum thickness of floor topping over each floor mat material.
MAXXON CORP — Type Acousti-Mat 1/8, Acousti-Mat 1/4, Acousti-Mat 1/4 Premium, Acousti-Mat 3/8, Acousti-Mat 3/8 Premium, Acousti-Mat 3/4, Acousti-Mat 3/4 Premium, Acousti-Top.
Floor Mat Reinforcement — (Optional) - Refer to manufacturer's instructions regarding minimum thickness of floor topping for use with floor mat reinforcement.
Metal Lath — (Optional) - 3/8 in. expanded galvanized steel diamond mesh, 3.4 lbs/sq yd loose laid over the floor mat material.
Fiber Glass Reinforcement - (Optional, Not Shown) - 0.015 in. thick PVC coated non-woven fiberglass mesh, 0.368 lbs/sq yd loose laid over the floor mat material.
System No. 9
Subflooring — Min 23/32 in. thick wood structural panels, min grade "C-D" or "Sheathing". Face grain of plywood or strength axis of panels to be perpendicular to the trusses with joints staggered.
Vapor Barrier — (Optional) — Commercial asphalt saturated felt, 0.030 in. thick.
Finish Flooring — Floor Topping Mixture* — Min 3/4 in. thickness of floor topping mixture having a min compressive strength of 1000 psi. Mixture shall consist of 5 to 8 gal of water to 80 lbs of floor topping mixture to 2.1 cu ft of sand.
ULTRA QUIET FLOORS — UQF-A, UQF-Super Blend, UQF-Plus 200
System No. 10
Subflooring — Min 23/32 in. thick wood structural panels, min grade "C-D" or "Sheathing". Face grain of plywood or strength axis of panels to be perpendicular to the trusses with joints staggered.
Vapor Barrier — (Optional) Commercial asphalt saturated felt, 0.030 in. thick.
Finish Flooring — Floor Topping Mixture* — Min 3/4 in. thickness of floor topping having a min compressive strength of 1000 psi. Refer to manufacturer's instructions accompanying the material for specific mix design.
FORMULATED MATERIALS LLC — Types FR-25, FR-30, and SiteMix
Alternate Floor Mat Material* — (Optional) Floor mat material nominal 2 - 9.5 mm thick loose laid over the subfloor. Floor topping shall be a min of 3/4 in.
FORMULATED MATERIALS LLC — Types M1, M2, M3, Elite, Duo, R1, and R2
System No. 11
Subflooring — Min 1 by 6 in. T & G lumber fastened diagonally to trusses, or min 15/32 in. thick plywood or min 7/16 in. thick oriented strand board (OSB) wood structural panels, min grade "C-D" or "Sheathing". Face grain of plywood or strength axis of panel to be perpendicular to trusses with joints staggered.
Finish Floor - Mineral and Fiber Board* — Min 1/2 in. thick, supplied in sizes ranging from 3 ft by 4 ft to 8 ft by 12 ft. All joints to be staggered a min of 12 in. with adjacent sub-floor joints.
HOMASOTE CO — Type 440-32 Mineral and Fiber Board
System No. 12
Subflooring — Min 23/32 in. thick wood structural panels, min grade "C-D" or "Sheathing". Face grain of plywood or strength axis of panels to be perpendicular to the trusses with joints staggered.
Vapor Barrier — (Optional) — Commercial asphalt saturated felt, 0.030 in. thick.
Finish Flooring — Floor Topping Mixture* — Min 3/4 in. thickness of floor topping having a min compressive strength of 1000 psi. Refer to manufacturer's instructions accompanying the material for specific mix design.
ACG MATERIALS Accu-Crete types NexGen, Green, Prime, B, M, and PrePour, AccuRadiant, AccuLevel types G40, G50 and SD30.
Alternate Floor Mat Material* — (Optional) — Floor mat material nominal 2 - 9.5 mm thick loose laid over the subfloor. Floor topping shall be a min of 3/4 in.
ACG MATERIALS — AccuQuiet types P80, C40, D13, D-18, D25, DX38, EM.125, EM.125S, EM.250, EM.250S, EM.375, EM.375S, EM.750, and EM.750S.
System No. 13
Subflooring — Min 15/32 in. thick wood structural panels, min grade "C-D" or "Sheathing". Face grain of plywood or strength axis of panels to be perpendicular to the joists with joints staggered.
Vapor Barrier — (Optional) — Commercial asphalt saturated felt, 0.030 in. thick.
Vapor Barrier — (Optional) — Nom 0.010 in. thick commercial rosin-sized building paper.
Finish Flooring* — Min 3/4 in. thickness of any Floor Topping Mixture bearing the UL Classification Marking as to Fire Resistance. See **Floor- and Roof-Topping Mixtures** (CCOX) category for names of Classified Companies.
Floor Mat Materials* — (Optional) Nom. 1/4 in. thick loose laid over the subfloor. Floor topping thickness shall be a minimum of 3/4 in.
KEENE BUILDING PRODUCTS CO INC — Type Quiet Qurl 55/025 and Quiet Qurl 55/025 N
Alternate Floor Mat Materials* — (Optional) — Floor mat material Nom. 3/8 in. thick loose laid over the subfloor. Floor topping thickness shall be a minimum of 1 in.
KEENE BUILDING PRODUCTS CO INC — Type Quiet Qurl 60/040 and Quiet Qurl 60/040 N
Alternate Floor Mat Materials* — (Optional) — Floor mat material Nom. 3/4 in. thick loose laid over the subfloor. Floor topping thickness shall be a minimum of 1-1/2 in.
KEENE BUILDING PRODUCTS CO INC — Type Quiet Qurl 65/075, Quiet Qurl 65/075 N
Alternate Floor Mat Materials* — (Optional) — Floor mat material Nom. 1/8 in. thick loose laid over the subfloor. Floor topping thickness shall be a minimum of 3/4 in.
KEENE BUILDING PRODUCTS CO INC — Type Quiet Qurl 52/013 and Quiet Qurl 52/013 N
Alternate Floor Mat Materials* — (Optional) — Floor mat material Nom. 1/4 in. entangled net core with a compressible fabric attached to the bottom loose laid over the subfloor. Floor topping thickness shall be a minimum of 1 in.
KEENE BUILDING PRODUCTS CO INC — Quiet Qurl 55/025 MT and Quiet Qurl 55/025 N MT
System No. 14
Subflooring — Min 23/32 in. thick T&G wood structural panels, min grade "Underlayment" or "Single-Floor". Face grain of plywood or strength axis of panels to be perpendicular to the trusses with end joints staggered 4 ft. Panels secured to trusses with construction adhesive and No. 6d ringed shank nails spaced 12 in. OC along each truss. TetraGRIP™ nails measuring 2-3/8 in. long, 0.113 in. diameter, 0.272 in. round head, and helically threaded shank with barbed features on the helix meeting ASTM F1667 and having equal or greater withdrawal and lateral resistance strength may be substituted for the 6d nails. Staples having equal or greater withdrawal and lateral resistance strength may be substituted for the 6d nails.
Gypsum Board* — One layer of nom 5/8 in. thick, 4 ft wide gypsum board, installed with long dimension perpendicular to joists. Gypsum board secured with 1 in. long No. 6 Type W bugle head steel screws spaced 12 in. OC and located a min of 1-1/2 in. from side and end joints. The joints of the gypsum board are to be staggered a minimum of 12 inches from the joints of the subfloor.
GEORGIA-PACIFIC GYPSUM L L C — Type DS
Floor Mat Materials* — (As an alternate to the single layer gypsum board) — Floor mat material loose laid over the subfloor.
MAXXON CORP — Type Acousti-Mat 1/8, Acousti-Mat 1/4, Acousti-Mat 1/4 Premium, Acousti-Mat 3/8, Acousti-Mat 3/8 Premium, Acousti-Mat 3/4, Acousti-Mat 3/4 Premium, Acousti-Top.
Gypsum Board* — (For use when floor mat is used) Two layers of nom 5/8 in. thick, 4 ft wide gypsum board, installed with long dimension perpendicular to joists on top of the floor mat material. Gypsum board secured to each other with 1 in. long No. 6 Type G bugle head steel screws spaced 12 in. OC and located a min of 1-1/2 in. from side and end joints. The joints of the gypsum board are to be staggered a minimum of 12 inches in between layers and from the joints of the subfloor.
GEORGIA-PACIFIC GYPSUM L L C — Type DS
System No. 15
Subflooring — Min 23/32 in. thick wood structural panels, min grade "C-D" or "Sheathing". Face grain of plywood or strength axis of panels to be perpendicular to the trusses with joints staggered.
Vapor Barrier — (Optional) — Commercial asphalt saturated felt, 0.030 in. thick.
Finish Flooring - Floor Topping Mixture* — Min 3/4 in. thickness of floor topping having a min compressive strength of 1000 psi. Refer to manufacturer's instructions accompanying the material for specific mix design.
DEPENDABLE LLC — GSL M3.4, GSL K2.6, GSL-CSD and GSL RH
Floor Mat Materials* — (Optional) Nom. 1/4 in. thick loose laid over the subfloor. Floor topping thickness shall be a minimum of 3/4 in.
KEENE BUILDING PRODUCTS CO INC — Type Quiet Qurl 55/025 and Quiet Qurl 55/025 N
Alternate Floor Mat Materials* — (Optional) — Floor mat material Nom. 3/8 in. thick loose laid over the subfloor. Floor topping thickness shall be a minimum of 1 in.
KEENE BUILDING PRODUCTS CO INC — Type Quiet Qurl 60/040 and Quiet Qurl 60/040 N
Alternate Floor Mat Materials* — (Optional) — Floor mat material Nom. 3/4 in. thick loose laid over the subfloor. Floor topping thickness shall be a minimum of 1-1/2 in.
KEENE BUILDING PRODUCTS CO INC — Type Quiet Qurl 65/075, Quiet Qurl 65/075 N
Alternate Floor Mat Materials* — (Optional) — Floor mat material Nom. 1/8 in. thick loose laid over the subfloor. Floor topping thickness shall be a minimum of 3/4 in.
KEENE BUILDING PRODUCTS CO INC — Type Quiet Qurl 52/013 and Quiet Qurl 52/013 N
Alternate Floor Mat Materials* — (Optional) — Floor mat material Nom. 1/4 in. entangled net core with a compressible fabric attached to the bottom loose laid over the subfloor. Floor topping thickness shall be a minimum of 1 in.
KEENE BUILDING PRODUCTS CO INC — Quiet Qurl 55/025 MT and Quiet Qurl 55/025 N MT
System No. 16
Subflooring — Min 23/32 in. thick wood structural panels, min grade "C-D" or "Sheathing". Face grain of plywood or strength axis of panels to be perpendicular to the joists with joints staggered.
Vapor Barrier — (Optional) — Commercial asphalt saturated felt, 0.030 in. thick.
Vapor Barrier — (Optional) — Nom 0.010 in. thick commercial rosin-sized building paper.
Finish Flooring* — Min 3/4 in. thickness of any Floor Topping Mixture bearing the UL Classification Marking as to Fire Resistance. See **Floor- and Roof-Topping Mixtures** (CCOX) category for names of Classified Companies.
Floor Mat Materials* (Optional) Nom 3/32 in. thick loose laid over the subfloor. Floor topping thickness shall be a minimum of 3/4 in.
PLITEQ INC — Type GenieMat RST02
Floor Mat Materials* (Optional)Nom 3/16 in. thick loose laid over the subfloor. Floor topping thickness shall be a minimum of 3/4 in.
PLITEQ INC — Type GenieMat FF03NP
Floor Mat Materials* (Optional) Nom 1/4 in. thick loose laid over the subfloor. Floor topping thickness shall be a minimum of 3/4 in.
PLITEQ INC — Type GenieMat FF06
Floor Mat Materials* (Optional) Nom 3/8 in. thick loose laid over the subfloor. Floor topping thickness shall be a minimum of 1 in.
PLITEQ INC — Type GenieMat FF10
Floor Mat Materials* (Optional) Nom 3/4 in. thick loose laid over the subfloor. Floor topping thickness shall be minimum of 1-1/2 in.
PLITEQ INC — Type GenieMat FF17
Floor Mat Materials* (Optional) Nom 1 in. thick loose laid over the subfloor. Floor topping thickness shall be a minimum of 1-1/2 in.
PLITEQ INC — Type GenieMat FF25
System No. 17
Subflooring — Nom. 1-1/2 in. thick T & G laminated composite plywood sub-floor panels to be perpendicular to the trusses with end joints staggered 4 ft. End joints centered over top chord of trusses. Subfloor panels secured to trusses with construction adhesive and #8 by 3 in. wood screws spaced 12 in. OC in the field and 6 in. OC at the end joints.
RSP INDUSTRIES INC — SAP board
System No. 18
Subflooring — Min 15/32 in. thick wood structural panels, min grade "Underlayment" or "Single-Floor". Panels secured to trusses with construction adhesive and No. 6d ringed shank nails spaced 12 in. OC along each truss.
Wall and Partition Facings and Accessories* - Sound Barrier (Optional) — Acoustic Sleeper pads stapled to the top of the subfloor and centered over wood trusses. Acoustic Sleeper pads are to be spaced appropriately so that the finish floor panels are fastened through Acoustic Sleeper pads to the trusses.
STC ARCHITECTURAL PRODUCTS L L C DBA STC SOUND CONTROL — Acoustic Sleeper
Finish Floor — Min 23/32 in. thick T & G wood structural panels, min grade "Underlayment" or "Single-Floor". Face grain of plywood or strength axis of panels to be perpendicular to the trusses with end joints staggered 4 ft. Butt joints of panels have the option of being sealed with any UL Classified caulk or sealant found under - Fill, Void or Cavity Materials* (XHHW).
System No. 19
Structural Cement-Fiber Units* — For use with **UNITED STATES GYPSUM CO** Types C, IP-X2, IPC-AR and ULIX gypsum boards only. Nom 3/4 in. thick, with long edges tongue and grooved. Long dimension of panels to be perpendicular to wood trusses with end joints staggered a min of 2 ft and centered over the trusses. Panels secured to wood trusses with 1-5/8 in. long, No. 8, self- countersinking wood screw spaced a max of 12 in. OC in the field with a screw located 1 in. and 2 in. from each edge, and 8 in. OC on the perimeter with a screw located 2 in. from each edge, located 1/2 in. from the end edges of the panel.
UNITED STATES GYPSUM CO — Types STRUCTO-CRETE, USGSP
System No. 20
Subflooring — Min 23/32 in. thick T & G wood structural panels, min grade "Underlayment" or "Single-Floor". Face grain of plywood or strength axis of panels to be perpendicular to the trusses with end joints staggered 4 ft. Panels secured to trusses with construction adhesive and No. 6d ringed shank nails spaced 12 in. OC along each truss. TetraGRIP™ nails measuring 2-3/8 in. long, 0.113 in. diameter, 0.272 in. round head, and helically threaded shank with barbed features on the helix meeting ASTM F1667 and having equal or greater withdrawal and lateral resistance strength may be substituted for the 6d nails. Staples having equal or greater withdrawal and lateral resistance strength may be substituted for the 6d nails.
Finish Flooring - Floor Topping Mixture* — Min 1 in. thickness of floor topping mixture having a min compressive strength of 4500 psi. Refer to manufacturer's instructions accompanying the material for specific mix design.
SIKA DEUTSCHLAND GMBH — Type SCHONOX AP Rapid Plus
2. **Trusses —** Parallel chord trusses, spaced a max 24 in. OC, fabricated from nom 2 by 4 in. lumber with lumber oriented vertically or horizontally. Min truss depth is 12 in. when item 9 is not employed. Min truss depth is 18 in. when item 9 is employed. Truss members secured together with min No. 20 MSG galv steel truss plates. Plates have 5/16 in. long teeth projecting perpendicular to the plane of the plate. The teeth are in pairs facing each other (made by the same punch), forming a split-tooth-type plate. Each tooth has a chisel point on its outside edge. These points are diagonally opposite each other for each pair. The top half of each tooth has a twist for stiffness. The pairs are repeated on approx 7/8 in. centers with four rows of teeth per in. of plate width.
3. **Furring Channels —** Furring channels, 7/8 in. deep by 2-9/16 in. or 2-11/16 in. or 2-23/32 in. wide at the base and 1-7/16 in. wide at the face, formed from No. 25 ga galv steel, spaced 24 in. OC perpendicular to trusses. Channels secured to trusses with double strand of No. 18 SWG galv steel wire spaced 48 in. OC. Ends of adjoining channels overlapped 6 in. and tied together with double strand of No. 18 SWG galv steel wire near each end of overlap. Two furring channels used at end joints of gypsum board (Item 4), each extending a min of 6 in. beyond both side edges of the board.
3A. **Resilient Channels —** (Not Shown) — As an alternate to Item 3, resilient channel formed from No. 26 MSG galv steel, spaced 16 in. OC perpendicular to trusses. Channels secured to each truss with 1-1/4 in. long No. 6 Type S bugle head steel screw. Channels overlapped at splices 4 in. Two resilient channels used at end joints of gypsum board (Item 4), each extending a min of 6 in. beyond both side edges of the board. When foamed plastic insulation (Item 7E) is applied to the underside of the subflooring, resilient channels shall be spaced maximum 12 in. OC.
3B. **Steel Framing Members* —** (Optional) — Used as an alternate method to attach furring channels to trusses (Item 2). Clips spaced 48 in. OC. RSIC-1 and RSIC-1 (2.75) clips secured to the bottom chord of alternating trusses with No. 8 x 2-1/2 in. coarse drywall screw through the center grommet. RSIC-V and RSIC-V (2.75) clips secured to the bottom chord of alternating trusses with No. 8 x 1-1/2 in. coarse drywall screw through the center hole. Furring channels are friction fitted into clips. RSIC-1 and RSIC-V clips for use with 2-9/16 in. wide furring channels. RSIC-1 (2.75) and RSIC-V (2.75) clips for use with 2-23/32 in. wide furring channels. Adjoining channels are overlapped as described in Item 3. As an alternate, ends of adjoining channels may be overlapped 6 in. and secured together with two min 7/16 in. long No. 6 self-tapping framing screws, at the midpoint of the overlap, with one screw on each flange of the channel. Additional clips required to hold furring channel that supports the gypsum board butt joints, as described in Item 4. When Fiber, Sprayed (Item 6) is used, furring channel spacing reduced to 16 in. OC and two layers of nom 5/8 in. thick, 4 ft wide gypsum board shall be installed as described in Item 4.
PAC INTERNATIONAL L L C — Types RSIC-1, RSIC-V, RSIC-1 (2.75), RSIC-V (2.75).
3C. **Steel Framing Members* —** (Optional, Not Shown) — Used as an alternate method to attach furring channels to trusses. Clips spaced 48 in. OC., and secured to the bottom chord to alternating trusses with two No. 8 x 2-1/2 in. coarse drywall screws, one through the hole at each end of the clip. Furring channels are friction fitted into clips. Ends of adjoining channels overlapped 6 in. and tied together with double strand of No. 18 SWG galv steel wire near each end of overlap. Additional clips required to hold furring channel that supports the gypsum board butt joints, as described in Item 4. Two layers of gypsum board required as described in Item 4. Not evaluated for use with Item 6. When Item 3C is used and Batts and Blankets* are added per Section III Item 18 Blanket Insulation in the General Information of this Directory (BXUV), clips spaced 48 in. OC, furring channels spaced 16 in. OC max, 3-1/2 in. max. Batts and Blankets* secured to plywood subfloor with staples spaced 12 in. OC or to the trusses with 0.090 in. diam galv steel wires spaced 12 in. OC, and two layers of gypsum board required as described in Item 4A. When the Batts and Blankets* are draped over the furring channel/gypsum panel ceiling membrane, the clip spacing shall be reduced to 24 in. OC and secured to consecutive trusses, the furring channel spacing shall be reduced to 12 in. OC, and two layers of gypsum board required as described in Item 4A.
KINETICS NOISE CONTROL INC — Type Isomax.
3D. **Steel Framing Members* —** (Optional, Not Shown) — Used as an alternate method to attach furring channels to trusses. Clips spaced 48 in. OC and secured to the bottom chord to alternating trusses with one No. 8 x 2-1/2 in. coarse drywall screw through the center hole. Furring channels are friction fitted into clips. Ends of channels are overlapped 6 in. and tied together with double strand of No. 18 SWG galv steel wire. Additional clips required to hold furring channel that supports the gypsum board butt joints, as described in Item 4. Not evaluated for use with Item 6.
PLITEQ INC — Type Genie Clip
3E. **Steel Framing Members* —** (Optional, Not Shown) — For use with Item 7B - Used as an alternate method to attach furring channels to trusses. Clips spaced at 48" OC and secured to the bottom of the trusses with one 2 in. Coarse Drywall Screw with 1 in. diam. washer through the center hole. Furring channels are then friction fitted into clips. Ends of channels are overlapped 6 in. and tied together with double strand of No. 18 SWG galv steel wire .Additional clips are required to hold the Gypsum Butt joints as described in item 4. Not evaluated for use with Item 6.
STUDCO BUILDING SYSTEMS — RESILMOUNT Sound Isolation Clips - Type A237 or A237R
3F. **Resilient Channels —** For use with Item 4B and 7A - Resilient channels, formed from No. 25 MSG galv steel and shaped as shown, spaced 12 in. OC perpendicular to joist. Channels overlapped 4 in. at splices and secured to each joist with 1-1/4 in. Type S screws. Min end clearance of channels to wall to be 1/2 in. Additional resilient channels positioned so as to coincide with end joints of gypsum board.
3G. **Resilient Channels —** For Use With Item 4C and 7C. Formed from min 25 MSG galv steel installed perpendicular to trusses and spaced 16 in. OC. Channels secured to each truss with 1-5/8 in. long Type S bugle head steel screws. Channels overlapped 4 in. at splices. Two channels, spaced 6 in. OC, oriented opposite each gypsum panel end joint. Additional channels shall extend min 6 in. beyond each side edge of panel. Insulation, Item 7C is applied over the resilient channel/gypsum panel ceiling membrane.
3H. **Steel Framing Members* —** (Optional, Not Shown) — Used as an alternate method to attach furring channels to trusses. Clips spaced at 48" OC and secured to the bottom of the trusses with one 2-1/2 in. Coarse Drywall Screw with 1 in. diam. washer through the center hole. Furring channels are then friction fitted into clips. Ends of channels are overlapped 6 in. and tied together with double strand of No. 18 SWG galv steel wire .Additional clips are required to hold the Gypsum Butt joints as described in item 4. Not evaluated for use with Item 6.
REGUPOL AMERICA — Type SonusClip
3I. **Steel Framing Members —** (Not Shown) — As an alternate to Item 3, main runners, cross tees, cross channels and wall angle as listed below.
a. **Main Runners —** Nom 10 or 12 ft long, 15/16 in. or 1-1/2 in. wide face, spaced 4 ft. OC. Main runners suspended by min 12 SWG galv. steel hanger wires spaced 48 in. OC. Hanger wires to be located adjacent to main runner/cross tee intersections. Hanger wires wrapped and twist-tied on 16d nails driven in to side of trusses at least 5 in. above the bottom face.
b. **Cross Tees or Channels —** Nom 4 ft long cross tees, with 15/16 in. or 1-1/2 in. wide face, or nom 4 ft long cross channels, with 1-1/2 in. wide face, spaced 16 in. OC, installed perpendicular to the main runners. Additional cross tees or channels used 8 in. from each side of butted gypsum board end joints. The cross tees or channels may be riveted or screw-attached to the wall angle or channel to facilitate the ceiling installation.
c. **Wall Angle or Channel —** Painted or galv. steel angle w/ 1 in. legs or channel with 1 in. legs, 1-9/16 in. deep attached to walls at perimeter of ceiling with fasteners 16 in. OC. To support steel framing member ends & for screw-attachment of the gypsum panel.
USG INTERIORS LLC — Type DGL or RX
3J. **Steel Framing Members* —** (Optional, Not Shown) — Used to attach resilient channels (Item 3A) to trusses (Item 2). Clips spaced 48 in. OC on adjacent trusses, and secured to trusses with one No. 8 x 2-1/2 in. coarse drywall screw through center grommet hole. Channels secured to clips with one #10 x 1/2 in. pan-head self-drilling screw. Ends of adjoining channels overlapped 6 in. and secured together with two #8 15 x 1/2 in. Philips Modified Truss screws spaced 2-1/2 in. from the center of the overlap. Gypsum board butt joints require additional resilient channels spaced 1-1/2 in. from the butt joint on either side. One edge of the extra channels will extend to an adjacent truss where it is secured with a clip.
KEENE BUILDING PRODUCTS CO INC — Type RC+ Assurance Clip
3K. **Resilient Channels —** For use with items 3L, 4F, and 7G — Formed from min 26 MSG galv steel installed perpendicular to trusses. When Item 7G is draped over channels, channels spaced a maximum 12 in. OC. Channels secured to each truss as described in Item 3L. Channel ends butted and centered under the joists and attached to the joists with one screw at each end. Additional resilient channels positioned so as to coincide with end joints of gypsum board as shown in the above illustration. Additional channels shall extend min 3 in. beyond each side edge of board.
3L. **Steel Framing Members* —** (Optional, Not Shown) — Used as an alternate method to attach resilient channels to joists (Item 2). For use with items 3K, 4F and 7G. A resilient sound isolation accessory shall be used at each attachment point of the resilient channels and spaced max 24 in. O.C. Channel ends butted and centered under the joists and attached to the joists with one accessory at each end. Additional accessories used to hold resilient channels that support the gypsum board end joints, as described in Item 3K. The accessory envelops the mounting edge of the resilient channel. The accessory and resilient channel are fastened to the joists with the screws supplied with the accessory and per the accessory manufacturer's installation instructions.
ACOUSTIC PROPERTIES L L C — Types RC-1 Boost
3M. **Steel Framing Members* —** (Optional, Not Shown) — As an alternate to Item 3.
a. **Furring Channels —** Formed of No. 25 MSG galv steel, nominal 2-1/2 in. wide by 7/8 in. deep, spaced 24 in. OC, perpendicular to trusses. Channels secured to Cold Rolled Channels at every intersection with a 3/4 in. TEK screw through each furring channel leg. Ends of adjoining channels overlapped 12 in. and fastened together with two double strand No. 18 SWG galv steel wire ties, one at each end of overlap, or with two 3/4 in. TEK screws in each leg of the overlap section. Two furring channels used at end joints of gypsum board (Item 4), each extending a min of 6 in. beyond both side edges of the board.
b. **Cold Rolled Channels —** 1-1/2 in. by 1/2 in., formed from No. 16 ga. galv steel, positioned vertically and parallel to trusses, friction-fitted into the channel caddy on the Steel Framing Members (Item 3Md) and secured with two 3/4 in. TEK screws. Adjoining lengths of cold rolled channels lapped min. 12 in. and secured along bottom legs with four 3/4 in. TEK screws and wire-tied together with two double strand 18 SWG galv steel wire ties, one at each end of overlap.
c. **Blocking —** Where truss design does not permit direct, full contact of the hanger bracket, a piece of nominal 2 by 4 in. lumber (blocking), min. 12 in. long to permit full contact of the hanger bracket, to be secured vertically to the side of the trusses at the top and bottom of the blocking at each Steel Framing Member (Item 3Md) location with 16d nails or minimum 2-1/2 in. screws.
d. **Steel Framing Members* —** Spaced 48 in. OC. max along truss, and secured to the truss on alternating trusses with two, #10 x 1-1/2 in. screws through mounting holes on the hanger bracket.
PAC INTERNATIONAL L L C — Type RSIC-SI-CRC EZ Clip
3N. **Steel Framing Members* —** (Optional, Not Shown) — As an alternate to Item 3.
a. **Furring Channels —** Formed of No. 25 MSG galv steel, nominal 2-1/2 in. wide by 7/8 in. deep, spaced 24 in. OC perpendicular to trusses and friction fit into Steel Framing Members (Item 3Nc). Ends of adjoining channels overlapped 6 in. and tied together with double strand of No. 18 SWG galv steel wire near each end of overlap or with two TEK screws along each leg of the 6 in. overlap. Two furring channels used at end joints of gypsum board (Item 4). Butt joint channels held in place by strong back channels placed upside down, on top of, and running perpendicular to primary furring channels, extending 6 in. longer than length of gypsum side joint. Strong back channels spaced maximum 48 in. OC. Strong back channels secured to every intersection of primary furring channels with four 7/16 in. pan head screws, two along each of the legs at intersections. Butt joint channels run perpendicular to strong back channels and shall be minimum 6 in. longer than length of joint, secured to strong back channels with 7/16 in. pan head screws, two along each of the legs at intersection with strong back channels.
b. **Blocking —** Where truss design does not permit direct, full contact of the hanger bracket, a piece of nominal 2 by 4 in. lumber (blocking), min. 12 in. long to permit full contact of the hanger bracket, to be secured vertically to the side of the trusses at the top and bottom of the blocking at each Steel Framing Member (Item 3Nc) location with 16d nails or minimum 2-1/2 in. screws.
c. **Steel Framing Members* —** Used to attach furring channels (Item 3Na) to trusses. Clips spaced 48 in. OC and secured along truss webs at each furring channel intersection with min. 3/4 in. long self-drilling #10 x 1-1/2 in. screws through each of the provided hole locations. Furring channels are friction fitted into clips.
PAC INTERNATIONAL L L C — Type RSIC-S1-1 Ultra
4. **Gypsum Board* —** One layer of nom 5/8 in. thick, 4 ft wide gypsum board, installed with long dimension perpendicular to furring or resilient channels. Gypsum board secured with 1 in. long No. 6 Type S bugle head steel screws spaced 12 in. OC and located a min of 1-1/2 in. from side and end joints. End joints secured to both resilient channels as shown in the end joint detail. When **Steel Framing Members** (Item 3B) are used, one layer of nom 5/8 in. thick, 4 ft wide gypsum board is installed with long dimension perpendicular to furring channels. Gypsum board secured to furring channels with nom 1 in. long No. 6 Type S bugle head screws spaced 12 in. OC in the field of the board. Gypsum board butt joints shall be staggered 2 ft within the assembly, and shall occur between the main furring channels. At the gypsum board butt joints, each end of each gypsum board shall be supported by a single length of furring channel equal to the width of the gypsum board plus 6 in. on each end. The two furring channels at each butt joint shall be spaced approximately 3-1/2 in. OC, and be attached to the bottom chord of the truss with one RSIC-1 clip at each end of the channel. Screw spacing along the gypsum board butt joint shall be 8 in. OC. When both **Steel Framing Members** (Item 3B) and **Fiber, Sprayed** (Items 6 or 6A) are used, furring channel spacing reduced to 16 in. OC and two layers of nom 5/8 in. thick, 4 ft wide gypsum board are installed with long dimension perpendicular to furring channels. Base layer secured to furring channels with nom 1 in. long No. 6 Type S bugle head screws spaced 12 in. OC in the field of the board. Gypsum board butt joints shall be staggered 2 ft within the assembly, and shall occur between the main furring channels. At the gypsum board butt joints, each end of each gypsum board shall be supported by a single length of furring channel equal to the width of the gypsum board plus 6 in. on each end. The two furring channels at each butt joint shall be spaced approximately 3-1/2 in. OC, and be attached to the bottom chord of the truss with one RSIC-1 clip at each end of the channel. Screw spacing along the gypsum board butt joint shall be 8 in. OC. Outer layer secured to furring channels using 1-5/8 in. long No. 6 Type S screws spaced 8 in. OC and 1-1/2 in. from the end joint. Butted end joints to be offset a min. of 8 in. from base layer end joints. Butted side joints of outer layer to be offset min. 18 in. from butted side joints of base layer. When **Steel Framing Members** (Item 3C) are used, two layers of nom 5/8 in. thick, 4 ft wide are installed with long dimensions perpendicular to furring channels. Base layer attached to the furring channels using 1 in. long No. 6 Type S bugle-head steel screws spaced 12 in. OC in the field of the board. Butted end joints shall be staggered min 2 ft. within the assembly, and occur midway between the continuous furring channels. Each end of each gypsum board shall be supported by a single length of furring channel equal to the width of the gypsum board plus 6 in. on each end. The two furring channels shall be spaced approximately 4 in. OC, and be attached to underside of the truss with one Isomax clip at each end of the channel. Screw spacing along the gypsum board butt joint shall be 8 in. OC. Outer layer attached to the furring channels using 1-5/8 in. long No. 6 Type S bugle-head steel screws spaced 12 in. OC in the field. The end of the outer layer boards at the butt joint shall be attached to the base layer boards with 1-5/8 in. long Type G screws spaced 8 in. OC and 1-1/2 in. from the end joint. Butted end joints to be offset a min of 8 in. from base layer end joints. Butted side joints of outer layer to be offset min 18 in. from butted side joints of base layer. When **Steel Framing Members** (Item 3D) are used, one layer of nom 5/8 in. thick, 4 ft wide gypsum board is installed with long dimension perpendicular to furring channels. Gypsum board secured to furring channels with nom 1 in. long No. 6 Type S bugle-head steel screws spaced 12 in. OC in the field of the board. Gypsum board butted end joints shall be staggered minimum 16 in. within the assembly. . At the gypsum board butt joints, each end of each gypsum board shall be supported by a single length of furring channel equal to the width of the gypsum board plus 6 in. on each end. These additional furring channels shall be attached to underside of the truss with Genie clips as described in Item 3D. Screw spacing along the gypsum board butt joint shall be 6 in. OC. When **Steel Framing Members** (Item 3E) are used, one layer of nom 5/8 in. thick, 4 ft wide gypsum board is installed with long dimensions perpendicular to furring channels. Gypsum board secured to furring channels with nom 1 in. long Type S bugle-head steel screws spaced 8 in. OC in the field of the board. Gypsum board butted end joints shall be staggered minimum 48 in. and centered over main furring channels. At the gypsum board butt joints, each end of each gypsum board shall be supported by a single length of furring channel equal to the width of the gypsum board plus 3 in. on each end. The two support furring channels shall be spaced approximately 3 in. in from joint. Screw spacing along the gypsum board butt joint and along both additional channels shall be 8 in. OC. Additional screws shall be placed in the adjacent section of gypsum board into the aforementioned 3 in. extension of the extra butt joint channels as well as into the main channel that runs between . Butt joint furring channels shall be attached with one RESILMOUNT Sound Isolation Clip at each end of the channel. When **Fiber, Sprayed** (Items 6 or 6A) is used, two layers of nom 5/8 in. thick, 4 ft wide gypsum board are installed with long dimensions perpendicular to furring channels. Base layer gypsum board secured with 1 in. long No. 6 Type S bugle head steel screws spaced 12 in. OC and located a min of 1-1/2 in. from side and end joints. End joints secured to both resilient channels as shown in the end joint detail. Outer layer gypsum board secured with 1-5/8 in. long No. 6 Type S bugle head steel screws spaced 12 in. OC and located a min of 1-1/2 in. from side and end joints. Outer layer shall be finished as described in Item 5. When **Foamed Plastic** insulation (Item 7E) is applied to the underside of the subflooring, screw spacing shall be reduced to 8 in. OC with minimum 1-1/4 in. long Type S screws to install gypsum to the resilient channels (Item 3A). Resilient channels (Item 3A) to be spaced maximum 12 in. OC. Butted end joints shall be staggered min. 2 ft within the assembly, and occur midway between the continuous furring channels. End joints secured to both resilient channels as shown in end joint detail. When **Steel Framing Members** (Item 3E) are used, one layer of nom 5/8 in. thick, 4 ft wide gypsum board is installed with long dimensions perpendicular to furring channels. Gypsum board secured to furring channels with nom 1 in. long Type S bugle-head steel screws spaced 8 in. OC in the field of the board. Gypsum board butted end joints shall be staggered minimum 48 in. and centered over main furring channels. At the gypsum board butt joints, an additional single length of furring channel shall be installed and be spaced approximately 3 in. from the butt joint (6 in. from the continuous furring channels) to support the floating end of the gypsum board. Each of these shorter sections of furring channel shall extend one truss beyond the width of the gypsum panel and be attached to the adjacent trusses with one SonusClip at every truss involved with the butt joint. When **Steel Framing Members*** (Item 3I) are used, one layer of 5/8 in. thick, 48 in. wide gypsum board, installed with long dimension perpendicular to cross channels with side joints centered along main runners. Gypsum board fastened to cross channels with 1 in. long No. 8 Type S bugle head steel screws located 1/2 in. from end joints and 1-3/4 in. from side joints and spaced 8 in. OC along the end joints and in the field. Panels fastened to cross tees with 1 in. long, Type S bugle-head screws spaced in the field and 8 in. OC along end joints. Panels fastened to main runners with 1 in. long, Type S bugle-head screws spaced midway between cross tees. Screws along sides and ends of panels spaced 3/8 to 1/2 in. from panel edge. Gypsum board sheets screw attached to leg of wall angle with 1 in. long No. 8 Type S bugle head steel screws spaced 12 in. OC. End joints of panels shall be staggered with spacing between joints on adjacent panels not less than 4 ft OC.
When **Steel Framing Members** (Item 3J) are used, one layer of nom 5/8 in. thick, 4 ft wide gypsum board is installed with long dimensions perpendicular to resilient channels. Gypsum board secured to resilient channels with nom 1 in. long Type S bugle-head steel screws spaced 8 in. OC in the field of the board and located 3/4 in. from side joints and 1-1/2 in. from end joints. Gypsum board joints are to be staggered by a minimum of 24 in. When **Steel Framing Members** (Item 3M) are used, nom 5/8 in. thick, 4 ft wide gypsum board, installed as described in Item 4. Adjacent butt joints staggered minimum 48 in. OC. When **Steel Framing Members** (Item 3N) are used, nom 5/8 in. thick, 4 ft wide gypsum board, installed as described in Item 4. Butt joints staggered minimum 24 in. OC.**AMERICAN GYPSUM CO** — Type AG-C **CERTAINTEED GYPSUM INC** — Types FRPC, Type C **CGC INC** — Types C, IP-X2, IPC-AR **CONTINENTAL BUILDING PRODUCTS OPERATING CO, L L C** — Type LGFC-C/A **GEORGIA-PACIFIC GYPSUM L L C** — Types 5, DAPC, TG-C **NATIONAL GYPSUM CO** — Types eXP-C, FSK-C, FSW-C, FSW-G **PABCO BUILDING PRODUCTS L L C, DBA PABCO GYPSUM** — Type C **THAI GYPSUM PRODUCTS PCL** — Type C **UNITED STATES GYPSUM CO** — Types C, IP-X2, IPC-AR **USG BORAL DRYWALL SFZ LLC** — Type C **USG MEXICO S A DE C V** — Types C, IP-X2, IPC-AR
4A. **Gypsum Board —** For use when Item 3C is used and **Batts and Blankets*** are secured to the plywood subfloor, to the trusses or draped over the furring channel/gyp panel ceiling membrane as described in Item 3C. For method of gyp board installation, see Item 4. **CGC INC** — Types C, IP-X2, IPC-AR **UNITED STATES GYPSUM CO** — Types C, IP-X2, IPC-AR **USG BORAL DRYWALL SFZ LLC** — Type C **USG MEXICO S A DE C V** — Types C, IP-X2, IPC-AR
4B. **Gypsum Board* —** For use when **Batts and Blankets*** (Item 7A) and Resilient Channels (Item 3F) are used. Nom 5/8 in. thick, 4 ft wide gypsum board installed with long dimension perpendicular to resilient channels. Nom 1 in. long No. Type S bugle head screws are driven through channel spaced 8 in. OC. End joints of gypsum board similarly fastened to additional resilient channels positioned at end joint locations.
AMERICAN GYPSUM CO — Type AG-C. **CONTINENTAL BUILDING PRODUCTS OPERATING CO, L L C** — Type LGFC-C/A **PABCO BUILDING PRODUCTS L L C, DBA PABCO GYPSUM** — Type C
4C. **Gypsum Board* —** For use with Items 3G and 7C or 3I and 7F, and 7C. Nom 5/8 in. thick, 48 in. wide gypsum panels installed with long dimension perpendicular to resilient channels. Gypsum panels secured with 1 in. long Type S bugle head steel screws spaced 8 in. OC and located a min of 1/2 in. from side joints and 3 in. from the end joints. Finish Rating with this ceiling system is 20 min. **UNITED STATES GYPSUM CO** — Type ULIX
4D. **Gypsum Board* —** For use when Flooring System (Item 1) consists of both System No. 1 and min 15/32 in. plywood, min grade "Underlayment" or "Sturd-I-Floor" with T & G edges and conforming with PS1-83 specifications, or min 3/4 in. thickness of any Floor Topping Mixture (CCOX) bearing the UL Classification Marking as to Fire Resistance, min Truss depth (Item 2) is 18 in. and Batts and Blankets (Item 7D) and Resilient Channels (Item 3A) are used. One layer of nom 5/8 in. thick, 48 in. wide gypsum board installed with long dimension perpendicular to resilient channels. Gypsum board secured with 1 in. long Type S bugle head steel screws. Screws spaced 1 in. from side joints, and 12 in. OC in the rest of the field. Screws spaced 1-1/2 in. from the end joints. End joints secured to both resilient channels as shown in end joint detail. When batt insulation (Item 7D) is draped over the resilient channel/gypsum board ceiling membrane, the resilient channel (Item 3A) spacing shall be reduced to 12 in. OC., and gypsum board screws spaced 1 in. from side joints, and 8 in. OC in the rest of the field. For use only with Ceiling Damper described in Item 9R.
PANEL REY S A — Type PRC2
4F. **Gypsum Board* —** For use with Items 3K, 3L, and 7G— One layer of nom 5/8 in. thick, 4 ft wide gypsum board is installed with long dimensions perpendicular to resilient channels. Gypsum board secured to resilient channels with min nom 1 in. long Type S bugle-head steel screws spaced 8 in. OC in the field of the board and located 3/4 in. from side joints and 1-1/2 in. from end joints. Gypsum board butt joints are to be staggered by a minimum of 24 in.
PABCO BUILDING PRODUCTS L L C, DBA PABCO GYPSUM — Type C
5. **Finishing System —** (Not Shown) — Vinyl, dry or premixed joint compound, applied in two coats to joints and screw-heads. Nom 2 in. wide paper tape embedded in first layer of compound over all joints. As an alternate, nom 3/32 in. thick veneer plaster may be applied to the entire surface of gypsum board.
6. **Fiber, Sprayed* —** (Dry Dense Packed 100% Borate Formulation) — (Not Shown, Optional) — The fiber is applied without water or adhesive at a nominal dry density of 3.5 lb/ft³, in accordance with the application instructions supplied with the product. When Item 6 (Fiber, Sprayed, Dry Dense Packed) is used, Furring Channels (Item 3F) or Resilient Channels (Item 3A) spacing shall be reduced to 12 in. OC. When Item 6 (Fiber, Sprayed, Dry Dense Packed) is used, two layers of gypsum board required as described in Item 4. Not evaluated for use with Item 3C.
U S GREENFIBER L L C — INS735, INS745, INS765LD & INS770LD to be used with dry application only.
6A. **Fiber, Sprayed* —** (Loose Fill 100% Borate Formulation) — (Not Shown, Optional) — The finished rating when Fiber, Sprayed is used has not been determined. The fiber is applied without water or adhesive at a minimum dry density of 0.5 lb/ft³ and at a max thickness of 3-1/2 in., in accordance with the application instructions supplied with the product. When Item 6A (Fiber, Sprayed, Loose Fill) is used, Furring Channels (Item 3F) or Resilient Channels (Item 3A) spacing shall be reduced to 12 in. OC. When Item 6A (Fiber Sprayed, Loose Fill) is used, two layers of gypsum board required as described in Item 4. Not evaluated for use with Item 3C.
U S GREENFIBER L L C — INS735, INS745, INS765LD & INS770LD to be used with dry application only.
7. **Batts and Blankets* —** (Not Shown) — For use with Item 3D — Nom 3 in. thick mineral wool insulation held suspended in the concealed space with 0.090 in. diam galv steel wires attached to the wood trusses at 18 in. OC.
7A. **Batts and Blankets* —** For Use With Items 3F and 4B — Glass fiber insulation bearing the UL Classification Marking as to Surface Burning Characteristics and/or Fire Resistance having a min. density of 0.5 pcf, draped over the resilient channel/gypsum panel ceiling membrane. No limit on overall thickness.
7B. **Batts and Blankets* —** (Not Shown) — For use with Item 3E — Nom 3-1/2 in. thick, min. 2 pcf fiber glass insulation held suspended in the concealed space with nominal 0.090 in. diam galv steel wires attached to the wood trusses at nominally 16 in. OC.
7C. **Batts and Blankets* or Fiber, Sprayed* —** For Use with Item 4C (Not Shown) — Min. 3-1/2 in thick with no limit on maximum thickness fitted in the concealed space, draped over the resilient channel (Item 3G)/gypsum board (Item 4C) ceiling membrane.
7D. **Batts and Blankets* —** For Use With Item 4D — Insulation may be secured to plywood subfloor with staples spaced 12 in. OC or to the trusses with 0.090 in. diam galv steel wires spaced 12 in. OC. Insulation may alternatively be draped over the resilient channels and gypsum board ceiling membrane, and the resilient channels and gypsum board attachment shall be modified as specified in Item 4D. Any glass fiber insulation bearing the UL Classification Marking for Surface Burning Characteristics and/or Fire Resistance, and having a min density of 0.5 pcf and max thickness of 3-1/2 in. may be used.
7E. **Foamed Plastic* —** (As alternate to Item 6 and 6A, Not Shown) — Spray foam insulation applied directly to the underside of the plywood subflooring. Spray foam insulation installed to a maximum thickness of 10 in. at a nominal 0.5 lb/ft³ or 2.0 lb/ft³ density, depending on the product installed. Spray foam insulation is limited to use with minimum 18 in. deep trusses (Item 2). When spray foam insulation is installed, resilient channels (Item 3A) shall be installed maximum 12 in. OC, with channels adjacent to butt joints of gypsum board (Item 4) spaced maximum 3 in. away from gypsum butt joints. Gypsum board (Item 4) to be installed using minimum 1-1/4 in. long Type S screws, spaced maximum 8 in. OC, and butted end joints shall be staggered min. 2 ft within the assembly, and occur midway between the continuous furring channels. If used with a fire damper (Item 9) in the concealed space, minimum 1 in. clearance to be maintained between damper housing and spray foam insulation. Not evaluated for use with Items 3, 3B through 3F, 3G, 6, 6A, 7 through 7D. Not evaluated with Flooring System (Item 1) Configuration No. 1. **BASF CORP** — Enertite® NM, Enertite® G, FE178®, Spraytite® 178, Spraytite® 81206, Walltite® 200, Walltite® US, Walltite® US-N, and Walltite® HP+
7F. **Batts and Blankets* —** (Not Shown) For Use with Item 3I and 4C — Glass fiber or mineral wool insulation bearing the UL Classification Marking as to Surface Burning Characteristics and/or Fire Resistance. There is no limit in the overall thickness of insulation, and the insulation can be secured against the subflooring, held suspended in the concealed space or draped over the Steel Framing Members and gypsum panel membrane.
8. **Air Duct* —** (Optional) — Any UL Class 0 or Class 1 flexible air duct installed in accordance with the instructions provided by the damper manufacturer.
9. **Ceiling Damper* —** (Optional. To be used with Air Duct Item 8.) — For use with min. 18 in. deep trusses. Not for use with flooring system 1 or 17. Max. nom area shall be 349 sq in. Max. overall length and width shall not exceed 18-11/16 in. by 18-11/16 in. with max. 16 in. by 16 in. register opening. Aggregate damper openings shall not exceed 175 sq in. per 100 sq ft of ceiling area. Damper installed in accordance with the manufacturers installation instructions provided with the damper. An aluminum or steel grille (Item 10) shall be installed in accordance with installation instructions.
MIAMI TECH INC — Model Series RxCRD, RxCRDS or RxCRPD
9A. **Ceiling Damper* —** (Optional. To be used with Air Duct Item 8.) — For use with min. 18 in. deep trusses. Not for use with flooring system 1 or 17. Max damper assembly size nom 18 in. long by 18 in. wide and 4-1/4 in. high, or 8 in. diam. fabricated from galv steel. Aggregate damper openings shall not exceed 162 sq in. per 100 sq ft of ceiling area. Damper installed in accordance with the manufacturers installation instructions provided with the damper.
RUSKIN COMPANY — Model CFD7T or CFDR7T
9B. **Ceiling Damper* —** (Optional. To be used with Air Duct Item 8.) — For use with min. 18 in. deep trusses. Not for use with flooring system 1 or 17. Max damper assembly size nom 18 in. long by 18 in. wide and 4-1/4 in. high, or 8 in. diam. fabricated from galv steel. Aggregate damper openings shall not exceed 162 sq in. per 100 sq ft of ceiling area. Damper installed in accordance with the manufacturers installation instructions provided with the damper.
LAU INDUSTRIES INC — Model CCD7T or CCDR7T
9C. **Ceiling Damper* —** (Optional. To be used with Air Duct Item 8.) — For use with min. 18 in. deep trusses. Not for use with flooring system 1 or 17. Max 12 in. diameter damper with insulated register box assembly. The maximum size of the register box assembly is nom. 20 in. long by 20 in. wide and 4 in. high fabricated from galv steel. Aggregate area of the register opening(s) through the ceiling membrane shall not exceed 128 sq in. per 100 sq ft of ceiling area. Damper assembly installed in accordance with the manufacturers installation instructions.
AIRE TECHNOLOGIES INC — Series 57
9D. **Ceiling Damper* —** (Optional. To be used with Air Duct Item 8.) — For use with min. 18 in. deep trusses. Not for use with flooring system 1 or 17. Max 20 in. long by 16 in. wide by 4 in. high rectangular damper with duct board plenum box assembly. The maximum outer dimensions of the plenum box assembly are 23-1/2 in. long by 19-1/2 in. wide and 17 in. high fabricated from 6pcf, 1-1/2 to 2 in. thick Knauf Air Duct Board M*. Aggregate area of the register opening(s) through the ceiling membrane shall not exceed 160 sq in. per 100 sq ft ceiling area. Damper assembly installed in accordance with the manufacturers installation instructions.
AIRE TECHNOLOGIES INC — Series 58
9E. **Ceiling Damper* —** (Optional. To be used with Air Duct Item 8.) — For use with min. 18 in. deep trusses. Not for use with flooring system 1 or 17. Max 14 in. long by 14 in.wide by rectangular damper with 90° boot. The maximum size of damper/boot assembly is 14 in. long by 14 in. wide and 18 in. high fabricated from galv steel. The aggregate area of the register opening(s) through the ceiling membrane shall not exceed 98 sq in. per 100 sq ft ceiling area. Damper assembly installed in accordance with the manufacturers installation instructions.
AIRE TECHNOLOGIES INC — Models 50 w/ Boot, 50EA w/ Boot, 51 w/Boot, 50 w/ Box, 50EA w/ Box or 51 w/Box
9F. **Ceiling Damper* —** (Optional. To be used with Air Duct Item 8). — For use with min 18 in. deep trusses Not for use with flooring system 1 or 17. Max plenum box size nom 19 in. long by 19 in. wide and 11-7/8 in. high fabricated from galv steel. Aggregate damper openings shall not exceed 128 sq in. per 100 sq ft of ceiling area. Damper installed in accordance with the manufacturers installation instructions provided with the damper.
LLOYD INDUSTRIES INC — Model CRD 50-BT, CRD 50-EA-BT, CRD 55-BT, CRD 55 EA-BT
9G. **Ceiling Damper* —** (Optional. To be used with Air Duct Item 8). For use with min 18 in. deep trusses Not for use with flooring system 1 or 17. Max plenum box size nom 13 in. long by 13 in. wide and 11-7/8 in. high fabricated from galv steel. Aggregate damper openings shall not exceed 50 sq in. per 100 sq ft of ceiling area. Damper installed in accordance with the manufacturers installation instructions provided with the damper.
LLOYD INDUSTRIES INC — Model CRD 50-BT-6, CRD 50-EA-BT-6, CRD 55-BT-6, CRD 55 EA-BT-6
9H. **Alternate Ceiling Damper* —** (Optional. To be used with Air Duct Item 8). Ceiling damper & fan assembly for use with min 18 in. deep trusses. Not for use with flooring system 1 or 17. Max nom area shall be 103 sq in. with the length not to exceed 10-1/8 in. and the width not to exceed 10-1/8 in. Aggregate damper openings shall not exceed 52 sq in. per 100 sq ft of ceiling area. Damper shall be installed in combination with one of the fan models described in, and in accordance with, the manufacturer's installation instructions provided with the damper. A plastic grille (Item 10) shall be installed in accordance with installation instructions. **PANASONIC CORPORATION, PANASONIC CORPORATION OF NORTH AMERICA** — Model PC-RD05C5
9I. **Alternate Ceiling Damper* —** (Optional. To be used with Air Duct Item 8). Ceiling damper & fan assembly for use with min 18 in. deep trusses. Not for use with flooring system 1 or 17. Max nom area shall be 113 sq in. with the length not to exceed 10-1/8 in. and the width not to exceed 11-1/8 in. Aggregate damper openings shall not exceed 57 sq in. per 100 sq ft of ceiling area. Damper shall be installed in combination with one of the fan models described in, and in accordance with, the manufacturer's installation instructions provided with the damper. A plastic grille (Item 10) shall be installed in accordance with installation instructions.
BROAN-NUTONE L L C — Model RDFUWT
9K. **Alternate Ceiling Damper* —** (Optional. To be used with Air Duct Item 8). For use with min 18 in. deep trusses. Not for use with flooring system 1 or 17. Max plenum box size nom 19 in. long by 19 in. wide and 11-7/8 in. high fabricated from galv steel. Aggregate damper openings shall not exceed 128 sq in. per 100 sq ft of ceiling area. Damper installed in accordance with the manufacturers installation instructions provided with the damper.
METAL-FAB INC — Models MSCD-HC and MRCD-HC
9L. **Alternate Ceiling Damper* —** (Optional, To be used with Air Duct Item 8). Ceiling damper & fan assembly for use with min 18 in. deep trusses. Not for use with flooring system 1 or 17. Max nom area shall be 87 sq in. with the length not to exceed 9 in. and the width not to exceed 9-11/16 in. Aggregate damper openings shall not exceed 44 sq in. per 100 sq ft of ceiling area. Damper shall be installed in combination with one of the fan models described in, and in accordance with, the manufacturer's installation instructions provided with the damper. A plastic grille (Item 10) shall be installed in accordance with installation instructions. **BROAN-NUTONE L L C** — Model RDMWT
9M. **Alternate Ceiling Damper* —** (Optional. To be used with Air Duct Item 8) — For use with min 18 in. deep trusses. Not for use with flooring system 1 or 17. Max nom 21 in. long by 18 in. wide, fabricated from galvanized steel. Plenum box max size nom 21 in. long by 18 in. wide by 14 in. high (inner dimension) fabricated from either galvanized steel or min 1 in. thick Listed Duct Board bearing the UL Listing Marking having a min R-Value of 4.3. Installed in accordance with the instructions provided by the manufacturer. Max damper openings not to exceed 180 sq in. per 100 sq ft of ceiling area.
GREENHECK FAN CORP — Model CRD-1WT
9N. **Alternate Ceiling Damper* —** (Optional. To be used with Air Duct Item 8) — For use with min 18 in. deep trusses. Not for use with flooring system 1 or 17. Max nom 12 in. long by 12 in. wide with an 8 in. diameter damper, fabricated from galvanized steel. Installed in accordance with the instructions provided by the manufacturer. Max damper openings not to exceed 72 sq in. per 100 sq ft of ceiling area.
GREENHECK FAN CORP — Model CRD-2WT
9O. **Alternate Ceiling Damper* —** For use with min 18 in. deep trusses. Not for use with flooring system 1 or 17. Max nom area shall be 324 sq in. with the length not to exceed 24 in. and the width not to exceed 20 in. Max height of damper shall be 14 in. Aggregate damper openings shall not exceed 162 sq in. per 100 sq ft of ceiling area. Damper installed in accordance with the manufacturers installation instructions provided with the damper. A steel grille (Item 10) shall be installed in accordance with installation instructions. **C&S AIR PRODUCTS** — Model RD-521 **POTTORFF** — Model CFD-521. 9P. **Alternate Ceiling Damper* —** For use with min 18 in. deep trusses. Not for use with flooring system 1 or 17. Max nom area shall be 196 sq in. with the length not to exceed 26 in. and the width not to exceed 14 in. Max height of damper shall be 7 in. Aggregate damper openings shall not exceed 98 sq in. per 100 sq ft of ceiling area. Damper installed in accordance with the manufacturers installation instructions provided with the damper. A steel grille (Item 10) not to exceed 144 in.² shall be installed in accordance with installation instructions. **C&S AIR PRODUCTS** — Model RD-521-BT **POTTORFF** — Model CFD-521-BT. 9Q. **Alternate Ceiling Damper* —** For use with min 18 in. deep trusses. Not for use with flooring system 1 or 17. Max nom area shall be 256 sq in. with the length not to exceed 24 in. and the width not to exceed 20 in. Max height of damper shall be 17 in. Aggregate damper openings shall not exceed 128 sq in. per 100 sq ft of ceiling area. Damper installed in accordance with the manufacturers installation instructions provided with the damper. A steel grille (Item 10) shall be installed in accordance with installation instructions. **C&S AIR PRODUCTS** — Models RD-521-IP, RD-521-NP. **POTTORFF** — Models CFD-521-IP, CFD-521-NP. 9R. **Alternate Ceiling Damper* —** For use with min 18 in. deep trusses. Max nom area shall be 144 sq in. with the length not to exceed 14 in. and the width not to exceed 12 in. Max height of damper shall be 17-7/8 in. Aggregate damper openings shall not exceed 74 sq in. per 100 sq ft of ceiling area. Damper installed in accordance with the manufacturers installation instructions provided with the damper. A steel grille (Item 10) shall be installed in accordance with installation instructions. **POTTORFF** — Models CFD-521-90, CFD-521-90NP. 9S. **Alternate Ceiling Damper* —** (Optional. To be used with Air Duct Item 8.) — For use with Item 4D only. Not for use with flooring system 1. Max nom 8 in. diameter by 3-1/8 in. high, fabricated from galvanized steel. Plenum box max size nom 12 in. long by 12 in. wide by 3 in. high fabricated from galvanized steel. Installed in accordance with the instructions provided by the manufacturer. Max damper openings not to exceed 72 sq in. per 100 sq ft of ceiling area. **NAILOR INDUSTRIES INC** — Types 0755, 0755A **SAFE AIR DOWCO** — Types 0455, 0455A
10. **Grille —** Aluminum or Steel grille, installed in accordance with the installation instructions provided with the ceiling damper. 11. **Discrete Products Installed in Air-handling Spaces* —** Automatic Balancing Valve/Damper — (Not Shown - Optional) — For use with item 9A, Ruskin Company's Model CFD7T damper (CABS). Ceiling damper to be provided with plenum box per damper manufacturer's instructions with side outlet only. Entire assembly to be installed into any UL Class 0 or Class 1 flexible air duct in accordance with the instructions provided by the automatic balancing valve/damper manufacturer. **METAL INDUSTRIES INC** — Model ABV-4, ABV-5, ABV-6
*** Indicates such products shall bear the UL or cUL Certification Mark for jurisdictions employing the UL or cUL Certification (such as Canada), respectively**

Last Updated on 2019-05-23

ISSUE HISTORY

No.	Date	Description
1	04/15/2022	PERMIT SUBMITTAL

REVISION HISTORY

No.	Date	Description

FUGLEBERG KOCH
2555 Temple Trail, Winter Park, FL 32789 (407) 629-0595
www. fuglebergkoch.com AA26002103

CONSULTANT

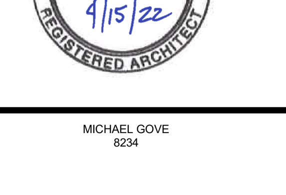

MICHAEL GOVE
8234

THE ROBERT MADISON MADISON, ALABAMA	Drawn:	MB
	Checked:	JK
	Approval:	MG
	Date:	04/15/2022
	Project #:	5722

UL REFERENCE DIRECTORY FLOOR SYSTEM

A0.33

PLOTTED: 5/3/2022 3:18:30 PM

© 2018 These documents and their contents are the property of FUGLEBERG KOCH - AA26002103, and are issued only for the specific project noted on these drawings. Any reproductions, revisions, or modifications of these documents without the expressed written consent of Fugleberg Koch is prohibited by law.

Design No. L574

June 19, 2018
Unrestrained Assembly Rating - 1 Hr
Finish Rating - 24 or 25 Min. (See Items 5, 5A and 5B)

This design was evaluated using a load design method other than the Limit States Design Method (e.g., Working Stress Design Method). For jurisdictions employing the Limit States Design Method, such as Canada, a load restriction factor shall be used **— See Guide BXUV or BXUV7**

* Indicates such products shall bear the UL or cUL Certification Mark for jurisdictions employing the UL or cUL Certification (such as Canada), respectively.

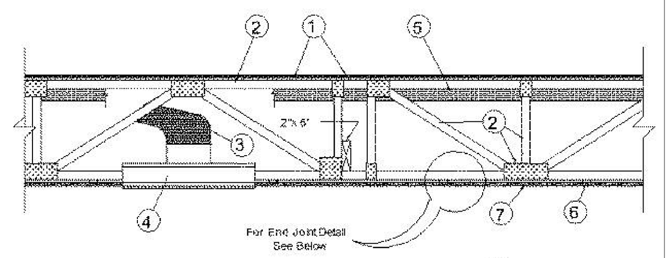

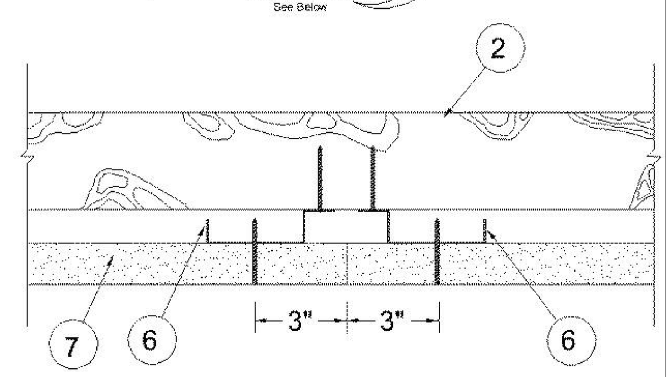

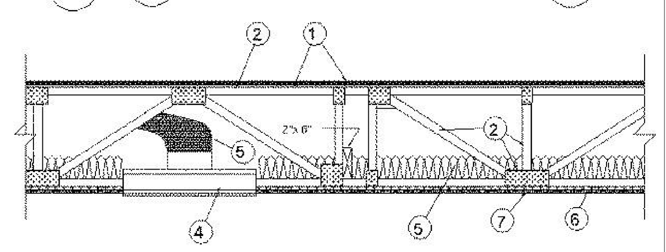

Alternate Insulation Placement

1. **Flooring System —** The flooring system shall consist of one of the following:

System No. 1
Subflooring — Min 23/32 in. thick plywood with T & G edges along the 8 ft sides and exterior glue or non-veneer APA Sturd-I-Floor T & G panels per APA specifications PRP 108. Face grain of plywood or strength axis of panel to be perpendicular to trusses with joints staggered 4 ft. Plywood or panels secured to trusses with No. 6d ring shank nails spaced 12 in. OC along each truss. Staples having equal or greater withdrawal and lateral resistance strength may be substituted for the 6d nails.
Vapor Barrier - (Optional) — Nom 0.030 in. thick commercial asphalt saturated felt.
Finish Flooring — Min 1 by 4 in. T & G lumber fastened diagonally to trusses, or min 15/32 in. plywood, min grade "Underlayment" or "Sturd-I-Floor" with T & G edges and conforming with PS1-83 specifications, or non-veneer APA rated Sturd-IFloor, T & G panels per APA specifications PRP-108. Face grain of plywood to be
perpendicular to joists with joints staggered.
System No. 2
Subflooring — Min 23/32 in. thick T & G wood structural panels installed perpendicular to trusses with joints staggered 4 ft. Plywood or non-veneer APA rated panels secured to trusses with construction adhesive and No. 6d ring shank nails spaced 12 in. OC along each truss. TetraGRIP™ nails measuring 2-3/8 in. long, 0.113 in. diameter, 0.272 in. round head, and helically threaded shank with barbed features on the helix meeting ASTM F1667 and having equal or greater withdrawal and lateral resistance strength may be substituted for the 6d nails. Staples having equal or greater withdrawal and lateral resistance strength may be substituted for the 6d nails.
Vapor Barrier - (Optional) — Nom 0.030 in. thick commercial asphalt saturated felt.
Finish Flooring - Floor Topping Mixture* — Min 3/4 in. thickness of floor topping mixture having a minimum compressive strength of 1500 psi. Refer to manufacturer's instructions accompanying the material for specific mix design.
RAPID FLOOR SYSTEMS — Type RF, RFP, RFU, Ortecrete
MAXXON CORP — Types D-C, GC, GC 2000, L-R, T-F, CT, SS
Floor Mat Materials* — Floor mat material loose laid over the subfloor. Refer to manufacturer's instructions regarding the minimum thickness of floor topping over each floor mat material.
Floor Mat Reinforcement - (Optional) — Refer to manufacturer's instructions regarding minimum thickness of floor topping over each floor mat material, primers, and use of crack suppression reinforcement.
MAXXON CORP — Crack Suppression Mat (CSM) or Maxxon Reinforcement (MR)
Metal Lath — (Optional - For use with or as an alternate to Crack Suppression Mat
(CSM) or Maxxon Reinforcement (MR)) — 3/8 in. expanded galvanized steel diamond mesh, 3.4 lbs/sq yd loose laid over the floor mat material. Floor topping thickness shall be min 1-1/2 in.
System No. 3
Subflooring — Min 3/4 in. thick wood structural panels, min grade "Underlayment" or "Single-Floor". Face grain of plywood or strength axis of panel to be perpendicular to joists with joints staggered. Long edges may be T & G or square.
Vapor Barrier - (Optional) — Nom 0.030 in. thick commercial asphalt saturated felt.
Finish Flooring - Floor Topping Mixture* — Min 3/4 or 1 in. thickness of floor topping mixture for 19/32 or 15/32 in. thick wood structural panels respectively, having a min compressive strength of 1000 psi. Refer to manufacturer's instructions accompanying the material for specific mix design.
FORMULATED MATERIALS LLC — Types FR-25, FR-30, and SiteMix
Alternate Floor Mat Material* - (Optional) — Floor mat material nominal 2 - 9.5 mm thick loose laid over the subfloor. Floor topping shall be a min of 3/4 in. or 1 in. thick for 19/32 or 15/32 in. thick wood structural panels respectively.
FORMULATED MATERIALS LLC — Types M1, M2, M3, R1, and R2
System No. 4
Subflooring — Min 23/32 in. thick plywood with T & G edges along the 8 ft sides and exterior glue or non-veneer APA Sturd-I-Floor T & G panels per APA specifications PRP 108. Face grain of plywood or strength axis of panel to be perpendicular to trusses with joints staggered 4 ft. Plywood or panels secured to trusses with No. 6d ring shank nails spaced 12 in. OC along each truss. Staples having equal or greater withdrawal and lateral resistance strength may be substituted for the 6d nails.
Vapor Barrier - (Optional) — Nom 0.010 in. thick commercial asphalt saturated felt.
Finish Flooring - Floor Topping Mixture* — Min 3/4 in. thickness of floor topping mixture having a minimum compressive strength of 1800 psi. Refer to manufacturer's instructions accompanying the material for specific mix design. **UNITED STATES GYPSUM CO —** Types LRK, HSLRK, CSD
Floor Mat Materials* - (Optional) — Floor mat material loose laid over the subfloor. Refer to manufacturer's instructions regarding the minimum thickness of floor topping over each floor mat material.
UNITED STATES GYPSUM CO — Types SAM, LEVELROCK® Brand Sound Reduction Board, LEVELROCK® Brand Floor Underlayment SRM-25
Alternate Floor Mat Materials* - (Optional) — Nom 3/8 in. thick floor mat material loose laid over the subfloor.
GRASSWORX LLC — Type SC50
System No. 5
Subflooring — Min 3/4 in. thick wood structural panels, min grade "Underlayment" or "Single-Floor". Face grain of plywood or strength axis of panel to be perpendicular to joists with joints staggered. Long edges may be T & G or square.
Vapor Barrier - (Optional) — Nom 0.030 in. thick commercial asphalt saturated felt.
Finish Flooring - Floor Topping Mixture* — Min 3/4 or 1 in. thickness of floor topping mixture for 19/32 or 15/32 in. thick wood structural panels respectively, having a min compressive strength of 1000 psi. Refer to manufacturer's instructions accompanying the material for specific mix design.
ACG MATERIALS — AccuCrete types NexGen, Green, Prime, B, M, and PrePour, AccuRadiant, AccuLevel types G40, G50 and SD30.
Alternate Floor Mat Material* - (Optional) — Floor mat material nominal 2 - 9.5 mm thick loose laid over the subfloor. Floor topping shall be a min of 3/4 in. or 1 in. thick for 19/32 or 15/32 in. thick wood structural panels respectively.
ACG MATERIALS — AccuQuiet types P80, C40, D13, D-18, D25, DX38, EM.125, EM.125S, EM.250, EM.250S, EM.375, EM.375S, EM.750, and EM.750S.
System No. 6
Subflooring — Min 23/32 in. thick wood structural panels, min grade "C-D" or "Sheathing". Face grain of plywood or strength axis of panels to be perpendicular to the joists with joints staggered.
Vapor Barrier - (Optional) — Commercial asphalt saturated felt, 0.030 in. thick.
Vapor Barrier - (Optional) — Nom 0.010 in. thick commercial rosin-sized building paper.
Finish Flooring* — Min 3/4 in. thickness of any Floor Topping Mixture bearing the UL Classification Marking as to Fire Resistance. See Floor- and Roof-Topping Mixtures (CCOX) category for names of Classified Companies.
Floor Mat Materials* - (Optional) — Nom. 1/4 in. thick loose laid over the subfloor. Floor topping thickness shall be a minimum of 3/4 in.
KEENE BUILDING PRODUCTS CO INC — Type Quiet Qurl 55/025 and Quiet Qurl 55/025 N
Alternate Floor Mat Materials* - (Optional) — Floor mat material Nom. 3/8 in. thick loose laid over the subfloor. Floor topping thickness shall be a minimum of 1 in.
KEENE BUILDING PRODUCTS CO INC — Type Quiet Qurl 60/040 and Quiet Qurl 60/040 N
Alternate Floor Mat Materials* - (Optional) — Floor mat material Nom. 3/4 in. thick loose laid over the subfloor. Floor topping thickness shall be a minimum of 11/2 in.
KEENE BUILDING PRODUCTS CO INC — Type Quiet Qurl 65/075, Quiet Qurl 65/075 N
Alternate Floor Mat Materials* - (Optional) — Floor mat material Nom. 1/8 in. thick loose laid over the subfloor. Floor topping thickness shall be a minimum of 3/4 in.
KEENE BUILDING PRODUCTS CO INC — Type Quiet Qurl 52/013 and Quiet Qurl 52/013 N
Alternate Floor Mat Materials* - (Optional) — Floor mat material Nom. 1/4 in. entangled net core with a compressible fabric attached to the bottom loose laid over the subfloor. Floor topping thickness shall be a minimum of 1 in.
KEENE BUILDING PRODUCTS CO INC — Quiet Qurl 55/025 MT and Quiet Qurl 55/025 N MT
System No. 7
Subfloor — Min 23/32 in. thick plywood with T & G edges along the 8 ft sides and exterior glue or non-veneer APA Sturd-I-Floor T & G panels per APA specifications PRP 108. Face grain of plywood or strength axis of panel to be perpendicular to trusses with joints staggered 4 ft. Plywood or panels secured to trusses with No. 6d ring shank nails spaced 12 in. OC along each truss. Staples having equal or greater withdrawal and lateral resistance strength may be substituted for the 6d nails.
Finish Flooring - Floor Topping Mixture* — Min 3/4 in. thickness of floor topping mixture having a min compressive strength of 1100 psi. Mixture shall consist of 6.8 gal of water to 80 lbs of floor topping mixture to 1.9 cu ft of sand.
HACKER INDUSTRIES INC — Firm-Fill Gypsum Concrete, Firm-Fill 2010, Firm-Fill 3310, Firm-Fill 4010, Firm-Fill High Strength and Gyp-Span Radiant
Metal Lath - (Optional) — For use with 3/8 in. (10 mm) floor mat materials, 3/8 in. expanded steel diamond mesh, 3.4 lbs/sq yd placed over the floor mat material. Hacker Floor Primer to be applied prior to the placement of the metal lath. When metal lath is used, floor topping thickness a nom 1-1/4 in. over the floor mat.

Floor Mat Materials* - (Optional) — Floor mat material nom 5/64 in. (2 mm) thick adhered to subfloor with Hacker Floor Primer. Primer to be applied to the surface of the mat prior to the placement of a min 1 in. of floor-topping mixture.
ECORE INTERNATIONAL INC — Type QTscu 4002
HACKER INDUSTRIES INC — Type Hacker Sound-Mat
Alternate Floor Mat Materials - (Optional) — Floor mat material nom 1/4 in. (6mm) thick adhered to subfloor with Hacker Floor Primer. Primer to be applied to the surface of the mat prior to the placement of a min 1-1/4 in. (32 mm) of floor-topping mixture.
ECORE INTERNATIONAL INC — Type QTrbm 3006-3
HACKER INDUSTRIES INC — Type Hacker Sound-Mat II.
Alternate Floor Mat Materials - (Optional) — Floor mat material nom 1/8 in. (3 mm) thick loose laid over the subfloor. Floor topping thickness shall be a min of 3/4 in. (19 mm).
HACKER INDUSTRIES INC — FIRM-FILL SCM 125
Alternate Floor Mat Materials - (Optional) — Floor mat material nom 1/4 in. (6 mm) thick loose laid over the subfloor. Floor topping thickness shall be a min of 1 in. (25 mm).
HACKER INDUSTRIES INC — Type FIRM-FILL SCM 250, Quiet Qurl 55/025
Alternate Floor Mat Materials - (Optional) — Floor mat material nom 3/8 in. (10 mm) thick loose laid over the subfloor. Floor topping thickness shall be a min of 1-1/4 in. (32 mm).
HACKER INDUSTRIES INC — FIRM-FILL SCM 400, Quiet Qurl 60/040
Alternate Floor Mat Materials - (Optional) — Floor mat material nom 3/4 in. (19 mm) thick loose laid over the subfloor. Floor topping thickness shall be a min of 1-1/2 in. (38 mm).
HACKER INDUSTRIES INC — Type FIRM-FILL SCM 750, Quiet Qurl 65/075
System No. 7
Subfloor — Min 23/32 in. thick plywood with T & G edges along the 8 ft sides and exterior glue or non-veneer APA Sturd-I-Floor T & G panels per APA specifications PRP 108. Face grain of plywood or strength axis of panel to be perpendicular to trusses with joints staggered 4 ft. Plywood or panels secured to trusses with No. 6d ring shank nails spaced 12 in. OC along each truss. Staples having equal or greater withdrawal and lateral resistance strength may be substituted for the 6d nails.
Finish Flooring - Floor Topping Mixture* — Min 3/4 in. thickness of floor topping mixture having a min compressive strength of 1100 psi. Mixture shall consist of 6.8 gal of water to 80 lbs of floor topping mixture to 1.9 cu ft of sand.
HACKER INDUSTRIES INC — Firm-Fill Gypsum Concrete, Firm-Fill 2010, Firm-Fill 3310, Firm-Fill 4010, Firm-Fill High Strength and Gyp-Span Radiant
Metal Lath - (Optional) — For use with 3/8 in. (10 mm) floor mat materials, 3/8 in. expanded steel diamond mesh, 3.4 lbs/sq yd placed over the floor mat material. Hacker Floor Primer to be applied prior to the placement of the metal lath. When metal lath is used, floor topping thickness a nom 1-1/4 in. over the floor mat.
Floor Mat Materials* - (Optional) — Floor mat material nom 5/64 in. (2 mm) thick adhered to subfloor with Hacker Floor Primer. Primer to be applied to the surface of the mat prior to the placement of a min 1 in. of floor-topping mixture.
ECORE INTERNATIONAL INC — Type QTscu 4002
HACKER INDUSTRIES INC — Type Hacker Sound-Mat
Alternate Floor Mat Materials - (Optional) — Floor mat material nom 1/4 in. (6mm) thick adhered to subfloor with Hacker Floor Primer. Primer to be applied to the surface of the mat prior to the placement of a min 1-1/4 in. (32 mm) of floor-topping mixture.
ECORE INTERNATIONAL INC — Type QTrbm 3006-3
HACKER INDUSTRIES INC — Type Hacker Sound-Mat II.
Alternate Floor Mat Materials - (Optional) — Floor mat material nom 1/8 in. (3 mm) thick loose laid over the subfloor. Floor topping thickness shall be a min of 3/4 in. (19 mm).
HACKER INDUSTRIES INC — FIRM-FILL SCM 125
Alternate Floor Mat Materials - (Optional) — Floor mat material nom 1/4 in. (6 mm) thick loose laid over the subfloor. Floor topping thickness shall be a min of 1 in. (25 mm).
HACKER INDUSTRIES INC — Type FIRM-FILL SCM 250, Quiet Qurl 55/025
Alternate Floor Mat Materials - (Optional) — Floor mat material nom 3/8 in. (10 mm) thick loose laid over the subfloor. Floor topping thickness shall be a min of 1-1/4 in. (32 mm).
HACKER INDUSTRIES INC — FIRM-FILL SCM 400, Quiet Qurl 60/040
Alternate Floor Mat Materials - (Optional) — Floor mat material nom 3/4 in. (19 mm) thick loose laid over the subfloor. Floor topping thickness shall be a min of 1-1/2 in. (38 mm).
HACKER INDUSTRIES INC — Type FIRM-FILL SCM 750, Quiet Qurl 65/075
System No. 8
Subflooring — Min 3/4 in. thick wood structural panels, min grade "Underlayment" or "Single-Floor". Face grain of plywood or strength axis of panel to be perpendicular to joists with joints staggered. Long edges may be T & G or square.
Vapor Barrier - (Optional) — Nom 0.030 in. thick commercial asphalt saturated felt.
Finish Flooring - Floor Topping Mixture* — Min 3/4 or 1 in. thickness of floor topping mixture for 19/32 or 15/32 in. thick wood structural panels respectively, having a min compressive strength of 1000 psi. Refer to manufacturer's instructions accompanying the material for specific mix design.
DEPENDABLE LLC — GSL M3.4, GSL K2.6, GSL-CSD and GSL RH.
Floor Mat Materials* - (Optional) — Nom. 1/4 in. thick loose laid over the subfloor. Floor topping thickness shall be a minimum of 3/4 in.
KEENE BUILDING PRODUCTS CO INC — Type Quiet Qurl 55/025 and Quiet Qurl 55/025 N
Alternate Floor Mat Materials* - (Optional) — Floor mat material Nom. 3/8 in. thick loose laid over the subfloor. Floor topping thickness shall be a minimum of 1 in.
KEENE BUILDING PRODUCTS CO INC — Type Quiet Qurl 60/040 and Quiet Qurl 60/040 N
Alternate Floor Mat Materials* - (Optional) — Floor mat material Nom. 3/4 in. thick loose laid over the subfloor. Floor topping thickness shall be a minimum of 11/2 in.
KEENE BUILDING PRODUCTS CO INC — Type Quiet Qurl 65/075, Quiet Qurl 65/075 N
Alternate Floor Mat Materials* - (Optional) — Floor mat material Nom. 1/8 in. thick loose laid over the subfloor. Floor topping thickness shall be a minimum of 3/4 in.
KEENE BUILDING PRODUCTS CO INC — Type Quiet Qurl 52/013 and Quiet Qurl 52/013 N
Alternate Floor Mat Materials* - (Optional) — Floor mat material Nom. 1/4 in. entangled net core with a compressible fabric attached to the bottom loose laid over the subfloor. Floor topping thickness shall be a minimum of 1 in.
KEENE BUILDING PRODUCTS CO INC — Quiet Qurl 55/025 MT and Quiet Qurl 55/025 N MT
System No. 9
Subflooring — Min 23/32 in. thick plywood with T & G edges along the 8 ft sides and exterior glue or non-veneer APA Sturd-I-Floor T & G panels per APA specifications PRP 108. Face grain of plywood or strength axis of panel to be perpendicular to trusses with joints staggered 4 ft. Plywood or panels secured to trusses with No. 6d ring shank nails spaced 12 in. OC along each truss. Staples having equal or greater withdrawal and lateral resistance strength may be substituted for the 6d nails.
Wall and Partition Facings and Accessories* - Sound Barrier (Optional) — Acoustic Sleeper pads stapled to the top of the subfloor and centered over trusses. Acoustic Sleeper pads are to be spaced appropriately so that the finish floor panels are fastened through Acoustic Sleeper pads to the trusses.
STC ARCHITECTURAL PRODUCTS L L C DBA STC SOUND CONTROL — Acoustic Sleeper
Finish Flooring — Min 15/32 in. plywood, min grade "Underlayment" or "Sturd-IFloor" with T & G edges and conforming with PS1-83 specifications, or non-veneer APA rated Sturd-I-Floor, T & G panels per APA specifications PRP-108. Face grain of plywood to be perpendicular to joists with joints staggered. Butt joints of panels have the option of being sealed with any UL Classified caulk or sealant found under - Fill, Void or Cavity Materials* (XHHW).
Trusses — Parallel chord trusses, spaced a max of 24 in. OC, fabricated from nom 2 by 4 lumber, with lumber oriented vertically or horizontally. Min truss depth is 18 in. when Ceiling Dampers* are used. Truss depth may be reduced to 12 in. when Ceiling Dampers* are not used. Truss members secured together with min 0.0356 in. thick galvanized steel plates. Plates have 5/16 in. long teeth projecting perpendicular to the plane of the plate. The teeth are in pairs facing each other (made by the same punch), forming a split tooth type plate. Each tool has a chisel point on its outside edge. These points are diagonally opposite each other for each pair. The top half of each tooth has a twist for stiffness. The pairs are repeated on approx. 7/8 in. centers with four rows of teeth per inch of plate width.
Air Duct* — Any UL Class 0 or Class 1 flexible air duct installed in accordance with the instructions provided by the damper manufacturer.
Ceiling Damper* — For use with min 18 in. deep trusses. Nom 20 in. long by 18 in. wide by 2-1/8 in. high, fabricated from galvanized steel. Plenum box max size nom 21 in. long by 18 in. wide by 16 in. high fabricated from either galvanized steel or Classified Air Duct Materials bearing the UL Classification Marking for Class 0 or Class 1 rigid air duct material. Installed in accordance with the instructions provided by the manufacturer. Max damper openings not to exceed 180 sq in. per 100 sq ft of ceiling area.
NAILOR INDUSTRIES INC — Types 0755, 0755A, 0756, 0756D, 0757, 0757D, 0757FP, 0757DFP, 0758, 0759, 0760, 0761, 0762, CRD5, CRD5D, CRD6, CRD6D, CRD6FP, CRD6DFP
Alternate Ceiling Damper* — For use with min 18 in. deep trusses. Max plenum box size nom 19 in. long by 19 in. wide and 11-7/8 in. high fabricated from galv steel. Aggregate damper openings shall not exceed 128 sq in. per 100 sq ft of ceiling area. Damper installed in accordance with the manufacturers installation instructions provided with the damper.
AIRE TECHNOLOGIES INC — Models: CRD model 50 w/Boot, CRD model 50EA w/Boot, CRD model 55 w/Boot, CRD model 55 EA w/Boot.
LLOYD INDUSTRIES INC — Model CRD 50-BT, CRD 50-EA-BT, CRD 55-BT, CRD 55 EA-BT
Alternate Ceiling Damper* — For use with min 18 in. deep trusses. Max plenum box size nom 13 in. long by 13 in. wide and 11-7/8 in. high fabricated from galv steel. Aggregate damper openings shall not exceed 50 sq in. per 100 sq ft of ceiling area. Damper installed in accordance with the manufacturers installation instructions provided with the damper.
LLOYD INDUSTRIES INC — Model CRD 50-BT-6, CRD 50-EA-BT-6, CRD 55-BT-6, CRD 55 EA-BT-6, CRD50-w X-BT-6
Alternate Ceiling Damper* — For use with min 18 in. deep trusses. Max size ceiling outlet in plenum box nom 12 in. long by 12 in. wide. Plenum box fabricated from galv steel. Aggregate damper openings shall not exceed 72 sq in. per 100 sq ft of ceiling area. Installed in accordance with the manufacturers installation instructions provided with the damper.
AIRE TECHNOLOGIES INC — Models: CRD model 50 w/Boot, CRD model 50EA w/Boot, CRD model 55 w/Boot, CRD model 55 EA w/Boot
LLOYD INDUSTRIES INC — Model CRD 50-95BT, CRD 50-EA-95BT, CRD 5595BT, CRD 55 EA-95BT
Alternate Ceiling Damper* — For use with min 18 in. deep trusses. Max size ceiling outlet in plenum box nom 16 in. long by 16 in. wide. Aggregate damper openings shall not exceed 128 sq in. per 100 sq ft of ceiling area. Damper installed in accordance with the manufacturers installation instructions provided with the damper.
LLOYD INDUSTRIES INC — Models: CRD50-FGPB-4.2, - 4.2 NI, -6.0, -6.0 NI;
CRD50-EA-FGPB-4.2, -4.2 NI, -6.0, -6.0 NI
Alternate Ceiling Damper* — For use with min 18 in. deep trusses. Max plenum box size nom 15 in. long by 15 in. wide and 11-7/8 in. high fabricated from galv steel. Aggregate damper openings shall not exceed 72 sq in. per 100 sq ft of ceiling area. Damper installed in accordance with the manufacturers installation instructions provided with the damper.
LLOYD INDUSTRIES INC — Models 45-CRD-LT-BT and 45-CRD-LTD-BT
Alternate Ceiling Damper* — For use with min 18 in. deep trusses. Max size ceiling outlet in plenum box nom 10 in. long by 10 in. wide. Plenum box fabricated from galv steel. Aggregate damper openings shall not exceed 50 sq in. per 100 sq ft of ceiling area. Installed in accordance with the manufacturers installation instructions provided with the damper.
LLOYD INDUSTRIES INC — Model 45-LTD-95-BT-4
Alternate Ceiling Damper* — For use with min 18 in. deep trusses. Max plenum box size nom 19 in. long by 15 in. wide and 11-7/8 in. high fabricated from galv steel. Aggregate damper openings shall not exceed 96 sq in. per 100 sq ft of ceiling area. Damper installed in accordance with the manufacturers installation instructions provided with the damper.
LLOYD INDUSTRIES INC — Model CRD50- w X-BT
Alternate Ceiling Damper* — For use with min 18 in. deep trusses. Max nom area shall be 324 sq in. Max square size shall be 18 in. by 18 in. Rectangular sizes not to exceed 324 sq in. with a max width of 18 in. Max height of damper shall be 14 in. Aggregate damper openings shall not exceed 162 sq in. per 100 sq ft of ceiling area. Damper installed in accordance with the manufacturers installation instructions provided with the damper. A steel grille (Item 9) shall be installed in accordance with installation instructions.
C&S AIR PRODUCTS — Model RD-521
POTTORFF — Model CFD-521.
Alternate Ceiling Damper* — For use with min 18 in. deep trusses. Max nom area shall be 196 sq in. Max square size shall be 14 in. by 14 in. Rectangular sizes not to exceed 196 sq in. with a max width of 26 in. Max height of damper shall be 7 in. Aggregate damper openings shall not exceed 98 sq in. per 100 sq ft of ceiling area. Damper installed in accordance with the manufacturers installation instructions provided with the damper. A steel grille (Item 9) not to exceed 144 in.2 shall be installed in accordance with installation instructions.
C&S AIR PRODUCTS — Model RD-521-BT
POTTORFF — Model CFD-521-BT
Alternate Ceiling Damper* — For use with min 18 in. deep trusses. Max nom area shall be 256 sq in. with the length not to exceed 24 in. and the width not to exceed 20 in. Max height of damper shall be 17 in. Aggregate damper openings shall not exceed 128 sq in. per 100 sq ft of ceiling area. Damper installed in accordance with the manufacturers installation instructions provided with the damper. A steel grille (Item 9) shall be installed in accordance with installation instructions.
POTTORFF — Models CFD-521-IP, CFD-521-NP

Alternate Ceiling Damper* — For use with min 18 in. deep trusses. Max nom area shall be 324 sq in. Max square size shall be 18 in. by 18 in. Rectangular sizes not to exceed 324 sq in. with a max width and max length of 18 in. Max round size shall be 18 in. dia. Aggregate damper openings shall not exceed 162 sq in. per 100sq ft of ceiling area. Damper installed in accordance with the manufacturers installation instructions provided with the damper.
RUSKIN COMPANY — Models CFD7-T, CFDR7-T
Alternate Ceiling Damper* — Ceiling damper & fan assembly for use with min 18 in. deep trusses. Max nom area shall be 75 sq in. with the length not to exceed 8 9/16 in. and the width not to exceed 8-3/4 in. Max height of damper shall be 9-7/8 in. Aggregate damper openings shall not exceed 38 sq in. per 100 sq ft of ceiling area. Damper shall be installed in combination with one of the fan models described in, and in accordance with, the manufacturers installation instructions provided with the damper. A plastic grille shall be installed in accordance with installation instructions.
DELTA ELECTRONICS INC — Models CRD2, GBR-CRD, ITG-CRD
Alternate Ceiling Damper* — Ceiling damper & fan assembly for use with min 18 in. deep trusses. Max nom area shall be 131 sq in. with the length not to exceed 11-1/16 in. and the width not to exceed 11-7/8 in. Aggregate damper openings shall not exceed 66 sq in. per 100 sq ft of ceiling area. Damper shall be installed in combination with one of the fan models described in, and in accordance with, the manufacturer's installation instructions provided with the damper. A plastic grille (Item 9) shall be installed in accordance with installation instructions.
DELTA ELECTRONICS INC — Model SMT-CRD
Alternate Ceiling Damper* — For use with min 18 in. deep trusses. Max nom area shall be 324 sq in. Max square size shall be 18 in. by 18 in. Rectangular sizes not to exceed 324 sq in. with a max length of 20 in. and a max width of 22 in. Max height of damper shall be 14 in. Aggregate damper openings shall not exceed 154 sq in. per 100 sq ft of ceiling area. Damper installed in accordance with the manufacturer's installation instructions provided with the damper. An aluminum or steel grille shall be installed in accordance with installation instructions.
UNITED ENERTECH CORP — Type C-S/R-WT or C-S/R-WTP (Max nom area 324 sq. in.) or C-S/R-WTS or C-S/R-WTPS (Max nom area 162 sq. in.)
Alternate Ceiling Damper* — Ceiling damper & fan assembly for use with min 18 in. deep trusses. Max nom area shall be 75 sq in. with the length not to exceed 91/4 in. and the width not to exceed 9-3/4 in. Max height of damper shall be 9-7/8 in. Aggregate damper openings shall not exceed 45 sq in. per 100 sq ft of ceiling area. Damper shall be installed in combination with one of the fan models described in, and in accordance with, the manufacturer's installation instructions provided with the damper. A plastic grille (Item 9) shall be installed in accordance with installation instructions.
DELTA ELECTRONICS INC — Model SIG-CRD
Alternate Ceiling Damper* — Ceiling damper & fan assembly for use with min 18 in. deep trusses. Max nom area shall be 103 sq in. with the length not to exceed 10-1/8 in. and the width not to exceed 10-1/8 in. Aggregate damper openings shall not exceed 52 sq in. per 100 sq ft of ceiling area. Damper shall be installed in combination with one of the fan models described in, and in accordance with, the manufacturer's installation instructions provided with the damper. A plastic grille (Item 9) shall be installed in accordance with installation instructions.
PANASONIC CORPORATION, PANASONIC CORPORATION OF NORTH AMERICA — Model PC-RD05C5
Alternate Ceiling Damper* — Ceiling damper & fan assembly for use with min 18 in. deep trusses. Max nom area shall be 113 sq in. with the length not to exceed 10-1/8 in. and the width not to exceed 11-1/8 in. Aggregate damper openings shall not exceed 57 sq in. per 100 sq ft of ceiling area. Damper shall be installed in combination with one of the fan models described in, and in accordance with, the manufacturer's installation instructions provided with the damper. A plastic grille (Item 9) shall be installed in accordance with installation instructions.
BROAN-NUTONE LLC — Model RDFUWT
Alternate Ceiling Damper* — Ceiling damper & fan assembly for use with min 18 in. deep trusses. Max nom area shall be 79 sq in. with the length not to exceed 10 in. and the width not to exceed 7-15/16 in. Aggregate damper openings shall not exceed 40 sq in. per 100 sq ft of ceiling area. Damper shall be installed in combination with one of the fan models described in, and in accordance with, the manufacturer's installation instructions provided with the damper. A metallic grille (Item 9) shall be installed in accordance with installation instructions.
BROAN-NUTONE LLC — Models RDJ1 and RDH
Alternate Ceiling Damper* — For use with min 18 in. deep trusses Max plenum box size nom 19 in. long by 19 in. wide and 11-7/8 in. high fabricated from galv steel. Aggregate damper openings shall not exceed 128 sq in. per 100 sq ft of ceiling area. Damper installed in accordance with the manufacturers installation instructions provided with the damper.
METAL-FAB INC — Models MSCD-HC and MRCD-HC
Alternate Ceiling Damper* — Ceiling damper & fan assembly for use with min 18 in. deep trusses. Max nom area shall be 87 sq in. with the length not to exceed 9 in. and the width not to exceed 9-11/16 in. Aggregate damper openings shall not exceed 44 sq in. per 100 sq ft of ceiling area. Damper shall be installed in combination with one of the fan models described in, and in accordance with, the manufacturer's installation instructions provided with the damper. A plastic grille (Item 9) shall be installed in accordance with installation instructions.
BROAN-NUTONE LLC — Model RDMWT
Alternate Ceiling Damper* — (Optional, to be used with Air Duct Item 3) — For use with min 18 in. deep trusses. Max nom 21 in. long by 18 in. wide, fabricated from galvanized steel. Plenum box max size nom 21 in. long by 18 in. wide by 14 in. high (inner dimension) fabricated from either galvanized steel or min 1 in. thick Listed Duct Board bearing the UL Listing Marking having a min R-Value of 4.3. Installed in accordance with the instructions provided by the manufacturer. Max damper openings not to exceed 180 sq in. per 100 sq ft of ceiling area.
GREENHECK FAN CORP — Model CRD-1WT
Alternate Ceiling Damper* — (Optional, to be used with Air Duct Item 3) — For use with min 18 in. deep trusses. Max nom 12 in. long by 12 in. wide with an 8 in. diameter damper, fabricated from galvanized steel. Installed in accordance with the instructions provided by the manufacturer. Max damper openings not to exceed 72 sq in. per 100 sq ft of ceiling area.
GREENHECK FAN CORP — Model CRD-2WT
Alternate Ceiling Damper* — (Optional. To be used with Air Duct Item 3.) For use with min 18 in. deep trusses. Max 12 in. diameter damper and insulated register box assembly. The maximum size of the register box assembly is nom. 20 in. long by 20 in. wide and 4 in. high fabricated from galv steel. The aggregate area of the register opening(s) through the ceiling membrane shall not exceed 128 sq in. per 100 sq ft of ceiling area. Damper assembly installed in accordance with the manufacturers installation instructions.
AIRE TECHNOLOGIES INC — Model 57IB.
Alternate Ceiling Damper* — (Optional. To be used with Air Duct Item 3.) For use with min 18 in. deep trusses. Max 20 in. long by 16 in. wide by 4 in. high rectangular damper with plenum box assembly. The maximum outer dimensions of the plenum box assembly is 23-1/2 in. long by 19-1/2 in. wide and 17 in. high fabricated from 6pcf, 1-1/2 to 2 in. thick Knauf Air Duct Board M*. The aggregate area of the register opening(s) through the ceiling membrane shall not exceed 160 sq in. per 100 sq ft ceiling area. Damper assembly installed in accordance with the manufacturers installation instructions.
AIRE TECHNOLOGIES INC — Series 58.
Alternate Ceiling Damper* - (Optional. To be used with Air Duct Item 3.) — For use with min 18 in. deep trusses. Max 14 in. long by 14 in. wide and 18 in. high ceiling damper with boot or box assembly, fabricated from galv steel. The aggregate area of the register opening(s) through the ceiling membrane shall not exceed 98 sq in. per 100 sq ft of ceiling area. Damper assembly installed in accordance with the manufacturers installation instructions.
AIRE TECHNOLOGIES INC — Model 51 w/Boot.
Batts and Blankets* - (Optional) — When truss depth is 18 in. or greater, insulation is optional. Insulation may alternately be secured to plywood subfloor with staples spaced 12 in. OC or to the trusses with 0.090 in. diam galv steel wires spaced 12 in. OC. Insulation may be draped over the resilient channels and gypsum board ceiling membrane and the resilient channels and gypsum board attachment shall be modified as specified in Items 6 and 7. Any glass fiber insulation bearing the UL Classification Marking for Surface Burning Characteristics and/or Fire Resistance, and having a min density of 0.5 pcf and a max thickness of 3-1/2 in.
may be used. When Type AG-C gypsum panels are used, there is no limit on overall thickness. The Finish Rating is 24 min. when the insulation is draped over the resilient channels and gypsum board ceiling membrane and 25 min. when it is installed on underside of the plywood subfloor or when it is omitted.
Loose Fill Material* - (Optional) — Loose fill material may be used as an alternate to batt insulation (Item 5). When used, the resilient channel and gypsum board attachment is modified as specified in Items 6 and 7. Any loose fill material bearing the UL Classification Marking for Surface Burning Characteristics, having a min density of 0.5 pcf and installed at a max thickness of 3-1/2 in. may be used. When Type AG-C gypsum panels are used, there is no limit on overall thickness. The finished rating when loose fill material is used has not been determined.
Resilient Channels — formed of 25 MSG galv steel, spaced 16 in. OC perpendicular to trusses. When batt insulation (Item 5) is draped over the resilient channel/gypsum board ceiling membrane, or when loose fill insulation (Item 5A) is used, the resilient channel spacing shall be reduced to 12 in. OC. Channels secured to each truss with 1-1/4 in. long Type S bugle head steel screws. Channels overlapped 4 in. at splices. Two channels, spaced 6 in. OC, oriented opposite each gypsum board end joint as shown in the above illustration. Additional channels shall extend min 6 in. beyond each side edge of board.
Steel Framing Members* - (Not Shown) — As an alternate to Resilient Channels, furring channels and Steel Framing Members* as described below:
Furring Channels — Formed of No. 25 MSG galv steel, 2-9/16 in. or 2-23/32 in. wide by 7/8 in. deep, spaced 24 in. OC perpendicular to trusses. When batt insulation (Items 5) is draped over the resilient channel/gypsum board ceiling membrane, the resilient channel spacing shall be reduced to 12 in. OC. Channels secured to trusses as described in Item b. Ends of adjoining channels overlapped 6 in. and tied together with double strand of No. 18 SWG galv steel wire near each end of overlap.
Steel Framing Members* — Used to attach furring channels (Item a) to trusses (Item 2). Clips spaced 48 in. OC. RSIC-1 and RSIC-1 (2.75) clips secured to alternating trusses with No. 8 x 2-1/2 in. coarse drywall screw through the center grommet. RSIC-V and RSIC-V (2.75) clips secured to alternating trusses with No. 8 x 11/2 in. coarse drywall screw through the center hole. Furring channels are friction fitted into clips. RSIC-1 and RSIC-V clips for use with 2-9/16 in. wide furring channels. RSIC-1 (2.75) and RSICV (2.75) clips for use with 2-23/32 in. wide furring channels. Adjoining channels are overlapped as described in Item a. As an alternate, ends of adjoining channels may be overlapped 6 in. and secured together with two self-tapping No. 6 framing screws, min 7/16 in. long at the midpoint of the overlap, with one screw on each flange of the channel. Additional clips required to hold furring channel that supports the gypsum board butt joints, as described in the Gypsum Board section.
PAC INTERNATIONAL LLC — Types RSIC-1, RSIC-V, RSIC-1 (2.75), RSIC-V (2.75)
Steel Framing Members* - (Not Shown) — As an alternate to above Items.
Furring Channels — Formed of No. 25 MSG galv steel, 2-3/8 in. wide by 7/8 in. deep, spaced 16 in. OC perpendicular to wood structural members. When insulation, Items 5, 5A or 5B is applied over the furring channel/gypsum panel ceiling membrane, the furring channel spacing shall be reduced to 12 in. OC. Channels secured to trusses as described in Item b. Ends of adjoining channels overlapped 6 in. and tied together with double strand of No. 18 AWG galvanized steel wire near each end of overlap.
Steel Framing Members* — Used to attach furring channels (Item a) to trusses (Item 2). Clips spaced 48 in. OC, and secured to the bottom chord of alternating trusses with one No. 8 x 2-1/2 in. coarse drywall screw through center grommet. When insulation, Items 5, 5A or 5B is applied over the furring channel/gypsum panel ceiling membrane, the clip spacing shall be reduced to 24 in. OC and secured to consecutive trusses. Furring channels are friction fitted into clips. Adjoining channels are overlapped as described in Item a. As an alternate, ends of adjoining channels may be overlapped 6 in. and secured together with two self-tapping No. 6 framing screws, min 7/16 in. long at the midpoint of the overlap, with one screw on each flange of the channel. Additional clips required to hold furring channel that supports the gypsum board butt joints, as described in Item 7.
PLITEQ INC — Type Genie Clip
Alternate Steel Framing Members* - (Not Shown) — As an alternate to items 6, 6A and 6B, furring channels and Steel Framing Members as described below.
Furring Channels — Formed of No. 25 MSG galv steel, 2-5/8 in. wide by 7/8 in deep, spaced 16 in. OC, perpendicular to joists. When batt insulation (Items 5, 5A, 5B) is draped over the resilient channel/gypsum board ceiling membrane, the resilient channel spacing shall be reduced to 12 in. OC. Channels secured to trusses as described in Steel Framing Members.
Steel Framing Members* — Used to attach furring channels (Item a) to the trusses (Item 2). Clips spaced at 48" OC and secured to the bottom of the joists with one 2 in. coarse drywall screw with 1 in. diam washer through the center hole. Furring channels are then friction fitted into clips. Ends of channels are overlapped 6" and tied together with double strand of No. 18 AWG galvanized steel wire. Additional clips are required to hold the Gypsum Butt joints as described in Item 7.
STUDCO BUILDING SYSTEMS — RESILMOUNT Sound Isolation
Clips — Type A237 or A237R

Gypsum Board* — Nom 5/8 in. thick, 48 in. wide gypsum board installed with long dimension perpendicular to resilient channels. Gypsum board secured with 1 in. long Type S bugle head steel screws spaced 12 in. OC and located a min of 1/2 in. from side joints and 3 in. from the end joints. End joints secured to both resilient channels as shown in end joint details. When batt insulation is draped over the resilient channel/gypsum board ceiling membrane, or when loose fill insulation (Item 5A) is used, screws spacing shall be 8 in. OC. When Steel Framing Members (Item 6B) are used, one layer of nom 5/8 in. thick, 4 ft wide gypsum board is installed with long dimensions perpendicular to furring channels. Gypsum board secured to furring channels with nom 1 in. long No. 6 Type S bugle-head steel screws spaced 12 in. OC in the field of the board. Screw spacing is reduced to 8 in. OC when insulation is applied over the furring channel/gypsum panel ceiling membrane. Gypsum board butted end joints shall be staggered minimum 16 in. within the assembly. At the gypsum board butt joints, each end of each gypsum board shall be supported by a single length of furring channel equal to the width of the gypsum board plus 6 in. on each end. These additional furring channels shall be attached to underside of the truss with Genie clips as described in Item 6B. Screw spacing along the gypsum board butt joint shall be 6 in. OC. When Steel Framing Members (Item 6C) are used, one layer of nom 5/8 in. thick, 4 ft wide gypsum board is installed with long dimensions perpendicular to furring channels. Gypsum board secured to furring channels with nom 1 in. long Type S bugle-head steel screws spaced 8 in. OC in the field of the board. Gypsum board butted end joints shall be staggered minimum 48 in. and centered over main furring channels. At the gypsum board butt joints, each end of each gypsum board shall be supported by a single length of furring channel equal to the width of the gypsum board plus 3 in. on each end. The two support furring channels shall be spaced approximately 3 in. in from joint. Screw spacing along the gypsum board butt joint and along both additional channels shall be 8 in. OC. Additional screws shall be placed in the adjacent section of gypsum board into the aforementioned 3 in. extension of the extra butt joint channels as well as into the main channel that runs between. Butt joint furring channels shall be attached with one RESILMOUNT Sound Isolation Clip at each end of the channel.
AMERICAN GYPSUM CO — Types AG-C
GEORGIA-PACIFIC GYPSUM LLC — Type TG-C
Finishing System - (Not Shown) — Vinyl, dry or premixed joint compound, applied in two coats to joints and screw-heads. Nom 2 in. wide paper tape embedded in first layer of compound over all joints. As an alternate, nom 3/32 in. thick veneer plaster may be applied to the entire surface of gypsum board.
Grille — Grille installed in accordance with the installation instructions provided with the ceiling damper.
UL and the UL logo are trademarks of UL LLC © 2018 All Rights Reserved.
Discrete Products Installed in Air-handling Spaces* — Automatic Balancing Valve/Damper — (Not Shown - Optional) — For use with item 4K, Ruskin Company's Model CFD7T damper (CABS). Ceiling damper to be provided with plenum box per damper manufacturer's instructions with side outlet only. Entire assembly to be installed into any UL Class 0 or Class 1 flexible air duct in accordance with the instructions provided by the automatic balancing valve/damper manufacturer.
METAL INDUSTRIES INC — Model ABV-4, ABV-5, ABV-6

* Indicates such products shall bear the UL or cUL Certification Mark for jurisdictions employing the UL or cUL Certification (such as Canada), respectively.
Last Updated on 2018-06-19
Design/System/Construction/Assembly Usage Disclaimer:
Authorities Having Jurisdiction should be consulted in all cases as to the particular requirements covering the installation and use of UL Certified products, equipment, system, devices, and materials.
Authorities Having Jurisdiction should be consulted before construction.
Fire resistance assemblies and products are developed by the design submitter and have been investigated by UL for compliance with applicable requirements. The published information cannot always address every construction nuance encountered in the field.
When field issues arise, it is recommended the first contact for assistance be the technical service staff provided by the product manufacturer noted for the design. Users of fire resistance assemblies are advised to consult the general Guide Information for each product category and each group of assemblies. The Guide Information includes specifics concerning alternate materials and alternate methods of construction.
Only products which bear UL's Mark are considered Certified.
The appearance of a company's name or product in this database does not in itself assure that products so identified have been manufactured under UL's Follow-Up Service. Only those products bearing the UL Mark should be considered to be Certified and covered under UL's Follow-Up Service. Always look for the Mark on the product.

UL permits the reproduction of the material contained in the Online Certification Directory subject to the following conditions: 1. The Guide Information, Assemblies, Constructions, Designs, Systems, and/or Certifications (files) must be presented in their entirety and in a non-misleading manner, without any manipulation of the data (or drawings). 2. The statement "Reprinted from the Online Certifications Directory with permission from UL" must appear adjacent to the extracted material. In addition, the reprinted material must include a copyright notice in the following format: "© 2018 UL LLC".

ISSUE HISTORY

No.	Date	Description
1	04/15/2022	PERMIT SUBMITTAL

REVISION HISTORY

No.	Date	Description

FUGLEBERG KOCH
2555 Temple Trail, Winter Park, FL 32789 (407) 629-0595
www. fuglebergkoch.com AA26002103

CONSULTANT

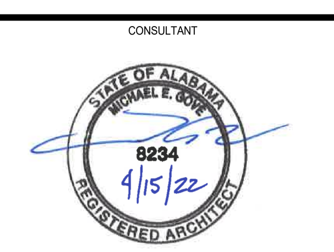

MICHAEL GOVE
8234

THE ROBERT MADISON
MADISON, ALABAMA

Drawn:	MB
Checked:	JK
Approval:	MG
Date:	04/15/2022
Project #:	5722

UL REFERENCE DIRECTORY FLOOR SYSTEM

A0.34

PLOTTED: 5/3/2022 3:18:32 PM

© 2018 These documents and their contents are the property of FUGLEBERG KOCH - AA26002103, and are issued only for the specific project noted on these drawings. Any reproductions, revisions, or modifications of these documents without the expressed written consent of Fugleberg Koch is prohibited by law.

Design No. P544

August 16, 2017

Unrestrained Assembly Rating — 1 Hr.
Finish Rating — 25 Min. (See Items 3 or 3A and 7), 20 Min. (See Items 3B and 7A)
This design was evaluated using a load design method other than the Limit States Design Method (e.g., Working Stress Design Method). For jurisdictions employing the Limit States Design Method, such as BXUV or BXUV7

*** Indicates such products shall bear the UL or cUL Certification Mark for jurisdictions employing the UL or cUL Certification (such as Canada), respectively.**

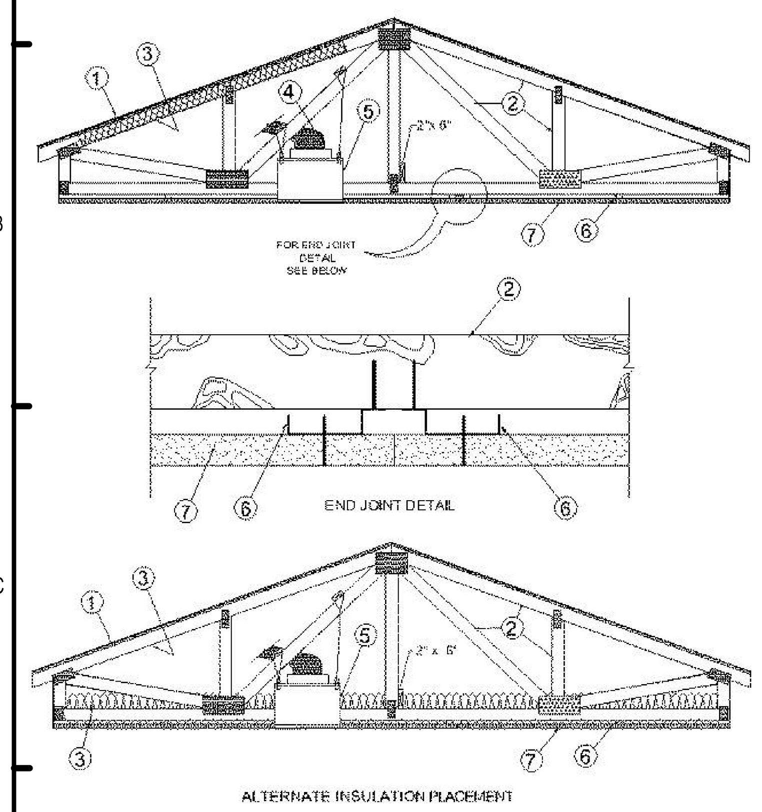

1. **Roofing System* —** Any UL Class A, B or C Roofing System **(TGFU)** or Prepared Roof Covering **(TFWZ)** acceptable for use over nom 15/32 in. thick wood structural panels, min. grade "C-D" or "Sheathing". Nom 15/32 in. thick wood structural panels secured to trusses with construction adhesive and No. 6d ringed shank nails. Nails spaced 12 in. OC along each truss. Staples having equal or greater withdrawal and lateral resistance strength may be substituted for the 6d nails.
2. **Trusses —** Pitch or Parallel chord trusses, spaced a max of 24 in. OC, fabricated from nom 2 by 4 lumber, with lumber oriented vertically or horizontally. Truss members secured together with 0.0356 in. thick galv steel plates. Plates have 5/16 in. long teeth projecting perpendicular to the plane of the plate. The teeth are in pairs facing each other (made by the same punch), forming a split tooth type plate. Each tooth has a chisel point on its outside edge. These points are diagonally opposite each other for each pair. The top half of each tooth has a twist for stiffness. The pairs are repeated on approximately 7/8 in. centers with four rows of teeth per inch of plate width. Where the truss intersects with the interior face of the exterior walls, the min truss depth shall be 5-1/4 in. with a min roof slope of 3/12 and a min. area in the plane of the truss of 21 sq/ft. Where the truss intersects with the interior face of the exterior walls, the min truss depth may be reduced to 3 in. if the batts and blankets (Item 3) are used as shown in the above illustration (Alternate Insulation Placement) and are firmly packed against the intersection of the bottom chords and the plywood sheathing.
3. **Batts and Blankets* —** (Optional) — Glass fiber insulation, secured to the wood structural panels with staples spaced 12 in. OC or to the trusses with 0.090 in. diam galv steel wires spaced 12 in. OC. Any glass fiber insulation bearing the UL Classification Marking as to Surface Burning Characteristics and/or Fire Resistance, having a min density of 0.5 pcf. As an option, the insulation may be fitted in the concealed space, draped over the resilient channel/gypsum wallboard ceiling membrane when resilient channels and gypsum wallboard attachment is modified as specified in Items 6 and 7. The finished rating has only been determined when the insulation is secured to the decking.

3A. **Cavity Insulation - Loose Fill Material* — (Not Shown) —** As an alternate to Item 3 — Any thickness of loose fill material bearing the UL Classification Marking for Surface Burning Characteristics, having a min density of 0.5 pcf, fitted in the concealed space, draped over the resilient channel/gypsum wallboard ceiling membrane when resilient channels and gypsum wallboard attachment is modified as specified in Items 6 and 7. The finished rating when loose fill material is used has not been determined.

3B. **Cavity Insulation - Batts and Blankets* or Loose Fill Material* — (Not Shown) —** (As described above in Items 3 and 3A) — (For Use with Item 7A, Not Shown) — Min. 3-1/2 in thick with no limit on maximum thickness fitted in the concealed space, draped over the resilient channel (Item 6A)/gypsum board (Item 7A) ceiling membrane.

4. **Air Duct* —** Any UL Class 0 or Class 1 flexible air duct installed in accordance with the instructions provided by the damper manufacturer.
5. **Ceiling Damper* —** Maximum plenum box size nom. 19 in. long by 19 in. wide and 11-7/8 in. high fabricated from galvanized steel. Installed in accordance with the manufacturers installation instructions provided with the damper. Maximum damper openings not to exceed 128 sq. in. per 100 sq ft of ceiling area.

AIRE TECHNOLOGIES INC — Models: CRD model 50 w/Boot, CRD model 50EA w/Boot, CRD model 55 w/Boot, CRD model 55 EA w/Boot
LLOYD INDUSTRIES INC — Model CRD 50-BT, CRD 50-EA-BT, CRD 55-BT, CRD 55 EA-BT

5A. **Ceiling Damper* —** Maximum plenum box size nom. 13 in. long by 13 in. wide and 11-7/8 in. high fabricated from galvanized steel. Installed in accordance with the manufacturers installation instructions provided with the damper. Maximum damper openings not to exceed 50 sq. in. per 100 sq ft of ceiling area.
HEATING AND COOLING PRODUCTS — Models 272-1, 272-2
LLOYD INDUSTRIES INC — Model CRD 50-BT-6, CRD 50-EA-BT-6, CRD 55-BT-6, CRD 55 EA-BT-6, CRD50-ʷ X-BT-6.

5B. **Ceiling Damper* —** Maximum size ceiling outlet in plenum box nom. 12 in. long by 12 in. wide. Plenum box fabricated from galvanized steel. Installed in accordance with the manufacturers installation instructions provided with the damper. Maximum damper openings not to exceed 72 sq. in. per 100 sq ft of ceiling area.
AIRE TECHNOLOGIES INC — Models: CRD model 50 w/Boot, CRD model 50EA w/Boot, CRD model 55 w/Boot, CRD model 55 EA w/Boot
LLOYD INDUSTRIES INC — Model CRD 50-95BT, CRD 50-EA-95BT, CRD 55-95BT, CRD 55 EA-95BT

5C. **Alternate Ceiling Damper* —** (Optional) — For use with min 18 in. deep trusses. Max size ceiling outlet in plenum box nom 16 in. long by 16 in. wide. Aggregate damper openings shall not exceed 128 sq in. per 100 sq ft of ceiling area. Damper installed in accordance with the manufacturers installation instructions provided with the damper.
CROWN PRODUCTS CO INC — Models CRD50-FGPB-4.2-CP, -6.0-CP; CRD50-FGPB-4.2-EA-CP, -6.0-EA-CP
LLOYD INDUSTRIES INC — Models CRD 50- FGPB-4.2, - 4.2 NI, -6.0, -6.0 NI; CRD50-EA-FGPB-4.2, -4.2 NI, -6.0, -6.0 NI

5D. **Ceiling Damper* —** (Optional) — For use with min 18 in. deep trusses Max plenum box size nom 15 in. long by 15 in. wide and 11-7/8 in. high fabricated from galv steel. Aggregate damper openings shall not exceed 72 sq in. per 100 sq ft of ceiling area. Damper installed in accordance with the manufacturers installation instructions provided with the damper.
LLOYD INDUSTRIES INC — Models 45-CRD-LT-BT and 45-CRD-LTD-BT

5E. **Ceiling Damper* —** (Optional) — For use with min 18 in. deep trusses Max size ceiling outlet in plenum box nom 10 in. long by 10 in. wide. Plenum box fabricated from galv steel. Aggregate damper openings shall not exceed 50 sq in. per 100 sq ft of ceiling area. Installed in accordance with the manufacturers installation instructions provided with the damper.
LLOYD INDUSTRIES INC — Model 45-LTD-95-BT-4

5F. **Alternate Ceiling Damper* —** For use with min 18 in. deep trusses Max plenum box size nom 19 in. long by 15 in. wide and 11-7/8 in. high fabricated from galv steel. Aggregate damper openings shall not exceed 96 sq in. per 100 sq ft of ceiling area. Damper installed in accordance with the manufacturers installation instructions provided with the damper.
LLOYD INDUSTRIES INC — Model CRD50-ʷ X-BT

5G. **Alternate Ceiling Damper* —** For use with min. 18 in. deep trusses. Max. nom area shall be 349 sq in. Max. overall length and width shall not exceed 18-11/16 in. by 18-11/16 in. with max. 16 in. by 16 in. register opening. Aggregate damper openings shall not exceed 175 sq in. per 100 sq ft of ceiling area. Damper installed in accordance with the manufacturers installation instructions provided with the damper. An aluminum or steel grille (Item 9) shall be installed in accordance with installation instructions.
MIAMI TECH INC — Model Series RxCRD, RxCRDS or RxCRPD

5H. **Alternate Ceiling Damper* —** For use with min 18 in. deep trusses Max plenum box size nom 19 in. long by 19 in. wide and 11-7/8 in. high fabricated from galv steel. Aggregate damper openings shall not exceed 128 sq in. per 100 sq ft of ceiling area. Damper installed in accordance with the manufacturers installation instructions provided with the damper.
METAL-FAB INC — Models MSCD-HC and MRCD-HC

6. **Resilient Channels —** Resilient channels formed of 25 MSG thick galv steel, spaced 16 in. OC, installed perpendicular to trusses. When batt and blanket material, Item 3, is draped over the resilient channel/gypsum wallboard ceiling membrane, the spacing shall be 12 in. OC. Channels secured to each truss with 1-1/4 in. long Type S steel screws. Channels overlapped 4 in. at splices. Channels oriented opposite at wallboard butt joints (spaced 6 in. OC) as shown in the above illustration.

6A. **Resilient Channels - (Not Shown) —** For Use With Item 7A - Formed from min 25 MSG galv steel installed perpendicular to trusses and spaced 16 in. OC. Channels secured to each truss with 1-5/8 in. long Type S bugle head steel screws. Channels overlapped 4 in. at splices. Two channels, spaced 6 in. OC, oriented opposite each gypsum panel end joint. Additional channels shall extend min 6 in. beyond each side edge of panel. Insulation, Items 3A or 3B, is applied over the resilient channel/gypsum panel (Item 7A) ceiling membrane.

7. **Gypsum Board* —** Nom 5/8 in. thick, 48 in. wide, installed with long dimension perpendicular to resilient channels with 1 in. long Type S screws spaced 12 in. OC and located a min of 3/4 in. from side joints and 3 in. from the end joints. At end joints, two resilient channels are used, extending a min of 6 in. beyond both ends of the joint. When batt and blanket insulation, Item 3, is draped over the resilient channel/gypsum wallboard ceiling membrane, screws shall be installed at 8 in. OC.
AMERICAN GYPSUM CO — Type AG-C
CGC INC — Types C, IP-X2, IPC-AR
CONTINENTAL BUILDING PRODUCTS OPERATING CO, L L C — Type LGFC-C/A
NATIONAL GYPSUM CO — Types eXP-C, FSW-G, FSW-C, FSK-G, FSK-C
UNITED STATES GYPSUM CO — Types C, IP-X2, IPC-AR
USG BORAL DRYWALL SFZ LLC — Type C
USG MEXICO S A DE C V — Types C, IP-X2, IPC-AR

7A. **Gypsum Board* - (Not Shown) —** For use with Items 3A or 3B and 6A. Nom 5/8 in. thick, 48 in. wide gypsum panels installed with long dimension perpendicular to resilient channels. Gypsum panels secured with 1 in. long Type S bugle head steel screws spaced 8 in. OC and located a min of 1/2 in. from side joints and 3 in. from the end joints. Finish Rating with this ceiling system is 20 min.
UNITED STATES GYPSUM CO — Type ULIX.

8. **Finishing System —** (Not Shown) — Vinyl, dry or premixed joint compound, applied in two coats to joints and screw-heads; paper tape, 2 in. wide, embedded in first layer of compound over all joints. As an alternate, nom 3/32 in. thick veneer plaster may be applied to the entire surface of gypsum wallboard.
9. **Grille —** Aluminum or Steel grille, installed in accordance with the installation instructions provided with the ceiling damper.

*** Indicates such products shall bear the UL or cUL Certification Mark for jurisdictions employing the UL or cUL Certification (such as Canada), respectively.**

C3 — UL P544
NTS

Last Updated on 2017-08-16

ROOF-CEILING SYSTEMS

GA FILE NO. RC 2751	GENERIC	2 HOUR FIRE

WOOD ROOF TRUSSES, GYPSUM WALLBOARD, RIGID FURRING CHANNELS

Base layer 5/8" type X gypsum wallboard applied at right angles to wood roof trusses 24" o.c. with 1 1/4" Type W drywall screws 12" o.c. **Second** layer 5/8" type X gypsum wallboard applied at right angles to trusses with 2" Type W drywall screws 12" o.c. Second layer joints offset 24" from base layer joints. **Third** layer 5/8" type X gypsum wallboard applied at right angles to trusses with 2 1/2" Type W drywall screws 12" o.c. Third layer joints offset 12" from second layer joints. Hat-shaped rigid furring channels 24" o.c. applied at right angles to trusses over third layer with two 2 1/2" long Type W drywall screws at each truss. **Face** layer 5/8" type X gypsum wallboard applied at right angles to furring channels with 1 1/8" Type S drywall screws 12" o.c. Wood trusses supporting 3/4" T & G edge wood structural panels applied at right angles to trusses with 8d nails 6" o.c. at joints and 12" at intermediate I-joists. Appropriate roof covering. **Ceiling provides two-hour fire-resistance protection for wood framing.**

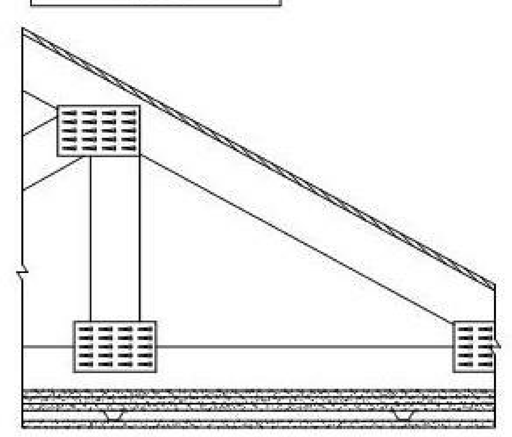

Approx. Ceiling
Weight: 12 psf
Fire Test: UL R4024, 00NK26545, 4-27-01, UL Design L556

F1 — RC 2751
12" = 1'-0"

ISSUE HISTORY

No.	Date	Description
1	04/15/2022	PERMIT SUBMITTAL

REVISION HISTORY

No.	Date	Description

FUGLEBERG KOCH
2555 Temple Trail, Winter Park, FL 32789 (407) 629-0595
www. fuglebergkoch.com AA26002103

CONSULTANT

STATE OF ALABAMA — MICHAEL E. GOVE — 8234 — REGISTERED ARCHITECT — 4/15/22

MICHAEL GOVE
8234

THE ROBERT MADISON
MADISON, ALABAMA

Drawn:	MB
Checked:	JK
Approval:	MG
Date:	04/15/2022
Project #:	5722

UL REFERENCE DIRECTORY ROOF SYSTEM

A0.35

PLOTTED: 5/3/2022 3:18:34 PM

© 2018 These documents and their contents are the property of FUGLEBERG KOCH - AA26002103, and are issued only for the specific project noted on these drawings. Any reproductions, revisions, or modifications of these documents without the expressed written consent of Fugleberg Koch is prohibited by law.

System No. F-C-1005

December 04, 1992
F Rating — 2 Hr
T Rating — 1-1/2 Hr

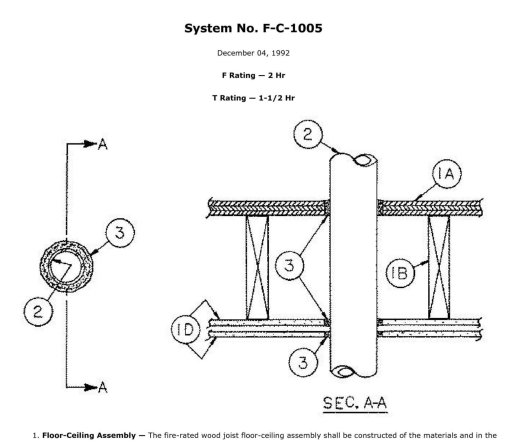

1. **Floor-Ceiling Assembly —** The fire-rated wood joist floor-ceiling assembly shall be constructed of the materials and in the manner specified in Design No. L505, L511 or L536 in the UL Fire Resistance Directory, as summarized below:
A. **Flooring System —** Lumber or plywood subfloor with finish floor of lumber, plywood or **Floor Topping Mixture*** as specified in the individual Floor-Ceiling Design.
B. **Wood Joists —** Nom 2 by 10 in. lumber joists spaced 16 in. OC with nom 1 by 3 in. lumber bridging and with ends firestopped.
C. **Furring Channels —** (Not shown) — Resilient galv steel furring channels installed perpendicular to wood joists between first and second layers of wallboard (Item 1D) and spaced max 24 in. OC.
D. **Gypsum Board* —** Nom 4 ft wide by 5/8 in. thick as specified in the individual Floor-Ceiling Design. First layer of wallboard nailed to wood joists. Second layer of wallboard screw-attached to furring channels. Max diam of ceiling opening is 3/8 in. greater than the outside diam of pipe.
2. **Through Penetrants —** One metallic pipe, conduit or tubing to be centered within the firestop system. Pipe, conduit or tubing to be rigidly supported on both sides of floor and ceiling. The following types and sizes of metallic pipes, conduits or tubing may be used:
A. **Steel Pipe —** Nom 3 in. diam (or smaller) Schedule 5 (or heavier) steel pipe.
B. **Conduit —** Nom 3 in. diam (or smaller) electrical metallic tubing or steel conduit.
C. **Copper Tubing —** Nom 1-1/2 in. diam (or smaller) Type L (or heavier) copper tubing.
3. **Fill, Void or Cavity Material* — Sealant —** Fill material forced into annular spaces to fill space to max extent possible. Sealant shall be installed flush with floor and ceiling.
PRC-DESOTO INTERNATIONAL INC — Type PR-805 Sealant
*** Indicates such products shall bear the UL or cUL Certification Mark for jurisdictions employing the UL or cUL Certification (such as Canada), respectively.**

D1 — F-C-1005
12" = 1'-0"

System No. F-C-2037

November 26, 1997
F Rating — 1 Hr
T Rating — 1 Hr

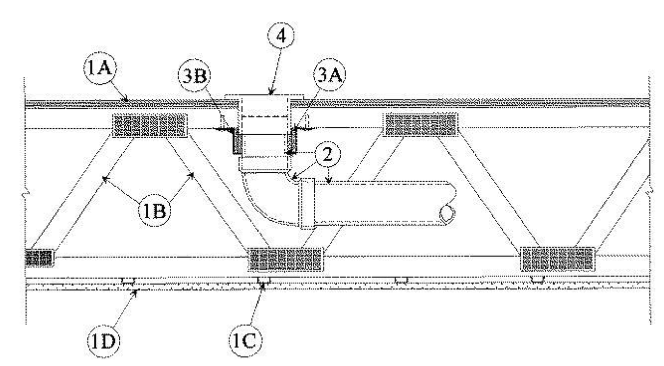

1. **Floor-Ceiling Assembly —** The fire-rated solid or trussed lumber joist floor-ceiling assembly shall be constructed of the materials and in the manner specified in individual L500 Series Floor-Ceiling Designs in the UL Fire Resistance Directory. The general construction details of the floor-ceiling assembly are summarized below:
A. **Flooring System —** Lumber or plywood subfloor with finish floor of lumber, plywood or **Floor Topping Mixture*** as specified in the individual Floor-Ceiling Design. Max diam of opening is 5 in.
B. **Wood Joists —** Nom 2 by 10 in. lumber joists spaced 16 in. OC with nom 1 by 3 in. lumber bridging and with ends firestopped. As an alternate to lumber joists, nom 10 in. deep (or deeper) lumber, steel or combination lumber and steel joists, trusses or **Structural Wood Members*** with bridging as required with ends firestopped.
C. **Furring Channels —** Resilient galv steel furring installed perpendicular to wood joists (Item 1B) between wallboard (Item 1D) and wood joists as required in the individual Floor-Ceiling Design.
D. **Gypsum Board* —** Nom 4 ft wide by 5/8 in. thick as specified in the individual Floor-Ceiling Design. Wallboard secured to wood joists as specified in the individual Floor-Ceiling Design.
2. **Drain Piping —** Nom 4 in. diam (or smaller) Schedule 40 polyvinyl chloride (PVC) or acrylonitrile butadiene styrene (ABS) drain piping and fittings. Diam of circular opening hole through flooring (Item 1A) to be max 1/2 in. larger than outside diam of pipe. Short length of pipe with 90 degree elbow fitting cemented into bottom socket of closet flange (Item 5). Drain piping cemented to elbow.
3. **Firestop System —** The firestop system shall consist of the following:
A. **Fill, Void or Cavity Materials* — Wrap Strip —** Nom 1/4 in. thick intumescent material faced on both sides with a plastic film, supplied in 1-1/2 in. wide strips. Nom 1-1/2 in. wode strips tightly-wrapped around nonmetallic pipe with the edges butted against the underside of flooring and around the entire perimeter of the hole-sawed opening. Two layers of wrap strip are required. Each layer of wrap strip to be installed with butted seam, butted seams in successive layers staggered or aligned. Wrap strip layer(s) temporarily held in position using aluminum foil tape.
SPECIFIED TECHNOLOGIES INC — SpecSeal RED Strip
B. **Steel Collar —** Collar fabricated from coils of precut 0.016 in. thick (30 MSG) galv sheet steel available from wrap strip manufacturer. Collar shall be nom 1-1/2 in. deep with min four 1 in. wide by 2 in. long anchor tabs for securement to top surface of flooring. Retainer tabs, 3/4 in. wide tapering down to 1/4 in. wide and located opposite the anchor tabs, are folded 90 degrees toward through-penetrant surface to maintain the annular space around the through-penetrant and to retain the wrap strips. Steel collar wrapped around wrap strips and through-penetrant with a 1 in. wide overlap along its perimeter joint and secured together by means of a min 1/2 in. wide by 0.028 in. thick stainless steel hose clamp at mid-height of the steel collar. As an alternate to the steel hose clamp, the steel collar can be secured together by means of three No. 8 by 3/8 in. long steel sheet metal screws. Anchor tabs of collar bent outwards and secured to top surface of flooring or underside of floor using min 3/4 in. long steel wood screws in conjunction with 1/4 in., by 1-1/4 in. diam steel fender washers.
4. **Closet Flange —** PVC or ABS closet stub sized to accommodate drain pipe. Closet flange installed in hole-sawed opening in flooring system with flange secured to top of flooring with steel screws.
5. **Water Closet —** (Not Shown) — Floor mounted vitreous china water closet.
*** Indicates such products shall bear the UL or cUL Certification Mark for jurisdictions employing the UL or cUL Certification (such as Canada), respectively.**

H1 — F-C-2037
12" = 1'-0"

System No. F-C-2007

January 20, 2015
F Rating — 1 Hr
FT Rating — 3/4 and 1 Hr (See Item 2)
FH Rating — 1 Hr
FTH Rating — 3/4 and 1 Hr (See Item 2)

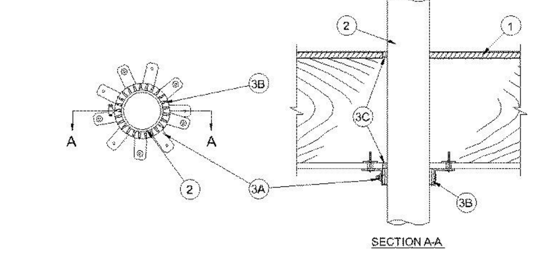

System tested with a pressure differential of 50 Pa between the exposed and the unexposed surfaces with the higher pressure on the exposed side.
1. **Floor-Ceiling Assembly —** The 1 hr fire-rated solid or trussed lumber joist floor-ceiling assembly shall be constructed of the materials and in the manner specified in the individual L500 Series Floor-Ceiling Designs in the UL Fire Resistance Directory. The general construction features of the floor-ceiling assembly are summarized below:
A. **Flooring System —** Lumber or plywood subfloor with finish floor of lumber, plywood or **Floor Topping Mixture*** as specified in the individual Floor-Ceiling Design. Max diam of opening shall be 127 mm (5 in.).
B. **Wood Joists* —** Nom 254 mm (10 in.) deep (or deeper) lumber, steel or combination lumber and steel joists, trusses or **Structural Wood Members*** with bridging as required and with ends firestopped.
C. **Gypsum Board* —** Nom 16 mm (5/8 in.) thick, 1.2 m (4 ft) wide as specified in the individual Floor-Ceiling Design. Max diam of opening shall be 127 mm (5 in.).

2. **Through Penetrants —** One nonmetallic pipe to be installed concentrically or eccentrically within the firestop system. Annular space between pipe and edge of opening to be as specified in the table below. Pipe to be rigidly supported on both sides of floor-ceiling assembly. The following types and sizes of nonmetallic pipes may be used:
A. **Polyvinyl Chloride (PVC) Pipe —** Nom 102 mm (4 in.) diam (or smaller) Schedule 40 solid or cellular core PVC pipe for use in closed (process or supply) or vented (drain, waste or vent) piping systems.
B. **Chlorinated Polyvinyl Chloride (CPVC) Pipe —** Nom 102 mm (4 in.) diam (or smaller) SDR11 or SDR13.5 CPVC pipe for use in closed (process or supply) piping systems.
C. **Chlorinated Polyvinyl Chloride (CPVC) Pipe —** Nom 102 mm (4 in.) diam (or smaller) SDR 11 CPVC for use in closed (process or supply) piping systems.
IPEX INC — AquaRise

Nom Diam of Pipe, mm (in.)	Min/Max Annular Space, mm (in.)	T Rating - Hr
51 (2) (or smaller)	0-6 (0-1/4)	1
102 (4) (or smaller)	0-13 (0-1/2)	3/4

3. **Firestop System —** The firestop system shall consist of the following:
A. **Fill, Void or Cavity Material* —** Wrap Strip - Layers of intumescent wrap strip are continuously wrapped around the pipe with ends held in place with tape. Wrap strip butted tightly against bottom surface of floor or both surfaces of wall. Size of wrap strip and number of layers for a given size penetrant are shown in table below.
HILTI CONSTRUCTION CHEMICALS, DIV OF HILTI INC — CP648-E W25/1" or CP648-E W45/1-3/4" Firestop Wrap Strip

Product Designation	Max Pipe Size mm (in.)	Number of Layers	Nom Wrap StripWidth mm (in.)
CP648-E W25/1"	76 (3)	2	25 (1)
CP648-E W45/1-3/4"	76 (3)	1	44 (1-3/4)
CP648-E W25/1"	102 (4)	3	25 (1)
CP648-E W45/1-3/4"	102 (4)	2	44 (1-3/4)

B. **Steel Collar —** Steel collar fabricated from coils of precut min 0.4 mm (0.016 in.) thick (No. 28 gauge) galv steel available from fill material manufacturer. Collar shall be nom 25 mm (1 in.) (for 1 in. wide wrap strip) or 44 mm (1-3/4 in.) (for 1-3/4 in. wide wrap strip) deep with 25 mm (1 in.) wide by 51 mm (2 in.) long anchor tabs on 44 mm (1-3/4 in.) centers for securement to the underside of floor or both surfaces of wall. The opposite side incorporates retainer tabs, 12 mm (1/2 in.) wide by 5 mm (3/16 in.) long, prebent toward the pipe surface. Collar shall be tightly wrapped over the wrap strip, overlapping min. 1 in at seam. A nom 12 mm (1/2 in.) wide stainless steel hose clamp shall be secured to the collar at its mid-height. Every other anchor tab of collar secured to gypsum ceiling at every other tab with 6 mm (1/4 in.) diam by 38 mm (1-1/2 in.) long steel toggle bolts in conjunction with 6 mm (¼ in.) by 19 mm (¾ in.) diameter steel washers.
C. **Fill, Void or Cavity Materials*-Sealant —** Min 16 mm (5/8 in.) thickness of fill material applied within the annulus, flush with the bottom surface of the gypsum board ceiling. Min 16 mm (5/8 in.) thickness of fill material applied within the annulus, flush with the top surface of the floor.
HILTI CONSTRUCTION CHEMICALS, DIV OF HILTI INC — FS-ONE Sealant or FS-ONE MAX Intumescent Sealant.

*** Indicates such products shall bear the UL or cUL Certification Mark for jurisdictions employing the UL or cUL Certification (such as Canada), respectively.**

E1 — F-C-2007
12" = 1'-0"

System No. F-C-2008

May 20, 2005
F Rating — 1 Hr
T Rating — 1 Hr
L Rating At Ambient — 7 CFM/sq ft (See Item 3B)
L Rating At 400 F — Less Than 1 CFM/sq ft (See Item 3B)

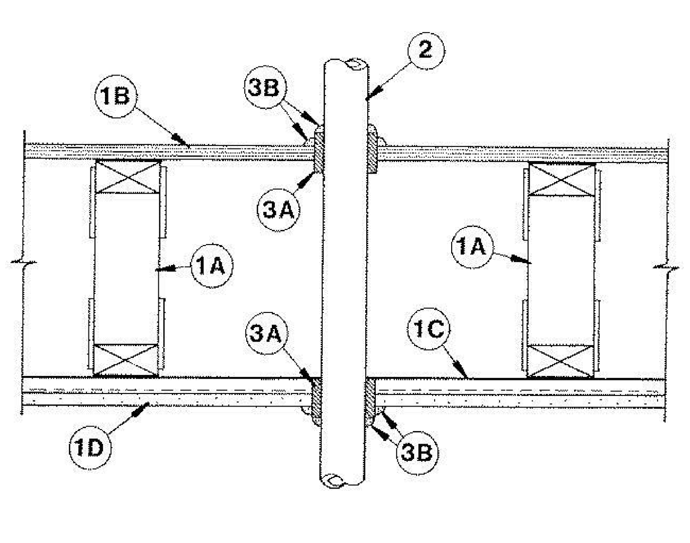

1. **Floor Assembly —** The fire rated wood truss or combination wood and steel truss Floor-Ceiling assembly shall be constructed of the materials and in the manner described in the individual L500 Series Design in the UL Fire Resistance Directory and shall include the following construction features:
A. **Trusses —** Min 12 in. (305 mm) deep parallel chord trusses fabricated from 2 by 4 in. (51 by 102 mm) lumber in conjunction with galv steel truss plates or **Structural Wood Members*** with bridging as required.
B. **Flooring —** Nom 3/4 in. (19 mm) thick plywood flooring with or without **Floor Topping Mixture***. Diam of hole-sawed opening in flooring to be 1/2 to 3/4 in. (13 to 19 mm) larger than diam of pipe. Max diam of opening in flooring is 3 in. (76 mm).
C. **Furring Channels —** Rigid or resilient galv steel furring channels installed perpendicular to bottom chord of trusses.
D. **Gypsum Board* —** Nom 4 ft (1.22 m) wide by 5/8 in. (16 mm) thick, screw-attached to furring channels. Diam of hole-sawed opening in gypsum wallboard ceiling to be 1/2 to 3/4 in. (13 to 19 mm) larger than diam of pipe. Max diam of opening in ceiling is 3 in. (76 mm)
2. **Nonmetallic Pipe —** Nom 2 in. (51 mm) diam (or smaller) Schedule 40 polyvinyl chloride (PVC), SDR 13.5 chlorinated polyvinyl chloride (CPVC) or solid-core Schedule 40 acrylonitrile-butadiene-styrene (ABS) pipe for use in closed (process or supply) or vented (drain, waste or vent) piping systems. One pipe to be installed approx midway between trusses and centered in circular openings in flooring and in ceiling. A nom 1/4 in. to 3/8 in. (6 to 10 mm) annular space is required in the firestop system. Pipe to be rigidly supported on both sides of Floor-Ceiling assembly.
2A. **Electrical Nonmetallic Tubing+ —** Nom 1 in. (25 mm) diam (or smaller) corrugated wall ENT constructed of polyvinyl chloride. ENT to be installed as a complete system with all terminations in junction boxes, outlet boxes or other approved enclosures as specified in the National Electrical Code. Max one ENT per through opening. ENT to be centered in opening and rigidly supported on both sides of the Floor-Ceiling assembly.
See **Electrical Nonmetallic Tubing** (FKHU) category in Electrical Construction Materials Directory for names of manufacturers.
3. **Firestop System —** The details of the firestop system shall be as follows:

A. **Fill, Void or Cavity Materials* — Wrap Strip —** Nom 1/4 in. (6 mm) thick intumescent elastomeric material faced on one side with aluminum foil, supplied to 2 in. (51 mm) wide strips. Nom 2 in. (51 mm) wide strip tightly-wrapped around nonmetallic pipe (foil side exposed), secured with two steel tie wires and slid into hole-sawed opening in flooring (Item 1B) and in gypsum wallboard ceiling (Item 1D). Bottom edge of wrap strip to project 9/16 to 11/16 in. (14 to 17.5 mm) below bottom surface of flooring and below bottom (ceiling) surface of gypsum board.
3M COMPANY — Type FS-195+

B. **Fill, Void or Cavity Materials* — Caulk, Sealant or Putty —** Nom 1/4 in. (6 mm) thickness of caulk or putty to be applied to the exposed edge of the wrap strip layer (top of flooring and bottom of gypsum board ceiling). Generous application of caulk or putty to be applied to fill all gaps at the wrap strip/flooring and wrap strip/gypsum board ceiling interfaces.

3M COMPANY — CP 25WB+ Caulk, FB-3000 WT Sealant, MP+ Stix Putty (Note: L Ratings apply only when Type CP 25WB+ caulk or FB-3000 WT sealant is used. CP 25WB+ not suitable for use with CPVC pipes.)

*** Indicates such products shall bear the UL or cUL Certification Mark for jurisdictions employing the UL or cUL Certification (such as Canada), respectively.**

E5 — F-C-2008
12" = 1'-0"

System No. F-C-1006

April 03, 2007
F Rating — 1 Hr
T Ratings — 0 and 1 Hr (See Item 2)
L Rating At Ambient — Less Than 1 CFM/sq ft
L Rating At 400 F — Less Than 1 CFM/sq ft

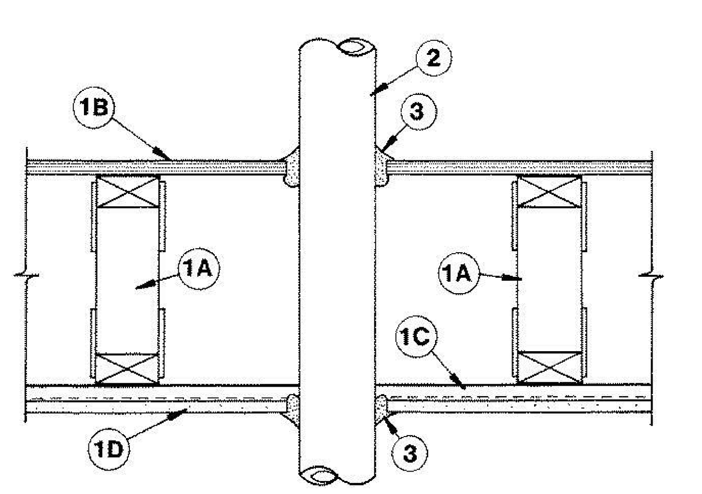

1. **Floor-Ceiling Assembly —** The 1 hr fire rated wood joist, wood truss or combination wood and steel truss Floor-Ceiling assembly shall be constructed of the materials and in the manner described in the individual L500-Series Design in the UL Fire Resistance Directory, as summarized below:
A. **Joists or Trusses —** Nom 2 by 10 in. (51 by 254 mm) lumber joists, min 12 in. (305 mm) deep parallel chord trusses fabricated from nom 2 by 4 in. (51 by 102 mm) lumber in conjunction with galv steel truss plates or **Structural Wood Members*** with bridging as required.
B. **Flooring —** Nom 3/4 in. (19 mm) thick plywood flooring with or without **Floor Topping Mixture***. Diam of circular cutouts is 1/4 to 1/2 in. (6 to 13 mm) larger than outside diam of the pipe.
C. **Furring Channels —** Rigid or resilient galv steel furring channels installed perpendicular to bottom chord of trusses.
D. **Gypsum Board* —** Nom 4 ft (1.2 m) wide by 5/8 in. (16 mm) thick, screw-attached to furring channels. Diam of circular cutouts is 1/4 to 1/2 in. (6 to 13 mm) larger than outside diam of the pipe.
1.1 **Chase Wall —** (Optional, now shown) — The through penetrants (Item No. 2) may be routed through a 1 hr fire-rated single, double or staggered wood stud/gypsum wallboard chase wall constructed of the materials and in the manner specified in the individual U300 Series Wall and Partition Designs in the UL Fire Resistance Directory and shall include the following construction features:
A. **Studs —** Nom 2 by 6 in. (51 by 152 mm) or double nom 2 by 4 in. (51 by 102 mm) lumber studs.
B. **Sole Plate —** Nom 2 by 6 in. (51 by 152 mm) or parallel 2 by 4 in. (51 by 102 mm) lumber plates, tightly butted. Diam of circular cutouts is 1/4 to 1/2 in. (6 to 13 mm) larger than outside diam of the pipe.
C. **Top Plate —** The double top plate shall consist of two nom 2 by 6 in. (51 by 152 mm) or two sets of parallel 2 by 4 in. (51 by 102 mm) lumber plates, tightly butted. Diam of circular cutouts is 1/4 to 1/2 in. (6 to 13 mm) larger than outside diam of the pipe.
D. **Gypsum Board* —** Thickness, type, number of layers and fasteners shall be as specified in individual Wall and Partition Design.
2. **Through-Penetrant —** Nom 10 in. (254 mm) diam (or smaller) Schedule 10 (or heavier) steel pipe or cast iron pipe, nom 4 in. (102 mm) diam (or smaller) steel conduit or steel EMT or nom 3 in. (76 mm) diam (or smaller) Type L (or heavier) copper tubing. Pipe to be installed approx midway between joists or trusses and centered in circular cutouts. Annular space between penetrant and periphery of opening shall be min 1/8 in. (3 mm) to max 1/4 in. (6 mm). Pipe to be rigidly supported on both sides of Floor-Ceiling assembly.
T Rating is 1 hr for nom 4 in. (102 mm) diam (or smaller) penetrants. T Rating is 0 hr for all penetrants greater than nom 4 in. (102 mm) diam.

3. **Fill, Void or Cavity Materials* — Caulk or Sealant —** Min 3/4 in. (19 mm) thickness of fill material applied within the annulus, flush with top surface of floor or sole plate. Min 5/8 in. (16 mm) thickness of fill material applied within the annulus, flush with bottom surface of ceiling or top plate. An additional min 1/4 in. (6 mm) crown of fill material applied to perimeter of penetrant at its egress from the top of flooring and underside of ceiling or from top of sole plate and underside of top plate.
3M COMPANY — CP 25 WB+ or FB-3000 WT

*** Indicates such products shall bear the UL or cUL Certification Mark for jurisdictions employing the UL or cUL Certification (such as Canada), respectively.**

E7 — F-C-1006
12" = 1'-0"

System No. F-C-3007

August 18, 2011
F Rating — 1 Hr
T Rating — 1 Hr

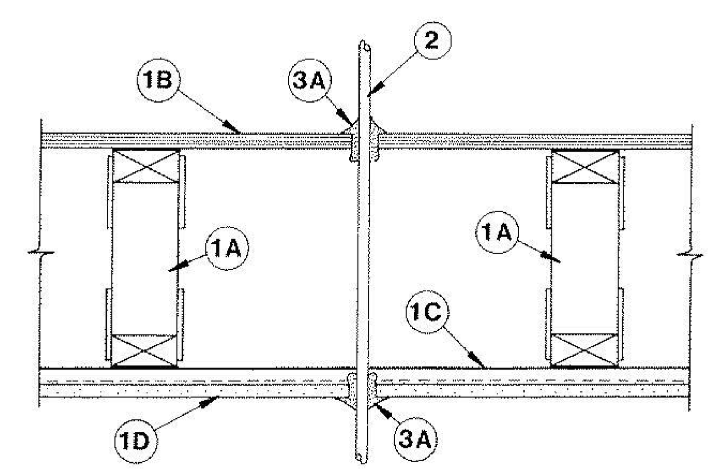

1. **Floor Assembly —** The 1 hr fire rated wood truss or combination wood and steel truss Floor-Ceiling assembly shall be constructed of the materials and in the manner described in the individual L500 Series Design in the UL Fire Resistance Directory, as summarized below:
A. **Trusses —** Min 12 in. (305 mm) deep parallel chord trusses fabricated from nom 2 by 4 in. (51 by 102 mm) lumber in conjunction with galv steel truss plates or **Structural Wood Members*** with bridging as required.
B. **Flooring —** Nom 3/4 in. (19 mm) thick plywood flooring with or without **Floor Topping Mixture*** . Max diam of opening is 1-1/4 in. (32 mm).
C. **Furring Channels —** Rigid or resilient galv steel furring channels installed perpendicular to bottom chord of trusses.
D. **Gypsum Board* —** Nom 4 ft (1.22 m) wide by 5/8 in. (16 mm) thick, screw-attached to furring channels. Max diam of opening is 1-1/4 in. (32 mm).
1.1 **Chase Wall —** (Optional, Not Shown) — The through penetrants (Item No. 2) may be routed through a 1 hr fire-rated single, double or staggered wood stud/gypsum board chase wall constructed of the materials and in the manner specified in the individual U300 Series Wall and Partition Designs in the UL Fire Resistance Directory and shall include the following construction features:
A. **Studs —** Nom 2 by 6 in. (51 by 152 mm) or double nom 2 by 4 in. (51 by 102 mm) lumber studs.
B. **Sole Plate —** Nom 2 by 6 in. (51 by 152 mm) or parallel 2 by 4 in. (51 by 102 mm) lumber plates, tightly butted.
C. **Top Plate —** The double top plate shall consist of two nom 2 by 6 in. (51 by 152 mm) or two sets of parallel 2 by 4 in. (51 by 102 mm) lumber plates, tightly butted. Max diam of opening is 1-1/2 in. (38 mm)
D. **Gypsum Board* —** Thickness, type, number of layers and fasteners shall be as specified in individual Wall and Partition Design.
2. **Cables —** One cable to be installed eccentrically or concentrically in opening with annular space between the cable and the periphery of the opening of min 0 in. (0 mm, point contact) to max 1-1/4 in. (32 mm). Cable to be rigidly supported on both sides of Floor-Ceiling assembly. The following types of cables may be used.
A. Max seven conductor No. 12 AWG (or smaller) power/control cables with polyvinyl chloride insulation and jacket materials.
B. Max 100 pair No. 22 AWG (or smaller) telecommunication cables with polyvinyl chloride insulation and jacket materials.
C. Max four conductor with ground No. 2/0 AWG (or smaller) aluminum SER cables with polyvinyl chloride insulation and jacket materials.
2A. **Through Penetrating Product* —** Max one through-penetrating product to be installed eccentrically or concentrically in opening with annular space between the through-penetrating product and the periphery of the opening of min 0 in. (0 mm, point contact) to max 1-1/4 in. (32 mm). Through-penetrating product to be rigidly supported on both sides of floor or wall assembly. The following types of through-penetrating products may be used:
A. Max four copper conductors No. 2/0 AWG (or smaller) aluminum or steel **Armored Cable#** or **Metal-Clad Cable+**.
AFC CABLE SYSTEMS INC
B. Two or more twisted copper conductor No. 6 AWG (or smaller) **Power Limited Circuit Cable+** with or without a jacket under a metal armor.
AFC CABLE SYSTEMS INC
C. Two or more twisted copper conductor No. 10 AWG (or smaller) **Power Limited Fire Alarm Cable+** with or without a jacket under a metal armor.
AFC CABLE SYSTEMS INC
D. Two or more twisted copper conductor No. 12 AWG (or smaller) **Non Power Limited Fire Alarm Cable+** with or without a jacket under a metal armor.
AFC CABLE SYSTEMS INC
3. **Fill, Void or Cavity Materials* — Caulk, Sealant or Putty —** Min 3/4 in. (19 mm) thickness of fill material applied within the annulus, flush with top surface of floor or sole plate. Min 5/8 in. (16 mm) thickness of fill material applied within the annulus, flush with bottom surface of ceiling or top plate. An additional min 1/4 in. (6 mm) crown of fill material applied to perimeter of penetrant at its egress from the top of flooring and underside of ceiling or from top of sole plate and underside of top plate.
3M COMPANY — CP 25WB+ caulk, MP+ Stix putty or FB-3000 WT sealant

*** Indicates such products shall bear the UL or cUL Certification Mark for jurisdictions employing the UL or cUL Certification (such as Canada), respectively.**
+Bearing the UL Listing Mark

F9 — F-C-3007
12" = 1'-0"

ISSUE HISTORY

No.	Date	Description
1	04/15/2022	PERMIT SUBMITTAL

REVISION HISTORY

No.	Date	Description

FUGLEBERG KOCH
2555 Temple Trail, Winter Park, FL 32789 (407) 629-0595
www. fuglebergkoch.com AA26002103

CONSULTANT

MICHAEL GOVE
8234

THE ROBERT MADISON — MADISON, ALABAMA	
Drawn:	MB
Checked:	JK
Approval:	MG
Date:	04/15/2022
Project #:	5722

UL REFERENCE DIRECTORY FLOOR PENETRATIONS

A0.36

PLOTTED: 5/3/2022 3:18:36 PM

© 2018 These documents and their contents are the property of FUGLEBERG KOCH - AA26002103, and are issued only for the specific project noted on these drawings. Any reproductions, revisions, or modifications of these documents without the expressed written consent of Fugleberg Koch is prohibited by law.

System No. F-C-2036

December 08, 2008
F Rating — 1 Hr
T Rating — 1 Hr

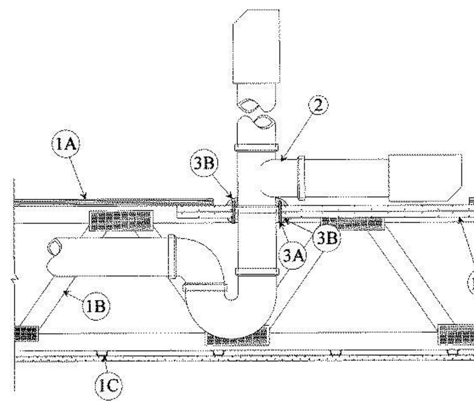

1. **Floor-Ceiling Assembly —** The fire-rated solid or trussed lumber joist floor-ceiling assembly shall be constructed of the materials and in the manner specified in individual L500 Series Floor-Ceiling Designs in the UL Fire Resistance Directory. The general construction details of the floor-ceiling assembly are summarized below:
A. **Flooring System —** Lumber or plywood subfloor with finish floor of lumber, plywood or **Floor Topping Mixture*** as specified in the individual Floor Ceiling Design. Rectangular cutout in flooring to accommodate the bathtub drain piping (Item 2) to be max 8 by 12 in.
B. **Wood Joists —** Nom 2 by 10 in. lumber joists spaced 16 in. OC with nom 1 by 3 in. lumber bridging and with ends firestopped. As an alternate to lumber joists, nom 10 in. deep (or deeper) lumber, steel or combination lumber and steel joists, trusses or **Structural Wood Members*** with bridging as required with ends firestopped.
C. **Furring Channels —** Resilient galv steel furring installed perpendicular to wood joists (Item 1B) between wallboard (Item 1D) and wood joists as required in the individual Floor-Ceiling Design.
D. **Gypsum Board* —** Nom 4 ft wide by 5/8 in. thick as specified in the individual Floor-Ceiling Design. Wallboard secured to wood joists as specified in the individual Floor-Ceiling Design. Two pieces of gypsum wallboard, each min 4 in. longer and wider than the cutout in the flooring, screw-attached to bottom of flooring concentric with cutout. Diam of opening hole-sawed through both layers of the gypsum wallboard patch to be 1/2 to 5/8 in. larger than outside diam of bathtub drain piping (Item 2).
2. **Drain Piping —** Nom 1-1/2 in. diam Schedule 40 polyvinyl chloride (PVC) or acrylonitrile butadiene styrene (ABS) pipes and drain fittings cemented together and provided with PVC or ABS bathtub waste/overflow fittings, respectively.
3. **Firestop System —** The firestop system shall consist of the following:
A. **Fill, Void or Cavity Materials* — Wrap Strip —** Nom 1/4 in. thick intumescent material faced on both sides with a plastic film, supplied in 1-1/2 in. Nom 1-1/2 in. wide strips tightly-wrapped around drain piping secured together with 1-1/2 in. wide aluminum foil tape and slid into hole-sawed opening in gypsum wallboard patch (Item 1D). Top edge of wrap strip to extend a nom 1/2 in. below above top surface of gypsum wallboard patch.
SPECIFIED TECHNOLOGIES INC — SpecSeal RED Strip
B. **Fill, Void or Cavity Materials* — Sealant —** Nom 1/4 in. thickness of fill material to be applied to perimeter of wrap strip at its egress from the underside of the gypsum wallboard patch. Nom 1/4 in. thickness of fill material to be applied to the exposed edge of the wrap strip layer and to fill all gaps between the wrap strip layer and the tee of the drain fitting on the top surface of the gypsum wallboard patch.
SPECIFIED TECHNOLOGIES INC — SpecSeal Series SSS Sealant or SpecSeal LCI Sealant

*Bearing the UL Classification Mark

Last Updated on 2008-12-08

D1 — UL F-C-2036
NTS

System No. F-C-5002

May 19, 2005
F Rating — 1 Hr
T Rating — 1 Hr
L Rating At Ambient — 7 CFM/sq ft
L Rating At 400 F — Less Than 1 CFM/sq ft

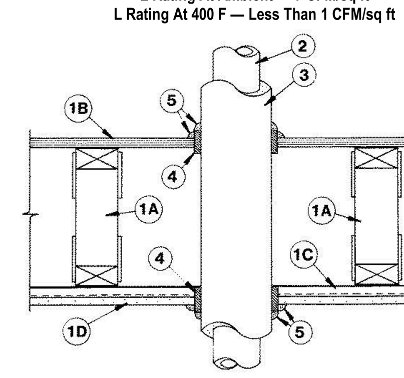

1. **Floor Assembly —** The fire rated wood truss or combination wood and steel truss Floor-Ceiling assembly shall be constructed of the materials and in the manner described in the individual L500-Series Designs in the UL Fire Resistance Directory and shall include the following construction features:
A. **Trusses —** Min 12 in. (305 mm) deep parallel chord trusses fabricated from nom 2 by 4 in. (51 by 102 mm) lumber in conjunction with galv steel truss plates or **Structural Wood Members*** with bridging as required.
B. **Flooring —** Nom 3/4 in. (19 mm) thick plywood flooring with or without **Floor Topping Mixture***. Max diam of hole-sawed opening in flooring is 7 in. (178 mm).
C. **Furring Channels —** Rigid or resilient galv steel furring channels installed perpendicular to bottom chord of trusses.
D. **Gypsum Board* —** Nom 4 ft (122 cm) wide by 5/8 in. (16 mm) thick, screw-attached to furring channels. Max diam of hole-sawed opening in gypsum board ceiling is 7 in. (178 mm).
2. **Pipe —** Nom 4 in. (102 mm) diam (or smaller) Schedule 10 (or heavier) steel pipe or nom 3 in. (76 mm) diam (or smaller) Type L (or heavier) copper pipe. Pipe to be installed approximately midway between trusses and centered in circular cutouts in flooring (Item 1B) and gypsum board ceiling (Item 1D). Diam of circular cutouts in flooring and gypsum wallboard ceiling to be 1/2 to 3/4 in. (13 to 19 mm) larger than outside diam of pipe covering (Item 3) or tube insulation (Item 3A) on pipe. Pipe to be rigidly supported on both sides of Floor-Ceiling assembly.
3. **Pipe Covering* —** Nom 1 in. (25 mm) thick hollow cylindrical heavy density (min 3.5 pcf or 56 kg/m3) glass fiber units jacketed on the outside with an all service jacket. Longitudinal joints sealed with metal fasteners or factory-applied self-sealing lap tape. Transverse joints secured with metal fasteners or with butt strip tape supplied with the product.
See **Pipe and Equipment Covering — Materials*** (BRGU) category in Building Materials Directory for names of manufacturers. Any pipe covering material meeting the above specifications and bearing the UL Classification Marking with a Flame Spread Index of 25 or less and a Smoke Developed Index of 50 or less may be used.
3A. **Tube Insulation — Plastics+ —** As an alternate to the glass fiber pipe covering (Item 3), nom 1/2 or 5/8 in. (13 or 16 mm) thick acrylonitrile butadiene/polyvinyl chloride (AB/PVC) flexible foam furnished in the form of tubing with skin may be used.
See **Plastics (QMFZ2)** category in the Recognized Component Directory for names of manufacturers. Any Recognized Component tube insulation material meeting the above specifications and having a UL 94 Flammability Classification of 94-5VA may be used.
4. **Fill, Void or Cavity Materials* — Wrap Strip —** Nom 1/4 in. (6 mm) thick intumescent elastomeric material faced on one side with aluminum foil, supplied in 2 in. (51 mm) wide strips. Nom 2 in. (51 mm) wide strip tightly wrapped around pipe covering or tube insulation (foil side exposed), secured with two steel tie wires and slid into hole-sawed opening in flooring (Item 1B) and in gypsum wallboard ceiling (Item 1D). Bottom edge of wrap strip to project 9/16 to 11/16 in. (14 to 18 mm) below bottom surface of flooring and below bottom (ceiling) surface of gypsum wallboard.

3M COMPANY — Types FS-195, FS-195+
5. **Fill, Void or Cavity Materials* — Caulk or Sealant —** Nom 1/4 in. (6 mm) thickness of caulk to be applied to the exposed edge of the wrap strip layer (top of flooring and bottom of gypsum board ceiling). Generous application of caulk to be applied to fill all gaps at the wrap strip/flooring and wrap strip/gypsum board ceiling interfaces.
3M COMPANY — CP 25WB+, IC 15WB+, FireDam 150+ caulk or FB-3000 WT sealant
*** Indicates such products shall bear the UL or cUL Certification Mark for jurisdictions employing the UL or cUL Certification (such as Canada), respectively.**

H1 — F-C-5002
12" = 1'-0"

System No. W-L-8011

December 10, 2008
F Ratings — 1 & 2 Hr. (See Item 1B)
T Rating — 1/2 Hr.

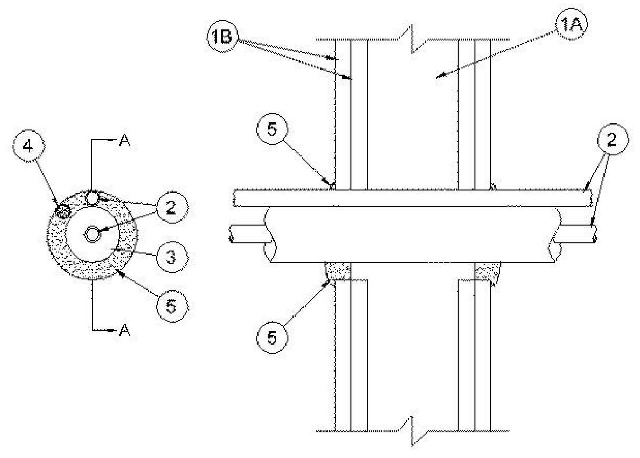

SECTION A-A

1. **Wall Assembly —** The 1 or 2 hr fire-rated gypsum board/stud wall assembly shall be constructed of the materials and in the manner described in the individual U300 or U400 Series Wall or Partition Design in the UL Fire Resistance Directory and shall include the following construction features:
A. **Studs —** Wall framing may consist of either wood studs or steel channel studs. Wood studs to consist of nom 2 by 4 in. lumber spaced 16 in. O.C. with nom 2 by 4 in. lumber end plates and cross braces. Steel studs to be min 3-5/8 in. wide and spaced max 24 in. O.C.
B. **Gypsum Board* —** 5/8 in. thick, 4 ft wide with square or tapered edges. The gypsum board type, thickness, number of layers, fastener type and sheet orientation shall be as specified in the individual U300 or U400 Series Design in the UL Fire Resistance Directory. Max diam of opening is 3-1/2 in.
The hourly F Rating of the firestop system is equal to the hourly fire rating of the wall assembly in which it is installed.
2. **Through Penetrant —** A max of two pipes or tubing to be installed within the opening. Of the two pipes, or tubing, only one of the pipes or tubing shall have a nom diam greater than 1/2 in. The annular space between pipes or tubing and periphery of opening shall be min 0 in. (point contact) to max 1/2 in. Pipes or tubing to be rigidly supported on both sides of wall assembly. The following types and sizes of metallic pipes or tubing may be used:
A. **Steel Pipe —** Nom 1 in. diam (or smaller) Schedule 10 (or heavier) steel pipe.
B. **Iron Pipe —** Nom 1 in. diam (or smaller) cast or ductile iron pipe.
C. **Copper Tubing —** Nom 1 in. diam (or smaller) Type L (or heavier) copper tubing.
D. **Copper Pipe —** Nom 1 in. diam (or smaller) Regular (or heavier) copper pipe.
3. **Tube Insulation — Plastics+ —** Nom 3/4 in. thick acrylonitrile butadiene/polyvinyl chloride (AB/PVC) flexible foam furnished in the form of tubing. The tube insulation may be installed on a max of one pipe or tubing. The annular space between penetrating item and periphery of opening shall be min 1/2 into max 3/4 in. The space between pipes or tubing shall be 0 in. (point contact)
See **Plastics+** (QMFZ2) category in the Recognized Component Directory for names for manufacturers. Any Recognized Component tube insulation material meeting the above specifications and having a UL 94 Flammability Classification of 94-5VA may be used.
4. **Cables —** One 4 pair No. 18 AWG (or smaller) thermostat cable with polyvinyl chloride (PVC) insulation and jacket materials. Cable to be spaced a min 0 in. (point contact) to max 1/2 in. from the other penetrants. The space between the cable and the periphery of the opening shall be a min 0 in. (point contact) to max 1/2 in. Cable to be rigidly supported on both sides of wall assembly.
5. **Fill, Void or Cavity Material* — Sealant —** Min 5/8 in.thickness of fill material applied within annulus, flush with both surfaces of wall. Additional fill material to be to be forced into intersties within groups of penetrating items to max extent possible and installed such that a min 1/4 in. thick crown is formed around the penetrating items and lapping 1/4 in. beyond the periphery of the opening.
SPECIFIED TECHNOLOGIES INC — SpecSeal Series SSS Sealant or SpecSeal LCI Sealant
+Bearing the UL Recognized Component Mark
*Bearing the UL Classification Mark

Last Updated on 2008-12-10

E3 — UL W-L-8011
NTS

System No. F-C-3014

November 11, 2002
F Rating — 1 Hr
T Rating — 1 Hr

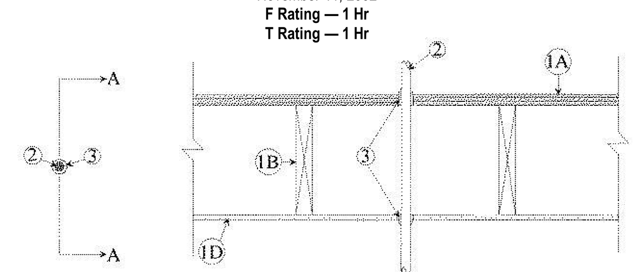

SECTION A-A

1. **Floor-Ceiling Assembly —** The fire-rated wood joist floor-ceiling assembly shall be constructed of the materials and in the manner specified in Design Nos. L512, L513 or L514 in the UL Fire Resistance Directory, and shall include the following construction features:
A. **Flooring System —** Lumber or min 1/2 in. plywood subfloor with lumber or min 3/4 in. plywood finish floor, or **Floor-Topping Mixture*** as specified in the individual Floor-Ceiling Design. Max diam of opening is 2 in.
B. **Wood Joists —** Nom 2 by 10 in. lumber joists spaced 16 in. OC with nom 1 by 3 in. lumber bridging and with ends firestopped. As an alternate to lumber joists, nom 10 in. deep (or deeper) lumber, steel or combination lumber and steel joists, trusses or **Structural Wood Members*** with bridging as required with ends firestopped.
C. **Furring Channels —** (Not Shown) — Resilient galv steel furring installed perpendicular to wood joists between Gypsum board (Item 1D) and wood joists and spaced max 24 in. OC.
D. **Gypsum Board* —** Nom 4 ft wide by 1/2 or 5/8 in. thick as specified in the individual Floor-Ceiling Design. Gypsum board attached to wood joists and furring channels as specified in the individual Floor-Ceiling Design. Max diam of opening is 2 in.
2. **Cables —** One cable to be installed approximately midway between wood joist and centered within the firestop system. Diam of openings hole-sawed through flooring system and through gypsum wallboard ceiling to be nom 1/4 in. larger than the outside diam of through penetrant. Cable to be rigidly supported on both sides of floor-ceiling assembly. The following types and sizes of copper conductor cables may be used:
A. 1/C-500 kcmil (or smaller) cable with cross-linked polyethylene insulation and jacket.
B. Max 100 pair No. 24 AWG cable (or smaller) with polyvinyl chloride (PVC) insulation and jacket.
C. Type RG/U coaxial cable with fluorinated ethylene propylene insulation and jacket.
D. Max 2/C — No. 12 AWG (or smaller) cable with (PVC) insulation and jacket.
E. Max 3/C with ground — No. 10 AWG (or smaller) Type NM nonmetallic sheathed cable.
F. Max 3/C — No. 4/0 AWG (or smaller) aluminum conductor service entrance cable with PVC insulation and jacket.
2A. **Cables (Not Shown) —** As an alternate to Item 2, a max of seven cables bundled together and centered within the firestop system. Diam of openings hole-sawed through flooring system and through gypsum board ceiling to be nom 1/4 in. larger than the outside diam of cable bundle. Cables to be rigidly supported on both sides of floor-ceiling assembly. The following types and sizes of copper conductor cables may be used:
A. Max 4 pair No. 24 AWG cable (or smaller) with polyvinyl chloride (PVC) insulation and jacket.
B. Type RG/U coaxial cable with fluorinated ethylene propylene insulation and jacket.
3. **Fill, Void or Cavity Material* — Caulk —** On top of assembly, a min 1-1/8 in. depth of fill material applied within annulus on top surface of floor. On bottom of assembly, a min 1/2 in. depth of fill material applied within annulus on bottom surface of ceiling. Fill material to be forced into interstices of cable bundle to max extent possible on both sides Additional fill material to be installed such that a min 1/2 in. thick crown is formed around the through penetrant on both sides of floor-ceiling assembly.
A/D FIRE PROTECTION SYSTEMS INC — A/D FireBarrier Silicone
*** Indicates such products shall bear the UL or cUL Certification Mark for jurisdictions employing the UL or cUL Certification (such as Canada), respectively.**

H3 — F-C-3014
12" = 1'-0"

System No. W-L-2059

November 26, 2012

F Ratings — 1 and 2 Hr (See Items 2 and 3)

T Ratings — 3/4, 1, 1-1/2 and 2 Hr (See Items 2 and 3)

L Rating At Ambient — 1 CFM/sq ft

L Rating At 400 F — Less Than 1 CFM/sq ft

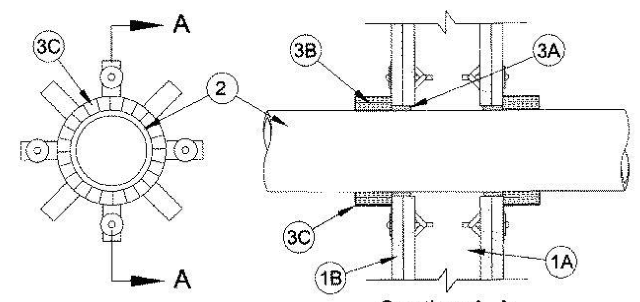

1. **Wall Assembly —** The 1 or 2 h fire rated gypsum board/stud wall assembly shall be constructed of the materials and in the manner described in the individual U300, U400 and V400 Series Wall and Partition Designs in the UL Fire Resistance Directory and shall include the following construction features:
A. **Studs —** Wall framing may consist of either wood studs or steel channel studs. Wood studs to consist of nom 2 by 4 in. (51 by 102 mm) lumber spaced 16 in. (406 mm) OC. Steel studs to be min 2-1/2 in. (64 mm) wide and spaced max 24 in. (610 mm) OC.
B. **Gypsum Board* —** 5/8 in. (16 mm) thick, 4 ft (1219 mm) wide with square or tapered edges. The gypsum board type, thickness, number of layers, fastener type and sheet orientation shall be as specified in the individual U300, U400 or V400 Series Design in the UL Fire Resistance Directory. Max diam of opening is 5 in. (127 mm).
2. **Through-Penetrants —** One nonmetallic pipe or conduit to be centered within the firestop system. The annular space shall be max 1/4 in. (6 mm). Pipe or conduit to be rigidly supported on both sides of the wall assembly. The following types and sizes of nonmetallic pipes or conduits may be used:
A. **Polyvinyl Chloride (PVC) Pipe —** Nom 4 in. (102 mm) diam (or smaller) Schedule 40 or 80 solid or cellular core PVC pipe for use in closed (process or supply) or vented (drain, waste or vent) piping systems. **When Schedule 80 PVC pipe is used, the F and T Ratings are 1 hr. When Scheduled 80 PVC pipe is used in closed (process or supply) piping systems, the F and T Ratings are equal to the assembly rating of the wall in which it is installed.**
B. **Rigid Nonmetallic Conduit+ —** Nom 4 in. (102 mm) diam (or smaller) Schedule 40 or 80 PVC conduit installed in accordance with Article 347 of the National Electrical Code (NFPA No. 70). **When Schedule 80 PVC conduit is used, the F and T Ratings are 1 hr.**
C. **Chlorinated Polyvinyl Chloride (CPVC) Pipe —** Nom 4 in. (102 mm) diam (or smaller) SDR 13.5 CPVC pipe for use in closed (process or supply) piping systems.
D. **Acrylonitrile Butadiene Styrene (ABS) Pipe —** Nom 4 in. (102 mm) diam (or smaller) Schedule 40 solid or foamed core ABS pipe for use in closed (process or supply) or vented (drain, waste or vent) piping systems.
E. **Fire Retardant Polypropylene (FRPP) Pipe —** Nom 4 in. (102 mm) diam (or smaller) Schedule 40 FRPP pipe for use in closed (process or supply) or vented (drain, waste or vent) piping systems.
F. **Polyvinylidene Fluoride (PVDF) Pipe —** Nom 4 in. (102 mm) diam (or smaller) Schedule 40 PVDF pipe for use in closed (process or supply) or vented (drain, waste or vent) piping systems.
G. **Fiberglass Reinforced Pipe (FRP) Pipe —** Nom 4 in. (102 mm) diam (or smaller) glass fiber reinforced thermosetting resin pipe for use in closed (process or control) or vented (drain, waste or vent) piping systems. When FRP pipe is used, T Rating is 3/4 hr.
H. **High Density Polyethylene (HDPE) Pipe —** Nom 4 in. (102 mm) diam (or smaller) Schedule 40 HDPE pipe for use in closed (process or supply) piping systems.
3. **Firestop System —** The firestop system shall consist of the following:
A. **Fill, Void or Cavity Material* — Sealant —** Fill material forced into annular space to max extent possible. Caulk shall be installed flush with both surfaces of wall assembly.
SPECIFIED TECHNOLOGIES INC — SpecSeal 100, 101, 102, 105, 120 or 129 Sealant, SpecSeal LCI Sealant, Pensil 300 Sealant or SpecSeal Series SIL300 Sealant
B. **Fill, Void or Cavity Material — Wrap Strip —** Nom 1/8 or 3/16 in. (3.2 or 4.8 mm) thick intumescent material faced on both sides with a plastic film, supplied in 2 in. (51 mm) wide strips or nom 1/4 in. (6 mm) thick intumescent material faced on both sides with a plastic film, supplied in 1-1/2 in. (38 mm) wide strips. The layers of wrap strips are individually wrapped around the through-penetrant with ends butted and held in place with masking tape. Butted ends in successive layers shall be aligned.
Except as noted in Item 2, the F and T Rating of the firestop system is dependent upon the fire rating of wall, diam of through penetrant and the number of wrap strips as tabulated below:

Fire Rating of Wall Hr	Max Diam of Through Penetrant In. (mm)	No. of Wrap Strip Layers	F Rating Hr	T Rating Hr
1	1-1/2 (38)	1	1	1
2	1-1/2 (38)	1	2	1-1/2
1	2 (51)	1	1	1
2	2 (51)	1	2	1-1/2
1	3 (76)	2	1	1
2	3 (76)	2	2	2
1	4 (102)	3	1	1
2	4 (102)	3	2	2

SPECIFIED TECHNOLOGIES INC — SpecSeal BLU Wrap Strip, SpecSeal BLU2 Wrap Strip or SpecSeal RED Wrap Strip
C. **Steel Collar —** Collar fabricated from coils of precut 0.016 in. (0.4 mm) thick (30 MSG) galv sheet steel available from wrap strip manufacturer. Collar shall be min 1-1/2 in. (38 mm) deep with 1 in. (25 mm) wide by 2 in. (51 mm) long anchor tabs for securement to the concrete floor or wall. Retainer tabs, 3/4 in. (19 mm) wide tapering down to 1/4 in. (6 mm) wide and located opposite the anchor tabs, are folded 90 degree toward pipe surface to maintain the annular space around the pipe and to retain the wrap strips. Steel collar wrapped around wrap strips and pipe with a 1 in. (25 mm) wide overlap along its perimeter joint and secured together by means of a min 1/2 in. (13 mm) wide by 0.028 in. (0.7 mm) thick stainless steel hose clamp installed at mid-depth of the steel collar. As an alternate to the steel hose clamp, the steel collar may be secured together by means of three No. 8 by 1/4 in. (6 mm) long steel sheet metal screws when more than one layer of wrap strip is used. Wrap strip/collar assembly is slid along the through-penetrant until abuts the surface of the wall. Collar secured to wall by 1/8 in. (3.2 mm) diam by 1-3/4 in. (44 mm) long steel molly bolts in conjunction with 1-1/4 in. (32 mm) diam steel fender washers. The number of molly bolts used is dependent upon the nom diam of the through penetrant. Two molly bolts, symmetrically located, are required for nom 1-1/2 in. (38 mm) and 2 in. (51 mm) diam through penetrants. Three molly bolts, symmetrically located, are required for nom 2-1/2 in. (64 mm) and 3 in. (76 mm) diam through penetrants. Four molly bolts, symmetrically located, are required for nom 3-1/2 in. (89 mm) and 4 in. (102 mm) diam through penetrants. Steel collars are installed on each side of wall.
D. **Firestop Device* —** (Optional, Not Shown) - As an alternate to Item 3B and 3C, galv steel collar lined with an intumescent material sized to fit the specific diam of the through-penetrant. Device shall be installed around through-penetrant in accordance with accompanying installation instructions. Device incorporates anchor tabs for securement to each surface of wall assembly by means of 1/8 in. (3 mm) diam by 1-3/4 in. (45 mm) long steel molly bolts in conjunction with 1/4 in. (6 mm) diam by 1-1/2 in. (38 mm) diam steel fender washers.
SPECIFIED TECHNOLOGIES INC — SpecSeal Firestop Collar, SpecSeal LCC Collar or SpecSeal SSC Collar . When SpecSeal LCC Collar or SpecSeal SSC Collar are used, the max annular space shall be 1/8 in. (3 mm) for max 2-1/2 in. (64 mm) diam pipe and shall be max 1/4 in. (6 mm) for pipe larger than 2-1/2 in. (64 mm) diam.
*Bearing the UL Classification Mark

Last Updated on 2012-11-26

H5 — UL W-L-2059
NTS

System No. F-C-5007

December 10, 2001
F Rating — 1 Hr
T Ratings — 3/4 & 1 Hr

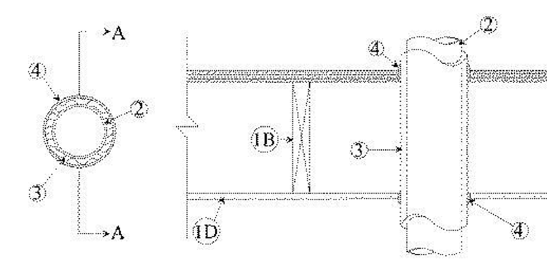

SECTION A-A

1. **Floor-Ceiling Assembly —** The fire-rated wood joist floor-ceiling assembly shall be constructed of the materials and in the manner specified in Design Nos. L512, L513 or L514 in the UL Fire Resistance Directory, and shall include the following construction features:
A. **Flooring System —** Lumber or min 1/2 in. plywood subfloor with lumber or min 3/4 in. plywood finish floor, or **Floor-Topping Mixture*** as specified in the individual Floor-Ceiling Design. Max diam of opening is 6 in.
B. **Wood Joists —** Nom 2 by 10 in. lumber joists spaced 16 in. OC with nom 1 by 3 in. lumber bridging and with ends firestopped.
C. **Furring Channels —** (Not Shown) — Resilient galv steel furring installed perpendicular to wood joists between wallboard (Item 1D) and wood joists and spaced max 24 in. OC.
D. **Gypsum Board* —** Nom 4 ft wide by 1/2 or 5/8 in. thick as specified in the individual Floor-Ceiling Design. Gypsum board attached to wood joists and furring channels as specified in the individual Floor-Ceiling Design. Max diam of opening is 6 in.
2. **Through Penetrants —** One metallic pipe or tubing installed approximately midway between wood joist and centered within the firestop system. Diam of openings hole-sawed through flooring system and through gypsum board ceiling to be nom 1/4 in. larger than the outside diam of through penetrant. Pipe or tubing to be rigidly supported on both sizes of floor-ceiling assembly. The following types and sizes of metallic pipes or tubing may be used:
A. **Steel Pipe —** Nom 4 in. diam (or smaller) Schedule 5 (or heavier) steel pipe.
B. **Copper Pipe —** Nom 4 in. diam (or smaller) Regular (or heavier) copper pipe.
C. **Copper Tubing —** Nom 4 in. diam (or smaller) Type L (or heavier) copper tubing.
The T Rating of the firestop system is dependent upon the type of penetrant used as tabulated below:

Penetrant Type	T Rating Hr
Steel Pipe	1
Copper Pipe	3/4
Copper Tubing	3/4

3. **Pipe Covering* —** The following types of pipe coverings may be used:
A. **Pipe and Equipment Covering — Materials* —** Nom 1/2 in. thick hollow cylindrical heavy density (min 3.5 pcf) glass fiber units jacketed on the outside with an all service jacket. Longitudinal joints sealed with metal fasteners or factory-applied self-sealing tape. Transverse joints secured with metal fasteners or with butt tape supplied with the product. Diam of openings hole-sawed through flooring system and through gypsum board ceiling to be nom 1/4 in. larger than the outside diam of through-penetrant.
See **Pipe and Equipment Covering — Materials** (BRGU) category in the Building Materials Directory for names of manufacturers. Any pipe covering material meeting the above specifications and bearing the UL Classification Marking with a Flame Spread Index of 25 or less and a Smoke Developed Index of 50 or less may be used.
B. **Pipe Covering Materials* —** Nom 1/2 in. thick unfaced mineral fiber pipe insulation sized to the outside diam of pipe or tube. Pipe insulation secured with min 8 AWG steel wire spaced max 12 in. OC. Diam of openings hole-sawed through flooring system and through gypsum board ceiling to be nom 1/4 in. larger than the outside diam of through-penetrant.
IIG MINWOOL L L C — High Temperature Pipe Insulation 1200, High Temperature Pipe Insulation BWT or High Temperature Pipe Insulation Thermaloc
C. **Sheathing Material* —** (Not Shown) — Used in conjunction with Item 3B. Foil-scrim-kraft or all service jacket material shall be wrapped around the outer circumference of the pipe insulation (Item 3B) with the kraft side exposed. Longitudinal joints and transverse joints sealed with metal fasteners or with butt tape.
See **Sheathing Materials** (BVDV) category in the Building Materials Directory for names of manufacturers. Any sheathing material meeting the above specifications and bearing the UL Classification Marking with a Flame Spread Index of 25 or less and a Smoke Developed Index of 50 or less may be used.
4. **Fill, Void or Cavity Material* — Caulk —** On top of assembly, a min 1-1/8 in. depth of fill material applied within annulus on top surface of floor. On bottom of assembly, a min 1/2 in. depth of fill material applied within annulus on bottom surface of ceiling. Additional fill material to be installed such that a min 1/2 in. thick crown is formed around the through penetrant on both sides of floor-ceiling assembly.
A/D FIRE PROTECTION SYSTEMS INC — A/D FireBarrier Silicone

*** Indicates such products shall bear the UL or cUL Certification Mark for jurisdictions employing the UL or cUL Certification (such as Canada), respectively.**

E7 — F-C-5007
12" = 1'-0"

System No. F-C-7060

January 6, 2015

ANSI/UL1479 (ASTM E814)	CAN/ULC S115
F Rating — 1 Hr	F Rating — 1 Hr
T Ratings — 1 Hr	FT Ratings — 1 Hr
L Rating At Ambient — Less Than 1 CFM/sq ft	FH Rating — 1 Hr
	FTH Ratings — 1 Hr
	L Rating At Ambient — Less Than 1 CFM/sq ft

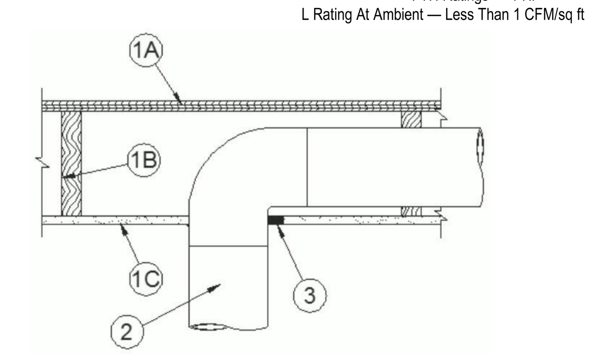

1. **Floor — Ceiling Assembly —** The 1 hr fire-rated wood joist floor-ceiling assembly shall be constructed of the materials and in the manner specified in the individual L500 Designs in the UL Fire Resistance Directory, as summarized below:

A. **Flooring System —** Lumber or plywood subfloor with finish floor of lumber, plywood or **Floor Topping Mixture*** as specified in the individual Floor-Ceiling Design.

B. **Wood Joists —** Nom 10 in. (254 mm) deep (or deeper) lumber, steel or combination lumber and steel joists, trusses or **Structural Wood Members*** with bridging as required and with ends firestopped.

C. **Gypsum Board* —** Thickness, type, number of layers and fasteners as required in the individual Floor-Ceiling Design. Diam of opening is to be max 1-1/2 in. (38 mm) larger than diam of steel duct.

1A. **Chase Wall —** (Optional, Not Shown) — The through penetrant (Item 2) may be routed through a 1 hr fire rated single, double or staggered wood stud/gypsum board chase wall. Depth of chase wall stud cavity to be min 1/2 in. (13 mm) greater than diameter of opening cut in top plates to accommodate the through penetrant (Item 2). The chase wall shall be constructed of the materials and in the manner specified in the individual U300 Series Wall and Partition Designs in the UL Fire Resistance Directory and shall include the following construction features:

A. **Studs —** Nom 2 by 4 in. (51 by 102 mm), 2 by 6 in. (51 by 152 mm) or double nom 2 by 4 in. (51 by 102 mm) lumber studs.

B. **Sole Plate —** Nom 2 by 4 in. (51 by 102 mm), 2 by 6 in. (51 by 152 mm)or parallel 2 by 4 in. (51 by 102 mm) lumber plates, tightly butted.

C. **Top Plate —** The double top plate shall consist of two nom 2 by 4 in (51 by 102 mm)., two nom 2 by 6 in. (51 by 152 mm) or two sets of parallel 2 by 4 in. (51 by 102 mm) lumber plates, tightly butted. Diam of opening is to be max 1-1/2 in. (38 mm) larger than diam of steel duct. As an alternate, the opening may be square-cut with a max dimension 1-1/2 in. (38 mm) greater than the diam of the pipe. Plates may be discontinuous over opening, terminating at two opposing edges of opening. Max length of discontinuity is 7-1/2 in. (191 mm).

D. **Steel Plate —** When lumber plates are discontinuous, nom 1-1/2 in. (38 mm) wide No. 20 gauge (or heavier) galv steel plates shall be installed to connect discontinuous lumber plates and to provide a form for the fill material. Steel plates sized to lap 2 in. (51 mm) onto each discontinuous lumber plate and secured to lumber plates with steel screws or nails.

E. **Gypsum Board* —** Thickness, type, number of layers and fasteners shall be as specified in the individual Wall and Partition Design.

2. **Steel Duct —** One nom 6 in. (152 mm) diam (or smaller) No. 30 GA (or heavier) galvanized steel duct to be installed either concentrically or eccentrically within the opening. Annular space to be min 0 in. (point contact) to max 1-1/2 in. (38 mm). Steel duct to be rigidly supported on both sides of floor-ceiling assembly.

3. **Fill, Void or Cavity Material* — Sealant —** Min 5/8 in. (16 mm) thickness of fill material applied within the annulus, flush with bottom surface of ceiling or top plate. Min 1/4 in. (6 mm) diam bead of fill material applied at point contact location at the penetrant/ceiling or chase wall top plate interface.
SPECIFIED TECHNOLOGIES INC — SpecSeal LCI Sealant, SpecSeal LC150 Sealant or Type WF300 Caulk

*** Indicates such products shall bear the UL or cUL Certification Mark for jurisdictions employing the UL or cUL Certification (such as Canada), respectively.**

E9 — F-C-7060
12" = 1'-0"

ISSUE HISTORY

No.	Date	Description
1	04/15/2022	PERMIT SUBMITTAL

REVISION HISTORY

No.	Date	Description

FUGLEBERG KOCH
2555 Temple Trail, Winter Park, FL 32789 (407) 629-0595
www. fuglebergkoch.com AA26002103

CONSULTANT

STATE OF ALABAMA — MICHAEL E. GOVE — 8234 — REGISTERED ARCHITECT — 4/15/22

MICHAEL GOVE
8234

THE ROBERT MADISON	Drawn:	MB
MADISON, ALABAMA	Checked:	JK
	Approval:	MG
	Date:	04/15/2022
	Project #:	5722

UL REFERENCE DIRECTORY PENETRATIONS

A0.37

PLOTTED: 5/3/2022 3:18:39 PM

© 2018 These documents and their contents are the property of FUGLEBERG KOCH - AA26002103, and are issued only for the specific project noted on these drawings. Any reproductions, revisions, or modifications of these documents without the expressed written consent of Fugleberg Koch is prohibited by law.

The Roberts Apartments at Town Madison

Address:
Dunlop Blvd
Madison, AL 35758

Prepared for:
Rohdie Group

Plan Set Date:
November 16, 2021

General Notes:

1.The locations of existing utilities are shown in as approximate only. The contractor shall verify the exact location of all existing utilities before commencing work. Contractor shall be fully responsible for any and all damages which might occur by his failure to exactly locate and preserve any and all utilities.

2.Contractor is responsible for making application and paying for necessary permits.

3.The Contractor shall prevent the destruction of all survey monuments, bench marks, property corners and all other survey points. Where the removal of such points are necessary for the accomplishment of the work, the Contractor shall inform the Engineer in writing, prior to the disturbance of any point, and shall not disturb the point until written permission to do so has been issued by the Engineer.

4.All existing trees outside of the limits of work shall be protected during the accomplishment of the work, and are not to be damaged in any manner.

5.All boulders, debris, excess construction materials, material generated from demolition of existing structures and facilities or trash shall be removed from site at contractor's expense.

6.Pavement cuts shall be repaired with material in-kind to that removed.

7.In accordance with generally accepted construction practices, the contractor is solely and completely responsible for conditions of the job site, including safety of all persons and property during performance of the work. This requirement applies continuously and shall not be limited to normal working hours.

8.Contractor shall provide adequate traffic control devices and safety measures for construction work within public right-of-ways in accordance with the Manual on Uniform Traffic Control Devices for Streets and Highways.

9.The duty of the Engineer to conduct construction observation of the contractor's performance is not intended to include review of the adequacy of the Contractor's safety measures, in, on or near the construction site.

10.The Contractor shall be responsible for cleaning dirt and debris from the adjoining streets parking lots, and drives during construction. Any damage to adjoining and existing facilities shall be repaired by the Contractor, at no additional cost to the owner, during the construction of this site.

11.No fill dirt shall be placed on the property that might interfere with drainage flow from adjacent property. Storm drainage system shall be installed prior to fill material being placed.

12.The Contractor shall be totally responsible for TVI, vacuum testing manholes, and air testing sewer lines if required.

13.No changes shall be made to these approved plans without the Engineer of Record being notified before changes are made and the Engineer of Record acquiring approval from the City Engineer.

14.All sanitary sewer pipe shall either be SDR 26 PVC or Class 350 Ductile Iron.

15. The City of Madison Construction Specifications Manual for Public Improvements, latest edition and any revision thereof, are hereby made part of these plans.

16. If approval from any State or Federal Regulatory Agency is required to perform work on this project, a copy of each permit required shall be delivered to the City of Madison Engineering Department prior to the approval of said plans.

17. The Alabama Handbook for Erosion Control, Sediment Control and Stormwater Management on Construction Sites and Urban Areas, Vol. 1 and 2, latest edition and any revision thereof, are hereby made a part of these plans.

18. Contractor is required to schedule a Pre-Construction meeting with Engineering Inspector before commencement of work. Call 256-797-8025 for scheduling or go to www.madisonal.gov/index.aspx?NID=126 (pre-construction requirements) for more information.

19. Call 811 prior to any digging for Utility work.

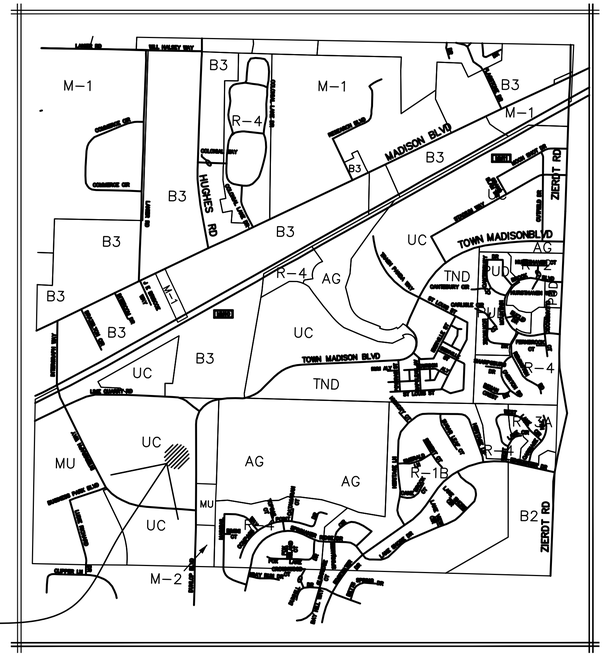

Site

Vicinity Map
Not to Scale

Sheet Index

Cover	C0
Existing Conditions & Demolition Plan	C1
Site Plan	C2.X
Keynote Plan	C2.3
Water Infrastructure Plan	C3
Storm Infrastructure Plan	C4.X
Sanitary Sewer Infrastructure Plan	C5.X
Grading & Drainage Plan	C6.X
Erosion Control Plan	C7
Fire Truck Access Plan	C8
Civil Details	C9.X

Certificate of Approval by Fire Department

The undersigned, as a duly authorized representative of the Madison Fire Department, City of Madison, AL, certifies the within site plan has been reviewed and approved.

By: _____

Date: 12-7-21

Certificate of Approval by City Council

The undersigned, as representative of the City Council of Madison, Alabama, hereby certified that the property and site plan has been approved by the City Council

By: _____

Date: 12-7-21

Certificate of Approval by City Engineer

The undersigned, as City Engineer of the City of Madison, AL, hereby approves the within site plan.

By: E. Michelle Dunson

Date: December 3, 2021

Certificate of Approval by Planning Director

The undersigned, as Director of Planning for the City of Madison, AL, hereby certifies that the property and site plan has been inspected, reviewed, and found to be compliant with the City's Zoning Ordinance and Subdivision Regulations.

By: _____

Date: 12/9/2021

Madison Utilities

Submitted for approval:

ENGINEER

DEVELOPER

APPROVED:

BUSINESS DEVELOPMENT COORDINATOR

GENERAL MANAGER

NOTE: CONSTRUCTION SPECIFICATIONS FOR WATER AND SANITARY SEWER LATEST EDITION AS ADOPTED BY MADISON UTILITES (MU), IS HEREBY MADE PART OF THESE PLANS. CONTRACTOR SHALL CONTACT MU TO SCHEDULE A PRE-CONSTUCTION MEETING PRIOR TO THE START OF ANY WATER OR SEWER CONSTRUCTION.

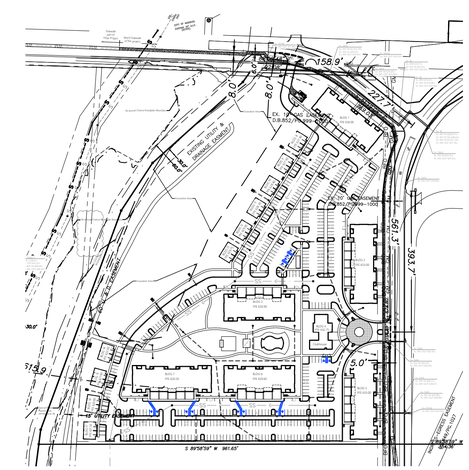

FINAL FOR DEVELOPMENT
DEC 09 2021

Overall View
Scale: 1" = 200'

TOWN MADISON

Prepared by:

MULLINS, LLC
CIVIL ENGINEERING, DEVELOPMENT DESIGN
SURVEYING, LANDSCAPE ARCHITECTURE
2101 West Clinton Avenue, Suite 503, Huntsville, AL 35805
(256) 690-5312

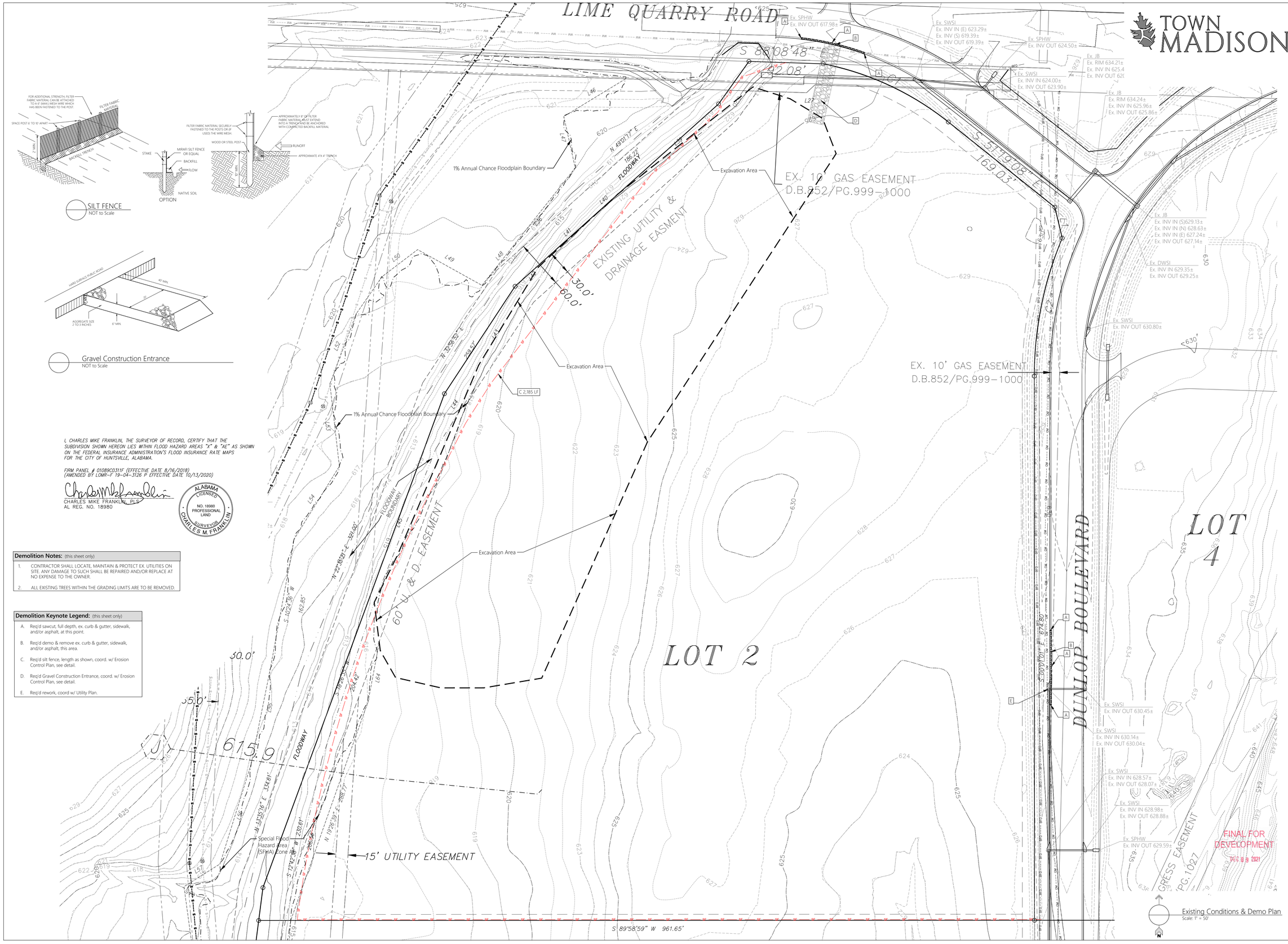

FOR ADDITIONAL STRENGTH, FILTER FABRIC MATERIAL CAN BE ATTACHED TO A 6' (MAX.) MESH WIRE WHICH HAS BEEN FASTENED TO THE POST.
FILTER FABRIC MATERIAL
SPACE POST 6' TO 10' APART
2' MIN.
BACKFILL TRENCH
FILTER FABRIC MATERIAL SECURELY FASTENED TO THE POSTS OR IF USED THE WIRE MESH.
WOOD OR STEEL POST
APPROXIMATELY 8" OF FILTER FABRIC MATERIAL MUST EXTEND INTO A TRENCH AND BE ANCHORED WITH COMPACTED BACKFILL MATERIAL
RUNOFF
APPROXIMATE 4"X 4" TRENCH
10' MIN.
STAKE
MIRAFI SILT FENCE OR EQUAL
BACKFILL
FLOW
NATIVE SOIL
OPTION

SILT FENCE
NOT to Scale

HARD SURFACE PUBLIC ROAD
40' MIN.
AGGREGATE SIZE 2 TO 3 INCHES
6" MIN.

Gravel Construction Entrance
NOT to Scale

I, CHARLES MIKE FRANKLIN, THE SURVEYOR OF RECORD, CERTIFY THAT THE SUBDIVISION SHOWN HEREON LIES WITHIN FLOOD HAZARD AREAS "X" & "AE" AS SHOWN ON THE FEDERAL INSURANCE ADMINISTRATION'S FLOOD INSURANCE RATE MAPS FOR THE CITY OF HUNTSVILLE, ALABAMA.

FIRM PANEL # 01089C0311F (EFFECTIVE DATE 8/16/2018)
(AMENDED BY LOMR-F 19-04-3126 P EFFECTIVE DATE 10/13/2020)

CHARLES MIKE FRANKLIN, PLS
AL REG. NO. 18980

ALABAMA LICENSED NO. 18980 PROFESSIONAL LAND SURVEYOR CHARLES M. FRANKLIN

Demolition Notes: (this sheet only)

1. CONTRACTOR SHALL LOCATE, MAINTAIN & PROTECT EX. UTILITIES ON SITE. ANY DAMAGE TO SUCH SHALL BE REPAIRED AND/OR REPLACE AT NO EXPENSE TO THE OWNER.
2. ALL EXISTING TREES WITHIN THE GRADING LIMITS ARE TO BE REMOVED.

Demolition Keynote Legend: (this sheet only)

A. Req'd sawcut, full depth, ex. curb & gutter, sidewalk, and/or asphalt, at this point.
B. Req'd demo & remove ex. curb & gutter, sidewalk, and/or asphalt, this area.
C. Req'd silt fence, length as shown, coord. w/ Erosion Control Plan, see detail.
D. Req'd Gravel Construction Entrance, coord. w/ Erosion Control Plan, see detail.
E. Req'd rework, coord w/ Utility Plan.

REVISIONS
Date: ---
Date: ---
Date: ---
Date: ---
Date: ---
Date: ---
Date: ---
Date: ---

All documents, including Drawings and Bid Specifications, prepared or furnished by Firms listed on face, are instruments of service in respect of the client and firms listed on face, shall retain an ownership and property interest therein whether or not the Project is completed. Such documents are not intended to represented to be suitable for reuse by the Client or others on extensions of the Project or on any other project. Any reuse without written verification by Firms listed on face will entitle Firms listed on face to further compensation at rates to be agreed upon by Firms listed on face and the Client.

MULLINS, LLC
CIVIL ENGINEERING, DEVELOPMENT DESIGN
SURVEYING, LANDSCAPE ARCHITECTURE
2101 West Clinton Avenue, Suite 503, Huntsville, AL 35805
(256) 690-5312

ALABAMA REGISTERED PROFESSIONAL ENGINEER MICHAEL J. MULLINS
November 16, 2021

The Roberts Apartments at TM

Madison, AL

PREPARED FOR: Rohdie Group

Existing Conditions & Demolition Plan

Job No. 21-128
Date: 2021 11-16
Drawn By: JLH
Checked By: RS

SHEET NUMBER

C1

AASHTO NOTE:

THE INTERSECTION SITE DISTANCE AND GEOMETRIC DESIGN OF THIS SUBDIVISION MEET RECOMMENDATIONS SET FORTH IN THE PREVAILING AASHTO STANDARDS.

INTERSECTION SIGHT DISTANCE

LOCATION	DESIGN SPEED	AASHTO GUIDELINES		ACTUAL SIGHT DISTANCE		SIGHT DISTANCE SATISFIED
		RIGHT	LEFT	RIGHT	LEFT	
DRIVE @ LIMESTONE QUARRY ROAD	25 MPH	280	240	386	500+	YES
DRIVE @ DUNLOP BLVD	45 MPH	500	430	500+	500+	YES

Fire Flow & Notes:

Date & Time Tested: 6-3-21 at 9:20 AM

Static	112
Residual	88
Flow	76

1,465 GPM

Note: Knox Boxes shall be required for riser room access

City Notes:

1. All traffic controls devices shall be erected and maintained in conformance with the Manual of Uniform-Control Devices and any revisions thereof.
2. Required fire flows cannot be determined precisely until the specific building use, construction type, and other faactors have been disclosed and reviewed. The applicant will comply with the fire flow and fire safety and suppression requirements and all adopted city codes and regulations.
3. All drainage ditches are to be centered on property lines unless shown.
4. All utilities will be underground.
5. If adverse conditions are uncovered during construction, the city engineer may require modification of these plans to the extent necessary to assure compliance with the city's construction specifications manual.
6. Setbacks are governed by the latest addition of the Madison Zoning Ordinance.
7. Any signage requires separate review, approval, and permitting.

Layout Notes:

1. All dimensions are from back of curb, U.N.O.
2. Sidewalks to have max cross slope of 2%.

Site Notes:

1. Property line bearings are based on state plan coordinates, NAD 1983, as determined by CORS, GTAC. Distances are based on actual field survey. All bearing and distances are plat and measured.
2. All traffic control devices shall be erected and maintained in conformance with the Manual on Uniform Traffic Control Devices and any revisions thereof.
3. All drainage ditches shall be centered on property lines unless otherwise shown.
4. All utilities are underground.
5. If adverse conditions on the site are uncovered during construction, the City Engineer may require modification to these plans to the extent necessary to assure compliance with the City's Construction Specifications.
6. All lots shall be graded so that runoff will be directed to the Street or to drainage ways in a dedicated easement.
7. Setbacks are governed by the latest edition of the Madison Zoning Ordinance.
9. Required fire flows cannot be determined precisely until the specific building use, construction type, and other factors have been disclosed and reviewed. The applicant will comply with the fire flow and fire safety and suppression requirements of all adopted City codes and regulations.
10. Plaza areas shall be hardscape areas of concrete, paver, or some other durable, consistent material, compliant with ADA accessible surfaces; pattern & materials to be further refined through the design and construction process.
11. Contractor shall coordinate with site Engineer for handicap ramp layout prior to construction to ensure compliance with design and ADA requirements.
12. Special maintenance agreement for utilities under streetscape conditions/elements/materials (pavers, walls, trees, etc.) required prior to issuance of C.O.
13. Coordinate with Geotechnical Engineer to ensure roads in excavated areas achieve proper compaction to Geotechnical Engineers requirements and recommendations.

Site Information:

Total Lot Area:

Pre Subdivided	30.48 acre (1,327,894 sf)
Remaining Property	12.81 acre (558,067 sf)
Post Subdivision	17.67 acre (769,807 sf)
Zoning District:	UC (Urban Center District)
Adjoining Zoning	
North	B3 (General Business District)
South	UC (Urban Center District)
West	UC (Urban Center District)
East	UC (Urban Center District)
Building Info:	
Sprinkler System	Residential Buildings NFPA 13r
Stories (max.)	4
Height	
4-Story Buildings	55'-3"
Townhouse Apartment	27'-8"
Type of Construction	
4-Story Building	V(a)
Others	V(b)
Occupancy type	
Residential Buildings	R-2
Clubhouse & Fitness Buildings	A-3
Dumpster Enclosure	U
Units:	
1 Bed	102
2 Bed	138
3 Bed	44
Total	284
Density Schedule:	
Net	284/17.67 = 16.07 = 16 units/acre

Building Number	SF * Stories	Total SF by Type
Building 1	12,989 * 4	= 51,956 sf
Building 2 & 5	14,612 * 4	= 116,896 sf
Building 3 & 6	13,043 * 4	= 104,344 sf
Building 4	4,415 * 1	= 4,415 sf
Building 7	14,610 * 4	= 58,440 sf
Building 8 - 17	1,787 * 2	= 32,166 sf
Grill Building	480 * 1	= 480 sf
Maintenance and Pool Building	200 * 1	= 200 sf
Total		= 317,948 sf
Ratio	317,948 sf / 769,807 sf = 0.41	

Total Disturbed Area:	
Total	17.67 acre
Parking Information:	
Req'd Parking	
Units	1.0 * units (1 bed) + 2.0 * units (2 bed) + 2.5 * units (3 bed) ==>
	1.0 * 102 + 2 * 138 + 2.5 * 44 = 102 + 276 + 110 =
Total Required	488
Total Provided	520
Clubhouse/Rental Office	
Total Required	1
Total Provided	17
Tandem Spaces	78
ADA Accessible Parking	
Req'd Parking	
Total Required	13
Total Provided	14
Bicycle Information:	
Req'd Spaces	
Units	unit / 5 ==> 284/5 = 56.8
Total Required	57
Total Provided	62

Parking Table:

Parking Info	
Attached Garage	78
Open	442
- Compact	21 (4.8%)
- Standard Parking	421 (95.2%)
Total	520
Tandem Spaces	78
Clubhouse/Vistor	17
Bicycle	62

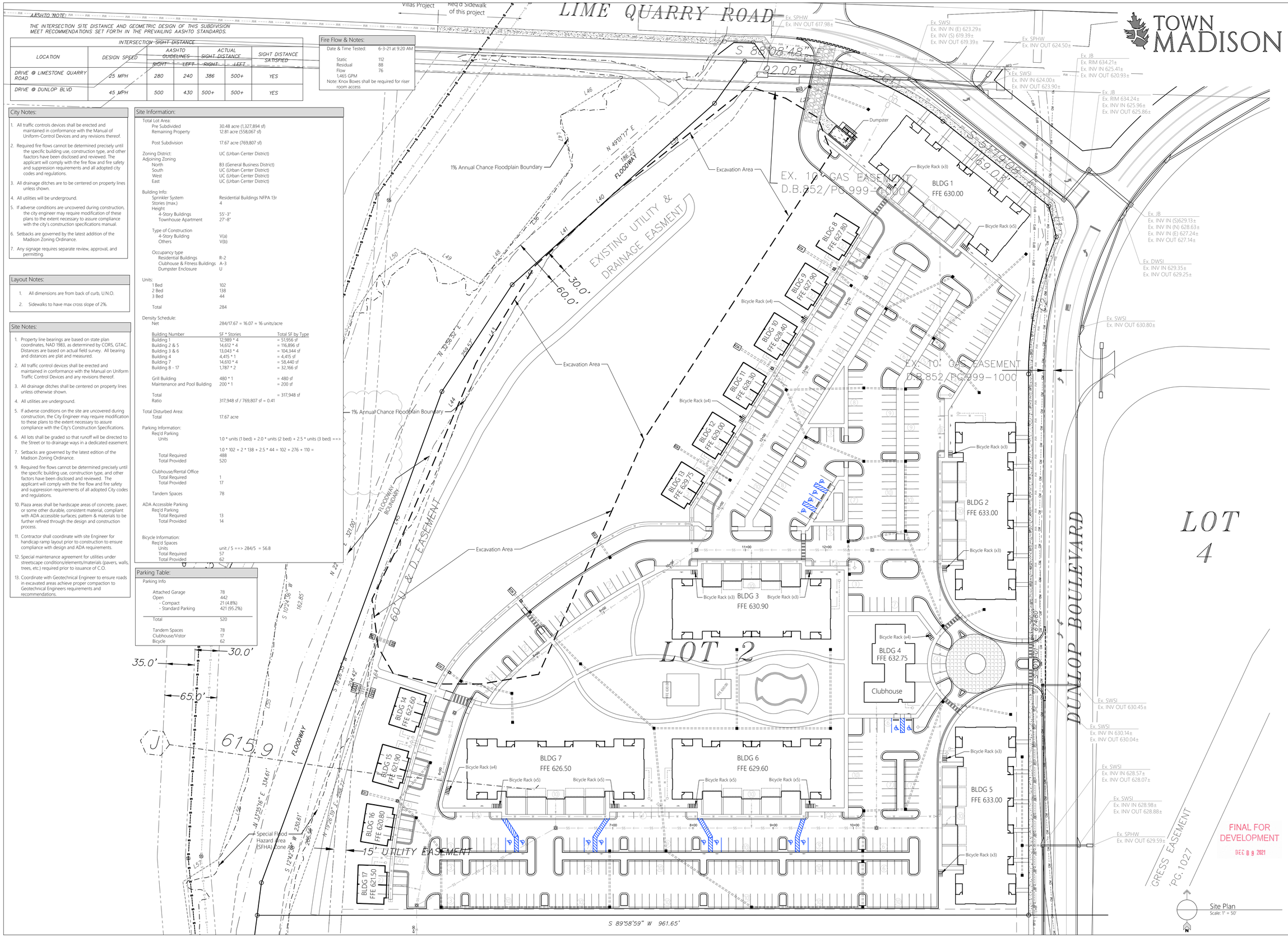

REVISIONS

Date: ---
Date: ---
Date: ---
Date: ---
Date: ---
Date: ---
Date: ---
Date: ---
Date: ---

All documents, including Drawings and Bid Specifications, prepared or furnished by Firms listed on face, are instruments of service in respect of the client and firms listed on face, shall retain an ownership and property interest therein whether or not the Project is completed. Such documents are not intended to be represented to be suitable for reuse by the Client or others on extensions of the Project or on any other project. Any reuse without written verification by Firms listed on face will entitle Firms listed on face to further compensation at rates to be agreed upon by Firms listed on face and the Client.

MULLINS, LLC
CIVIL ENGINEERING, DEVELOPMENT DESIGN
SURVEYING, LANDSCAPE ARCHITECTURE
2101 West Clinton Avenue, Suite 503, Huntsville, AL 35805
(256) 690-5312

ALABAMA REGISTERED PROFESSIONAL ENGINEER RICHARD VERNON MULLINS
November 16, 2021

The Roberts Apartments at TM

Madison, AL

PREPARED FOR: Rohdie Group

Site Plan

Job No.	21-128
Date:	2021 11-16
Drawn By:	JLH
Checked By:	RS

SHEET NUMBER

C2

Layout Notes:

1. All dimensions are from back of curb, U.N.O.
2. Sidewalks to have max cross slope of 2%.

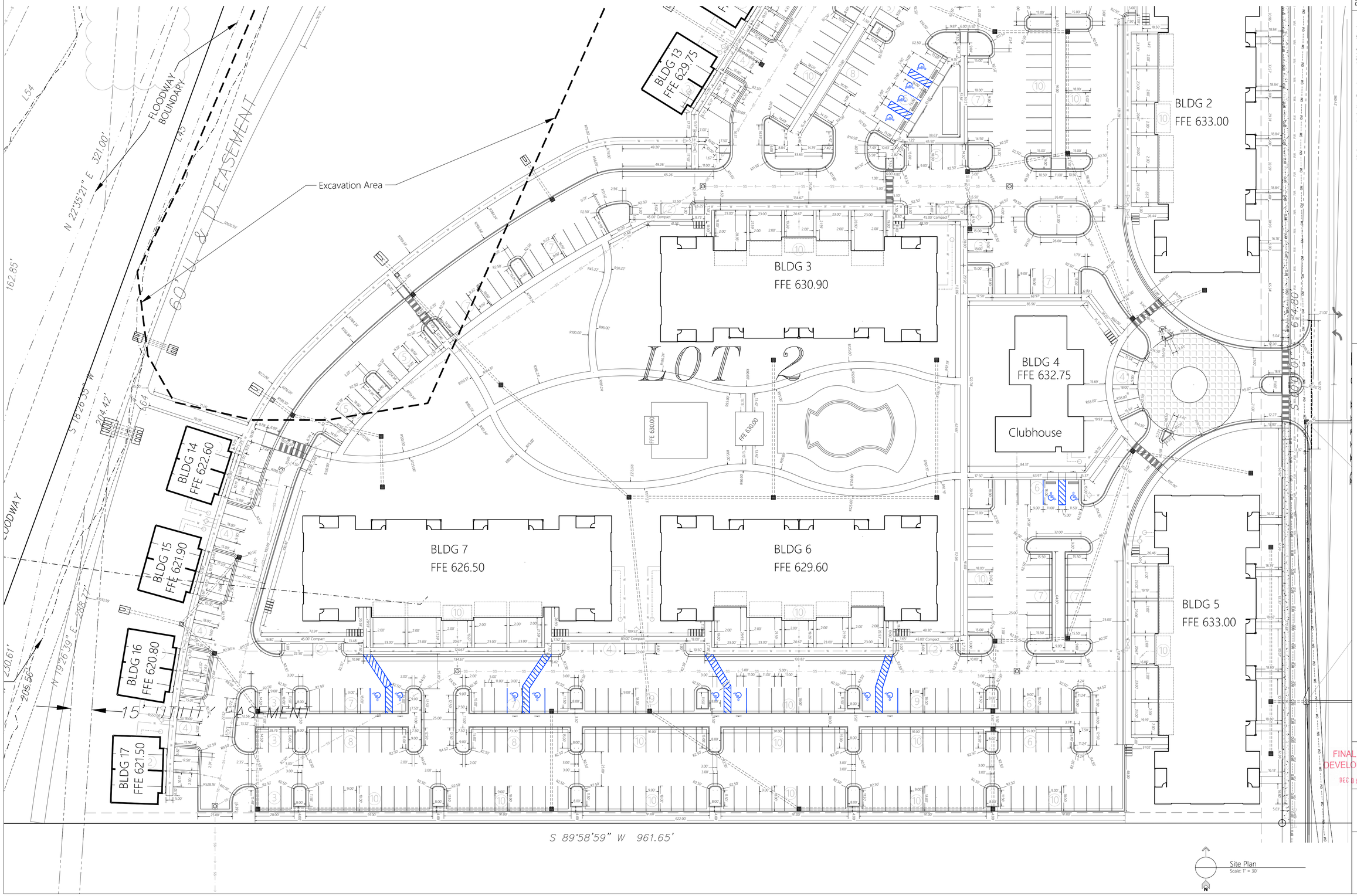

TOWN MADISON

REVISIONS
Date: ---
Date: ---
Date: ---
Date: ---
Date: ---
Date: ---
Date: ---
Date: ---
Date: ---
Date: ---

All documents, including Drawings and Bid Specifications, prepared or furnished by Firms listed on face, are instruments of service in respect of the client and firms listed on face, shall retain an ownership and property interest therein whether or not the Project is completed. Such documents are not intended to be suitable for reuse by the Client or others on extensions of the Project or on any other project. Any reuse without written verification by Firms listed on face will entitle Firms listed on face to further compensation at rates to be agreed upon by Firms listed on face and the Client.

MULLINS, LLC
CIVIL ENGINEERING, DEVELOPMENT DESIGN
SURVEYING, LANDSCAPE ARCHITECTURE
2101 West Clinton Avenue, Suite 503, Huntsville, AL 35805
(256) 690-5312

ALABAMA REGISTERED PROFESSIONAL ENGINEER
November 16, 2021

The Roberts Apartments at TM

Madison, AL

PREPARED FOR: Rohdie Group

FINAL FOR DEVELOPMENT REVIEW
DEC 09 2021

Site Plan

Job No. 21-128
Date: 2021 11-16
Drawn By: JLH
Checked By: RS

SHEET NUMBER

C2.1

Layout Notes:

1. All dimensions are from back of curb, U.N.O.
2. Sidewalks to have max cross slope of 2%.

TOWN MADISON

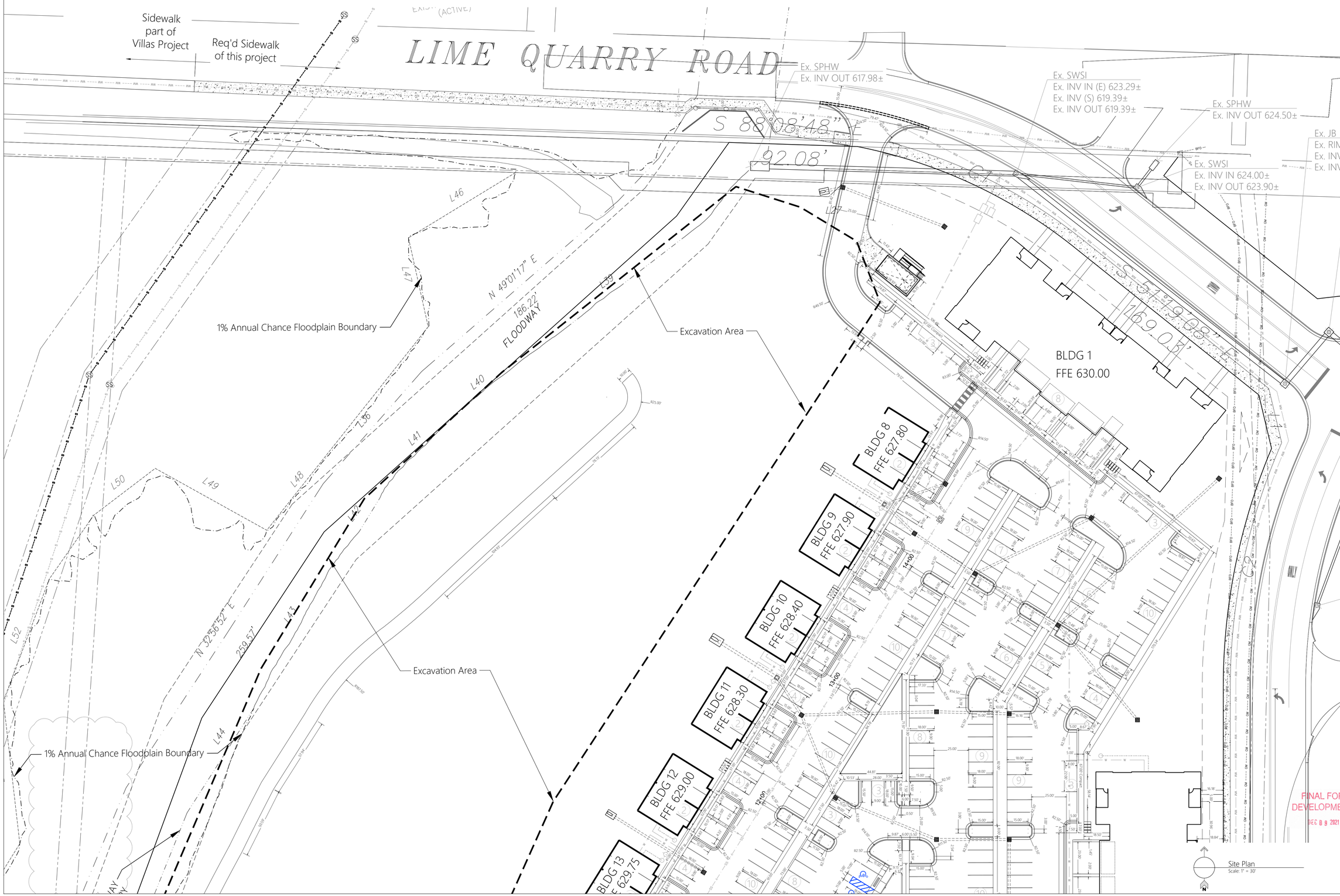

Site Plan
Scale: 1" = 30'

REVISIONS

Date: ---
Date: ---
Date: ---
Date: ---
Date: ---
Date: ---
Date: ---
Date: ---
Date: ---
Date: ---

All documents, including Drawings and Bid Specifications, prepared or furnished by Firms listed on face, are instruments of service in respect of the client and firms listed on face, shall retain an ownership and property interest therein whether or not the Project is completed. Such documents are not intended to represented to be suitable for reuse by the Client or others on extensions of the Project or on any other project. Any reuse without written verification by Firms listed on face will entitle Firms listed on face to further compensation at rates to be agreed upon by Firms listed on face and the Client.

MULLINS, LLC
CIVIL ENGINEERING, DEVELOPMENT DESIGN
SURVEYING, LANDSCAPE ARCHITECTURE
2101 West Clinton Avenue, Suite 503, Huntsville, AL 35805
(256) 690-5312

ALABAMA REGISTERED PROFESSIONAL ENGINEER RICHARD S. MULLINS
November 16, 2021

The Roberts Apartments at TM

Madison, AL

PREPARED FOR: Rohdie Group

Site Plan

Job No. 21-128
Date: 2021 11-16
Drawn By: JLH
Checked By: RS

SHEET NUMBER

C2.2

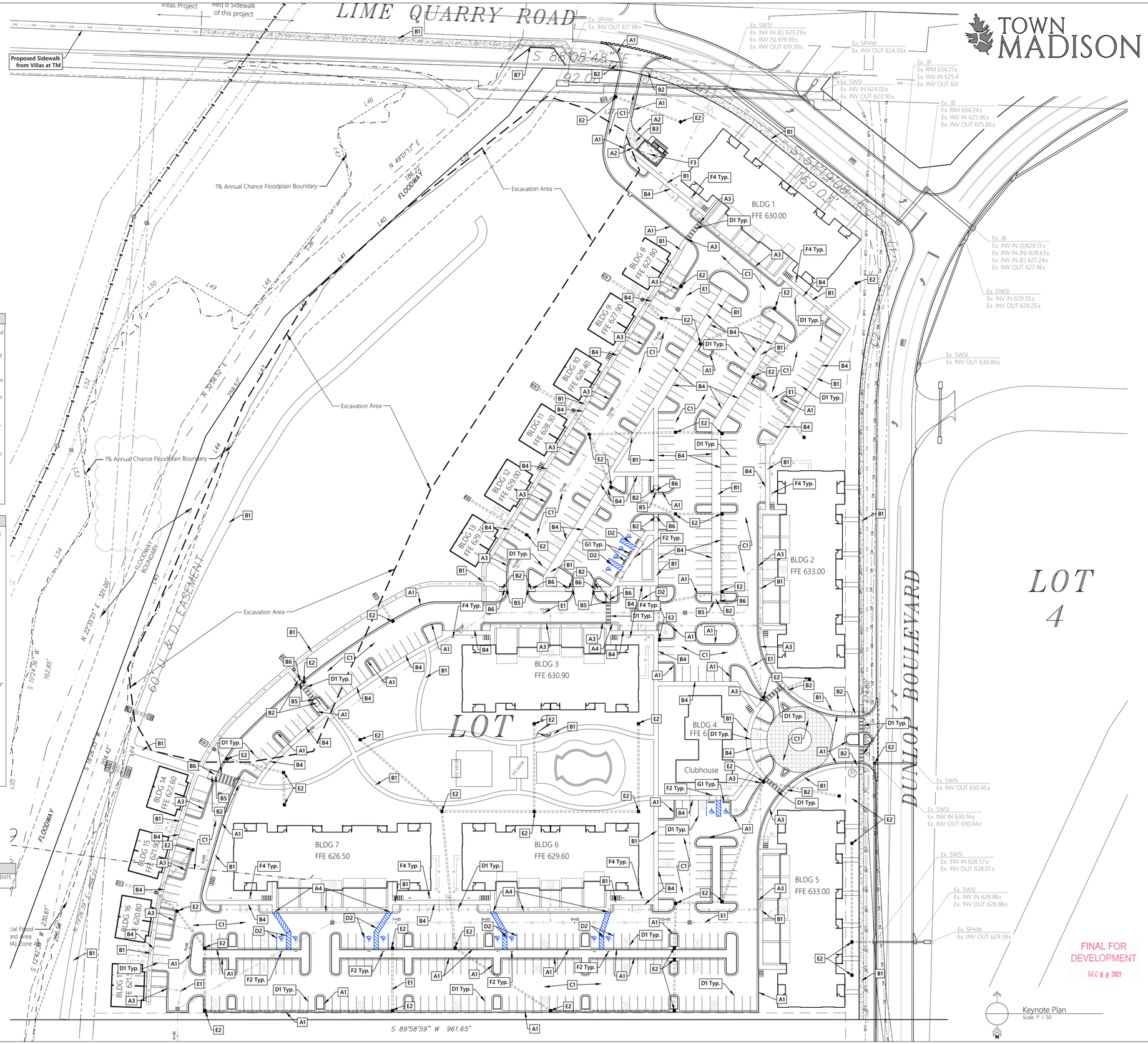

TOWN MADISON

Notes:

1. All traffic control devices shall be erected and maintained in conformance with the Manual on Uniform Traffic-Control Devices and any revision thereof.
2. Required Fire Flows cannot be determined precisely until the specific building use, construction type and other factors have been disclosed and reviewed. The applicant will comply with the fire flow and fire safety and suppression requirements of all adopted city codes and regulations.
3. All drainage ditches are to be centered on property lines unless otherwise shown.
4. All utilities shall be underground.
5. If adverse conditions are uncovered during construction, the city engineer may require modification of these plans to the extent necessary to assure compliance with the City's construction specification manual.
6. All lots shall be graded so that run-off will be directed to the street or to drainage ways in a dedicated easement.
7. Setbacks are governed by the latest edition of the Zoning Ordinance of the City of Madison.
8. Dumpster enclosure, per City of Madison requirements, required prior to Certificate of Occupancy for building.

Keynote Legend:

A1	Req'd Standard 24" Conc. Curb & Gutter, see detail.
A2	Req'd Concrete Integral Curb, see detail.
A3	Req'd Fully Mountable Curb w/ Channel, see detail.
A4	Req'd 18" Conc. Ribbon Curb, see detail.
B1	Req'd 4" thick Conc. Sidewalk, width as shown.
B2	Req'd Curb Ramp, curb-return style
B3	Req'd 6" thick Conc. Paving with 6x6 10/10 WWM
B4	Req'd Turn-down Sidewalk, see detail.
B5	Req'd flush condition between pavement and sidewalk, coord. w/ Grading Plan.
B6	Req'd truncated domes and detectible warning pavers.
B7	Req'd sidewalk guardrail, per Town Madison Specs.
C1	Req'd Asphalt Paving, see detail.
D1	Req'd parking stall striping, white, 4" wide, painted.
D2	Req'd ADA parking stall striping & markings, blue, 4" wide, painted.
E1	Req'd Utility Infrastructure, see Utility Plan.
E2	Req'd Grate Inlet, see Utility Plan
F1	Req'd "STOP" sign, per Town Madison Specs.
F2	Req'd ADA Parking sign, per Town Madison Specs.
F3	Req'd Dumpster enclosure; coord. w/ Architectural Plans.
F4	Req'd "Compact Parking" sign, per Town Madison Specs.
G1	Req'd Concrete 8" Concrete Wheel Stop.

STOP
R1-1
F1

Fire Department Notes:

1. SECURITY GATES SHALL MEET MADISON FIRE & RESCUE REQUIREMENTS FOR ACCESSIBILITY (CLICK 2 ENTER)

REVISIONS

Date: ---
Date: ---
Date: ---
Date: ---
Date: ---
Date: ---
Date: ---
Date: ---
Date: ---

All documents, including Drawings and Bid Specifications, prepared or furnished by Firms listed on face, are instruments of service in respect of the client and firms listed on face, shall retain an ownership and property interest therein whether or not the Project is completed. Such documents are not intended to represented to be suitable for reuse by the Client or others on extensions of the Project or on any other project. Any reuse without written verification by Firms listed on face will entitle Firms listed on face to further compensation at rates to be agreed upon by Firms listed on face and the Client.

MULLINS, LLC
CIVIL ENGINEERING, DEVELOPMENT DESIGN
SURVEYING, LANDSCAPE ARCHITECTURE
2101 West Clinton Avenue, Suite 503, Huntsville, AL 35805
(256) 690-5312

ALABAMA REGISTERED PROFESSIONAL ENGINEER RAVEN S. MULLINS
November 16, 2021

The Roberts Apartments at TM

Madison, AL

PREPARED FOR: Rohdie Group

Keynote Plan

Job No. 21-128
Date: 2021 11-16
Drawn By: JLH
Checked By: RS

SHEET NUMBER

C2.3

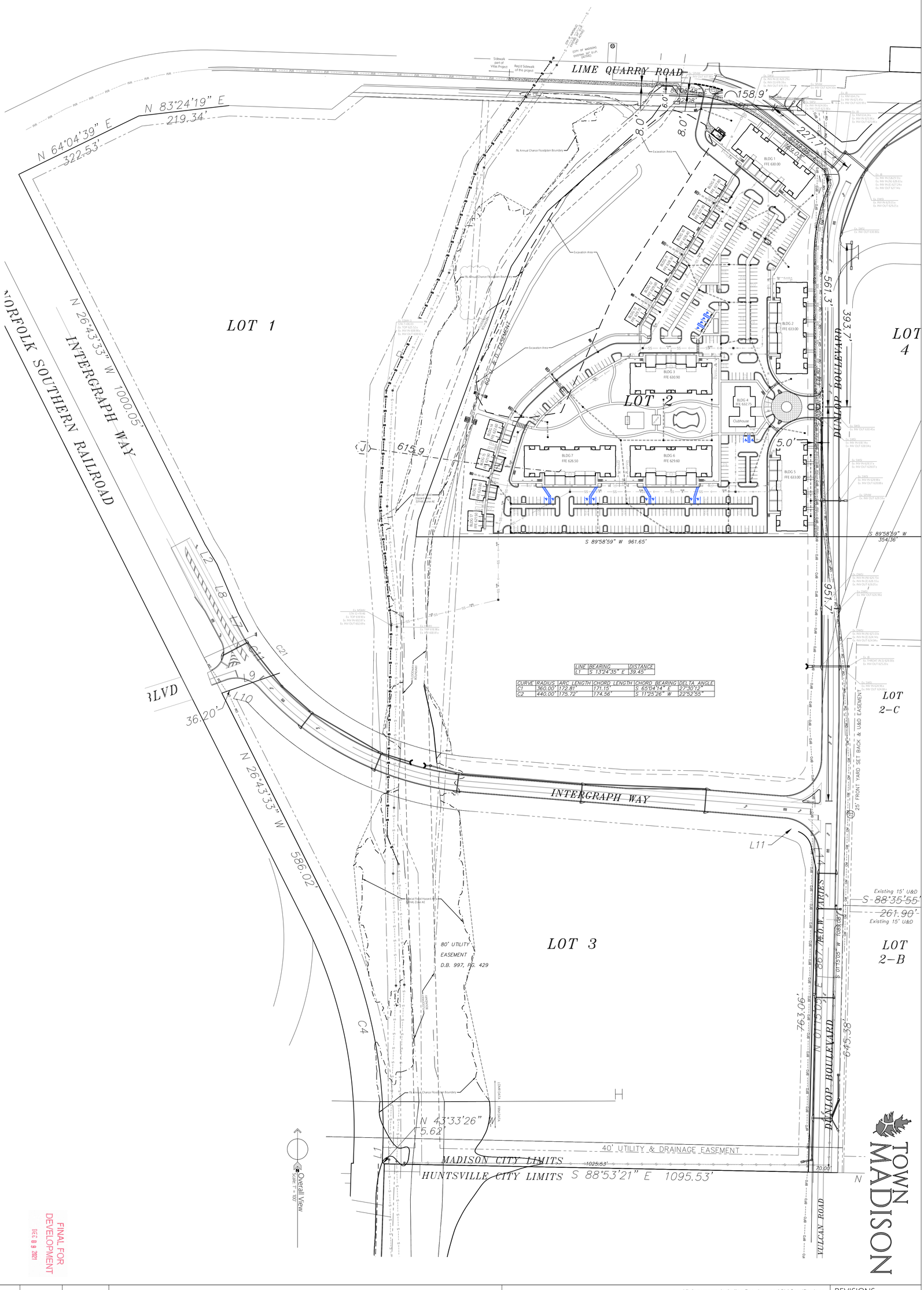

LINE	BEARING	DISTANCE
L1	S 13°24'35" E	39.45'

CURVE	RADIUS	ARC LENGTH	CHORD LENGTH	CHORD BEARING	DELTA ANGLE
C1	360.00'	172.81'	171.15'	S 65°04'14" E	27°30'12"
C2	440.00'	175.72'	174.56'	S 11°25'26" W	22°52'55"

FINAL FOR DEVELOPMENT
DEC 09 2021

SHEET NUMBER
C2.4

Job No. 21-128
Date: 2021 11-16
Drawn By: JLH
Checked By: RS

Overall Site Plan

The Roberts Apartments at TM

Madison, AL

PREPARED FOR: Rohdie Group

ALABAMA REGISTERED PROFESSIONAL ENGINEER
November 16, 2021

MULLINS, LLC
CIVIL ENGINEERING, DEVELOPMENT DESIGN
SURVEYING, LANDSCAPE ARCHITECTURE
2101 West Clinton Avenue, Suite 503, Huntsville, AL 35805
(256) 690-5312

All documents, including Drawings and Bid Specifications, prepared or furnished by Firms listed on face, are instruments of service in respect of the client and firms listed on face, shall retain an ownership and property interest therein whether or not the Project is completed. Such documents are not intended to represented to be suitable for reuse by the Client or others on extensions of the Project or on any other project. Any reuse without written verification by Firms listed on face will entitle Firms listed on face to further compensation at rates to be agreed upon by Firms listed on face and the Client.

REVISIONS
Date: ---
Date: ---
Date: ---
Date: ---
Date: ---
Date: ---
Date: ---
Date: ---
Date: ---

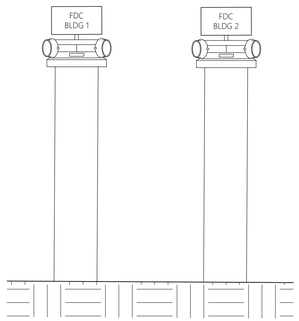

FDC w/ Sign Detail
NOT to Scale

Notes:

1. All service lines shall be stubbed & capped within 5' of buildings for plumbing tie-in.
2. Private hydrants shall be silver in color.
3. Connection to existing water main to be provided and installed by Developer.
4. Class 1 comnination automatic standpipe shall be required in stairways for 4 story buildings.
5. Elevator/Emergency Knox Boxes required.
6. IFC 2015 510.1 Emergency responder radio coverage in new buildings. All new buildings shall have approved radio coverage for emergency responders within the building based upon the exisiting coverage levels of the public safety communication systems of the jurisdiciton at the exterior of the building. This section shall not require improvement of the existing public safety communication systems.
7. Fire vault valves are required to be electronically tampered.

Water Legend:

- 8" Domestic Line
- 2" Domestic Service Line
- 6" Sprinkler Line

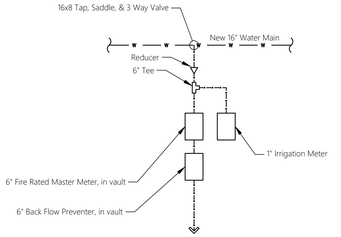

Utility Meter Detail
NOT to Scale

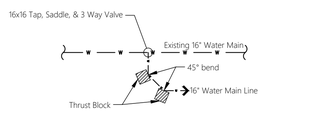

Utility Branch Detail
NOT to Scale

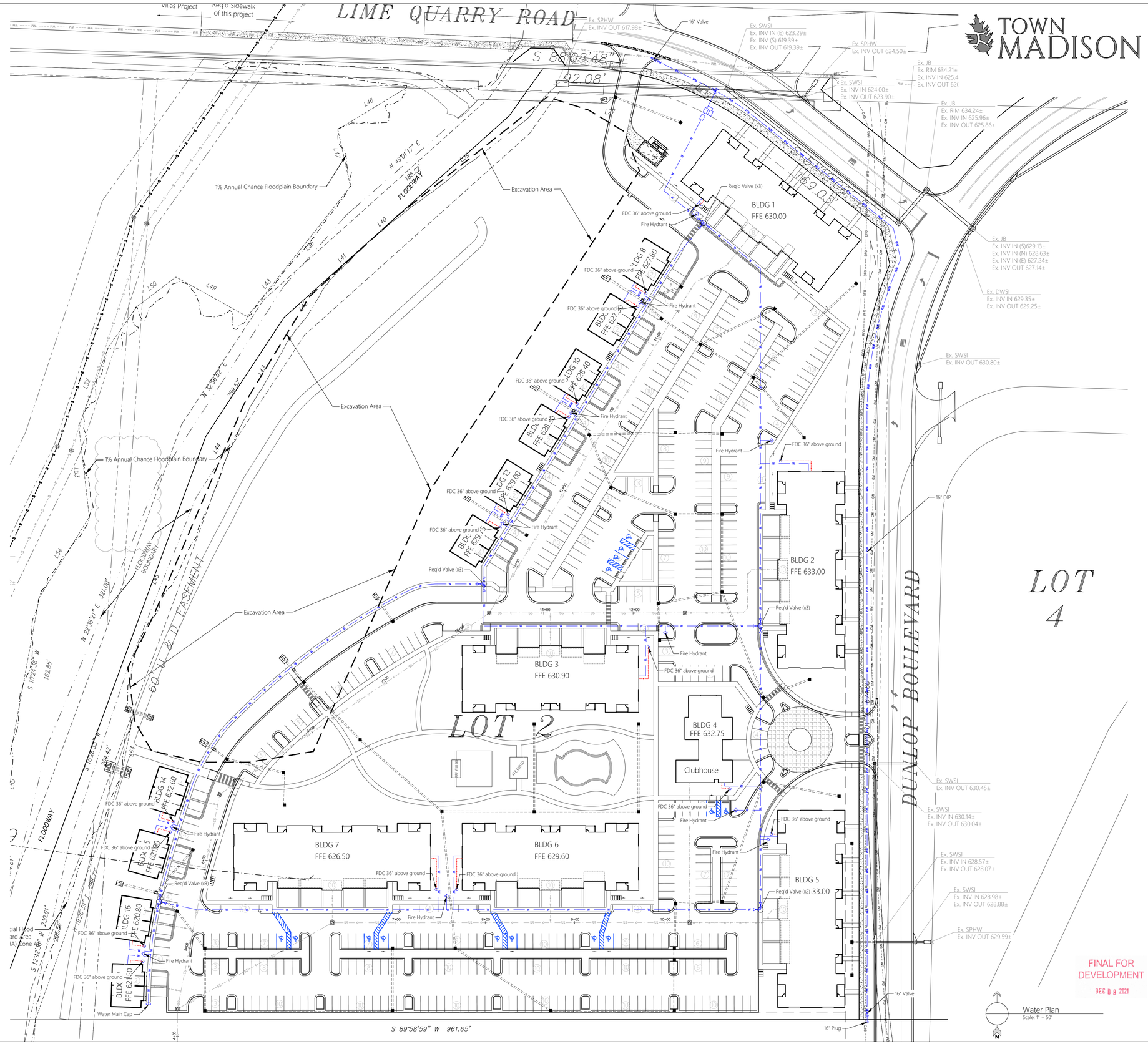

Water Plan
Scale: 1" = 50'

FINAL FOR DEVELOPMENT
DEC 09 2021

TOWN MADISON

REVISIONS
Date: ---
Date: ---
Date: ---
Date: ---
Date: ---
Date: ---
Date: ---
Date: ---
Date: ---

All documents, including Drawings and Bid Specifications, prepared or furnished by Firms listed on face, are instruments of service in respect of the client and firms listed on face, shall retain an ownership and property interest therein whether or not the Project is completed. Such documents are not intended to represented to be suitable for reuse by the Client or others on extensions of the Project or on any other project. Any reuse without written verification by Firms listed on face will entitle Firms listed on face to further compensation at rates to be agreed upon by Firms listed on face and the Client.

MULLINS, LLC
CIVIL ENGINEERING, DEVELOPMENT DESIGN
SURVEYING, LANDSCAPE ARCHITECTURE
2101 West Clinton Avenue, Suite 503, Huntsville, AL 35805
(256) 690-5312

ALABAMA REGISTERED PROFESSIONAL ENGINEER
November 16, 2021

The Roberts Apartments at TM
Madison, AL

PREPARED FOR: ---

Water Infrastructure Plan

Job No. 21-128
Date: 2021 11-16
Drawn By: JLH
Checked By: RS

SHEET NUMBER
C3

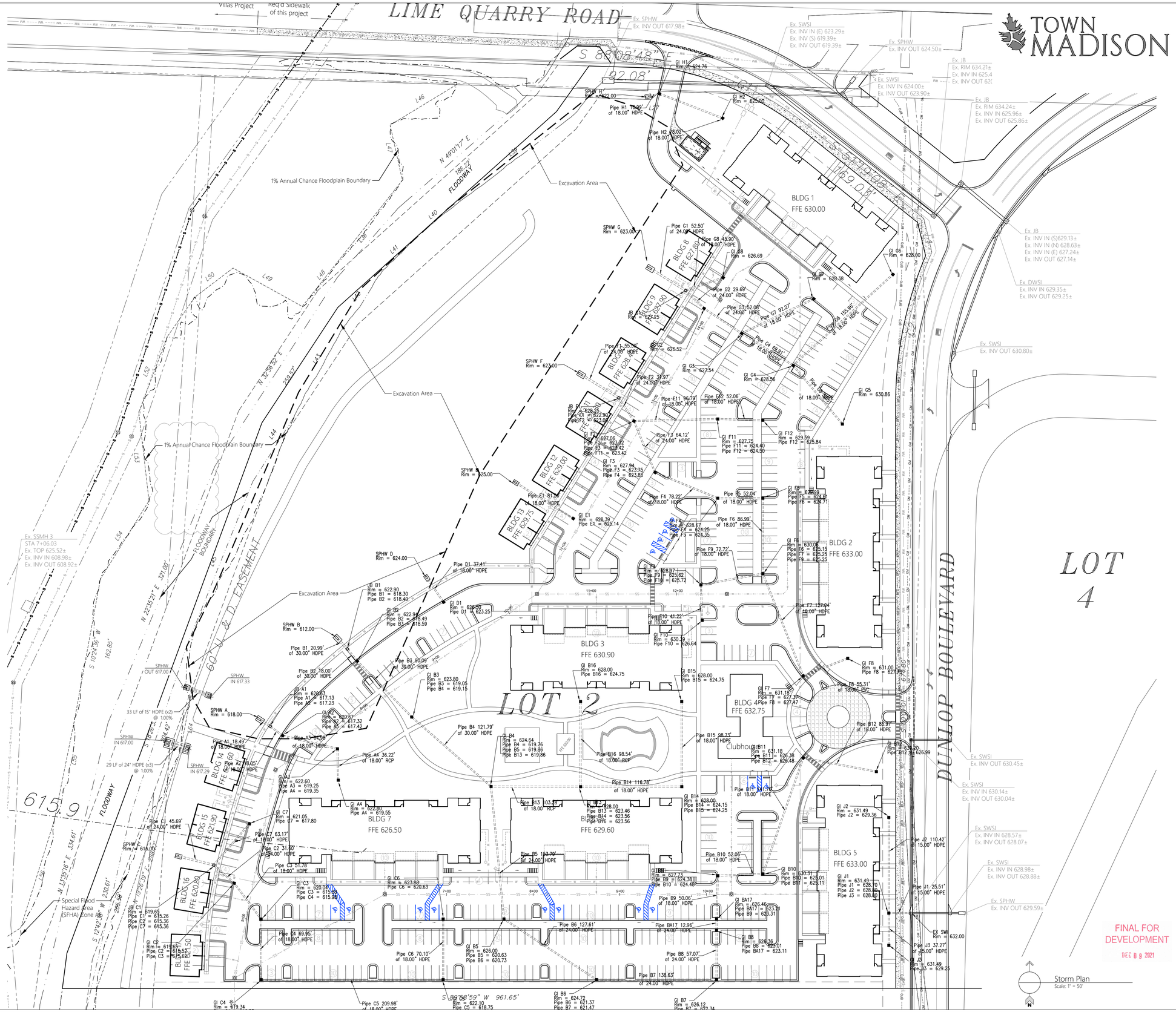

TOWN MADISON

REVISIONS

Date: ---
Date: ---
Date: ---
Date: ---
Date: ---
Date: ---
Date: ---
Date: ---
Date: ---

All documents, including Drawings and Bid Specifications, prepared or furnished by Firms listed on face, are instruments of service in respect of the client and firms listed on face, shall retain an ownership and property interest therein whether or not the Project is completed. Such documents are not intended to represented to be suitable for reuse by the Client or others on extensions of the Project or on any other project. Any reuse without written verification by Firms listed on face will entitle Firms listed on face to further compensation at rates to be agreed upon by Firms listed on face and the Client.

MULLINS, LLC
CIVIL ENGINEERING, DEVELOPMENT DESIGN
SURVEYING, LANDSCAPE ARCHITECTURE
2101 West Clinton Avenue, Suite 503, Huntsville, AL 35805
(256) 690-5312

ALABAMA REGISTERED PROFESSIONAL ENGINEER MICHAEL A. MULLINS
November 16, 2021

The Roberts Apartments at TM

Madison, AL

PREPARED FOR: ---

Storm Infrastructure Plan

Job No. 21-128
Date: 2021 11-16
Drawn By: JLH
Checked By: RS

SHEET NUMBER

C4.1

TOWN MADISON

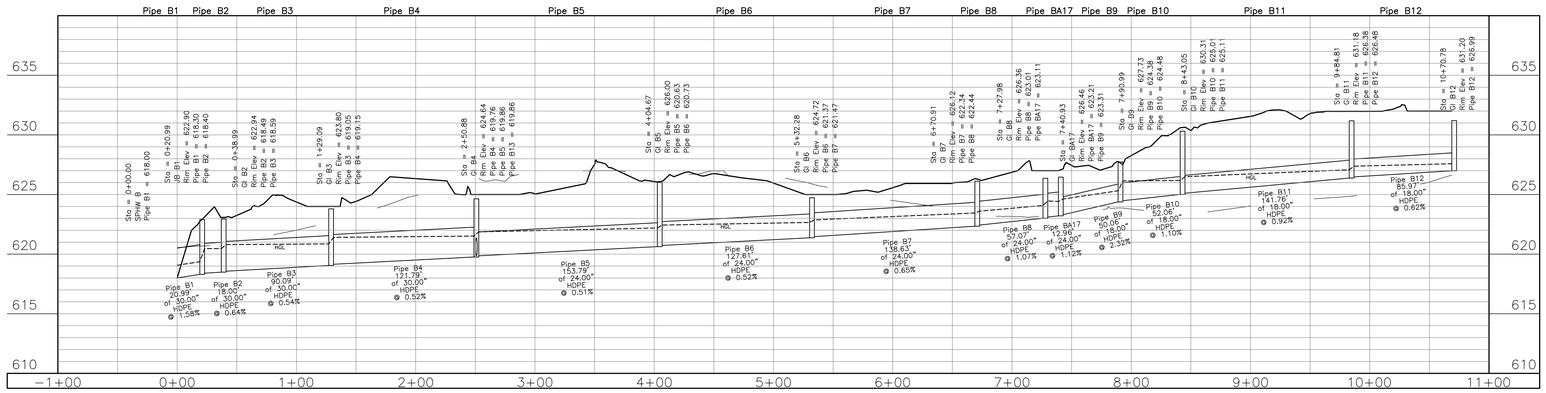

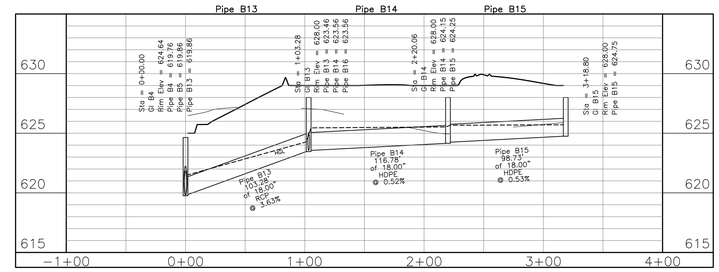

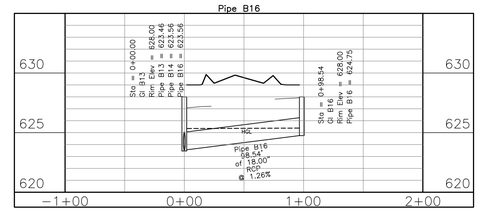

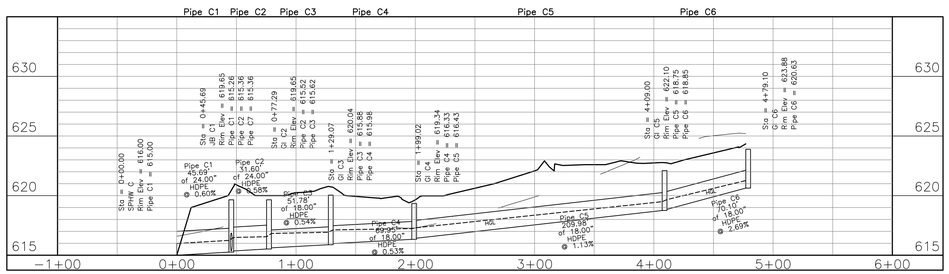

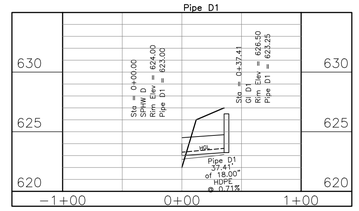

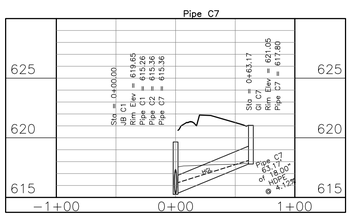

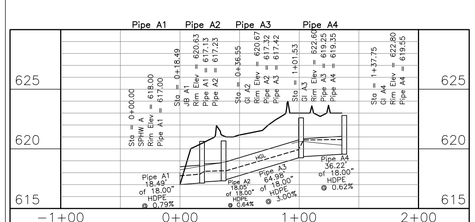

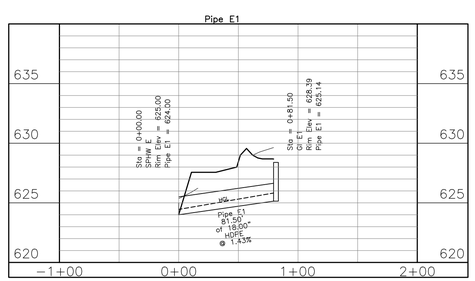

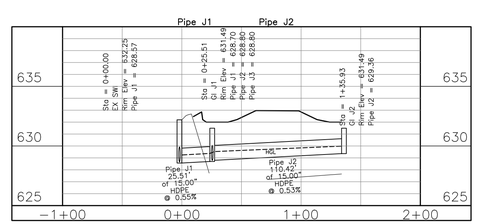

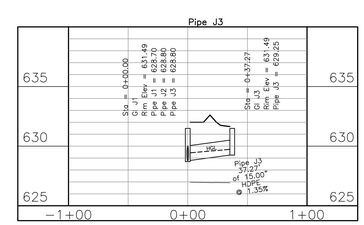

FINAL FOR DEVELOPMENT
DEC 09 2021

Storm Profiles
Horizontal Scale: 1" = 60'
Vertical Scale: 1" = 6'

REVISIONS
Date: ---
Date: ---
Date: ---
Date: ---
Date: ---
Date: ---
Date: ---
Date: ---
Date: ---
Date: ---

All documents, including Drawings and Bid Specifications, prepared or furnished by Firms listed on face, are instruments of service in respect of the client and firms listed on face, shall retain an ownership and property interest therein whether or not the Project is completed. Such documents are not intended to represented to be suitable for reuse by the Client or others on extensions of the Project or on any other project. Any reuse without written verification by Firms listed on face will entitle Firms listed on face to further compensation at rates to be agreed upon by Firms listed on face and the Client.

MULLINS, LLC
CIVIL ENGINEERING, DEVELOPMENT DESIGN
SURVEYING, LANDSCAPE ARCHITECTURE
2101 West Clinton Avenue, Suite 503, Huntsville, AL 35805
(256) 690-5312

ALABAMA REGISTERED PROFESSIONAL ENGINEER RYAN SEVIER MULLINS
November 16, 2021

The Roberts Apartments at TM

Madison, AL

PREPARED FOR: ---

Storm Infrastructure Profiles

Job No. 21-128
Date: 2021 11-16
Drawn By: JLH
Checked By: RS

SHEET NUMBER
C4.2

TOWN MADISON

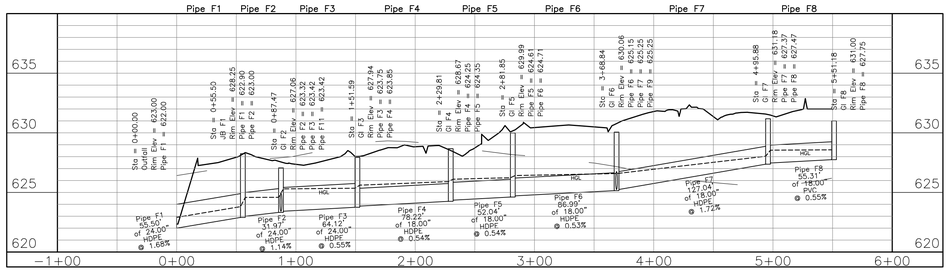

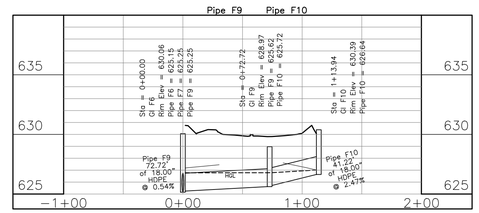

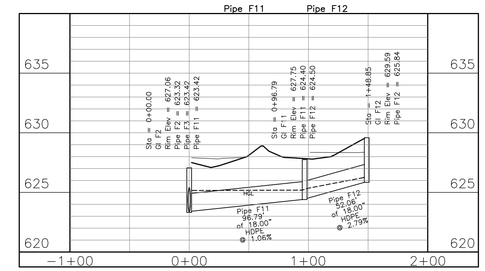

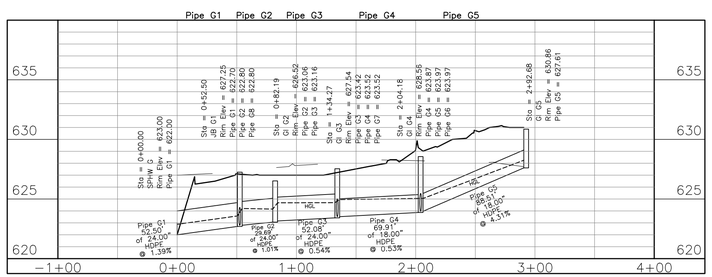

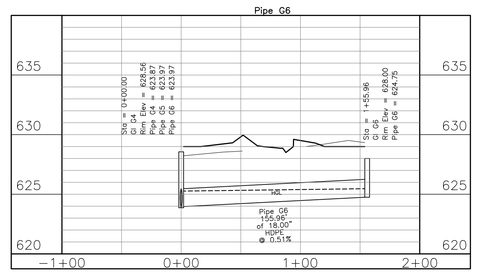

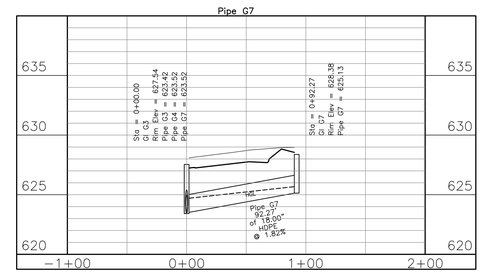

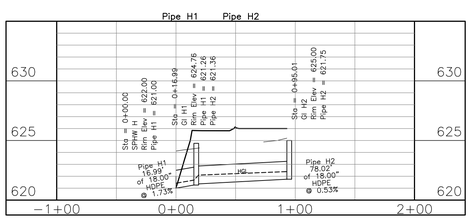

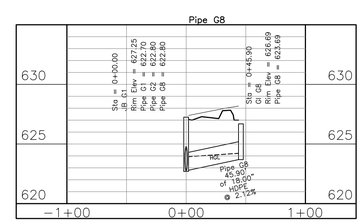

FINAL FOR DEVELOPMENT
DEC 09 2021

Storm Profiles
Horizontal Scale: 1" = 60'
Vertical Scale: 1" = 6'

REVISIONS
Date: ---
Date: ---
Date: ---
Date: ---
Date: ---
Date: ---
Date: ---
Date: ---
Date: ---
Date: ---

All documents, including Drawings and Bid Specifications, prepared or furnished by Firms listed on face, are instruments of service in respect of the client and firms listed on face, shall retain an ownership and property interest therein whether or not the Project is completed. Such documents are not intended to represented to be suitable for reuse by the Client or others on extensions of the Project or on any other project. Any reuse without written verification by Firms listed on face will entitle Firms listed on face to further compensation at rates to be agreed upon by Firms listed on face and the Client.

MULLINS, LLC
CIVIL ENGINEERING, DEVELOPMENT DESIGN
SURVEYING, LANDSCAPE ARCHITECTURE
2101 West Clinton Avenue, Suite 503, Huntsville, AL 35805
(256) 690-5312

ALABAMA REGISTERED PROFESSIONAL ENGINEER RICHARD SEVERS MULLINS
November 16, 2021

The Roberts Apartments at TM

Madison, AL

PREPARED FOR: ---

Storm Infrastructure Profiles

Job No. 21-128
Date: 2021 11-16
Drawn By: JLH
Checked By: RS

SHEET NUMBER
C4.3

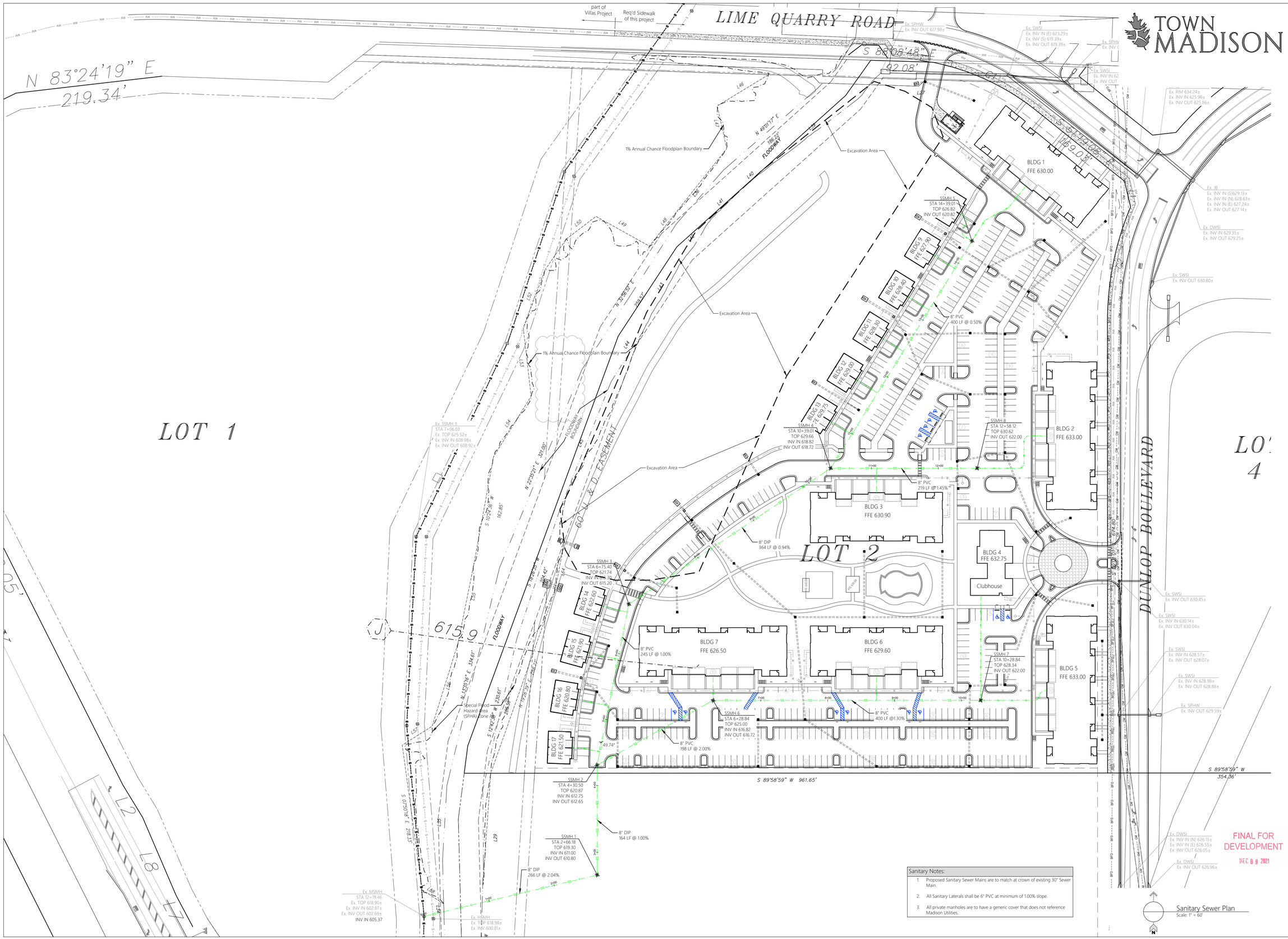

Sanitary Notes:

1. Proposed Sanitary Sewer Mains are to match at crown of existing 30" Sewer Main.
2. All Sanitary Laterals shall be 6" PVC at minimum of 1.00% slope.
3. All private manholes are to have a generic cover that does not reference Madison Utilities.

TOWN MADISON

REVISIONS

Date: ---
Date: ---
Date: ---
Date: ---
Date: ---
Date: ---
Date: ---
Date: ---

All documents, including Drawings and Bid Specifications, prepared or furnished by Firms listed on face, are instruments of service in respect of the client and firms listed on face, shall retain an ownership and property interest therein whether or not the Project is completed. Such documents are not intended to represented to be suitable for reuse by the Client or others on extensions of the Project or on any other project. Any reuse without written verification by Firms listed on face will entitle Firms listed on face to further compensation at rates to be agreed upon by Firms listed on face and the Client.

MULLINS, LLC
CIVIL ENGINEERING, DEVELOPMENT DESIGN
SURVEYING, LANDSCAPE ARCHITECTURE
2101 West Clinton Avenue, Suite 503, Huntsville, AL 35805
(256) 690-5312

ALABAMA REGISTERED PROFESSIONAL ENGINEER RYAN MULLINS
November 16, 2021

The Roberts Apartments at TM

Madison, AL

PREPARED FOR: ---

Sanitary Sewer Infrastructure Plan

Job No. 21-128
Date: 2021 11-16
Drawn By: JLH
Checked By: RS

SHEET NUMBER

C5

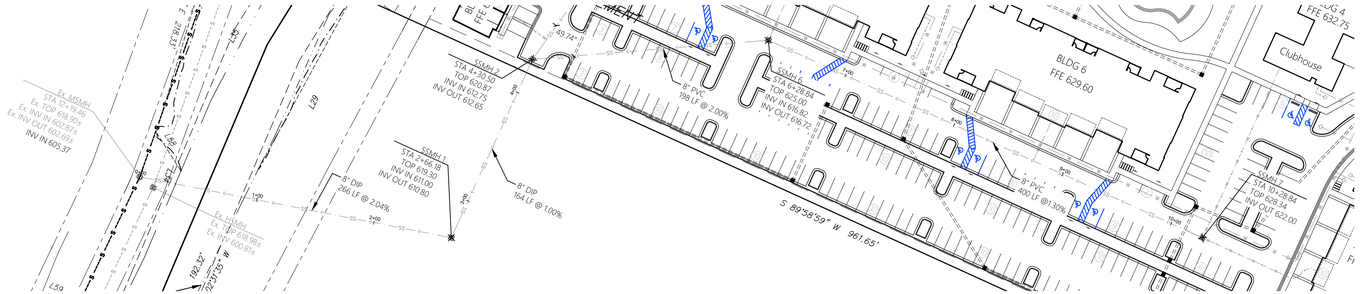

Sanitary Sewer Plan & Profile
Horizontal Scale: 1" = 60'
Vertical Scale: 1" = 12'

ALIGNMENT - Ex. MSMH TO SSMH 7

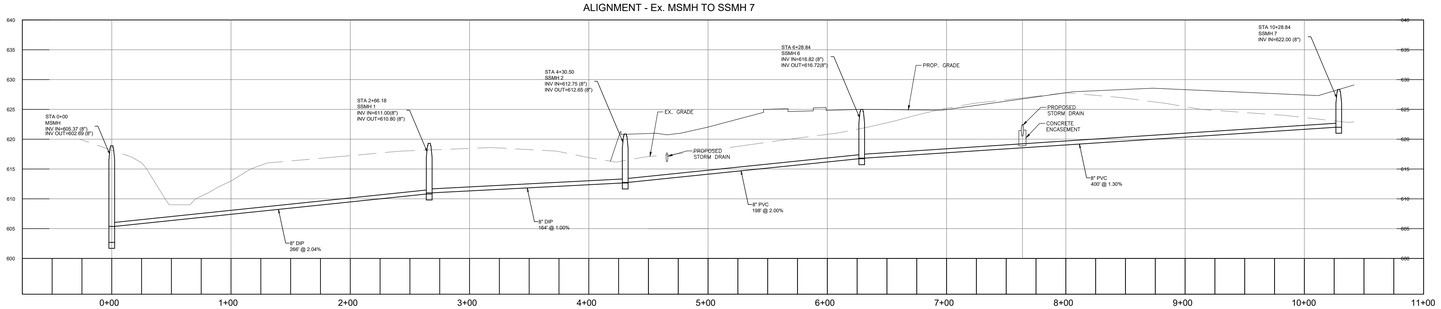

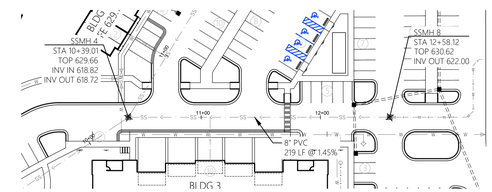

Sanitary Sewer Plan & Profile
Horizontal Scale: 1" = 60'
Vertical Scale: 1" = 12'

ALIGNMENT - SSMH 4 TO SSMH 8

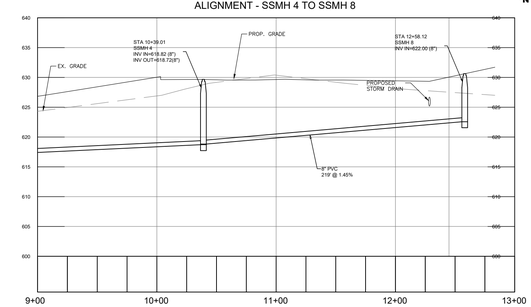

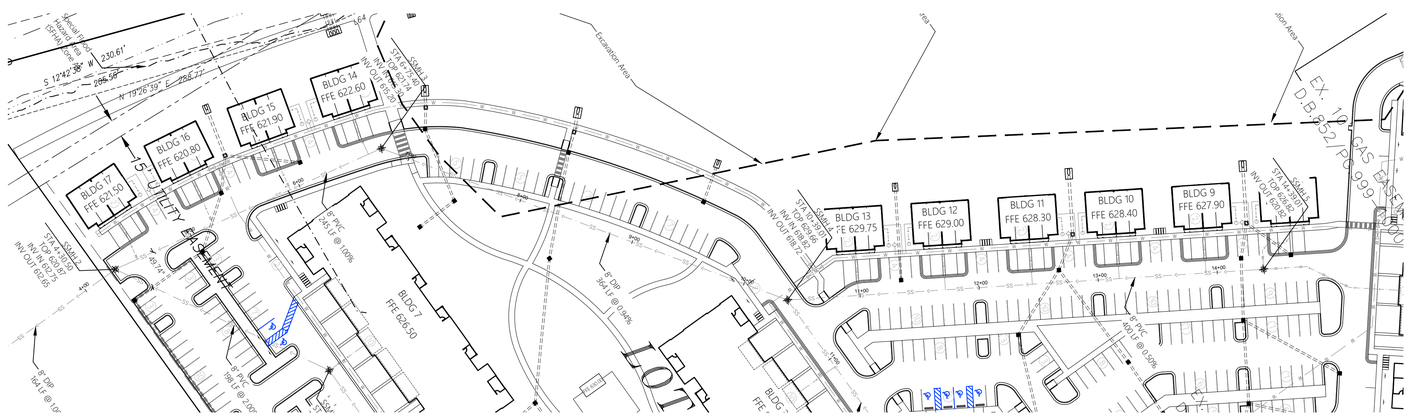

Sanitary Sewer Plan & Profile
Horizontal Scale: 1" = 60'
Vertical Scale: 1" = 12'

ALIGNMENT - SSMH 2 TO SSMH 5

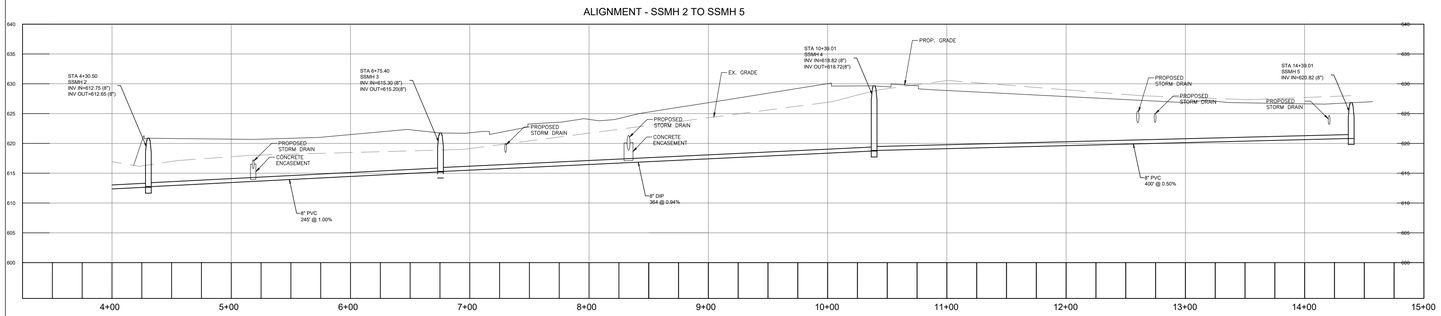

FINAL FOR DEVELOPMENT
DEC 8 9 2021

TOWN MADISON

REVISIONS
Date: ---
Date: ---
Date: ---
Date: ---
Date: ---
Date: ---
Date: ---
Date: ---
Date: ---
Date: ---

All documents, including Drawings and Bid Specifications, prepared or furnished by Firms listed on face, are instruments of service in respect of the client and firms listed on face, shall retain an ownership and property interest therein whether or not the Project is completed. Such documents are not intended to represented to be suitable for reuse by the Client or others on extensions of the Project or on any other project. Any reuse without written verification by Firms listed on face will entitle Firms listed on face to further compensation at rates to be agreed upon by Firms listed on face and the Client.

MULLINS, LLC
CIVIL ENGINEERING, DEVELOPMENT DESIGN
SURVEYING, LANDSCAPE ARCHITECTURE
2101 West Clinton Avenue, Suite 503, Huntsville, AL 35805
(256) 690-5312

ALABAMA REGISTERED PROFESSIONAL ENGINEER RICHARD SCOTT MULLINS
November 16, 2021

The Roberts Apartments at TM
Madison, AL

PREPARED FOR: ---

Sanitary Sewer Plan & Profile

Job No. 21-128
Date: 2021 11-16
Drawn By: JLH
Checked By: RS

SHEET NUMBER
C5.1

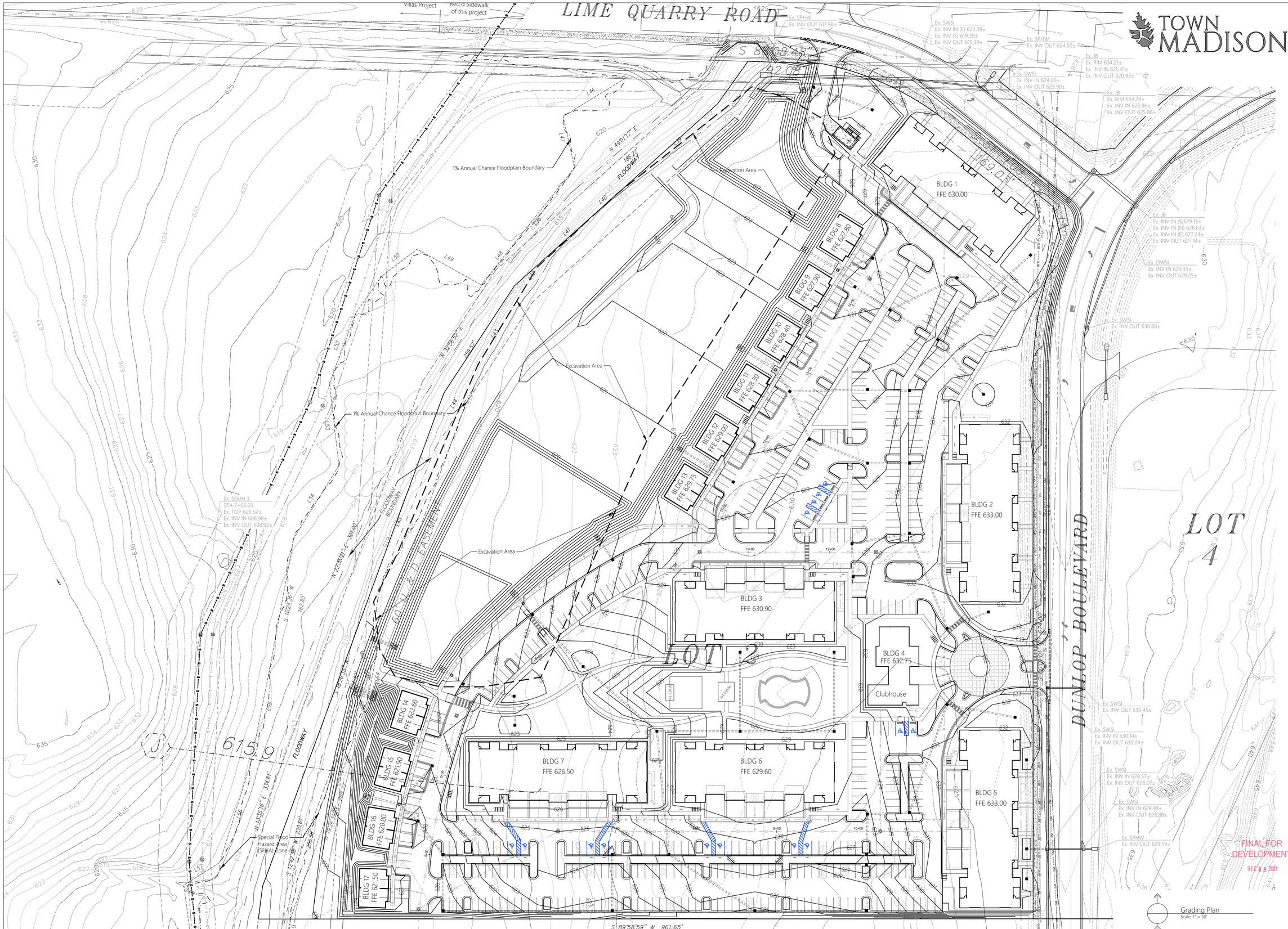

REVISIONS

Date: ---
Date: ---
Date: ---
Date: ---
Date: ---
Date: ---
Date: ---
Date: ---
Date: ---

All documents, including Drawings and Bid Specifications, prepared or furnished by Firms listed on face, are instruments of service in respect of the client and firms listed on face, shall retain an ownership and property interest therein whether or not the Project is completed. Such documents are not intended to be represented to be suitable for reuse by the Client or others on extensions of the Project or on any other project. Any reuse without written verification by Firms listed on face will entitle Firms listed on face to further compensation at rates to be agreed upon by Firms listed on face and the Client.

MULLINS, LLC
CIVIL ENGINEERING, DEVELOPMENT DESIGN
SURVEYING, LANDSCAPE ARCHITECTURE
2101 West Clinton Avenue, Suite 503, Huntsville, AL 35805
(256) 690-5312

ALABAMA REGISTERED PROFESSIONAL ENGINEER JAMES L. MULLINS
November 16, 2021

The Roberts Apartments at TM

Madison, AL

PREPARED FOR: ---

Overall Grading Plan

Job No. 21-128
Date: 2021 11-16
Drawn By: JLH
Checked By: RS

SHEET NUMBER

C6

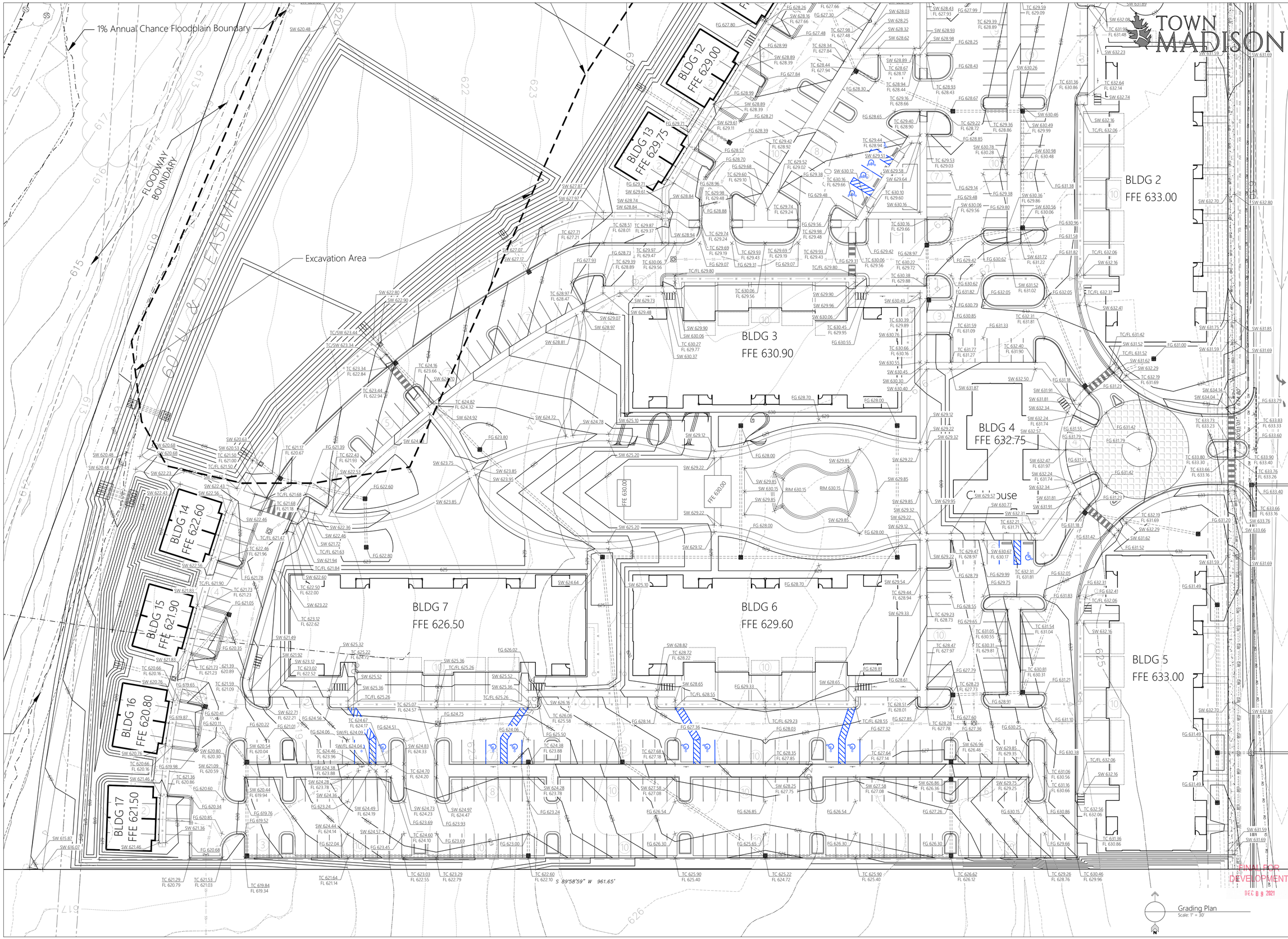

Grading Plan
Scale: 1" = 30'

TOWN MADISON

REVISIONS
Date: ---
Date: ---
Date: ---
Date: ---
Date: ---
Date: ---
Date: ---
Date: ---
Date: ---

All documents, including Drawings and Bid Specifications, prepared or furnished by Firms listed on face, are instruments of service in respect of the client and firms listed on face, shall retain an ownership and property interest therein whether or not the Project is completed. Such documents are not intended to represented to be suitable for reuse by the Client or others on extensions of the Project or on any other project. Any reuse without written verification by Firms listed on face will entitle Firms listed on face to further compensation at rates to be agreed upon by Firms listed on face and the Client.

MULLINS, LLC
CIVIL ENGINEERING, DEVELOPMENT DESIGN
SURVEYING, LANDSCAPE ARCHITECTURE
2101 West Clinton Avenue, Suite 503, Huntsville, AL 35805
(256) 690-5312

ALABAMA REGISTERED PROFESSIONAL ENGINEER JAMES L. MULLINS
November 16, 2021

The Roberts Apartments at TM

Madison, AL

PREPARED FOR: ---

Grading Plan

Job No. 21-128
Date: 2021 11-16
Drawn By: JLH
Checked By: RS

SHEET NUMBER

C6.1

TOWN MADISON

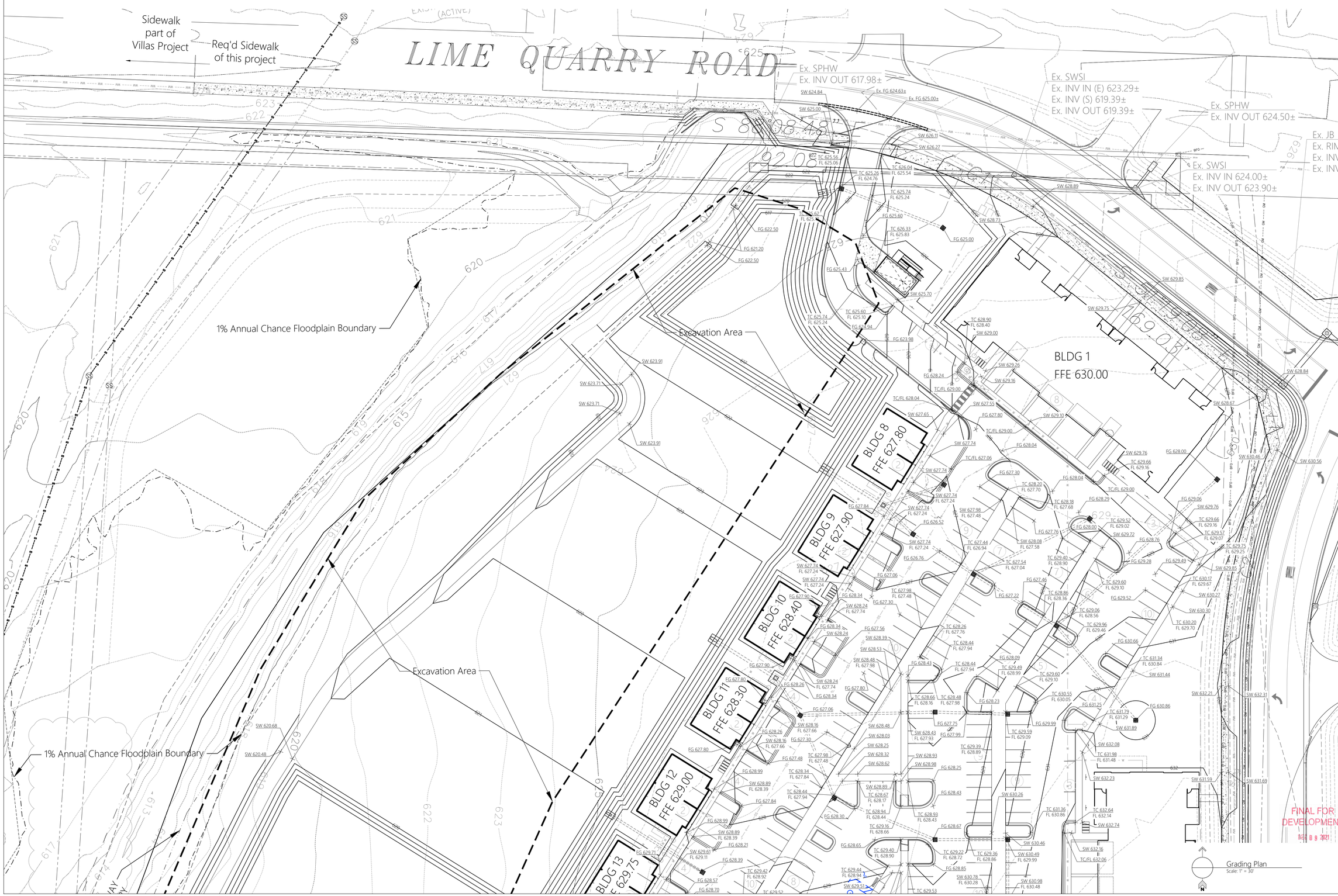

REVISIONS

Date: ---
Date: ---
Date: ---
Date: ---
Date: ---
Date: ---
Date: ---
Date: ---
Date: ---
Date: ---

All documents, including Drawings and Bid Specifications, prepared or furnished by Firms listed on face, are instruments of service in respect of the client and firms listed on face, shall retain an ownership and property interest therein whether or not the Project is completed. Such documents are not intended to represented to be suitable for reuse by the Client or others on extensions of the Project or on any other project. Any reuse without written verification by Firms listed on face will entitle Firms listed on face to further compensation at rates to be agreed upon by Firms listed on face and the Client.

MULLINS, LLC
CIVIL ENGINEERING, DEVELOPMENT DESIGN
SURVEYING, LANDSCAPE ARCHITECTURE
2101 West Clinton Avenue, Suite 503, Huntsville, AL 35805
(256) 690-5312

ALABAMA REGISTERED PROFESSIONAL ENGINEER JAMES L. MULLINS
November 16, 2021

The Roberts Apartments at TM

Madison, AL

PREPARED FOR: ---

Grading Plan

Job No. 21-128
Date: 2021 11-16
Drawn By: JLH
Checked By: RS

SHEET NUMBER

C6.2

Erosion Control Phasing:

THIS CONSTRUCTION SEQUENCE IS BASED ON THE ENGINEER'S OPINION AND NOT INTENDED TO BE A COMPREHENSIVE LIST OF EVENTS. THE CONTRACTOR SHOULD USE HIS/HER DISCRETION TO DETERMINE THE BEST SEQUENCE OF CONSTRUCTION. IN ADDITION, ALL EROSION AND SEDIMENTATION CONTROL MEASURES MUST BE INSTALLED PRIOR TO SELECT WORK ITEMS OR AT THE POINT OF COMPLETION OF EACH WORK ITEM, DEPENDING ON THE NATURE OF THE ITEM. EXAMPLE: SEDIMENT CONTROL PRIOR TO GRADING AND INLET PROTECTION UPON COMPLETION OF INLET CONSTRUCTION.

PHASE 1 - PRE CONSTRUCTION

1. INSTALL SILT FENCE AND CONSTRUCTION ENTRANCE AS SHOWN AND OTHER AREAS TO PREVENT SEDIMENT FROM BEING WASHED ON TO ADJOINING PROPERLY.

PHASE 2 - DEMOLITION, SITE PREPARATION AND GRADING

1. PROTECT EXISTING VEGETATION BUFFER ALONG EXISTING PROPERTY BOUNDARY.
2. INSTALL SILT FENCE AS SHOWN AND OTHER AREAS TO PREVENT SEDIMENT FROM BEING WASHED FROM THE SITE.
3. INSTALL WATTLE CHECK DAMS IN DITCHES & CONCENTRATED DRAINAGE WAYS TO PREVENT SEDIMENT FROM BEING WASHED DOWNSTREAM.
4. PERFORM SITE PREPARATION, DEMOLITION, AND CLEAR AND GRUB THE SITE.
5. INSTALL UTILITIES AND UNDERGROUND-RELATED IMPROVEMENTS.
6. GRADING ACCORDING TO THE GRADING PLAN; INSTALL FILTER AT DRAINAGE FLUMES AND LEAVE EXISTING DRAINAGE WAYS IN PLACE.

PHASE 3

1. BEGIN FOUNDATION CONSTRUCTION AND OTHER BUILDING PREPARATIONS.
2. MAINTAIN ALL EROSION AND SEDIMENT CONTROL MEASURES, SUCH THAT THEY ARE PERFORMING THEIR FUNCTION PROPERLY, CLEAN OUT, SEDIMENT BUILD-UP WHEN FACILITIES REACH 50% CAPACITY; MAKE SURE THAT ADEQUATE DRAINAGE IS PROVIDED TO REDUCE RUNOFF ONTO EXISTING ROADS.
3. COMPLETE THE PLACEMENT OF AGGREGATE BASE TO MEET GRADE AND COMPACTION REQUIREMENTS, & COMPACTION TEST AFTER PASSING INSPECTION, THEN START ASPHALT PAVING.
4. INSTALL SIDEWALKS AND RELATED SITE IMPROVEMENTS.
5. CONTRACTOR SHOULD BLOW SEED AND STRAW ON ALL DISTURBED AREAS IN ORDER TO REDUCE EROSION. BARE GROUND AREAS SHOULD BE MINIMIZED DURING CONSTRUCTION.
6. CONTRACTOR SHOULD BE AWARE THAT EROSION MAY OCCUR IN AREAS THAT ARE UNPROTECTED ON THE CONSTRUCTION SITE. IF THE CONTRACTOR OBSERVES SEDIMENT ACCUMULATION OR EROSION PROBLEMS ON SITE, THEN THE CONTRACTOR MUST CONSULT WITH THE QCP TO DETERMINE THE NECESSARY MEASURES TO STOP SEDIMENTATION, SUCH AS SILT FENCES, WATTLE CHECK DAMS, ETC., AND THEN TAKE THE NECESSARY MEASURES TO STOP THE EROSION, SUCH AS SEED/MULCH, SOD, EROSION BLANKETS, ETC. AS DIRECTED BY THE QCP.

PHASE 4

1. SOLID SOD WILL BE UTILIZED IN ALL DISTURBED AREAS TO EXPEDITE VEGETATIVE COVER ON THE AREAS DISTURBED BY CONSTRUCTION. THE VEGETATIVE COVER WILL PREVENT LONG TERM EROSION OF THE SITE.
2. PERMANENT SEEDING WILL BE UTILIZED IN ANY OTHER DISTRUBED AREAS THAT DO NOT RECEIVE SOLID SOD. THE PERMANENT SEEDING WILL BE MAINTAINED AND WILL PREVENT SOIL EROSION.
3. FINAL STABILIZATION OF DISTURBED AREAS MUST, AT A MINIMUM, BE INITIATED IMMEDIATELY WHENEVER ANY CLEARING, GRADING, EXCAVATING OR OTHER EARTH DISTURBING ACTIVITIES HAVE PERMANENTLY CEASED ON ANY PORTION OF THE SITE. TEMPORARY, STABILIZATION OF DISTRUBED AREAS MUST BE INITIATED IMMEDIATELY WHENEVER WORK TOWARD PROJECT COMPLETION AND FINAL STABILIZATION OF ANY PRTION OF THE SITE HAS TEMPORARILY CEASED ON ANY PORTION OF THE SITE AND WILL NOT RESUME FOR A PERIOD EXCEEDING THIRTEEN (13) DAYS.
4. RIP RAP - NO STEEP DISTURBED SLOPES ARE ANTICIPATED BUT IF UNEXPECTED CONSTRUCITON ISSUES CREATE STEEPER DISTURB SLOPES, THEY WILL BE STABILIZED WITH RIP RAP TO PROTECT SOIL ON THE SLOPES FROM EROSION. THE RIP RAP WILL PROTECT THE SOIL FROM EROSION DUE TO CONCENTRATED RUNOFF. IT WILL BE USED TO STABILIZE SLOPES THAT ARE UNSTABLE DUE TO SEEPAGE. IT IS ALSO USED TO SLOW THE VELOCITY OF CONCENTRATED RUNOFF WHICH IN TURN INCREASES THE POTENTIAL FOR INFILTRATION.
5. STORM WATER DETENTION BASIN MUST BE MAINTAINED AFTER CONSTRUCTION AND REGULAR USAGE, REPLANT REES, GRASS, SHRUBS OR VINES WHERE NEEDED TO MAINTAIN ADEQUATE COVER FOR EROSION CONTROL MAINTAIN GRASS PLANTINGS WITH PERIODIC APPLICATIONS OF FERTILIZER AND MOWING. THE CITY OF MADISON ALSO REQUIRES THAT THESE DETENTION PONDS RETAIN THE 1.14 INCH, 24 HOUR STORM TO MIMIC THE PRE-DEVELOPMENT CONDITIONS OF PEAK DISCHARGE RATE AND DISCHARGE VOLUME. THIS WILL RETAIN AND SLOW DISCHARGE TO ALLOW SETTLEMENT, OR FILTERING, OF SEDIMENT AND DEBRIS PRIOR TO DISCHARGE INTO THE ADJACENT EXISTING GRASS DRAINAGE DITCH.

GRASS SWALES MUST BE MAINTAINED: INSPECT THE CHANNEL FOLLOWING STORM EVENTS BOTH DURING AND AFTER GRASS COVER IS ESTABLISHED; MAKE NEEDED REPAIRS IMMEDIATELY. ALSO, CHECK THE CHANNEL OUTLET AND ROAD CROSSING FOR BLOCKAGE, PONDING, SEDIMENT, AND BANK INSTABILITY, BREAKS AND ERODED AREAS; REMOVE ANY BLOCKAGE, AND MAKE REPAIRS IMMEDIATELY TO.

Erosion Control Notes:

1. EROSION CONTROL SHALL BE MAINTAINED AT ALL TIMES AND SHALL BE IN ACCORDANCE WITH ALABAMA'S BEST MANAGEMENT PRACTICES.
2. SILT FENCE SHALL BE PLACED IN ACCORDANCE WITH THE CITY OF MADISON STORMWATER MANAGEMENT MANUAL.
3. SILT FENCE IS REQUIRED WHERE NECESSARY TO PREVENT EROSION AND WASHING OF TOPSOIL INTO EXISTING WATERWAYS AND DRAINAGE DITCHES UNTIL TIME AS GRASS HAS BEEN FINALLY ESTABLISHED.
4. EROSION CONTROL IS REQUIRED AROUND INSTALLED STORM DRAINAGE INLETS AND BOXES AS SHOWN HEREON, UNTIL SUCH TIME AS GRASS HAS BEEN FIRMLY ESTABLISHED TO PREVENT TOPSOIL EROSION FROM WASHING INTO SAID INLETS.
5. 20" WATTLES SHALL BE USED AS TEMPORARY CHECK DAMS IN NEW AND EXISTING DRAINAGE DITCHES UNTIL SUCH TIME AS GRASS HAS BEEN FIRMLY ESTABLISHED TO PREVENT DITCHES FROM WASHING OUT.
6. AN ENTRANCE CONSTRUCTION PAD SHALL BE BUILT AT ALL EXITS FROM THIS CONSTRUCTION AREA TO EXISTING TRAVELED ROADWAYS IN ACCORDANCE WITH THE DETAILS SHOWN ON THESE PLANS.
7. THE CONTRACTOR IS REQUIRED TO SEED GRASS OR OTHERWISE STABILIZE ALL DISTURBED AREAS AS SHOWN AS SOON AS CONSTRUCTION HAS BEEN COMPLETED IN THE IMMEDIATE AREA.
8. THE CONTRACTOR IS REQUIRED TO INSURE THAT ALL RUNOFF FROM THE CONSTRUCTION SITE ONTO EXISTING AREAS HAVE BEEN ADEQUATELY TREATED BY THE USE OF EROSION CONTROL METHODS AS SHOWN HEREON.
9. ALL REAR YARD DITCHES MUST BE FULLY SODDED.
10. ALL R.O.W. MUST HAVE FULL STAND OF GRASS PRIOR TO FINAL INSPECTION.
11. ALL GRADED SLOPES SHALL BE GRADED TO A MAXIMUM SLOPE OF 4%.

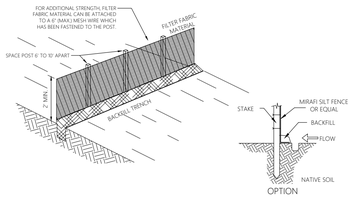

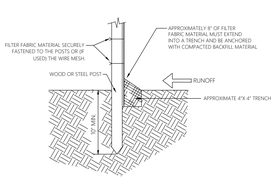

SILT FENCE
NOT to Scale

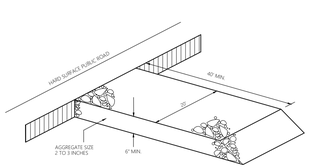

Gravel Construction Entrance
NOT to Scale

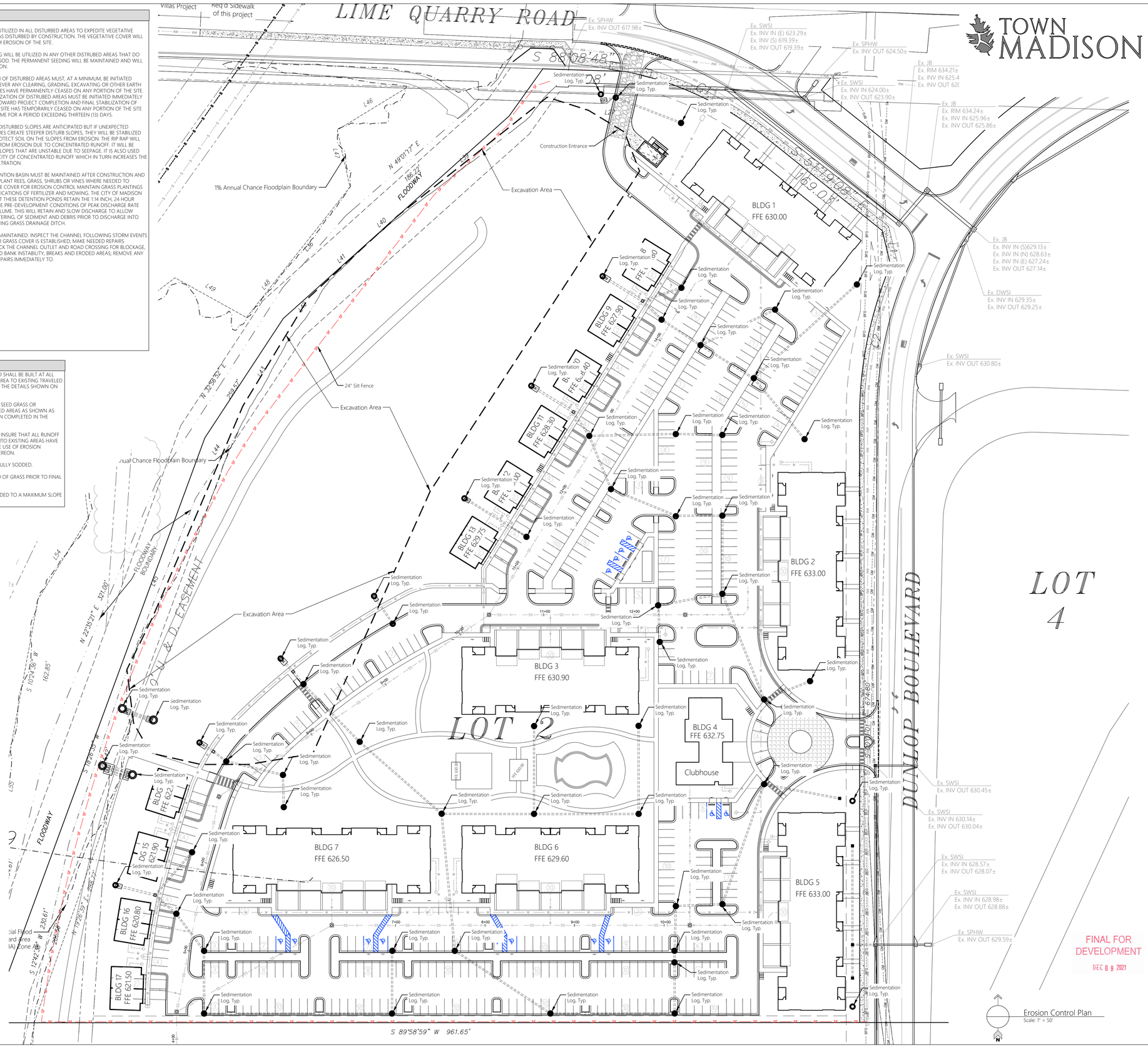

Erosion Control Plan
Scale: 1" = 50'

FINAL FOR DEVELOPMENT
DEC 09 2021

TOWN MADISON

REVISIONS
Date: ---
Date: ---
Date: ---
Date: ---
Date: ---
Date: ---
Date: ---
Date: ---

All documents, including Drawings and Bid Specifications, prepared or furnished by Firms listed on face, are instruments of service in respect of the client and firms listed on face, shall retain an ownership and property interest therein whether or not the Project is completed. Such documents are not intended to represented to be suitable for reuse by the Client or others on extensions of the Project or on any other project. Any reuse without written verification by Firms listed on face will entitle Firms listed on face to further compensation at rates to be agreed upon by Firms listed on face and the Client.

MULLINS, LLC
CIVIL ENGINEERING, DEVELOPMENT DESIGN
SURVEYING, LANDSCAPE ARCHITECTURE
2101 West Clinton Avenue, Suite 503, Huntsville, AL 35805
(256) 690-5312

ALABAMA REGISTERED PROFESSIONAL ENGINEER STEVEN A. MULLINS
November 16, 2021

The Roberts Apartments at TM

Madison, AL

PREPARED FOR: ---

Erosion Control Plan

Job No. 21-128
Date: 2021 11-16
Drawn By: JLH
Checked By: RS

SHEET NUMBER
C7

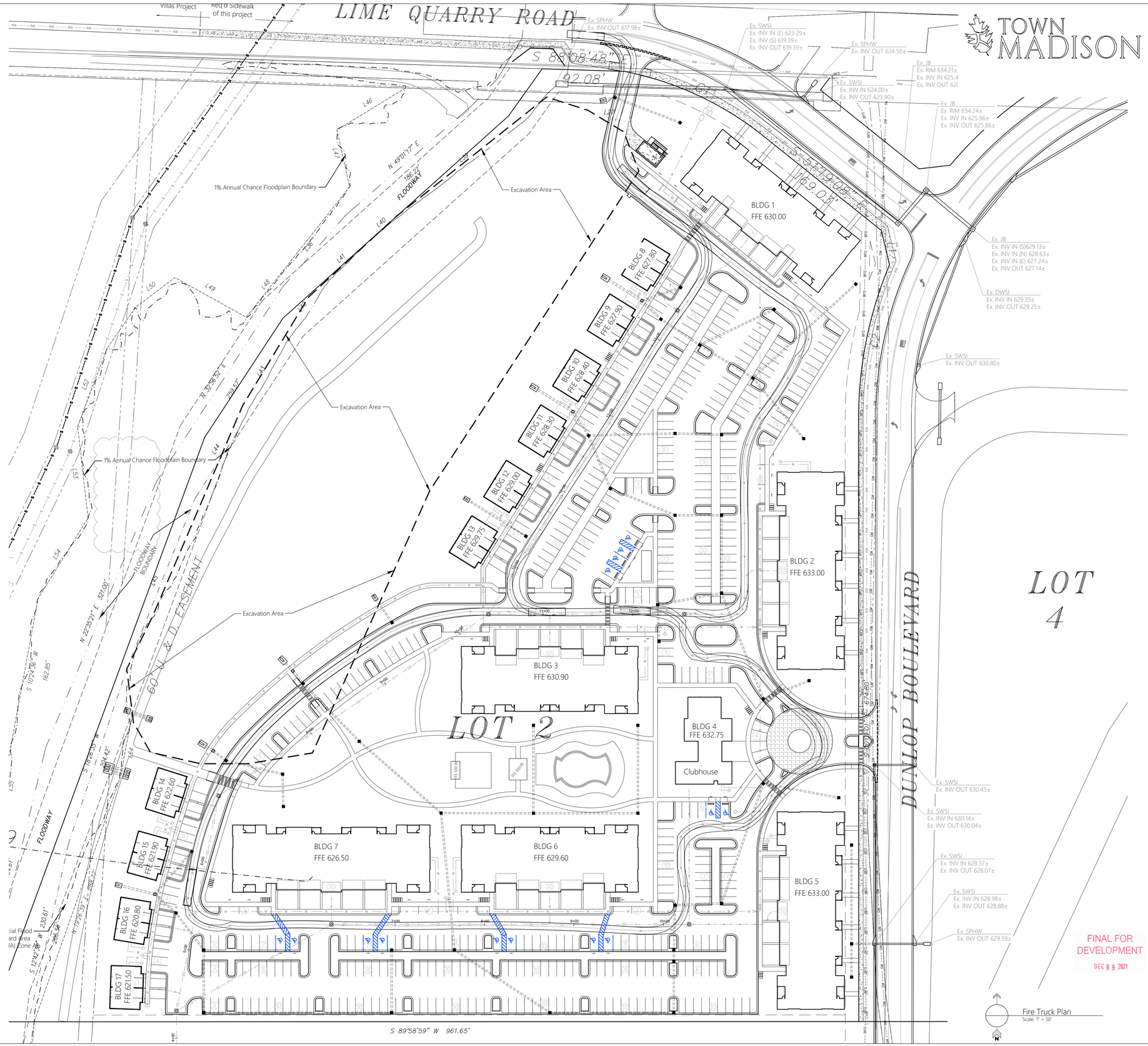

REVISIONS

Date: ---
Date: ---
Date: ---
Date: ---
Date: ---
Date: ---
Date: ---
Date: ---
Date: ---
Date: ---

All documents, including Drawings and Bid Specifications, prepared or furnished by Firms listed on face, are instruments of service in respect of the client and firms listed on face, shall retain an ownership and property interest therein whether or not the Project is completed. Such documents are not intended to represented to be suitable for reuse by the Client or others on extensions of the Project or on any other project. Any reuse without written verification by Firms listed on face will entitle Firms listed on face to further compensation at rates to be agreed upon by Firms listed on face and the Client.

MULLINS, LLC
CIVIL ENGINEERING, DEVELOPMENT DESIGN
SURVEYING, LANDSCAPE ARCHITECTURE
2101 West Clinton Avenue, Suite 503, Huntsville, AL 35805
(256) 690-5312

ALABAMA REGISTERED PROFESSIONAL ENGINEER STEVEN P. MULLINS
November 16, 2021

The Roberts Apartments at TM

Madison, AL

PREPARED FOR: ---

Fire Truck Access Plan

Job No. 21-128
Date: 2021 11-16
Drawn By: JLH
Checked By: RS

SHEET NUMBER

C8

TOWN MADISON

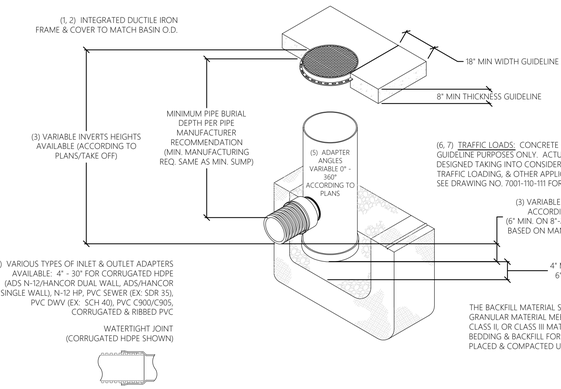

(6, 7) TRAFFIC LOADS; CONCRETE SLAB DIMENSIONS ARE FOR GUIDELINE PURPOSES ONLY. ACTUAL CONCRETE SLAB MUST BE DESIGNED TAKING INTO CONSIDERATION LOCAL SOIL CONDITIONS, TRAFFIC LOADING, & OTHER APPLICABLE DESIGN FACTORS. SEE DRAWING NO. 7001-110-111 FOR NON TRAFFIC INSTALLATION.

THE BACKFILL MATERIAL SHALL BE CRUSHED STONE OR OTHER GRANULAR MATERIAL MEETING THE REQUIREMENTS OF CLASS I, CLASS II, OR CLASS III MATERIAL AS DEFINED IN ASTM D2321. BEDDING & BACKFILL FOR SURFACE DRAINAGE INLETS SHALL BE PLACED & COMPACTED UNIFORMLY IN ACCORDANCE WITH ASTM D2321.

1 - 8" - 30" SOLID COVERS SHALL BE DUCTILE IRON PER ASTM A536 GRADE 70-50-05.
2 - 12" - 30" FRAMES SHALL BE DUCTILE IRON PER ASTM A536 GRADE 70-50-05. 8" & 10" SOLID COVERS FIT DIRECTLY ONTO DRAIN BASINS WITH THE USE OF A PVC BODY TOP. SEE DRAWING NO. 7001-110-045.
3 - DRAIN BASIN TO BE CUSTOM MANUFACTURED ACCORDING TO PLAN DETAILS. RISERS ARE NEEDED FOR BASINS OVER 84" DUE TO SHIPPING RESTRICTIONS. SEE DRAWING NO. 7001-110-065.
4 - DRAINAGE CONNECTION STUB JOINT TIGHTNESS SHALL CONFORM TO ASTM D3212 FOR CORRUGATED HDPE (ADS N-12/HANCOR DUAL WALL), N-12 HP, & PVC SEWER (4" - 24").
5 - ADAPTERS CAN BE MOUNTED ON ANY ANGLE 0° TO 360°. TO DETERMINE MINIMUM ANGLE BETWEEN ADAPTERS SEE DRAWING NO. 7001-110-012.
6 - 12" - 30" SOLID COVERS SHALL MEET H-20 LOAD RATING.
7 - 8" & 10" SOLID COVERS ARE RATED FOR LIGHT DUTY APPLICATIONS ONLY; NO CONCRETE COLLAR NEEDED FOR LIGHT DUTY RATING.

Nyloplast Junction-Box
NOT to Scale

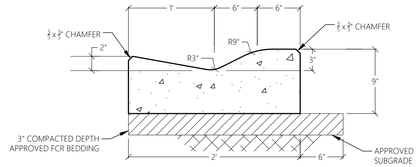

Fully Mountable Curb & Channel
NOT to Scale

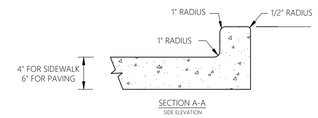

Concrete Integral Curb
NOT to Scale

TOP 6" OF SUBGRADE SHALL BE COMPACTED TO 100% PROCTOR DENSITY, BELOW 6" IS TO BE COMPACTED TO 95% PROCTOR DENSITY AS DETERMINED BY AASHTO T-99 COMPACTION TEST. SEE SPECIFICATIONS, FOR ADDITIONAL INFORMATION.

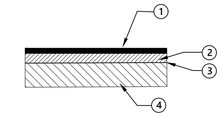

1. 112 LBS./S.Y. (1") HOT BITUMINOUS CONCRETE WEARING COURSE, ALDOT REF. 424-A, MIX 2 (SILICEOUS AGGREGATE)
2. 224 LBS./S.Y. (2") HOT BITUMINOUS CONCRETE BINDER COURSE, ALDOT REF. 414, MIX 1 OF SPECS.
3. 0.10 GAL./S.Y. EMULSIFIED ASPHALT OR 0.07 GAL./S.Y. TACK COAT. ALL MATERIALS ARE TO BE IN ACCORDANCE WITH SEC. 405 OF THE AL. DOT SPECIFICATIONS.
4. 5" LAYER OF DENSE GRADED LIMESTONE BASE COURSE. AL. DOT REF. 301 OF SPECS. ALL MATERIALS SHALL BE IN ACCORDANCE WITH SEC. 825, TYPE "B", COMPACTION TO 100% LVD.

Asphalt Paving Section
NOT to Scale

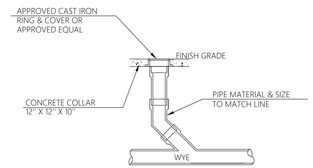

Clean-out
NOT to Scale

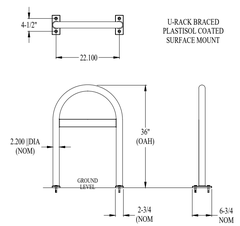

Arcat U-Rack "Braced' 2-Bike Rack Module
NOT to Scale

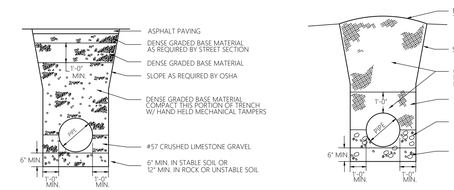

Storm Pipe Bedding
NOT to Scale

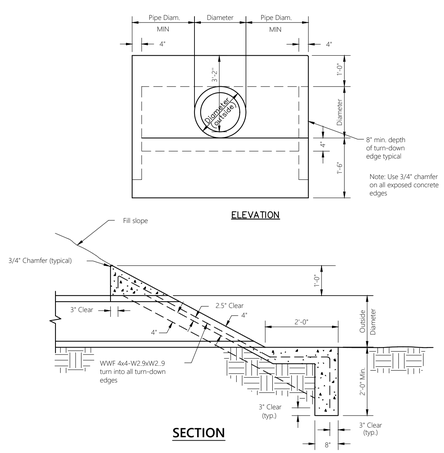

Concrete Sloped Paved Headwall
NOT to Scale

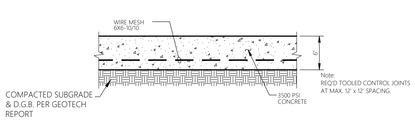

Concrete Paving
NOT to Scale

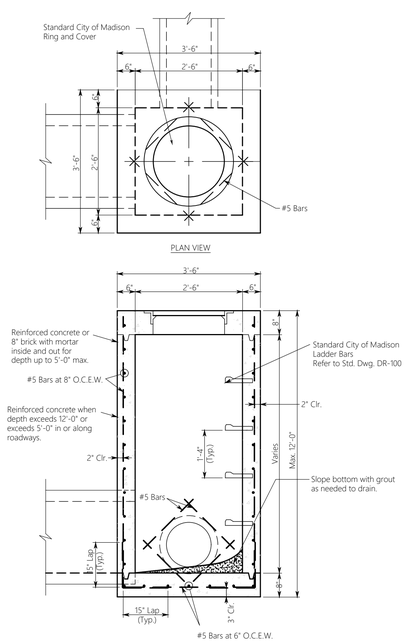

NOTES

1. All concrete shall be class "A" and shall develop a minimum compressive strength of 3000 PSI in 28 days.
2. Reinforcing shall be grade 60 deformed bars and shall conform to ASTM requirements.
3. Steps are required on all Junction Boxes when dimensions from bottom of top slab to top of bottom slab is greater than 4'-0".

Junction Box for 15" to 24" Pipes
NOT to Scale

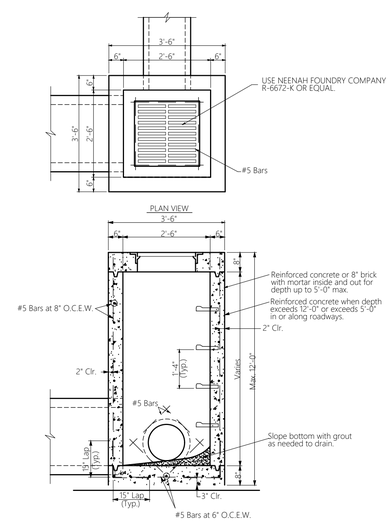

Inlet Box for 15" to 24" Pipes
NOT to Scale

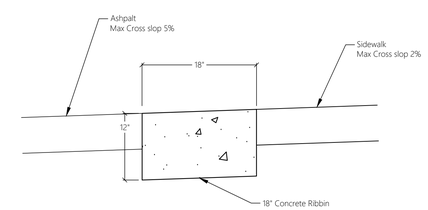

Concrete Ribbon
NOT to Scale

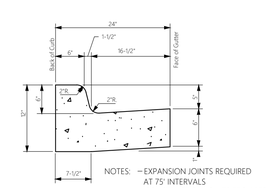

NOTES: – EXPANSION JOINTS REQUIRED AT 75' INTERVALS
– CONSTRUCTION JOINTS REQUIRED AT 25' INTERVALS
– 3000 p.s.i. CONCRETE

Concrete Curb & Gutter
NOT to Scale

FINAL FOR DEVELOPMENT
DEC 09 2021

REVISIONS
Date: ---
Date: ---
Date: ---
Date: ---
Date: ---
Date: ---
Date: ---
Date: ---
Date: ---

All documents, including Drawings and Bid Specifications, prepared or furnished by Firms listed on face, are instruments of service in respect of the client and firms listed on face, shall retain an ownership and property interest therein whether or not the Project is completed. Such documents are not intended to represented to be suitable for reuse by the Client or others on extensions of the Project or on any other project. Any reuse without written verification by Firms listed on face will entitle Firms listed on face to further compensation at rates to be agreed upon by Firms listed on face and the Client.

MULLINS, LLC
CIVIL ENGINEERING, DEVELOPMENT DESIGN
SURVEYING, LANDSCAPE ARCHITECTURE
2101 West Clinton Avenue, Suite 503, Huntsville, AL 35805
(256) 690-5312

ALABAMA REGISTERED PROFESSIONAL ENGINEER MICHAEL L. MULLINS
November 16, 2021

The Roberts Apartments at TM
Madison, AL

PREPARED FOR: ---

Civil Details

Job No. 21-128
Date: 2021 11-16
Drawn By: JLH
Checked By: RS

SHEET NUMBER
C9.1

TOWN MADISON

NOTES:
1. ENCASEMENT SHALL BE USED WHEN CLEARANCE BETWEEN SEWER LINE AND UTILITY PIPE IS 18" OR LESS.
2. "UTILITY PIPE" INCLUDES UNDERGROUND WATER, GAS, TELEPHONE, AND ELECTRICAL CONDUITS, STORM AND SANITARY SEWERS, ETC.

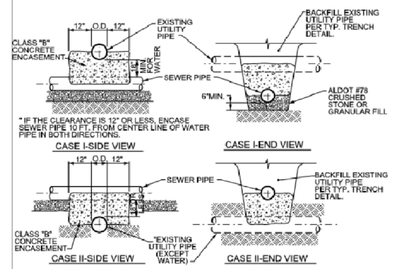

NOTES:
1. RELOCATION OF A UTILITY OTHER THAN CITY OF MADISON SEWERS WILL BE THE RESPONSIBILITY OF THAT UTILITY, HOWEVER, CONTRACTOR SHALL COORDINATE WITH OTHER UTILITIES.
2. SANITARY SEWER SHALL ALWAYS BE LOCATED BENEATH WATER LINES. WRITTEN APPROVAL SHALL BE REQUIRED FROM BOTH CITY ENGINEERING AND MADISON UTILITIES FOR A SANITARY SEWER LINE TO CROSS ABOVE A WATER LINE.
3. FOR STORM SEWER CROSSINGS, STEEL ENCASEMENT PIPE OR OTHER APPROVED METHOD IS REQUIRED WHEN SEPARATION BETWEEN STORM SEWER AND SANITARY SEWER LINES IS LESS THAN 24".

UTILITY CROSSING DETAILS
NOT TO SCALE

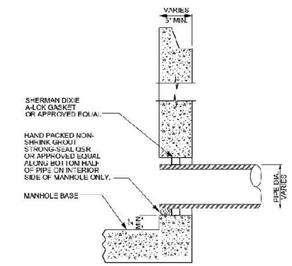

FLEXIBLE PIPE-TO-MANHOLE CONNECTOR DETAIL
NOT TO SCALE

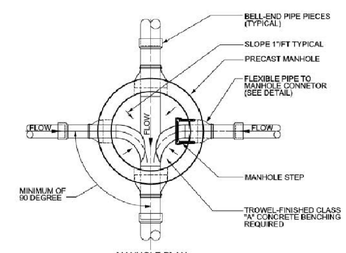

MANHOLE PLAN

MANHOLE INVERT DETAIL
NOT TO SCALE

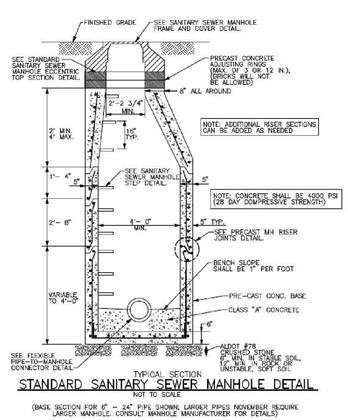

STANDARD SANITARY SEWER MANHOLE DETAIL
NOT TO SCALE

(BASE SECTION FOR 8" – 24" PIPE SHOWN. LARGER PIPES NOVEMBER REQUIRE LARGER MANHOLE. CONSULT MANHOLE MANUFACTURER FOR DETAILS)

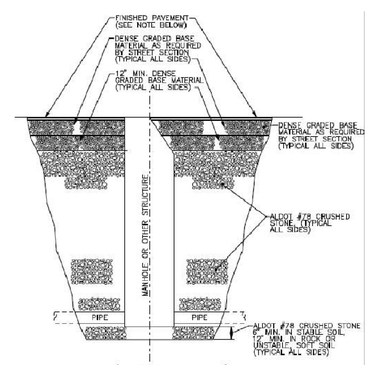

(OPTION NO. 1) BEDDING AND BACKFILL REQUIREMENTS AROUND MANHOLES AND OTHER DRAINAGE & SANITARY SEWER STRUCTURES WITHIN TRAFFIC AREAS
NOT TO SCALE

NOTE:
1. TRAFFIC AREAS SHALL EXTEND TO 5 FT BEYOND BACK OF CURB OR EDGE OF PAVEMENT, UNLESS OTHERWISE NOTED ON PLAN VIEW.
2. ASPHALT PAVING FOR STREETS SHALL MEET CURRENT CITY REQUIREMENTS.

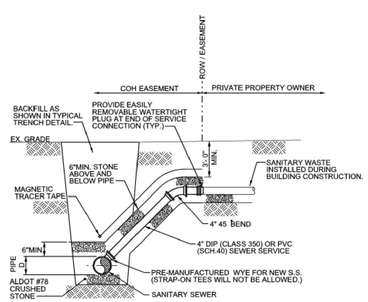

NOTES:
1. ALL PVC SERVICE LATERALS SHALL HAVE A CONTINUOUS STRIP OF METAL TRACER TAPE INSTALLED 2' - 3' BELOW FINISH GRADE FROM CENTERLINE OF SANITARY SEWER TO ROW/EASEMENT.
2. CURB MARKERS SHALL BE PROVIDED FOR SERVICE LATERALS. REFER TO SECTION 5 - DESIGN CRITERIA FOR SERVICE LATERALS.

SERVICE CONNECTION FOR DEEP SEWER (MORE THAN 6')
NOT TO SCALE

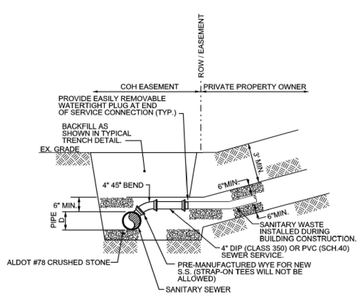

NOTES:
1. ALL PVC SERVICE LATERALS SHALL HAVE A CONTINUOUS STRIP OF METAL TRACER TAPE INSTALLED 2' - 3' BELOW FINISH GRADE FROM CENTERLINE OF SANITARY SEWER TO ROW/EASEMENT.
2. CURB MARKERS SHALL BE PROVIDED FOR SERVICE LATERALS. REFER TO SECTION 5 - DESIGN CRITERIA FOR SERVICE LATERALS.

SERVICE CONNECTION FOR SHALLOW SEWER (6' OR LESS)
NOT TO SCALE

FINAL FOR DEVELOPMENT
DEC 09 2021

REVISIONS
Date: ---
Date: ---
Date: ---
Date: ---
Date: ---
Date: ---
Date: ---
Date: ---

All documents, including Drawings and Bid Specifications, prepared or furnished by Firms listed on face, are instruments of service in respect of the client and firms listed on face, shall retain an ownership and property interest therein whether or not the Project is completed. Such documents are not intended to represented to be suitable for reuse by the Client or others on extensions of the Project or on any other project. Any reuse without written verification by Firms listed on face will entitle Firms listed on face to further compensation at rates to be agreed upon by Firms listed on face and the Client.

MULLINS, LLC
CIVIL ENGINEERING, DEVELOPMENT DESIGN
SURVEYING, LANDSCAPE ARCHITECTURE
2101 West Clinton Avenue, Suite 503, Huntsville, AL 35805
(256) 690-5312

ALABAMA REGISTERED PROFESSIONAL ENGINEER STEVEN R. MULLINS
November 16, 2021

The Roberts Apartments at TM
Madison, AL
PREPARED FOR: ---

Civil Details

Job No. 21-128
Date: 2021 11-16
Drawn By: JLH
Checked By: RS

SHEET NUMBER
C9.2

Irrigation Requirements:

1. Piping
   - 1.1. All irrigation main lines shall be SCH 40 PVC, sized as shown, and shall be buried a min. of 30" below finish grade and installed in trenches with proper identifying tape for in-field location.
   - 1.2. All irrigation laterals shall be Class 200 PVC and shall be buried a min. of 18" below finish grade.
   - 1.3. Funny pipe may be used for connection of spray head bodies or dripline to irrigation mains, however, individual funny pipe runs shall not exceed 6'.
   - 1.4. In all instances where irrigation piping crosses hardscape, irrigation piping shall be installed in a SCH 40 PVC sleeve sized a min. of 2 sizes larger than the largest pipe crossing hardscape.
   - 1.5. Common trenches may be used for main and lateral piping and wiring.
2. Valves
   - 2.1. System shall have a master valve as part of the controlled irrigation system in location as indicated on Landscape Plan.
   - 2.2. Master Valve shall be pressure-regulated such that output pressure is ~100 psi.
   - 2.3. All valves for this system shall be RainBird PESB model with PRS-D pressure regulation module, sized as appropriate for the individual zone for lateral lines or to match the main line for the master valve.
   - 2.4. System shall be zoned to such that beds and turf areas are not irrigated together, with proximate, similar areas zoned together to minimize zone/valve count, within reason. Zoning/valving shall be included in submitted design for approval by Landscape Architect, prior to beginning installation.
   - 2.5. All valves shall be fitted with RainBird decoders for communication with two-wire based controller system.
   - 2.6. All valves shall be installed in RainBird PVB standard or jumbo valve boxes, installed per manufacturer's details, specs, & requirements.
3. Landscape Bed Irrigation
   - 3.1. Landscape Bed zone valves shall be pressure-regulated such that dripline operates at ~40 psi.
   - 3.2. Landscape beds shall be irrigated by dripline tubing, RainBird model XFS. Dripline tubing may be installed at finish grade, below mulch, or just below finish grade.
   - 3.3. Shrubs and trees shall, at minimum, have 1 row of dripline along 2 sides of the plants, located generally above the rootball of the plant, as well as 1 row of dripline along 2 sides of the plants, located 1' outside the rootball for shrubs and 3' outside the rootball for trees.
4. Sod Area Irrigation
   - 4.1. Sod zone valves shall be pressure-regulated such that heads operate at ~40 psi.
   - 4.2. Sod areas shall be irrigated by spray nozzle, with pressure-regulating spray body. Spray bodies shall be Hunter Pro-Spray model PRS40 with MP Rotator spray nozzles.
   - 4.3. Nozzle selection shall be appropriate for throw radius and area shape.
   - 4.4. All spray heads shall be trained to minimize overspray onto all hardscape areas, buildings, fences, furnishings, etc.
5. Quick Couplers
   - 5.1. Contractor shall install a 1" RainBird quick coupler at each location indicated on Landscape Plan.
   - 5.2. Quick Couplers shall be piped off of Irrigation Mains.
   - 5.3. Quick Coupler shall be installed in RainBird PVB standard valve box, per manufacturer's details, specs, & requirements.
6. Controller
   - 6.1. Irrigation controller for this system shall be RainBird ESP-LXD two-wire decoder controller. Location as shown on Landscape Plan.
   - 6.2. Controller shall be mounted in appropriate RainBird stainless steel pedestal, per manufacturer's requirements and specifications.
   - 6.3. Contractor shall coordinate with Owner for any communication tie-in to Owner's overall property infrastructure management system.
7. Wiring & Grounding
   - 7.1. All valves shall be connected to the controller by two-wire product which meets or exceeds minimum requirements of controller manufacturer, using DBY connectors installed in gel-filled housing.
   - 7.2. Grounding, lightning arrestors, and other related fixtures shall be installed per controller manufacturer's details, specs, & requirements. Should the controller manufacturer require certification of grounding measures installation, contractor shall arrange for such inspection and make adjustments as required for certification. Landscape Architect shall be included in all correspondence and inspections.

Landscape/Irrigation Inspections:

1. Contractor shall coordinate with Landscape Architect at tree delivery for inspection by Landscape Architect and approval prior to unloading.
2. Contractor shall stake, identify, and/or prepare the following for approval by Landscape Architect prior to installation:
   - 2.1. Finish Grade
   - 2.2. Tree Locations
   - 2.3. Bed Lines
   - 2.4. Landscape Irrigation Main Line
   - 2.5. All Valve Boxes
   - 2.6. Quick Couplers
   - 2.7. Landscape Irrigation Controller

NOTE: Any plant materials that are damaged (by transport, handling, installation, or other construction activities) are rejected and shall be replaced at no cost or delay to the Owner.

Landscape Installation Notes:

1. All existing trees outside of the limits of work for this project shall be protected during the construction and installation of these improvements and are not to be damaged in any manner. Any damage to such shall be brought to the attention of the Landscape Architect immediately for determination of appropriate corrective measures, if any. Contractor shall execute said corrective measures at no additional cost to the Owner.
2. All areas to receive landscape plantings (trees, shrubs, sod, etc.) shall be backfilled with min. 12" of topsoil (from nearby stripped topsoil stockpiles) prior to plant material installation or mulching. Placed topsoil shall be worked to remove and/or break-up any large clumps of soil and shall be fine-graded in all areas for a smooth, consistent finish product. Any debris or deleterious materials within the 12" profile of landscape areas shall be removed prior to placing any topsoil Any debris, large roots, rocks, etc. shall be removed from the topsoil prior to finish-grading efforts.
3. Contractor shall stake tree locations and layout bed lines for approval by Landscape Architect prior to installation. Adjust staked locations and bed lines as directed.
4. All landscape materials are subject to approval of the Owner or Landscape Architect at any time during the job, up until point of acceptance.
5. All plants shall meet standards set forth by the American Standards for Nursery Stock.
6. Provide No. 1 grade or better nursery grown stock grown in an approved, recognized nursery in accordance with requirements of applicable standards as noted herein. Provide only healthy, vigorous, stock free of disease, insects, injuries, abrasions crown die-back or disfigurements.
7. All trees shall have a single, straight leader (co-dominate leaders are unacceptable) unless otherwise noted. Trees with narrow crotches of included bark, split bark with inrolled callus, dead, broken, or flush-cut branches will not be accepted. Rootballs shall be firm, neat, slightly tapered and well burlapped. Trees with loose or broken rootballs at time of planting shall be rejected. All trees indicated as B&B/WB in plant schedule shall be balled and burlapped and set in wire basket at time of digging at nursery.
8. Plant material transported in open vehicles / trailers is damaged and subject to rejection.
9. Any rejected plants shall be removed from the site and replaced by acceptable plants meeting drawings notes & specifications at no additional cost to the owner.
10. All plant material, upon delivery to site shall be immediately planted in prepared and prior-approved beds and pits. If contractor is unable to plant within 2 hours of plant delivery to site, plants shall be heeled in, the roots kept moist, and plants otherwise protected and maintained until installation at no cost to the owner.
11. All plant material shall be handled by the container or rootball and not by the top growth.
12. Plants injured on job site are not acceptable and shall be replaced by contractor at no additional cost to the owner.
13. All plant material shall be warranted by Landscape Contractor for a period of one year after final acceptance. Dead or declining plant material shall be rejected and shall be replaced by Landscape Contractor at no cost to the owner. It is the Contractor's responsibility to contact the Owner at the end of the warranty period. If the Contractor fails to notify and meet with the Owner, the warranty period shall continue until the meeting is held, dead or declining plant material is replaced, and the project is accepted by the Owner.
14. Trees shall be staked with ArborTie product, min. three (3) per tree, per manufacturer's requirements and recommendations. Tree staking shall be removed from established plants at the end of the warranty period.
15. Mulch for trees and shrub beds shall be pine straw, installed to 3" settled thickness. Mulch shall extend min. 4' around trees.
16. All trees shall be purchased from the following supplier list, all subject to approval & pre-selection by Owner and/or Landscape Architect:

Hunter Trees	Alpine, AL	(866) 348-6837
Select Trees	Bishop, GA	(706) 743-5124
Bold Spring Nursery	Hawkinsville, GA	(478) 783-4975

17. Finish grade shall be approved by Landscape Architect and Owner's representative. All weeds shall be sprayed and removed prior to planting, seeding, and/or sodding.
18. All disturbed areas within the project's property and associated ROW shall be fully treated by either:
    - 18.1. Solid sod shall be planted with Tifton Bermuda over raked and fine-graded finish grade. Full, consistent stand of turf shall be established in all areas designated, prior to landscape acceptance.
    - 18.2. Landscape Bed area, mulched per notes.
19. Ex. turf areas shall be protected as much as is practicable. Any turf areas damaged as part of this work shall be repaired/replaced to match surrounding at no cost to the owner.
20. Contractor shall arrange for landscape inspection with Landscape Architect upon completion of installation for final acceptance.

Landscape Design Notes:

Plantings shown on this plan are required as part of the City of Madison's Zoning Ordinance. The plantings shall be installed prior to project Certificate of Occupancy.

This project is expected to have a full landscape design and implementation which will be handled by contractor direction and/or Supplemental Landscape Plan. Such plantings are not required by the Municipality and are, therefore, not subject to review/approval by such and are not included herein.

Contractor is to coordinate with Owner/Engineer/Landscape Architect to include such plantings in any pricing/bids put forth on this project.

Grand Avenue Site Furnishings:

The following are required at each location indicated:

1. 4' x 12' x 4" thk Conc. Pad
2. Bench -- "Harpo" as manufactured by LandscapeForms 69" length with aluminum slats
3. Litter Receptacle -- "Poe" as manufactured by LandscapeForms

Both bench and receptacle shall be installed per manufacturer's requirements and recommendations, mounted to concrete pad.

Plant List

Key	Scientific name	Common Name	Min. Size	Condition	Notes
Trees					
ARB	*Acer rubrum 'Brandywine'*	Brandywine Red Maple	3.5" Caliper	B&B / WB	Full & Matched
LSF	*Lagerstroemia x 'Sarah's Favorite'*	Sarah's Favorite Crape Myrtle	12' Height	B&B / WB	3- or 5-cane Only, Full & Matched
MVG	*Magnolia virginiana 'Australis'*	Australis Bay Magnolia	3.5" Caliper	B&B / WB	3- or 5-cane Only, Full & Matched
QLR	*Quercus lyrata 'QLR510' P.P.A.F*	Resilience Overcup Oak	3.5" Caliper	B&B / WB	Full & Matched
QTN	*Quercus nuttallii 'QNSTD' P.P. #16,254*	Sangria Nuttall Oak	3.5" Caliper	B&B / WB	Full & Matched
UAP	*Ulmus americana 'Princeton'*	Princeton American Elm	3.5" Caliper	B&B / WB	Full & Matched
Shrubs					
JGC	*Juniperus x pfitzeriana 'Aurea Improved'*	Gold Coast Juniper	5 Gal. and 18" hgt.	Container	Full & Matched
LES	*Loropetalum chinense 'Shang-white'*	Emerald Snow Loropetalum	5 Gal. and 18" hgt.	Container	Full & Matched
LRD	*Loropetalum chinense 'Shang-Red'*	Red Diamond Loropetalum	7 Gal. and 36" hgt.	Container	Full & Matched
TGZ	*Cleyera japonica 'Conthery'*	Bronze Beauty Cleyera	7 Gal. and 36" hgt.	Container	Full & Matched
Decorative Grasses					
CSL	*Cortaderia selloana*	Selloa Pampasgrass	5 Gal. and 30" hgt.	Container	Full & Matched
MSA	*Miscanthus sinensis 'Adagio'*	Adagio Fountain Grass	5 Gal. and 24" hgt.	Container	Full & Matched
MCL	*Muhlenbergia capillaris 'Lenca'*	Royal Mist Pink Muhly Grass	3 Gal. and 18" hgt.	Container	Full & Matched
MLL	*Muhlenbergia lindheimeri 'Leni'*	Autumn Glow Muhly Grass	3 Gal. and 18" hgt.	Container	Full & Matched

STATE OF ALABAMA
HARRY MATHIS SNEED
NUMBER 690
PROFESSIONAL LANDSCAPE ARCHITECT
Nov 17, 2021

Req'd PVA Landscape Calculations:

Grand Avenue		
Total Length	733 LF	
Req'd Trees	9	(1 tree / 50 LF)
Provided Trees	9	
Perimeter		
Total Length	979 LF	
Req'd Trees	20	(1 tree / 50 LF)
Req'd Shrubs	120	(6 shrubs / 50 LF)
Provided Trees	20	
Provided Shrubs	120	
Interior		
Req'd LS Area	8,352 sf	(464 spaces x 18 sf)
Req'd Trees	42	(1 tree / 200 sf)
Req'd Shrubs	168	(4 shrubs / 200 sf)
Provided LS Area	8,500+ sf	
Provided Trees	42	
Provided Shrubs	172	

FINAL FOR DEVELOPMENT
DEC 09 2021

REVISIONS
Date: ---
Date: ---
Date: ---
Date: ---
Date: ---
Date: ---
Date: ---
Date: ---

All documents, including Drawings and Bid Specifications, prepared or furnished by Firms listed on face, are instruments of service in respect of the client and firms listed on face, shall retain an ownership and property interest therein whether or not the Project is completed. Such documents are not intended to represented to be suitable for reuse by the Client or others on extensions of the Project or on any other project. Any reuse without written verification by Firms listed on face will entitle Firms listed on face to further compensation at rates to be agreed upon by Firms listed on face and the Client.

MULLINS, LLC
CIVIL ENGINEERING, DEVELOPMENT DESIGN
SURVEYING, LANDSCAPE ARCHITECTURE
2101 West Clinton Avenue, Suite 503, Huntsville, AL 35805
(256) 690-5312

The Roberts Apartments at Town Madison

Madison, AL

PREPARED FOR: Rohdie Group

PVA Landscape Plan

Job No. 21-128
Date: 2021 11/17
Drawn By: HMS
Checked By: HMS

SHEET NUMBER
L1

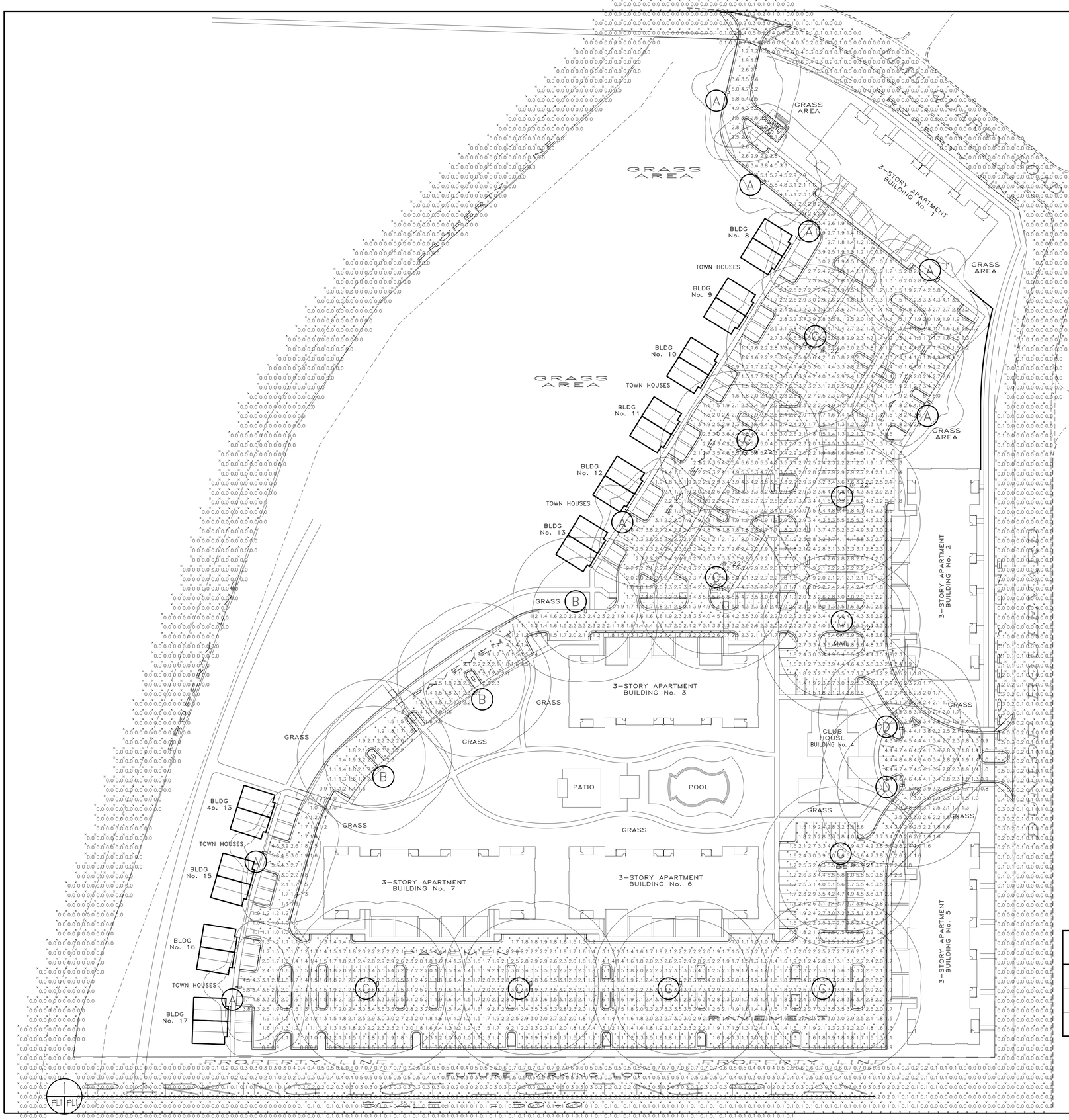

LIGHTING NOTES

1. VERIFY EXACT LOCATIONS WITH OWNER'S REPRESENATIVE BEFORE ROUGHING IN.
2. CONTRACTOR SHALL CHECK ALL LIGHTING FIXTURES FOR EXACT MOUNTING TYPE AND SPACE REQUIRED BEFORE ROUGHING IN.
3. ELECTRICAL CONTRACTOR SHALL WORK CLOSELY WITH THE OWNER'S REPRESENTATIVE, TO VERIFY EXACT TYPE OF EQUIPMENT TO BE INSTALLED, AND THE DIMENSIONS WHICH MAY EFFECT THE EXACT PLACEMENT OF ELECTRICAL WORK.
4. FURNISH AND INSTALL LAMPS AS WITH FIXTURES.
5. ALL WORK SHALL BE IN COMPLIANCE WITH NFPA 70, AND THE CITY OF MADISON LIGHTING ORDINANCE REQUIREMENTS.

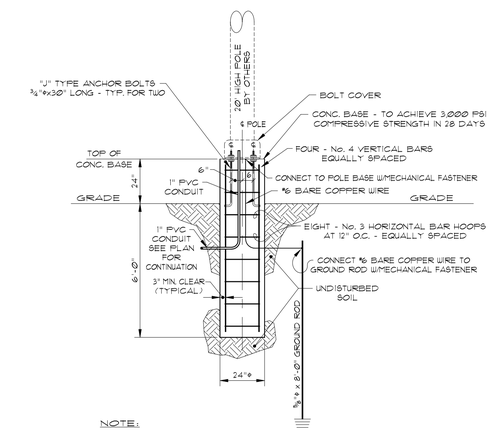

NOTE:
FACTORY SUPPLIED TEMPLATE MUST BE USED WHEN SETTING ANCHOR BOLTS.

2 PL1 PL1 TYPICAL POLE BASE DETAIL
NOT TO SCALE

LUMINAIRE SCHEDULE

Symbol	Label	Qty	Lum. Watts	Lum. Lumens	LLF	Arrangement	Description
	A	8	147	22020	0.95	SINGLE	RSX2-LED-P3-40K-R4-MVOLT-SPA-DDBXD Mounted on 25' Sq Steel Pole
	B	3	244	31073	0.95	SINGLE	RSX2-LED-P6-40K-R5-MVOLT-SPA-DDBXD Mounted on 25' Sq Steel Pole
	C	10	374	25667	0.95	SINGLE	RSX2-LED-P4-40K-R5-MVOLT-SPA-DDBXD Mounted on 25' Sq Steel Pole
	D	2	312	41525	0.95	SINGLE	RSX3-LED-P4-40K-R5-MVOLT-SPA-DDBXD Mounted on 25' Sq Steel Pole

CALCULATION SUMMARY

Label	CalcType	Units	Avg	Max	Min	Avg/Min	Max/Min
Parking and Driveways	Illuminance	Fc	2.5	6.1	0.8	3.1:1	7.6:1
Spillover	Illuminance	Fc	0.1	0.9	0.0	N.A.	N.A.

FINAL FOR DEVELOPMENT
DEC 09 2021

50' 0 50'
GRAPHIC SCALE: 1"=50'-0"
Sept 20, 2021 - 05:39:57

REVISIONS	BY

PROJECT TITLE:
ROBERTS APARTMENTS
INTER DUNLOP BLVD/LIME QUARRY
MADISON, ALABAMA

SHEET TITLE:
PARKING LOT LIGHTING
PLAN, NOTES AND LEGEND

STAMP
ALABAMA REGISTERED NO. 11037 PROFESSIONAL ENGINEER JOHN A. SNOW
9-20-2021

ASSOCIATED ENGINEERING SERVICES
HUNTSVILLE, ALABAMA

DATE SEP 2021
SCALE 1"=50'-0"
DRAWN N.A. Snow
JOB P-21135
SHEET PL-1
OF --- SHEETS

P135-PL1

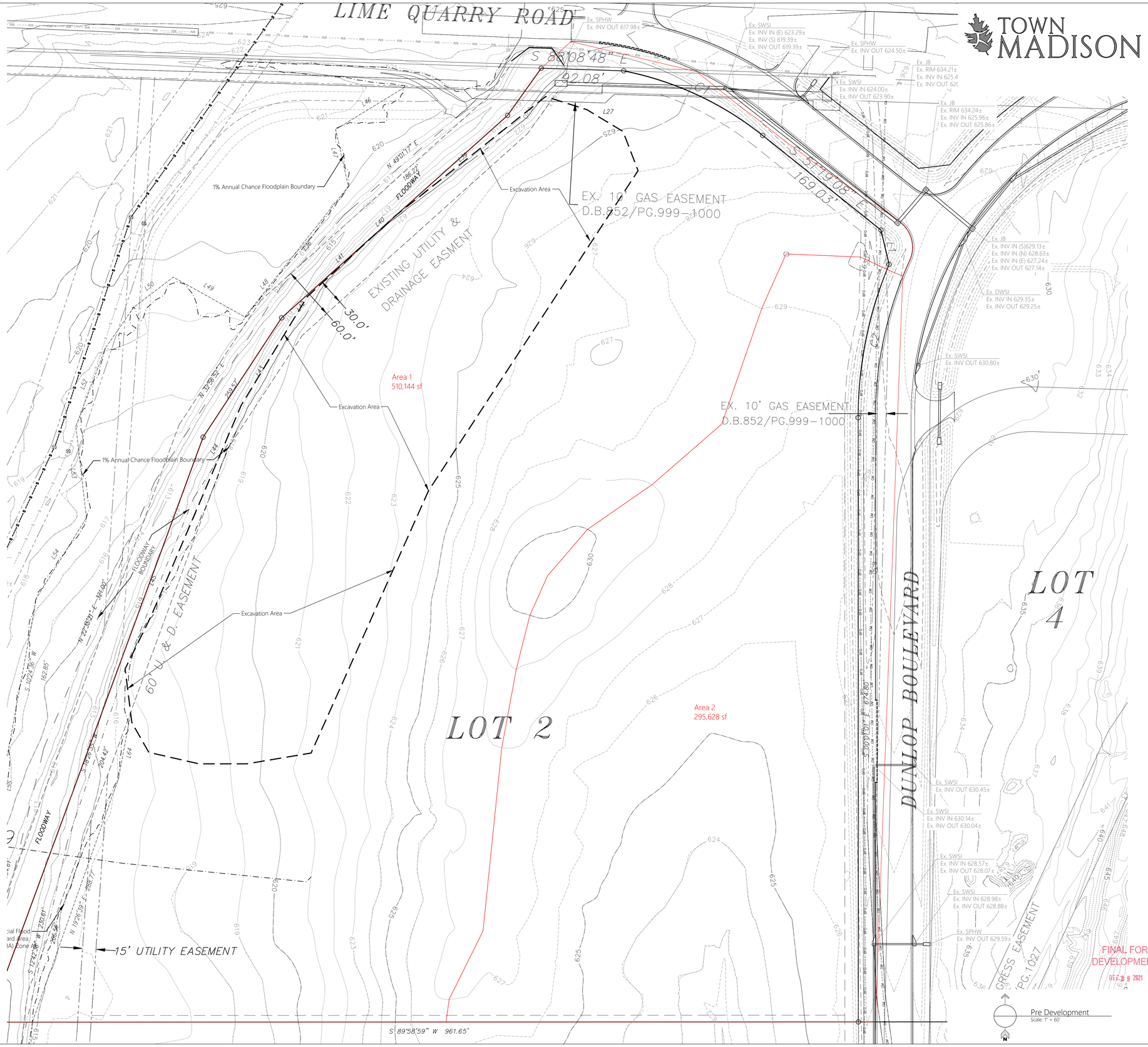

REVISIONS

Date: ---
Date: ---
Date: ---
Date: ---
Date: ---
Date: ---
Date: ---
Date: ---
Date: ---

All documents, including Drawings and Bid Specifications, prepared or furnished by Firms listed on face, are instruments of service in respect of the client and firms listed on face, shall retain an ownership and property interest therein whether or not the Project is completed. Such documents are not intended to represented to be suitable for reuse by the Client or others on extensions of the Project or on any other project. Any reuse without written verification by Firms listed on face will entitle Firms listed on face to further compensation at rates to be agreed upon by Firms listed on face and the Client.

MULLINS, LLC
CIVIL ENGINEERING, DEVELOPMENT DESIGN
SURVEYING, LANDSCAPE ARCHITECTURE
2101 West Clinton Avenue, Suite 503, Huntsville, AL 35805
(256) 690-5312

The Roberts Apartments at TM

Madison, AL

PREPARED FOR: ---

Pre Development Drainage Map

Job No.	19-177
Date:	2021 9-21
Drawn By:	JLH
Checked By:	RS

SHEET NUMBER

D1

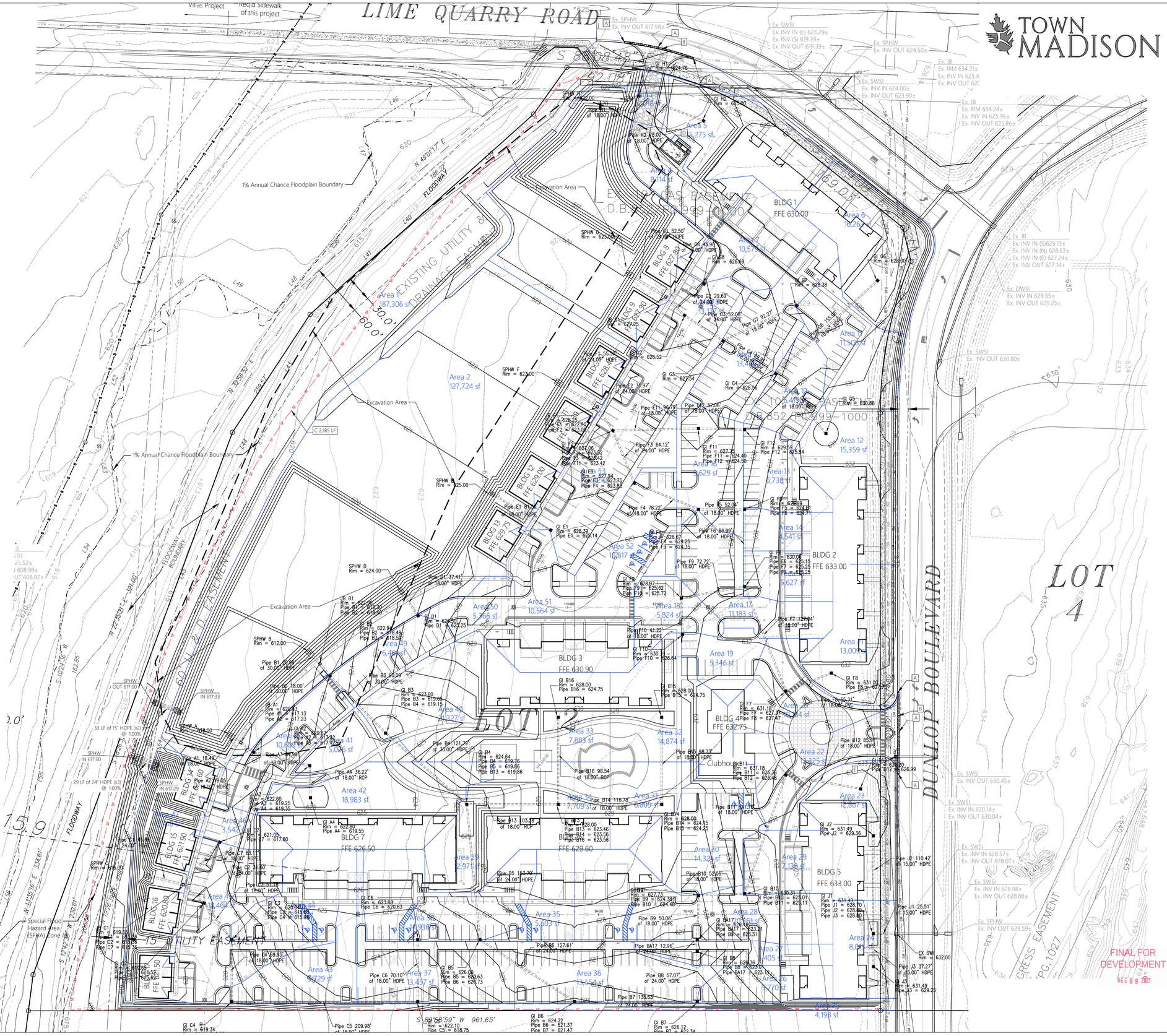

TOWN MADISON

REVISIONS

Date: ---
Date: ---
Date: ---
Date: ---
Date: ---
Date: ---
Date: ---
Date: ---
Date: ---
Date: ---

All documents, including Drawings and Bid Specifications, prepared or furnished by Firms listed on face, are instruments of service in respect of the client and firms listed on face, shall retain an ownership and property interest therein whether or not the Project is completed. Such documents are not intended to represented to be suitable for reuse by the Client or others on extensions of the Project or on any other project. Any reuse without written verification by Firms listed on face will entitle Firms listed on face to further compensation at rates to be agreed upon by Firms listed on face and the Client.

MULLINS, LLC
CIVIL ENGINEERING, DEVELOPMENT DESIGN
SURVEYING, LANDSCAPE ARCHITECTURE
2101 West Clinton Avenue, Suite 503, Huntsville, Al. 35805
(256) 690-5312

The Roberts Apartments at TM

Madison, AL

PREPARED FOR: ---

Post Development Drainage Map

Job No. 19-177
Date: 2021 9-21
Drawn By: JLH
Checked By: RS

SHEET NUMBER

D2

H2 ARCHITECTURAL SITE PLAN
1" = 60'-0"

GENERAL NOTES:

1. SEE CIVIL PLAN FOR PARKING SUMMARY.
2. THIS SITE PLAN IS FOR ARCHITECTURAL INFORMATION ONLY. SEE CIVIL & LANDSCAPE DOCUMENTS FOR SPECIFIC BUILDING LOCATION & OTHER SITE REQUIREMENTS. SEE LANDSCAPE DRAWINGS UNDER SEPARATE COVER FOR SITE CONFIGURATION, LAYOUT, GRADING AND RELATED INFORMATION
3. THE SWIMMING POOL(S) SHOWN ON THE DRAWINGS ARE PROVIDED FOR GENERAL LOCATION AND SHAPE SUGGESTION PURPOSES ONLY. FUGLEBERG KOCH LLC IS NOT QUALIFIED TO PROVIDE SERVICES FOR POOLS AND MAKES NO ATTEMPT TO DO SO. POOL DESIGN DOCUMENTS FOR CONSTRUCTION, CODE COMPLIANCE, AGENCY APPROVALS, CONSTRUCTION CERTIFICATION AND OTHER SERVICES REQUIRED FOR THE POOL(S) SHALL BE PERFORMED BY OTHERS UNDER THE SEPARATE CONTRACT WITH THE OWNER

LEGEND:

M.C	METER CENTER. APROX 2000 AMP LOAD PER NEC
B	DESIGNATED ANSI TYPE 'A' UNIT
	DESIGNATED ACCESIBLE GARAGE

ISSUE HISTORY

No.	Date	Description
1	04/15/2022	PERMIT SUBMITTAL

REVISION HISTORY

No.	Date	Description

FUGLEBERG KOCH
2555 Temple Trail, Winter Park, FL 32789 (407) 629-0595
www. fuglebergkoch.com AA26002103

CONSULTANT

STATE OF ALABAMA
MICHAEL E. GOVE
8234
4/15/22
REGISTERED ARCHITECT

MICHAEL GOVE
8234

Drawn:	MB
Checked:	JK
Approval:	MG
Date:	04/15/2022
Project #	5722

THE ROBERT MADISON
MADISON, ALABAMA

ARCHITECTURAL SITE PLAN

A1.01

© 2018 These documents and their contents are the property of FUGLEBERG KOCH - AA26002103. and are issued only for the specific project noted on these drawings. Any reproductions, extensions, or modifications of these documents without the expressed written consent of Fugleberg Koch is prohibited by law.

PLOTTED: 5/5/2022
4:14:52 PM

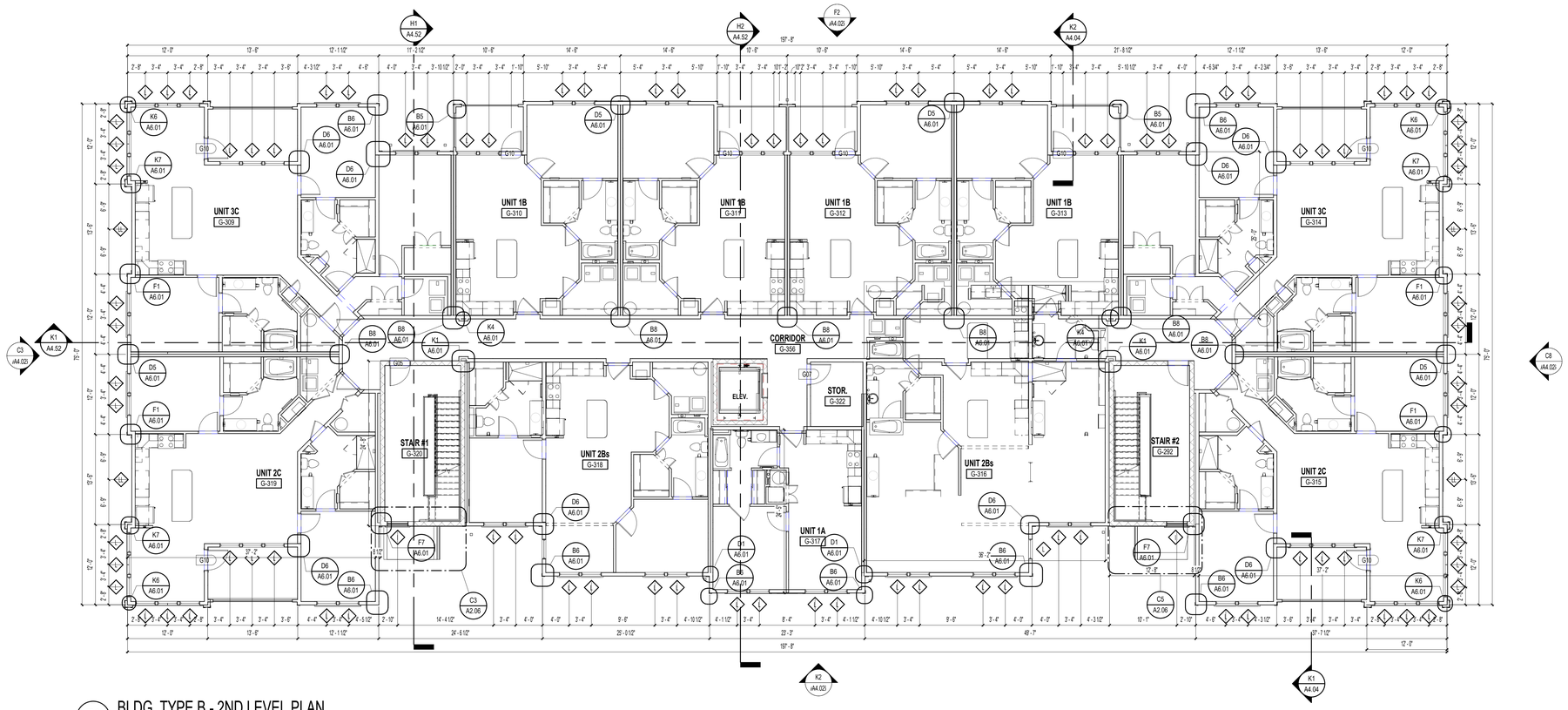

E3 BLDG. TYPE B - 2ND LEVEL PLAN
1/8" = 1'-0"

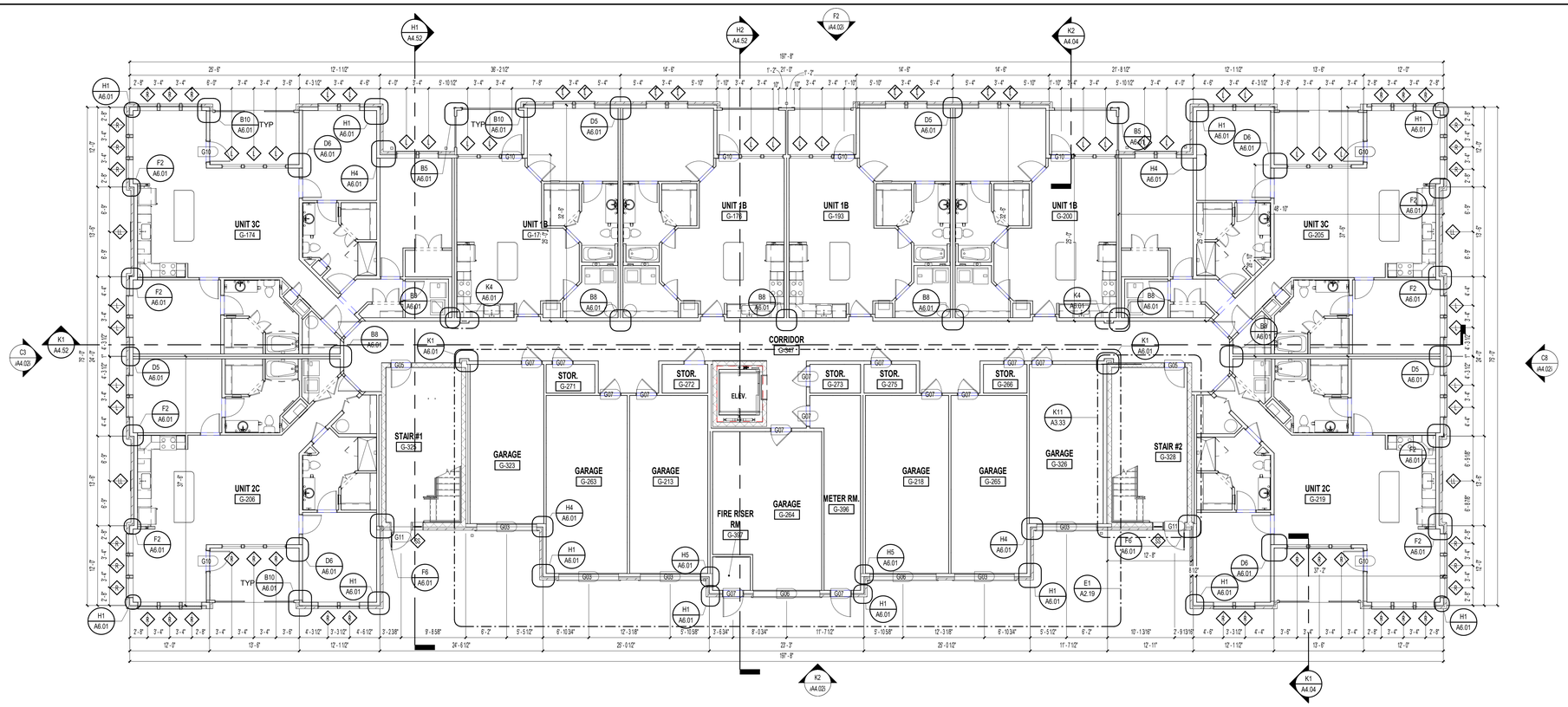

K3 BUILDING TYPE B - GROUND LEVEL PLAN
1/8" = 1'-0"

FLOOR PLAN NOTES:

01. EXTERIOR DIMENSIONS ARE FROM EXTERIOR FACE OF STUD TO EXTERIOR FACE OF STUD. WHEN A TENANT WALL OCCURS, DIMENSIONS ARE TAKEN TO THE CENTERLINE. ALL OTHER DIMENSIONS ARE FROM OUTSIDE FACE OF STUD UNLESS NOTED OTHERWISE. SEE UNIT PLANS FOR FURTHER DIMENSIONS.
02. CONTRACTOR TO FIELD VERIFY ALL DIMENSIONS. NOTIFY ARCHITECT OF ANY DISCREPANCIES.
03. SEE A300 SERIES SHEETS FOR UNIT PLAN INFORMATION.
04. CONTRACTOR TO COORDINATE FLOOR & CEILING CONTROL JOINT PLACEMENT COMMON AREA AT 8'-0" MAX ON CENTER WHERE POSSIBLE.
05. SEE CIVIL PLANS FOR ACTUAL FINISH FLOOR ELEVATIONS.
06. REFER TO CIVIL DWGS. FOR SIDEWALK CONDITIONS.
07. REFER TO ELEVATIONS AND FLOOR PLANS FOR WINDOW TYPES AND LOCATIONS.

ISSUE HISTORY

No.	Date	Description
1	04/15/2022	PERMIT SUBMITTAL

REVISION HISTORY

No.	Date	Description

© 2018 These documents and their contents are the property of FUGLEBERG KOCH - AA26002103, and are issued only for the specific project noted on these drawings. Any reproductions, reuse, or modifications of these documents without the expressed written consent of Fugleberg Koch is prohibited by law.

FUGLEBERG KOCH
2555 Temple Trail, Winter Park, FL 32789 (407) 629-0595
www.fuglebergkoch.com AA26002103

CONSULTANT

STATE OF ALABAMA
MICHAEL E. GOVE
8234
4/15/22
REGISTERED ARCHITECT

MICHAEL GOVE
8234

THE ROBERT MADISON
MADISON, ALABAMA

Drawn:	MB
Checked:	JK
Approval:	MG
Date:	04/15/2022
Project #:	5722

BUILDING TYPE B - GROUND & 2ND LEVEL PLANS

A2.04

PLOTTED: 5/3/2022 3:19:52 PM

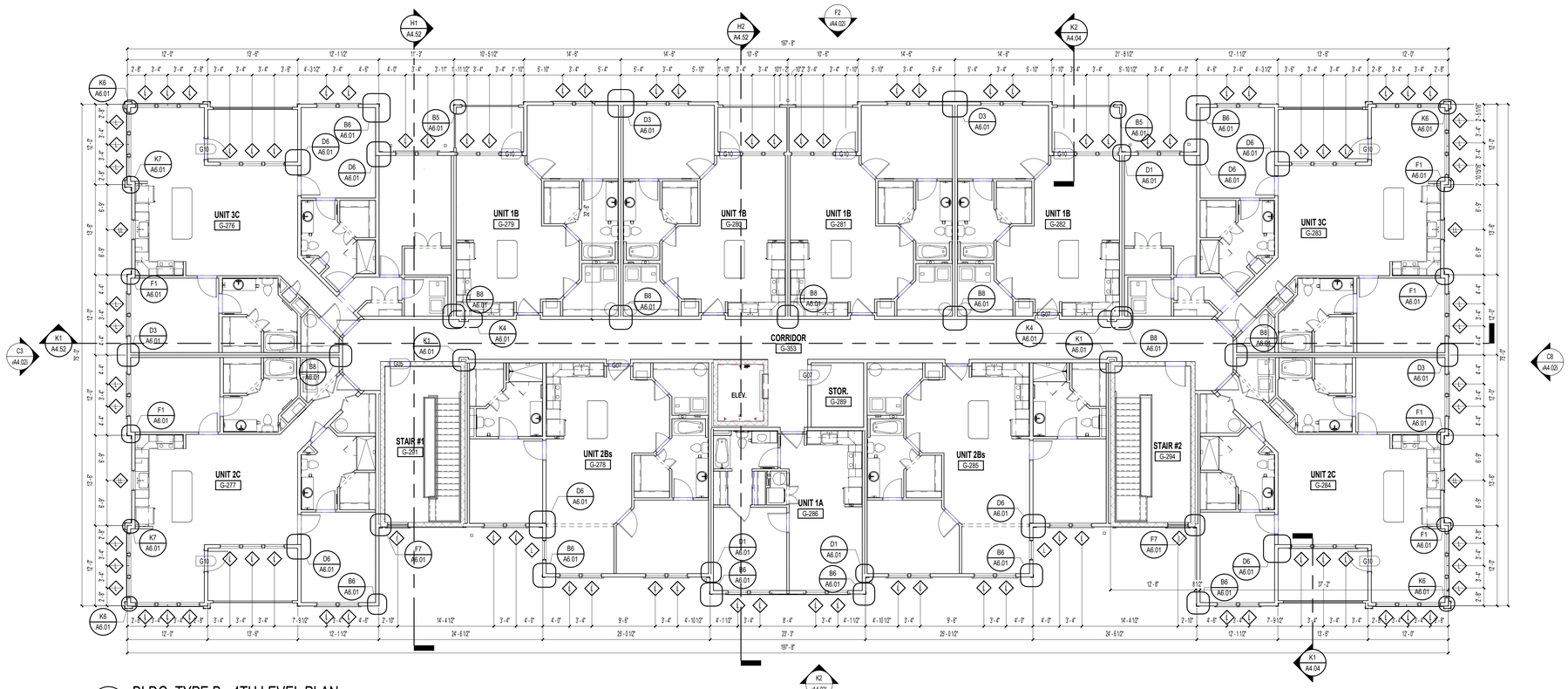

E3 BLDG. TYPE B - 4TH LEVEL PLAN
1/8" = 1'-0"

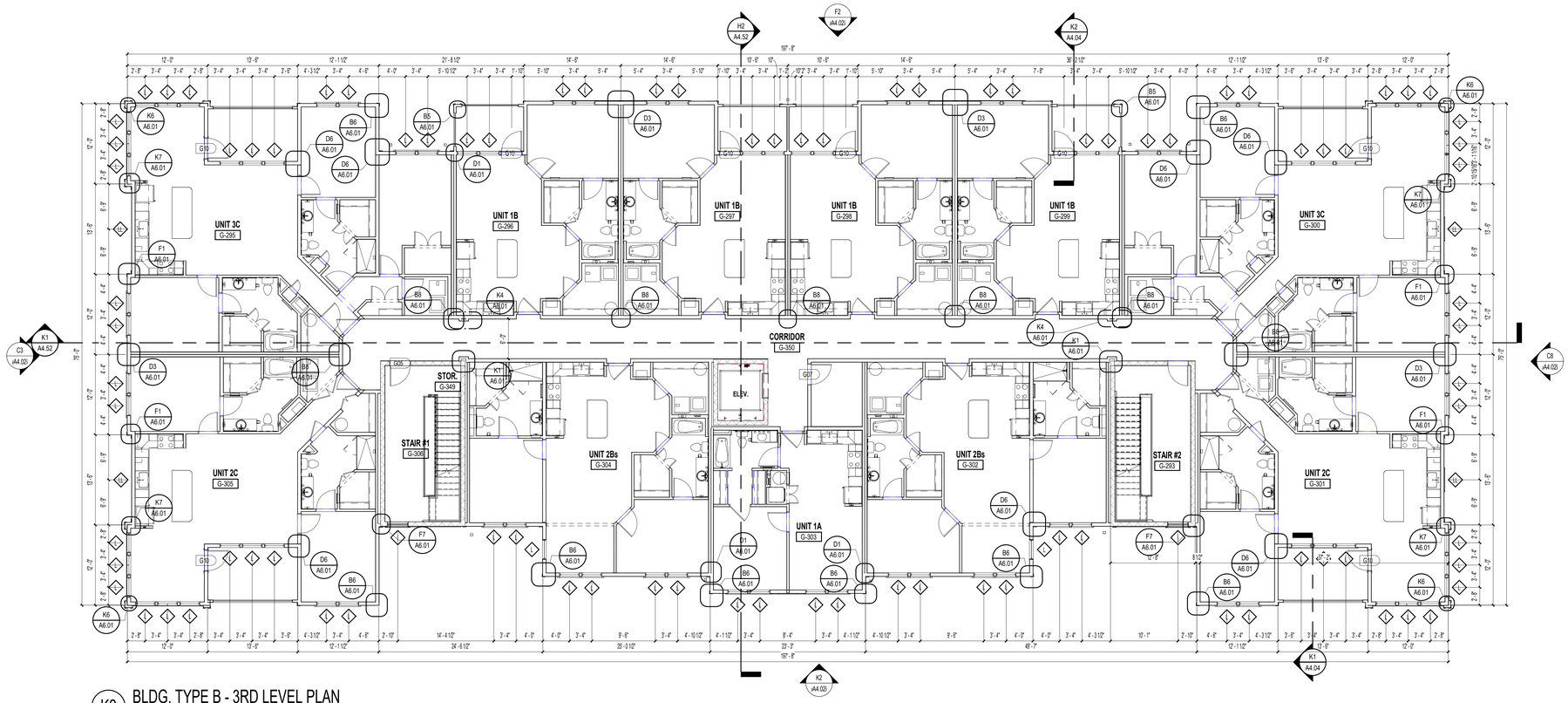

K2 BLDG. TYPE B - 3RD LEVEL PLAN
1/8" = 1'-0"

FLOOR PLAN NOTES:

01. EXTERIOR DIMENSIONS ARE FROM EXTERIOR FACE OF STUD TO EXTERIOR FACE OF STUD. WHEN A TENANT WALL OCCURS. DIMENSIONS ARE TAKEN TO THE CENTERLINE. ALL OTHER DIMENSIONS ARE FROM OUTSIDE FACE OF STUD UNLESS NOTED OTHERWISE. SEE UNIT PLANS FOR FURTHER DIMENSIONS.
02. CONTRACTOR TO FIELD VERIFY ALL DIMENSIONS. NOTIFY ARCHITECT OF ANY DISCREPANCIES.
03. SEE A300 SERIES SHEETS FOR UNIT PLAN INFORMATION.
04. CONTRACTOR TO COORDINATE FLOOR & CEILING CONTROL JOINT PLACEMENT COMMON AREA AT 8'-0" MAX ON CENTER WHERE POSSIBLE.
05. SEE CIVIL PLANS FOR ACTUAL FINISH FLOOR ELEVATIONS.
06. REFER TO CIVIL DWGS. FOR SIDEWALK CONDITIONS.
07. REFER TO ELEVATIONS AND FLOOR PLANS FOR WINDOW TYPES AND LOCATIONS.

ISSUE HISTORY

No.	Date	Description
1	04/15/2022	PERMIT SUBMITTAL

REVISION HISTORY

No.	Date	Description

FUGLEBERG KOCH
2555 Temple Trail, Winter Park, FL 32789 (407) 629-0595
www.fuglebergkoch.com AA26002103

CONSULTANT

STATE OF ALABAMA LICENSED PROFESSIONAL ARCHITECT 8234 4/15/22 REGISTERED ARCHITECT

MICHAEL GOVE
8234

Drawn:	MB
Checked:	JK
Approval:	MG
Date:	04/15/2022
Project #:	5722

THE ROBERT MADISON
MADISON, ALABAMA

BUILDING TYPE B - 3RD & 4TH LEVEL PLANS

A2.05

PLOTTED: 5/3/2022 3:20:10 PM

© 2018 These documents and their contents are the property of FUGLEBERG KOCH. Any reproductions, alterations, or modifications of these documents without the expressed written consent of Fugleberg Koch is prohibited by law.

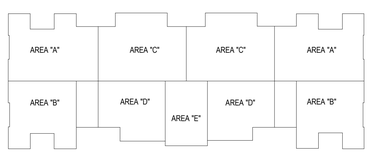

DRAFTSTOP - KEY PLAN - BLDG B
1" = 40'-0"

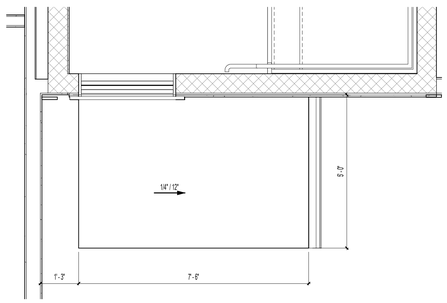

C3 BLDG. TYPE B - ENTRANCE ROOF 1
1/2" = 1'-0"

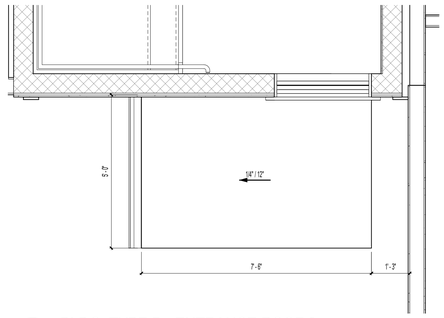

C5 BLDG. TYPE B - ENTRANCE ROOF 2
1/2" = 1'-0"

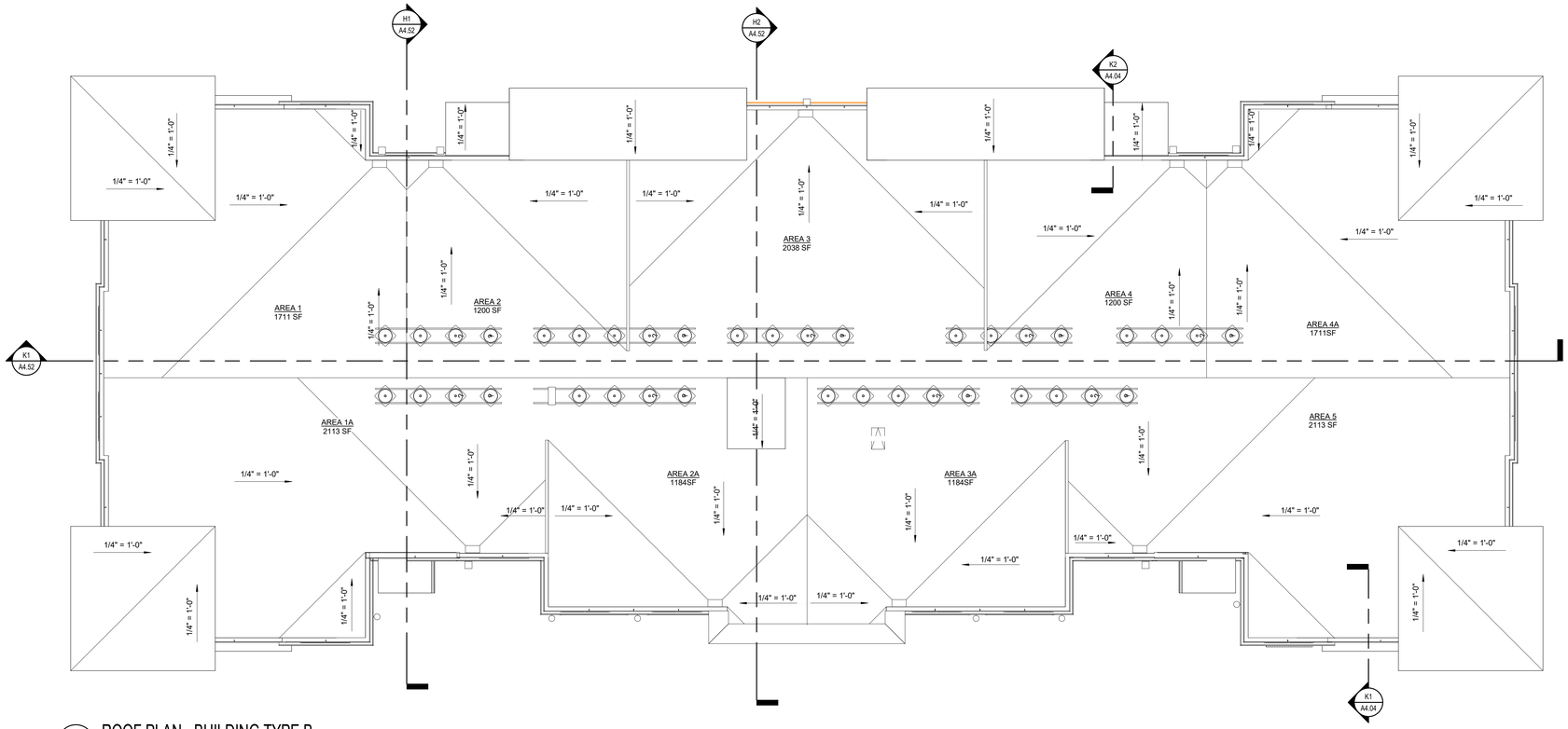

J3 ROOF PLAN - BUILDING TYPE B
1/8" = 1'-0"

GENERAL NOTES:

1. PAINT ALL ROOF VENTS & PENETRATIONS TO MATCH ROOF SHINGLE COLOR
2. COORDINATE DOWNSPOUT DISCHARGE WITH CIVIL DRAWINGS. WHERE NOT TAKEN TO STORM, PROVIDE SPLASH BLOCK.
3. LEAVE OPENING IN MAIN ROOF SHEATHING FOR VENTILATION UNDERNEATH OVER BUILT AREAS.
4. DOWNSPOUTS AND GUTTERS SHOWN ARE MIN. REQUIREMENTS SUBJECT TO OWNER'S CONSIDERATIONS
5. CONTRACTOR SHALL BE RESPONSIBLE TO MEET MINIMUM ROOF VENT REQUIREMENTS
6. GENERAL CONTRACTOR SHALL COORDINATE ALL ROOF ACCESSORIES INSTALLATION DETAILS PER MANUFACTURER'S SPEC'S TO MAINTAIN THE WATERTIGHT SYSTEM & EXTENDED WARRANTY
7. SEE CIVIL SITE PLAN FOR BUILDING ORIENTATION. CARDINAL DIRECTIONS SHOWN FOR REFERENCE ONLY

LEGEND:

- DRAFTSTOPPING TO UNDERSIDE OF ROOF DECK
- 1HR. FIRE RATED (if required) ATTIC ACCESS PANEL, MIN. 22"X36". COORDINATE WITH ROOF TRUSSES
- OFF RIDGE VENT. SEE VENT SCHEDULE
- ICE & WATER SHIELD / SELF-ADHEARED MEMBRANE UNDER ROOF FELT, 24" BACK FROM FACE OF EXTERIOR WALL TO EDGE OF EVE AND 24" WIDE @ ALL RAKES, RIDGES, VALLYS, HIPS, FLASHING AND UNDER ALL SHINGLE ROOFS LESS THAN 4"/12" SLOPE
- **D.S.** DOWNSPOUT

ISSUE HISTORY

No.	Date	Description
1	04/15/2022	PERMIT SUBMITTAL

REVISION HISTORY

No.	Date	Description

FUGLEBERG KOCH
2555 Temple Trail, Winter Park, FL 32789 (407) 629-0595
www. fuglebergkoch.com AA26002103

CONSULTANT

STATE OF ALABAMA
MICHAEL E. GOVE
8234
4/15/22
REGISTERED ARCHITECT

MICHAEL GOVE
8234

THE ROBERT MADISON
MADISON, ALABAMA

Drawn:	MB
Checked:	JK
Approval:	MG
Date:	04/15/2022
Project #:	5722

BUILDING TYPE B - ROOF PLAN

A2.06

PLOTTED: 5/3/2022 3:20:23 PM

© 2019 These documents and their contents are the property of FUGLEBERG KOCH - AA26002103, and are issued only for the specific project noted on these drawings. Any reproductions, extensions, or modifications of these documents without the expressed written consent of Fugleberg Koch is prohibited by law.

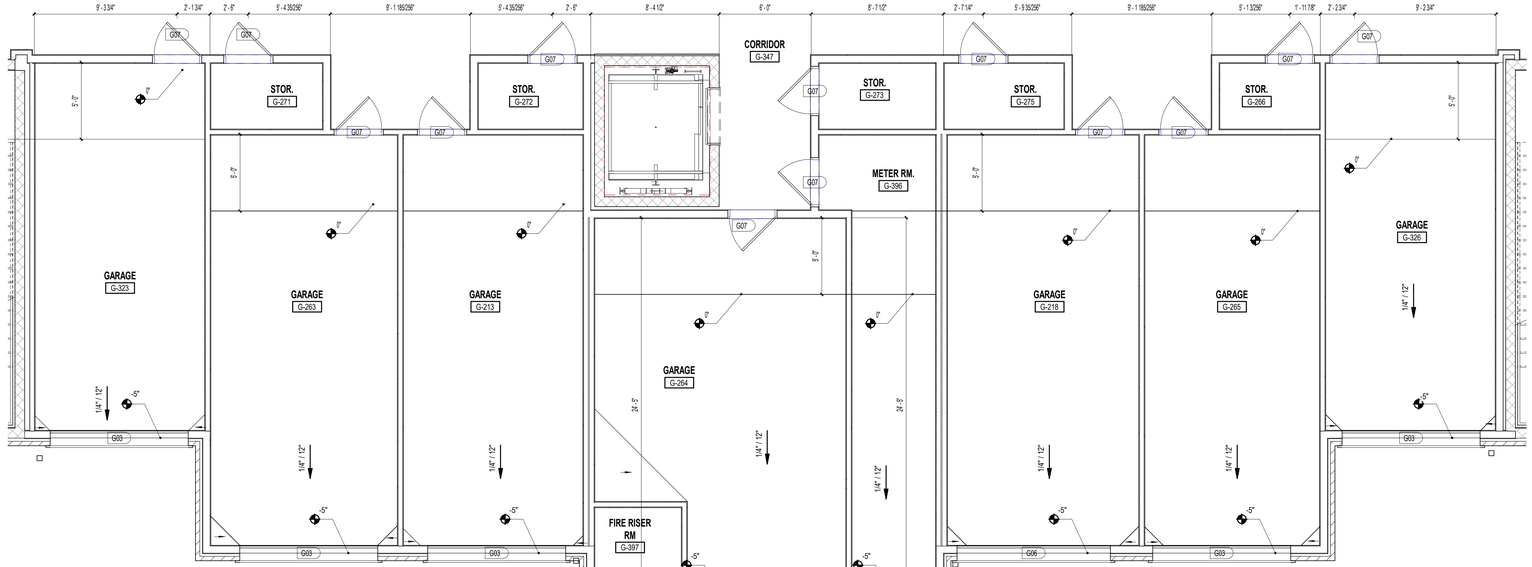

E1 ENLARGED GARAGE PLAN 1 - BUILDING TYPE B
1/4" = 1'-0"

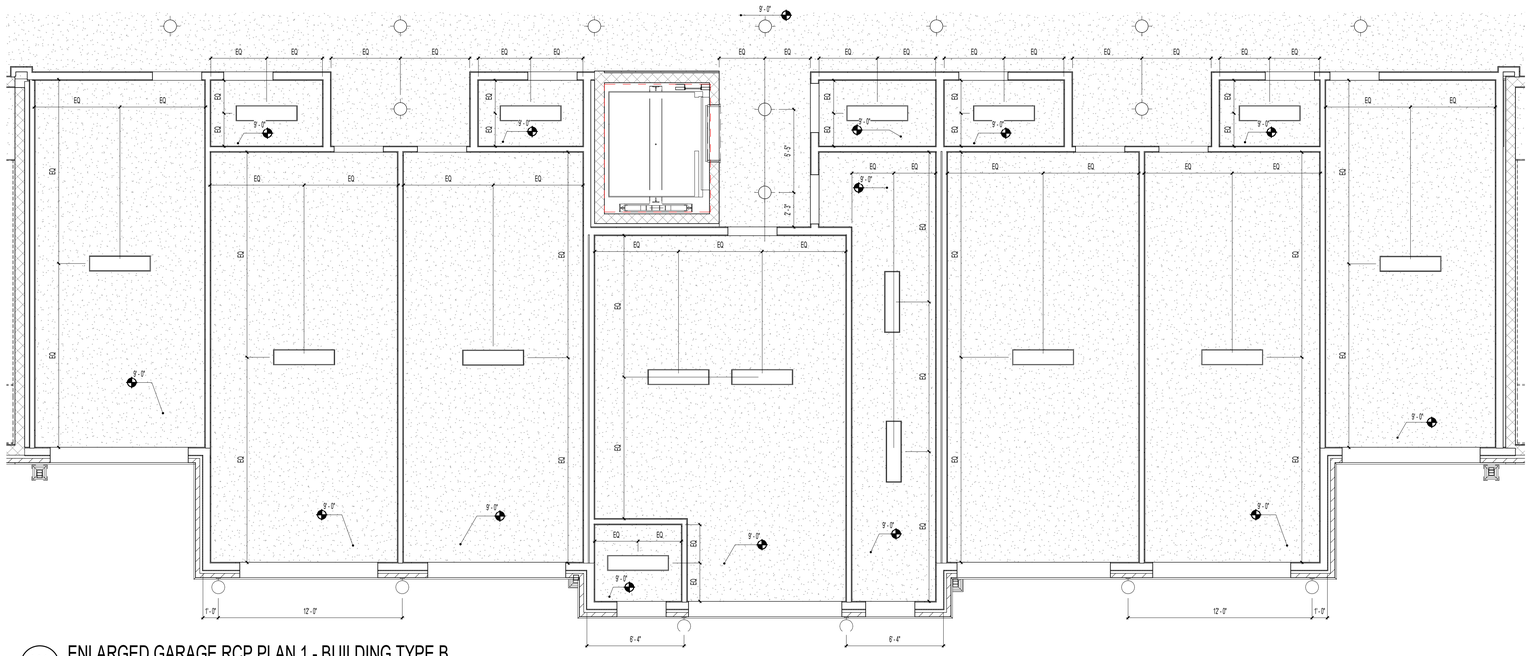

K1 ENLARGED GARAGE RCP PLAN 1 - BUILDING TYPE B
1/4" = 1'-0"

GENERAL NOTES:

A. ALL DIMENSIONS ARE FROM OUTSIDE FACE OF STUD UNLESS NOTED OTHERWISE. SEE UNIT PLANS FOR FURTHER DIMENSIONS.

B. CONTRACTOR TO FIELD VERIFY ALL DIMENSIONS. NOTIFY ARCHITECT OF ANY DISCREPANCIES.

C. ALL INTERIOR WALLS ARE 2X4 UNLESS OTHERWISE NOTED. SEE STRUCTURAL FOR SPACING. REFER TO LIFE SAFETY FOR ASSEMBLY TYPES

RCP LEGEND

NOTE: RCP DIMS ARE FROM FINISH FACE OF WALL

- 5/8" FR GYP BD CEILING ON RC CHANNEL - 9'-0" AFF U.N.O.
- EXIT LIGHT
- RECESSED CAN LIGHT
- CEILING MOUNTED LIGHT
- EXTERIOR CEILING MOUNTED LIGHT
- SPRINKLER HEAD - CEILING MOUNTED
- SPRINKLER HEAD - WALL MOUNTED
- SMOKE DETECTORS
- FLORESCENT STRIP LIGHT
- COMBINATION AUDIBLE / VISUAL DEVICE - FIRE ALARM
- CEILING FAN
- FIXTURE VANITY LIGHT - WALL MOUNTED
- EXTERIOR LIGHT - WALL MOUNTED
- EXHAUST FAN - CEILING MOUNTED
- SQUARE SUPPLY DIFFUSER - CEILING MOUNTED
- SQUARE RETURN DIFFUSER - CEILING MOUNTED
- SQUARE SUPPLY DIFFUSER - CEILING MOUNTED
- SUPPLY DIFFUSER - WALL MOUNTED
- EXHAUST FAN - WALL MOUNTED
- THRU-WALL GRILL
- ATTIC ACCESS PANEL

ISSUE HISTORY

No.	Date	Description
1	04/15/2022	PERMIT SUBMITTAL

REVISION HISTORY

No.	Date	Description

© 2018 These documents and their contents are the property of FUGLEBERG KOCH, ARCHITECTS. These documents are issued only for the specific project noted on these drawings. Any reproductions, revisions, or modifications of these documents without the expressed written consent of Fugleberg Koch is prohibited by law.

FUGLEBERG KOCH
2555 Temple Trail, Winter Park, FL 32789 (407) 629-0595
www.fuglebergkoch.com AA26002103

CONSULTANT

STATE OF ALABAMA
MICHAEL E. GOVE
8234
4/15/22
REGISTERED ARCHITECT

MICHAEL GOVE
8234

Drawn:	MB
Checked:	JK
Approval:	MG
Date:	04/15/2022
Project #:	5722

THE ROBERT MADISON
MADISON, ALABAMA

BLDG B - ENLARGED GARAGE PLAN

A2.19

PLOTTED: 5/3/2022 3:21:30 PM

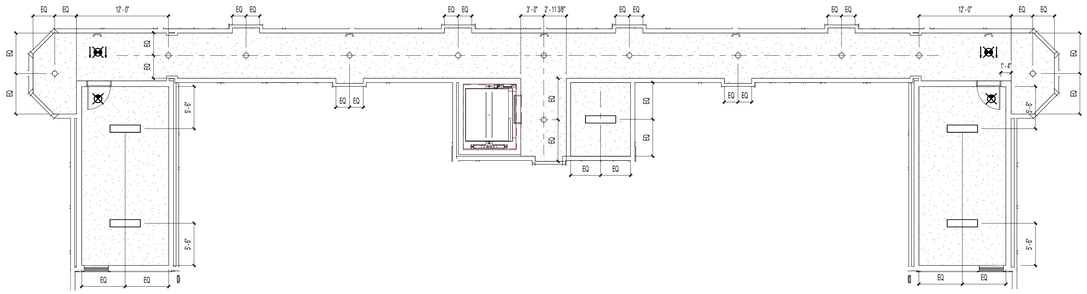

C1 BUILDING TYPE B - RCP CORRIDOR - LEVEL 4
1/8" = 1'-0"

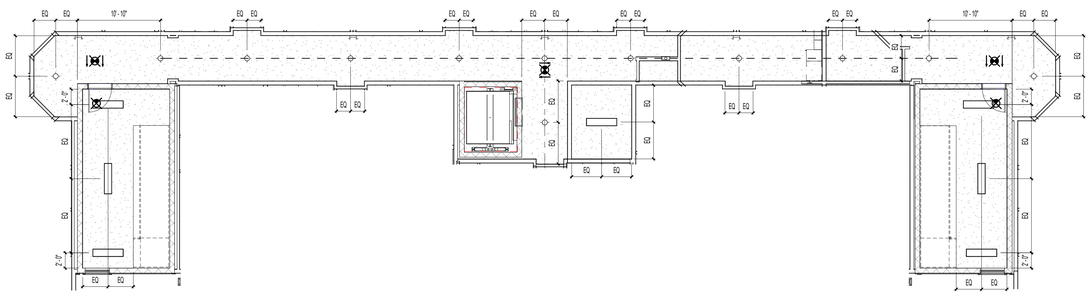

F1 BUILDING TYPE B - RCP CORRIDOR - LEVEL 2 & LEVEL 3
1/8" = 1'-0"

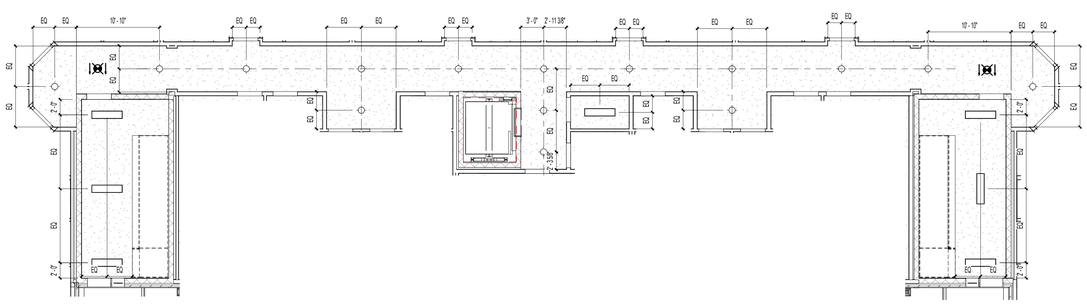

K1 BUILDING TYPE B - CORRIDOR RCP - GROUND LEVEL
1/8" = 1'-0"

GENERAL NOTES:

A. ALL DIMENSIONS ARE FROM OUTSIDE FACE OF STUD UNLESS NOTED OTHERWISE. SEE UNIT PLANS FOR FURTHER DIMENSIONS.
B. CONTRACTOR TO FIELD VERIFY ALL DIMENSIONS. NOTIFY ARCHITECT OF ANY DISCREPANCIES.
C. SEE A300 SERIES SHEETS FOR UNIT PLAN INFORMATION.

RCP LEGEND

NOTE: RCP DIMS ARE FROM FINISH FACE OF WALL

- 5/8" FR GYP BD CEILING ON RC CHANNEL - 9'-0" AFF U.N.O.
- EXIT LIGHT
- EXIT LIGHT TYPE 2
- EMERGENCY LIGHT - SIDEWALL
- CEILING MOUNTED LIGHT
- SPRINKLER HEAD - CEILING MOUNTED
- EXTERIOR CEILING MOUNTED LIGHT
- FLUORESCENT STRIP LIGHT
- ATTIC ACCESS PANEL

ISSUE HISTORY

No.	Date	Description
1	04/15/2022	PERMIT SUBMITTAL

REVISION HISTORY

No.	Date	Description

© 2015 These documents and their contents are the property of FUGLEBERG KOCH - AA26002103, and are issued only for the specific project noted on these drawings. Any reproductions, versions, or modifications of these documents without the expressed written consent of Fugleberg Koch is prohibited by law.

FUGLEBERG KOCH
2555 Temple Trail, Winter Park, FL 32789 (407) 629-0595
www.fuglebergkoch.com AA26002103

CONSULTANT

STATE OF ALABAMA
MICHAEL E. GOVE
8234
4/15/22
REGISTERED ARCHITECT

MICHAEL GOVE
8234

THE ROBERT MADISON
MADISON, ALABAMA

Drawn:	MB
Checked:	JK
Approval:	MG
Date:	04/15/2022
Project #:	5722

BUILDING TYPE B - CORRIDOR RCP

A2.22

PLOTTED: 5/3/2022 3:22:05 PM

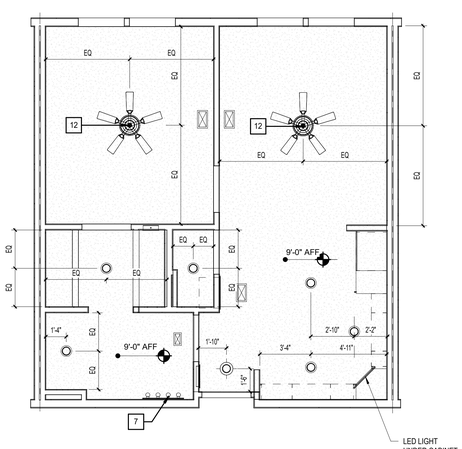

C1 UNIT 1A - RCP
1/4" = 1'-0"

RCP LEGEND - UNITS

	SMOKE DETECTOR
	LED FLUSH MOUNT - INTERIOR / EXTERIOR
	LED WALL MOUNT - INTERIOR
	PENDANT - CEILING MOUNTED
	LIGHT - WALL MOUNTED
	CEILING FAN - WITH LIGHT KIT
	MULTI FIXTURE VANITY LIGHT - WALL MOUNTED
	LED UNDER CABINET DOWNLIGHT
	SQUARE SUPPLY DIFFUSER - CEILING MOUNTED
	SQUARE RETURN DIFFUSER - CEILING MOUNTED
	SUPPLY DIFFUSER - WALL MOUNTED
	RETURN DIFFUSER - WALL MOUNTED
	ADA HORN/STROBE DEVICE - WALL MT.
	GYPSUM BOARD CEILING @ 9'-0"

NOTES:
1. RCP DIMS SHOWN ARE FROM FACE OF FINISH.
2. ALIGN UNDER CABINET LIGHTS WITH THE CENTER OF THE CABINET ABOVE.

LEGEND:

- CLEAR FLOOR SPACE
- LEVEL CHANGE
- X — DENOTES BATHROOM ACCESSORY/KITCHEN APPLIANCE
- BATT INSULATION
- ELEVATION / PLAN — DENOTES BLOCKING FOR FUTURE GRAB BARS. REFER TO FHA CLEARANCES FOR MORE INFO.

BATH & KITCHEN LEGEND: X

1. 18" TOWEL BAR
2. TOILET TISSUE HOLDER
3. CURVED SHOWER ROD
4. MEDICINE CABINET
5. MIRROR
6. HAND TOWEL RING
7. SOAP DISH
8. RECESSED CABINET ABOVE W.C.
9. 24" TOWEL BAR
10. GRAB BAR REINFORCEMENT, BTWN. 2'-6" MAX. A.F.F. & 3'-2" MIN. A.F.F.-(GRAB BARS TO BE INSTALLED IN ALL ANSI TYPE 'A' UNITS)
11. SHOWER HEAD
12. WATER CLOSET STD. HT.
13. LIGHT FIXTURE (SEE ELECTRICAL)
14. SINK
15. MICROWAVE
16. RANGE
17. DISHWASHER
18. REFRIGERATOR
19. OVEN
20. ANSI OVEN
21. VANITY CABINET W/SINK
22. 36" - TUB
23. EXHAUST FAN
24. 32" - TUB
25. 6X6 TILE
26. HAND HELD/FIXED SHOWER SPRAY UNIT W/HOSE 60" MIN. LONG AND ADJUSTABLE BAR
27. REMOVABLE IN TUB SEAT
28. FIBERGLASS TUB W/ TILE SURROUND
29. GLASS SHOWER ENCLOSURE W/ TILE WALLS & ACRYLIC PRE-FABRICATED PAN.

UNIT 1A - Total Gross Area Schedule

Name	Area	Bedrooms	Baths	Den	Occupants
UNIT 1A	580 SF	1	1		
	580 SF				

UNIT 1A - Total Net Area

Name	Area	Bedrooms	Baths	Den
UNIT 1A	543 SF	1	1	
	543 SF			

GENERAL NOTES:

1. ALL DIMENSIONS ARE FROM OUTSIDE FACE OF STUD UNLESS NOTED OTHERWISE.
2. REFER TO EXTERIOR ELEVATIONS AND BUILDING PLANS FOR WINDOW TYPE.
3. CONTRACTOR TO FIELD VERIFY ALL DIMENSIONS. NOTIFY ARCHITECT OF ANY DISCREPANCIES.
4. REFER TO A3.30 - A3.52 FOR BALCONY PLANS SPECIFIC TO EACH UNIT AS IT OCCURS THROUGHOUT.
5. ALL PLUMBING WALLS NEED TO BE COORDINATED WITH PLUMBER TO DETERMINE 2X4 OR 2X6 CONSTRUCTION.
6. PROVIDE ONE 4-A: 10-B:C 5 lb FIRE EXTINGUISHER PER UNIT. LOCATE PER FIRE DEPARTMENT REQUIREMENTS.
7. PROVIDE ACOUSTICAL UNDERLAYMENT UNDERNEATH VINYL PLANK FLOORING LOCATIONS WITHIN UNITS ON ELEVATED FLOORS. REFER TO SPECIFICATIONS FOR APPROVED PRODUCT.
8. PROVIDE DISPOSER AT ALL KITCHEN SINKS, REFER TO PLANS FOR AIR SWITCH LOCATION, PLACE ON SAME SIDE AS DISPOSER.
9. CLOSET RODS:
   - A. 12" DEEP, TOP OF SHELVING IN CLOSETS SHALL BE AT 3'-0" AND 6'-0", SEE PLANS
   - B. 12" DEEP SHELVING AT PANTRIES & LINEN CLOSETS: 5 SHELVES EQUALLY SPACED @ 13" A PART (16", 29", 42", 55" AND 68").
   - C. PROVIDE (5) 18" X 12" DEEP LINEN SHELVES EQUALLY SPACED AT BEDROOM/CLOSET ENDS WHERE INDICATED.
   - D. SHELVING AT LAUNDRY ROOMS - 24" DEEP @ 5'-7". SHELVING AT ENTRY CLOSETS - 12" DEEP @ 6'-0".
10. KITCHEN OUTLETS SHALL BE SPACED PER NEC. FHA REQUIRES THAT OUTLETS BE PLACED NO LESS THAN 3'-0" FROM THE CORNER UNLESS AN ADDITIONAL OUTLET IS ADDED. KITCHEN ELEVATIONS INDICATE APPROXIMATE DIMENSIONS NEEDED TO MEET BOTH NEC AND FHA. 4'-0" O.C. MAX. BETWEEN OUTLETS SHALL BE PROVIDED AROUND A CORNER.
11. SEE SHEET A3.10 FOR STANDARD MOUNTING HEIGHTS AND DETAILS.
12. PROVIDE WINDOW-EASE OPENING DEVICE AT ACCESSIBLE UNIT OPERABLE WINDOWS (WWW.WINDOWEASE.COM).

UNIT KEYNOTES: X

1. ELECTRICAL PANEL. REFER TO ELECTRICAL DWGS.
2. HVAC UNIT. SEE MECHANICAL DRAWINGS.
3. WIRE SHELF & POLE @6'-0"
4. WIRE SHELF @3'-4" & 6'-0" AFF.
5. SHELF ABOVE WASHER @ 5'-6" AFF.
6. MAINTAIN MIN. 3'-0" CLEAR BETWEEN FINISHES AND FURNITURE. TYP.
7. CENTER LIGHTING FIXTURE ABOVE LAVATORY.
8. WASHER BOX.
9. DRYER VENT.
10. COMBO WASHER / DRYER BOX
11. MOVABLE KITCHEN ISLAND
12. PROVIDE FAN RATED REINFORCED J-BOX
13. ATTIC ACCESS, TOP FLOOR UNITS ONLY.
14. WATER HEATER. SEE PLUMBING DRAWINGS.
15. ACCESS PANEL FOR MECH. UNIT.
16. FRAMELESS MIRROR.
17. WASHER.
18. DRYER.
19. STACKED WASHER/DRYER COMBO.
20. ICE MAKER CONNECTION.

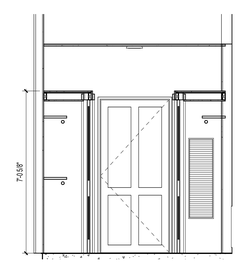

G5 WALK-THRU CLOSET SECTION
3/8" = 1'-0"

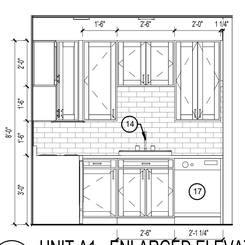

H3 UNIT A1 - ENLARGED ELEVATION
3/8" = 1'-0"

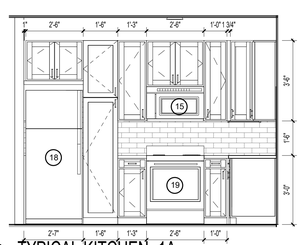

H2 TYPICAL KITCHEN -1A
3/8" = 1'-0"

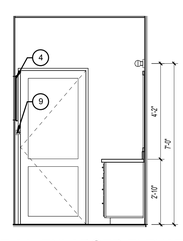

H1 UNIT A1 -ENLARGED ELEVATION
3/8" = 1'-0"

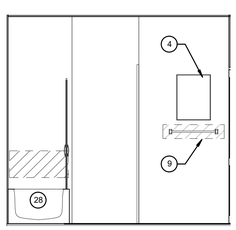

K4 UNIT A1 - ENLARGED ELEVATION
3/8" = 1'-0"

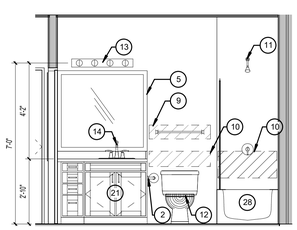

K3 UNIT A1 - ENLARGED ELEVATION
3/8" = 1'-0"

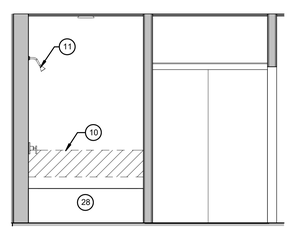

K2 UNIT A1 - ENLARGED ELEVATION
3/8" = 1'-0"

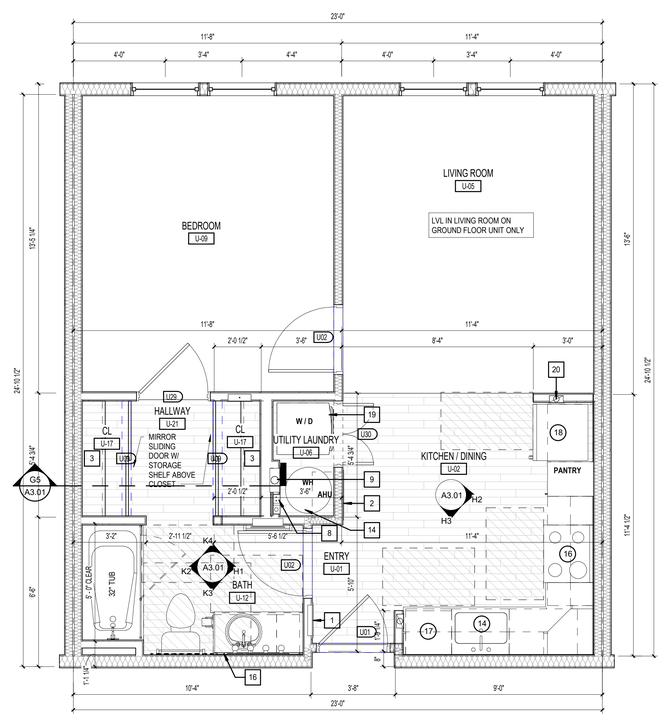

K1 UNIT 1A - DIMENSIONS & REFERENCE PLAN
3/8" = 1'-0"

ISSUE HISTORY

No.	Date	Description

REVISION HISTORY

No.	Date	Description

FUGLEBERG KOCH
2555 Temple Trail, Winter Park, FL 32789 (407) 629-0595
www. fuglebergkoch.com AA26002103

CONSULTANT

STATE OF ALABAMA
MICHAEL E. GOVE
8234
4/15/22
REGISTERED ARCHITECT

MICHAEL GOVE 8234

THE ROBERT - MADISON	Drawn: MS
MADISON, ALABAMA	Checked: JK
	Approval: MG
	Date: 04/15/2022
	Project #: 5722

UNIT 1A - 1BR. UNIT PLAN

A3.01

PLOTTED: 5/3/2022 3:08:45 PM

© 2019 These Documents and their contents are the property of FUGLEBERG KOCH - ARCHITECTS, and are issued only for the specific project noted on these drawings. Any reproductions, alterations, or modifications of these documents without the expressed written consent of Fugleberg Koch is prohibited by law.

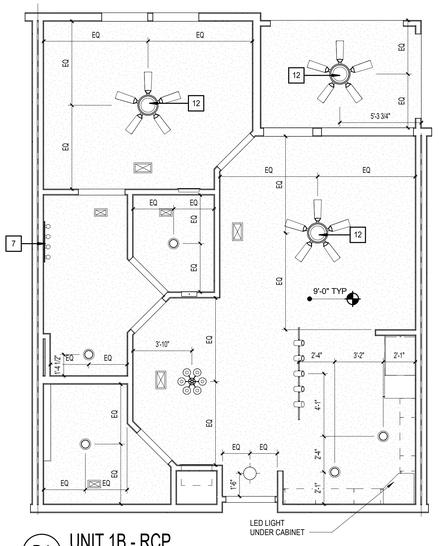

D1 UNIT 1B - RCP
1/4" = 1'-0"

RCP LEGEND - UNITS

	SMOKE DETECTOR
	LED FLUSH MOUNT - INTERIOR / EXTERIOR
	LED WALL MOUNT - INTERIOR
	PENDANT - CEILING MOUNTED
	LIGHT - WALL MOUNTED
	CEILING FAN - WITH LIGHT KIT
	MULTI FIXTURE VANITY LIGHT - WALL MOUNTED
	LED UNDER CABINET DOWNLIGHT
	SQUARE SUPPLY DIFFUSER - CEILING MOUNTED
	SQUARE RETURN DIFFUSER - CEILING MOUNTED
	SUPPLY DIFFUSER - WALL MOUNTED
	RETURN DIFFUSER - WALL MOUNTED
	ADA HORN/STROBE DEVICE - WALL MT.
	GYPSUM BOARD CEILING @ 9'-0"

NOTES:
1. RCP DIMS SHOWN ARE FROM FACE OF FINISH.
2. ALIGN UNDER CABINET LIGHTS WITH THE CENTER OF THE CABINET ABOVE.

LEGEND:

	CLEAR FLOOR SPACE
	LEVEL CHANGE
X	DENOTES BATHROOM ACCESSORY/KITCHEN APPLIANCE
	BATT INSULATION
ELEVATION / PLAN	DENOTES BLOCKING FOR FUTURE GRAB BARS. REFER TO FHA CLEARANCES FOR MORE INFO.

BATH & KITCHEN LEGEND: X

1. 18" TOWEL BAR
2. TOILET TISSUE HOLDER
3. CURVED SHOWER ROD
4. MEDICINE CABINET
5. MIRROR
6. HAND TOWEL RING
7. SOAP DISH
8. RECESSED CABINET ABOVE W.C.
9. 24" TOWEL BAR
10. GRAB BAR REINFORCEMENT, BTWN. 2'-6" MAX. A.F.F. & 3'-2" MIN. A.F.F.-(GRAB BARS TO BE INSTALLED IN ALL ANSI TYPE 'A' UNITS)
11. SHOWER HEAD
12. WATER CLOSET STD. HT.
13. LIGHT FIXTURE (SEE ELECTRICAL)
14. SINK
15. MICROWAVE
16. RANGE
17. DISHWASHER
18. REFRIGERATOR
19. OVEN
20. ANSI OVEN
21. VANITY CABINET W/SINK
22. 36" - TUB
23. EXHAUST FAN
24. 32" - TUB
25. 6X6 TILE
26. HAND HELD/FIXED SHOWER SPRAY UNIT W/HOSE 60" MIN. LONG AND ADJUSTABLE BAR
27. REMOVABLE IN TUB SEAT
28. FIBERGLASS TUB W/ TILE SURROUND
29. GLASS SHOWER ENCLOSURE W/ TILE WALLS & ACRYLIC PRE-FABRICATED PAN.

UNIT 1B - Total Gross Area Schedule

Name	Area	Bedrooms	Baths	Den	Occupants
UNIT 1B	731 SF	1	1	1	
BALCONY	80 SF				
	811 SF				

UNIT 1B - Total Net Area

Name	Area	Bedrooms	Baths	Den
UNIT 1B	690.54 SF	1	1	1
	690.54 SF			

GENERAL NOTES:

1. ALL DIMENSIONS ARE FROM OUTSIDE FACE OF STUD UNLESS NOTED OTHERWISE.
2. REFER TO EXTERIOR ELEVATIONS AND BUILDING PLANS FOR WINDOW TYPE.
3. CONTRACTOR TO FIELD VERIFY ALL DIMENSIONS. NOTIFY ARCHITECT OF ANY DISCREPANCIES.
4. REFER TO A3.30 - A3.52 FOR BALCONY PLANS SPECIFIC TO EACH UNIT AS IT OCCURS THROUGHOUT.
5. ALL PLUMBING WALLS NEED TO BE COORDINATED WITH PLUMBER TO DETERMINE 2X4 OR 2X6 CONSTRUCTION.
6. PROVIDE ONE 4-A: 10-B:C 5 lb FIRE EXTINGUISHER PER UNIT. LOCATE PER FIRE DEPARTMENT REQUIREMENTS.
7. PROVIDE ACOUSTICAL UNDERLAYMENT UNDERNEATH VINYL PLANK FLOORING LOCATIONS WITHIN UNITS ON ELEVATED FLOORS. REFER TO SPECIFICATIONS FOR APPROVED PRODUCT.
8. PROVIDE DISPOSER AT ALL KITCHEN SINKS, REFER TO PLANS FOR AIR SWITCH LOCATION, PLACE ON SAME SIDE AS DISPOSER.
9. CLOSET RODS:
   A. 12" DEEP, TOP OF SHELVING IN CLOSETS SHALL BE AT 3'-0" AND 6'-0", SEE PLANS
   B. 12" DEEP SHELVING AT PANTRIES & LINEN CLOSETS: 5 SHELVES EQUALLY SPACED @ 13" A PART (16", 29", 42", 55" AND 68").
   C. PROVIDE (5) 18" X 12" DEEP LINEN SHELVES EQUALLY SPACED AT BEDROOM/CLOSET ENDS WHERE INDICATED.
   D. SHELVING AT LAUNDRY ROOMS - 24" DEEP @ 5'-7". SHELVING AT ENTRY CLOSETS - 12" DEEP @ 6'-0".
10. KITCHEN OUTLETS SHALL BE SPACED PER NEC. FHA REQUIRES THAT OUTLETS BE PLACED NO LESS THAN 3'-0" FROM THE CORNER UNLESS AN ADDITIONAL OUTLET IS ADDED. KITCHEN ELEVATIONS INDICATE APPROXIMATE DIMENSIONS NEEDED TO MEET BOTH NEC AND FHA. 4'-0" O.C. MAX. BETWEEN OUTLETS SHALL BE PROVIDED AROUND A CORNER.
11. SEE SHEET A3.10 FOR STANDARD MOUNTING HEIGHTS AND DETAILS.
12. PROVIDE WINDOW-EASE OPENING DEVICE AT ACCESSIBLE UNIT OPERABLE WINDOWS (WWW.WINDOWEASE.COM).

UNIT KEYNOTES: X

1. ELECTRICAL PANEL. REFER TO ELECTRICAL DWGS.
2. HVAC UNIT, SEE MECHANICAL DRAWINGS.
3. WIRE SHELF & POLE @6'-0"
4. WIRE SHELF @3'-4" & 6'-0" AFF.
5. SHELF ABOVE WASHER @ 5'-6" AFF.
6. MAINTAIN MIN. 3'-0" CLEAR BETWEEN FINISHES AND FURNITURE, TYP.
7. CENTER LIGHTING FIXTURE ABOVE LAVATORY.
8. WASHER BOX.
9. DRYER VENT.
10. COMBO WASHER / DRYER BOX
11. MOVABLE KITCHEN ISLAND
12. PROVIDE FAN RATED REINFORCED J-BOX
13. ATTIC ACCESS. TOP FLOOR UNITS ONLY.
14. WATER HEATER, SEE PLUMBING DRAWINGS.
15. ACCESS PANEL FOR MECH. UNIT.
16. FRAMELESS MIRROR.
17. WASHER.
18. DRYER.
19. STACKED WASHER/DRYER COMBO.
20. ICE MAKER CONNECTION.

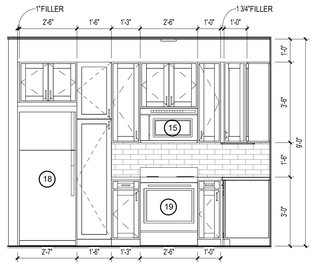

H3 UNIT 1B - ENLARGED ELEVATION
3/8" = 1'-0"

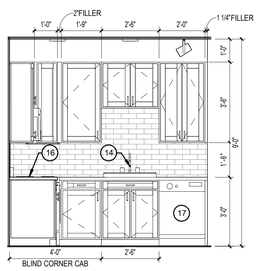

H2 UNIT 1B - ENLARGED ELEVATION
3/8" = 1'-0"

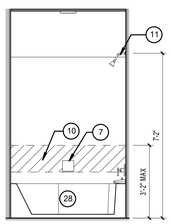

H1 UNIT 1B - ENLARGED ELEVATION
3/8" = 1'-0"

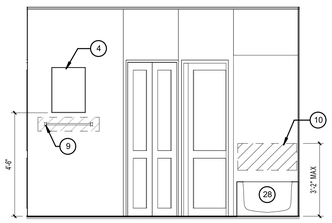

K4 UNIT A2 & B1- ENLARGED ELEVATION
3/8" = 1'-0"

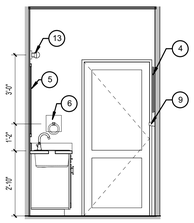

K3 UNIT 1B - ENLARGED ELEVATION
3/8" = 1'-0"

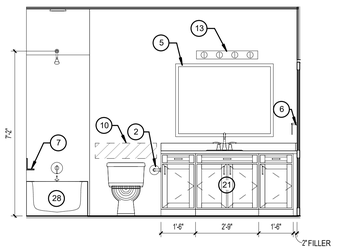

K2 UNIT 1B - ENLARGED ELEVATION
3/8" = 1'-0"

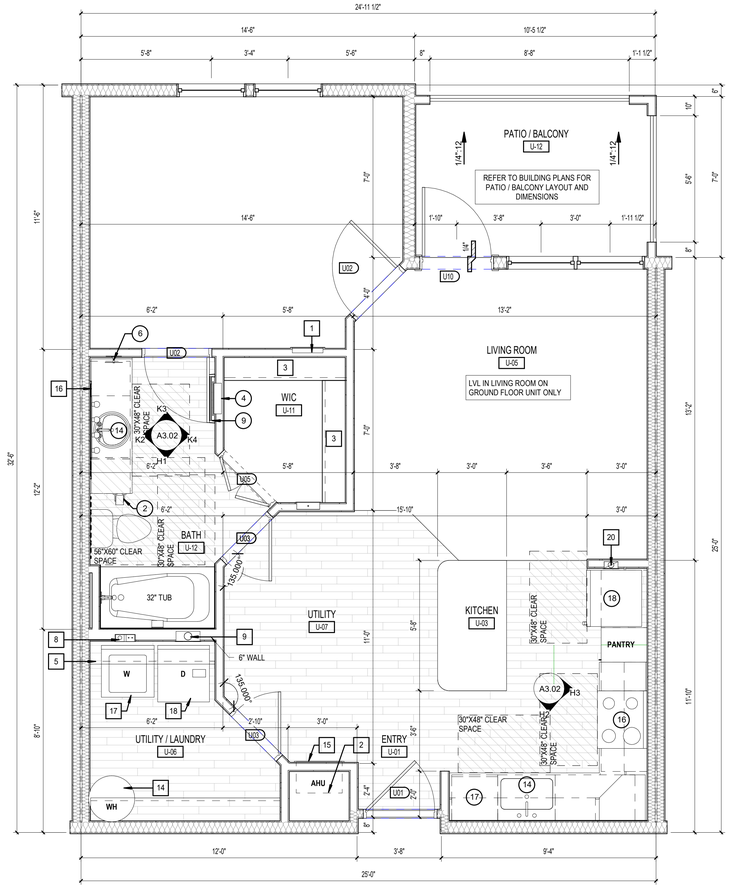

K1 UNIT 1B - DIMENSION & REFERENCE PLAN
3/8" = 1'-0"

ISSUE HISTORY

No.	Date	Description

REVISION HISTORY

No.	Date	Description

FUGLEBERG KOCH
2555 Temple Trail, Winter Park, FL 32789 (407) 629-0595
www.fuglebergkoch.com AA26002103

CONSULTANT

STATE OF ALABAMA MICHAEL E. GOFF 8234 4/15/22 REGISTERED ARCHITECT

THE ROBERT - MADISON	Drawn: MB
MADISON, ALABAMA	Checked: JK
	Approval: MG
	Date: 04/15/2022
	Project #: 5722
UNIT 1B - 1BR. UNIT PLAN	
A3.02	

© 2018 These documents and their contents are the property of FUGLEBERG KOCH - AA26002103, and are issued only for the specific project noted on these drawings. Any reproductions, reissue, or modifications of these documents without the expressed written consent of Fugleberg Koch is prohibited by law.

PLOTTED: 5/3/2022 3:08:50 PM

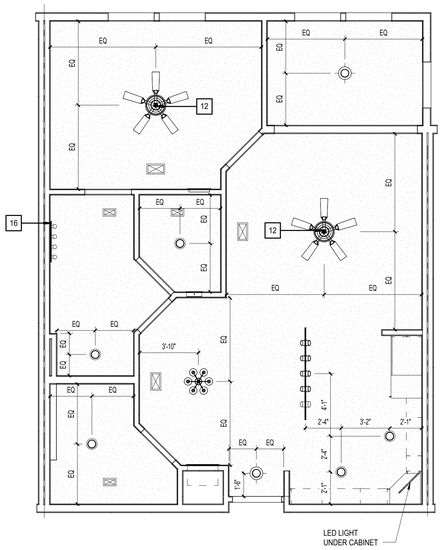

D1 UNIT 1Bs W/ SOLARIUM - RCP
1/4" = 1'-0"

RCP LEGEND - UNITS

	SMOKE DETECTOR
	LED FLUSH MOUNT - INTERIOR / EXTERIOR
	LED WALL MOUNT - INTERIOR
	PENDANT - CEILING MOUNTED
	LIGHT - WALL MOUNTED
	CEILING FAN - WITH LIGHT KIT
	MULTI FIXTURE VANITY LIGHT - WALL MOUNTED
	LED UNDER CABINET DOWNLIGHT
	SQUARE SUPPLY DIFFUSER - CEILING MOUNTED
	SQUARE RETURN DIFFUSER - CEILING MOUNTED
	SUPPLY DIFFUSER - WALL MOUNTED
	RETURN DIFFUSER - WALL MOUNTED
	ADA HORN/STROBE DEVICE - WALL MT.
	GYPSUM BOARD CEILING @ 9'-0"

NOTES:
1. RCP DIMS SHOWN ARE FROM FACE OF FINISH.
2. ALIGN UNDER CABINET LIGHTS WITH THE CENTER OF THE CABINET ABOVE.

LEGEND:

	CLEAR FLOOR SPACE
	LEVEL CHANGE
X	DENOTES BATHROOM ACCESSORY/KITCHEN APPLIANCE
	BATT INSULATION
ELEVATION / PLAN	DENOTES BLOCKING FOR FUTURE GRAB BARS. REFER TO FHA CLEARANCES FOR MORE INFO.

BATH & KITCHEN LEGEND: X

1. 18" TOWEL BAR
2. TOILET TISSUE HOLDER
3. CURVED SHOWER ROD
4. MEDICINE CABINET
5. MIRROR
6. HAND TOWEL RING
7. SOAP DISH
8. RECESSED CABINET ABOVE W.C.
9. 24" TOWEL BAR
10. GRAB BAR REINFORCEMENT, BTWN. 2'-6" MAX. A.F.F. & 3'-2" MIN. A.F.F.-((GRAB BARS TO BE INSTALLED IN ALL ANSI TYPE 'A' UNITS)
11. SHOWER HEAD
12. WATER CLOSET STD. HT.
13. LIGHT FIXTURE (SEE ELECTRICAL)
14. SINK
15. MICROWAVE
16. RANGE
17. DISHWASHER
18. REFRIGERATOR
19. OVEN
20. ANSI OVEN
21. VANITY CABINET W/SINK
22. 36" - TUB
23. EXHAUST FAN
24. 32" - TUB
25. 6X6 TILE
26. HAND HELD/FIXED SHOWER SPRAY UNIT WHOSE 60" MIN. LONG AND ADJUSTABLE BAR
27. REMOVABLE IN TUB SEAT
28. FIBERGLASS TUB W/ TILE SURROUND
29. GLASS SHOWER ENCLOSURE W/ TILE WALLS & ACRYLIC PRE-FABRICATED PAN.

UNIT 1Bs - Total Gross Area Schedule

Name	Area	Bedrooms	Baths	Den	Occupants
UNIT 1Bs	811 SF	1	1	1	
	811 SF				

UNIT 1Bs - Total Net Area

Unit Descriptor	Area	Bedrooms	Baths	Den
UNIT 1Bs	767 SF	1	1	
	767 SF			

GENERAL NOTES:

1. ALL DIMENSIONS ARE FROM OUTSIDE FACE OF STUD UNLESS NOTED OTHERWISE.
2. REFER TO EXTERIOR ELEVATIONS AND BUILDING PLANS FOR WINDOW TYPE.
3. CONTRACTOR TO FIELD VERIFY ALL DIMENSIONS. NOTIFY ARCHITECT OF ANY DISCREPANCIES.
4. REFER TO A3.30 - A3.52 FOR BALCONY PLANS SPECIFIC TO EACH UNIT AS IT OCCURS THROUGHOUT.
5. ALL PLUMBING WALLS NEED TO BE COORDINATED WITH PLUMBER TO DETERMINE 2X4 OR 2X6 CONSTRUCTION.
6. PROVIDE ONE 4-A: 10-B:C 5 lb FIRE EXTINGUISHER PER UNIT. LOCATE PER FIRE DEPARTMENT REQUIREMENTS.
7. PROVIDE ACOUSTICAL UNDERLAYMENT UNDERNEATH VINYL PLANK FLOORING LOCATIONS WITHIN UNITS ON ELEVATED FLOORS. REFER TO SPECIFICATIONS FOR APPROVED PRODUCT.
8. PROVIDE DISPOSER AT ALL KITCHEN SINKS. REFER TO PLANS FOR AIR SWITCH LOCATION, PLACE ON SAME SIDE AS DISPOSER.
9. CLOSET RODS:
   A. 12" DEEP. TOP OF SHELVING IN CLOSETS SHALL BE AT 3'-0" AND 6'-0", SEE PLANS
   B. 12" DEEP SHELVING AT PANTRIES & LINEN CLOSETS: 5 SHELVES EQUALLY SPACED @ 13" A PART (16", 29", 42", 55" AND 68").
   C. PROVIDE (5) 18" X 12" DEEP LINEN SHELVES EQUALLY SPACED AT BEDROOM/CLOSET ENDS WHERE INDICATED.
   D. SHELVING AT LAUNDRY ROOMS - 24" DEEP @ 5'-7". SHELVING AT ENTRY CLOSETS - 12" DEEP @ 6'-0".
10. KITCHEN OUTLETS SHALL BE SPACED PER NEC. FHA REQUIRES THAT OUTLETS BE PLACED NO LESS THAN 3'-0" FROM THE CORNER UNLESS AN ADDITIONAL OUTLET IS ADDED. KITCHEN ELEVATIONS INDICATE APPROXIMATE DIMENSIONS NEEDED TO MEET BOTH NEC AND FHA. 4'-0" O.C. MAX. BETWEEN OUTLETS SHALL BE PROVIDED AROUND A CORNER.
11. SEE SHEET A3.10 FOR STANDARD MOUNTING HEIGHTS AND DETAILS.
12. PROVIDE WINDOW-EASE OPENING DEVICE AT ACCESSIBLE UNIT OPERABLE WINDOWS (WWW.WINDOWEASE.COM).

UNIT KEYNOTES: X

1. ELECTRICAL PANEL. REFER TO ELECTRICAL DWGS.
2. HVAC UNIT. SEE MECHANICAL DRAWINGS.
3. WIRE SHELF & POLE @6'-0"
4. WIRE SHELF @3'-4" & 6'-0" AFF.
5. SHELF ABOVE WASHER @ 5'-6" AFF.
6. MAINTAIN MIN. 3'-0" CLEAR BETWEEN FINISHES AND FURNITURE, TYP.
7. CENTER LIGHTING FIXTURE ABOVE LAVATORY.
8. WASHER BOX.
9. DRYER VENT.
10. COMBO WASHER / DRYER BOX
11. MOVABLE KITCHEN ISLAND
12. PROVIDE FAN RATED REINFORCED J-BOX.
13. ATTIC ACCESS. TOP FLOOR UNITS ONLY.
14. WATER HEATER. SEE PLUMBING DRAWINGS.
15. ACCESS PANEL FOR MECH. UNIT.
16. FRAMELESS MIRROR.
17. WASHER.
18. DRYER.
19. STACKED WASHER/DRYER COMBO.
20. ICE MAKER CONNECTION.

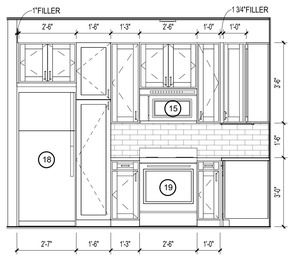

H3 UNIT 1Bs - ENLARGED ELEVATION
3/8" = 1'-0"

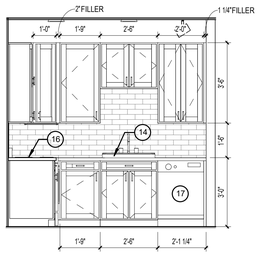

H2 UNIT 1Bs - ENLARGED ELEVATION
3/8" = 1'-0"

H1 UNIT 1Bs - ENLARGED ELEVATION
3/8" = 1'-0"

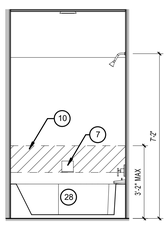

H4 UNIT 1Bs - ENLARGED ELEVATION
3/8" = 1'-0"

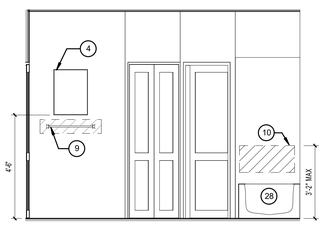

K3 UNIT 1Bs- ENLARGED ELEVATION
3/8" = 1'-0"

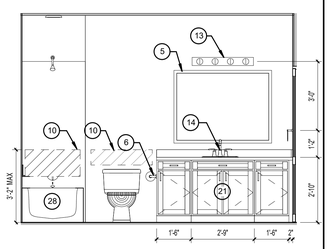

K2 UNIT 1Bs - ENLARGED ELEVATION
3/8" = 1'-0"

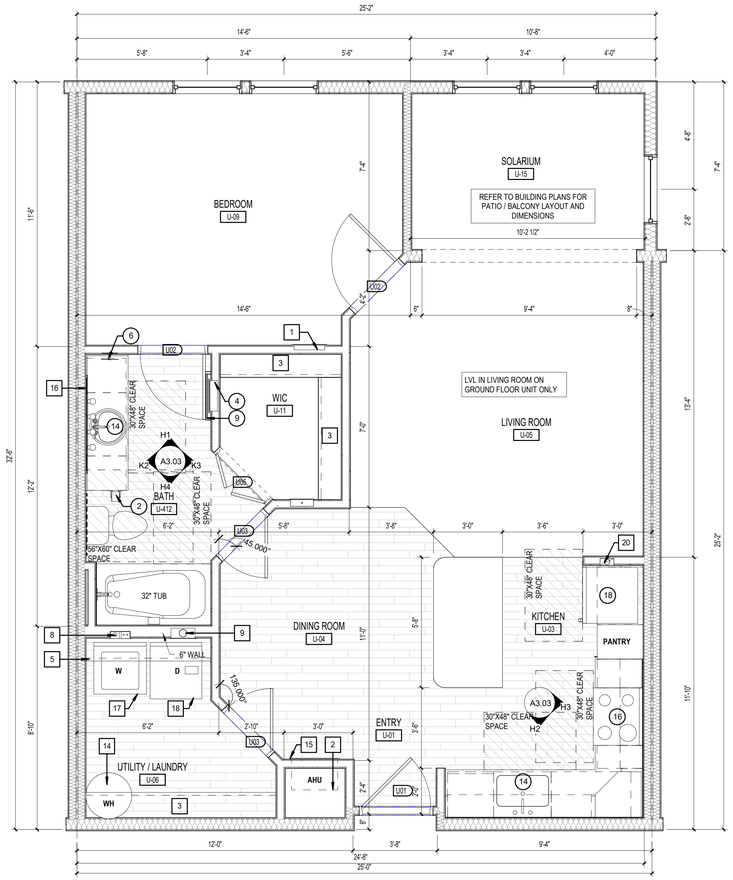

K1 UNIT 1Bs - w/ SOLARIUM - DIMENSION & REFERENCE PLAN
3/8" = 1'-0"

ISSUE HISTORY

No.	Date	Description

REVISION HISTORY

No.	Date	Description

FUGLEBERG KOCH
2555 Temple Trail, Winter Park, FL 32789 (407) 629-0595
www.fuglebergkoch.com AA26002103

CONSULTANT

STATE OF ALABAMA
MICHAEL E. GOFF
8234
4/15/22
REGISTERED ARCHITECT

Drawn:	MB
Checked:	JK
Approval:	MG
Date:	04/15/2022
Project #:	5722

THE ROBERT - MADISON
MADISON, ALABAMA

UNIT 1Bs - 1 BR WITH SOLARIUM

A3.03

© 2019 These documents and their contents are the property of FUGLEBERG KOCH, AA26002103, and are loaned only for the specific project noted on these drawings. Any reproductions, versions, or modifications of these documents without the expressed written consent of Fugleberg Koch is prohibited by law.

PLOTTED: 5/3/2022
3:08:54 PM

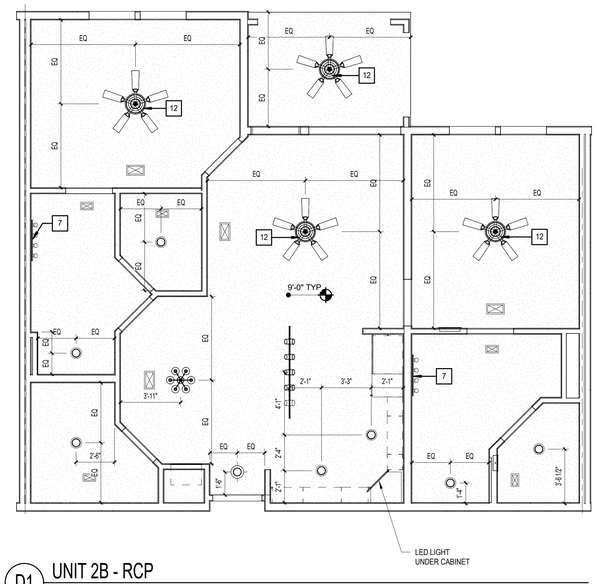

D1 UNIT 2B - RCP
1/4" = 1'-0"

RCP LEGEND - UNITS

	SMOKE DETECTOR
	LED FLUSH MOUNT - INTERIOR / EXTERIOR
	LED WALL MOUNT - INTERIOR
	PENDANT - CEILING MOUNTED
	LIGHT - WALL MOUNTED
	CEILING FAN - WITH LIGHT KIT
	MULTI FIXTURE VANITY LIGHT - WALL MOUNTED
	LED UNDER CABINET DOWNLIGHT
	SQUARE SUPPLY DIFFUSER - CEILING MOUNTED
	SQUARE RETURN DIFFUSER - CEILING MOUNTED
	SUPPLY DIFFUSER - WALL MOUNTED
	RETURN DIFFUSER - WALL MOUNTED
	ADA HORN/STROBE DEVICE - WALL MT.
	GYPSUM BOARD CEILING @ 9'-0"

NOTES:
1. RCP DIMS SHOWN ARE FROM FACE OF FINISH.
2. ALIGN UNDER CABINET LIGHTS WITH THE CENTER OF THE CABINET ABOVE.

LEGEND:

	CLEAR FLOOR SPACE
	LEVEL CHANGE
X	DENOTES BATHROOM ACCESSORY/KITCHEN APPLIANCE
	BATT INSULATION
ELEVATION / PLAN	DENOTES BLOCKING FOR FUTURE GRAB BARS. REFER TO FHA CLEARANCES FOR MORE INFO.

BATH & KITCHEN LEGEND: (X)

1. 18" TOWEL BAR
2. TOILET TISSUE HOLDER
3. CURVED SHOWER ROD
4. MEDICINE CABINET
5. MIRROR
6. HAND TOWEL RING
7. SOAP DISH
8. RECESSED CABINET ABOVE W.C.
9. 24" TOWEL BAR
10. GRAB BAR REINFORCEMENT, BTWN. 2'-6" MAX. A.F.F. & 3'-2" MIN. A.F.F.-(GRAB BARS TO BE INSTALLED IN ALL ANSI TYPE 'A' UNITS)
11. SHOWER HEAD
12. WATER CLOSET STD. HT.
13. LIGHT FIXTURE (SEE ELECTRICAL)
14. SINK
15. MICROWAVE
16. RANGE
17. DISHWASHER
18. REFRIGERATOR
19. OVEN
20. ANSI OVEN
21. VANITY CABINET W/SINK
22. 36" - TUB
23. EXHAUST FAN
24. 32" - TUB
25. 6X6 TILE
26. HAND HELD/FIXED SHOWER SPRAY UNIT W/HOSE 60" MIN. LONG AND ADJUSTABLE BAR
27. REMOVABLE IN TUB SEAT
28. FIBERGLASS TUB W/ TILE SURROUND
29. GLASS SHOWER ENCLOSURE W/ TILE WALLS & ACRYLIC PRE-FABRICATED PAN.

UNIT 2B - Total Gross Area Schedule

Name	Area	Bedrooms	Baths	Den	Occupants
UNIT 2B	1019 SF	2	2	1	
BALCONY	74 SF				
	1093 SF				

UNIT 2B - Total Net Area

Unit Descriptor	Area	Bedrooms	Baths	Den
UNIT 2B	972 SF	2	2	1
	972 SF			

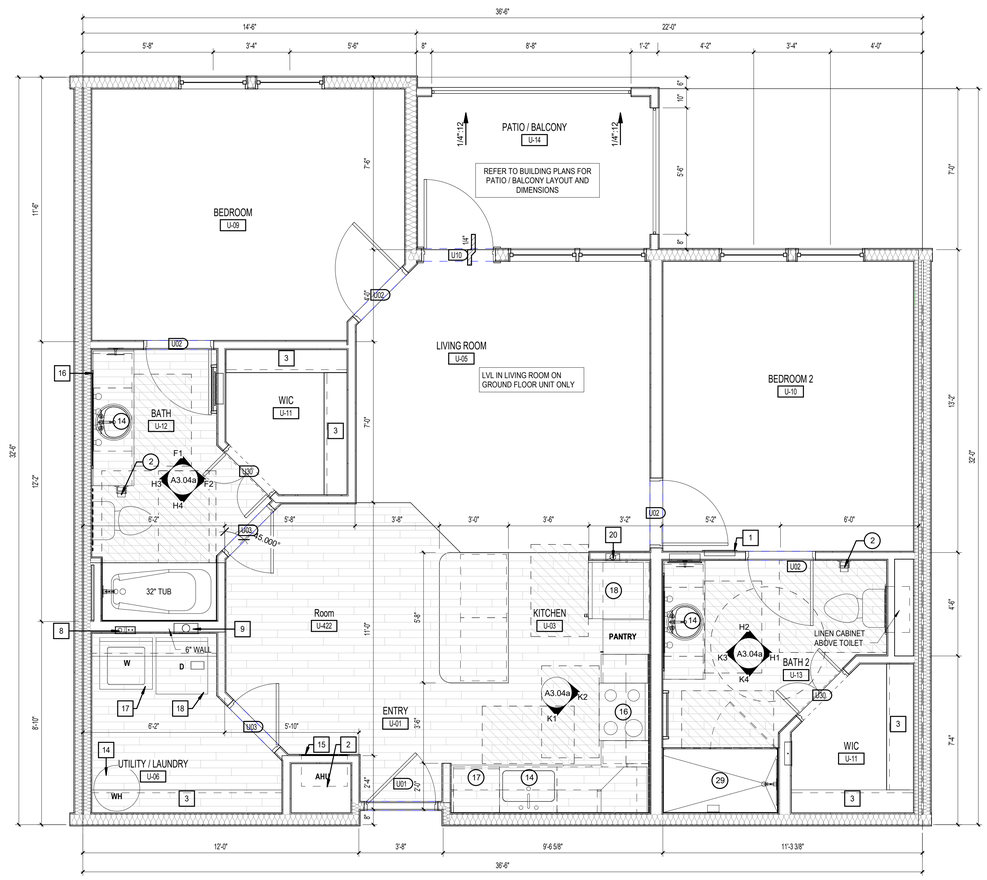

K1 UNIT 2B - DIMENSION & REFERENCE PLAN
3/8" = 1'-0"

GENERAL NOTES:

1. ALL DIMENSIONS ARE FROM OUTSIDE FACE OF STUD UNLESS NOTED OTHERWISE.
2. REFER TO EXTERIOR ELEVATIONS AND BUILDING PLANS FOR WINDOW TYPE.
3. CONTRACTOR TO FIELD VERIFY ALL DIMENSIONS. NOTIFY ARCHITECT OF ANY DISCREPANCIES.
4. REFER TO A3.30 - A3.52 FOR BALCONY PLANS SPECIFIC TO EACH UNIT AS IT OCCURS THROUGHOUT.
5. ALL PLUMBING WALLS NEED TO BE COORDINATED WITH PLUMBER TO DETERMINE 2X4 OR 2X6 CONSTRUCTION.
6. PROVIDE ONE 4-A. 10-B.C.5 lb FIRE EXTINGUISHER PER UNIT. LOCATE PER FIRE DEPARTMENT REQUIREMENTS.
7. PROVIDE ACOUSTICAL UNDERLAYMENT UNDERNEATH VINYL PLANK FLOORING LOCATIONS WITHIN UNITS ON ELEVATED FLOORS. REFER TO SPECIFICATIONS FOR APPROVED PRODUCT.
8. PROVIDE DISPOSER AT ALL KITCHEN SINKS. REFER TO PLANS FOR AIR SWITCH LOCATION. PLACE ON SAME SIDE AS DISPOSER.
9. CLOSET RODS:
   A. 12" DEEP, TOP OF SHELVING IN CLOSETS SHALL BE AT 3'-0" AND 6'-0", SEE PLANS
   B. 12" DEEP SHELVING AT PANTRIES & LINEN CLOSETS: 5 SHELVES EQUALLY SPACED @ 13" A PART (16", 29", 42", 55" AND 68").
   C. PROVIDE (5) 16" X 12" DEEP LINEN SHELVES EQUALLY SPACED AT BEDROOM/CLOSET ENDS WHERE INDICATED.
   D. SHELVING AT LAUNDRY ROOMS - 24" DEEP @ 5'-7". SHELVING AT ENTRY CLOSETS - 12" DEEP @ 6'-0".
10. KITCHEN OUTLETS SHALL BE SPACED PER NEC. FHA REQUIRES THAT OUTLETS BE PLACED NO LESS THAN 3'-0" FROM THE CORNER UNLESS AN ADDITIONAL OUTLET IS ADDED. KITCHEN ELEVATIONS INDICATE APPROXIMATE DIMENSIONS NEEDED TO MEET BOTH NEC AND FHA, 4'-0" O.C. MAX. BETWEEN OUTLETS SHALL BE PROVIDED AROUND A CORNER.
11. SEE SHEET A3.10 FOR STANDARD MOUNTING HEIGHTS AND DETAILS.
12. PROVIDE WINDOW-EASE OPENING DEVICE AT ACCESSIBLE UNIT OPERABLE WINDOWS (WWW.WINDOWEASE.COM).

UNIT KEYNOTES: (X)

1. ELECTRICAL PANEL. REFER TO ELECTRICAL DWGS.
2. HVAC UNIT, SEE MECHANICAL DRAWINGS.
3. WIRE SHELF & POLE @6'-0"
4. WIRE SHELF @3'-4" & 6'-0" AFF.
5. SHELF ABOVE WASHER @ 5'-6" AFF.
6. MAINTAIN MIN. 3'-0" CLEAR BETWEEN FINISHES AND FURNITURE, TYP.
7. CENTER LIGHTING FIXTURE ABOVE LAVATORY.
8. WASHER BOX.
9. DRYER VENT.
10. COMBO WASHER / DRYER BOX
11. MOVABLE KITCHEN ISLAND
12. PROVIDE FAN RATED REINFORCED J-BOX
13. ATTIC ACCESS. TOP FLOOR UNITS ONLY.
14. WATER HEATER, SEE PLUMBING DRAWINGS.
15. ACCESS PANEL FOR MECH. UNIT.
16. FRAMELESS MIRROR.
17. WASHER.
18. DRYER.
19. STACKED WASHER/DRYER COMBO.
20. ICE MAKER CONNECTION.

ISSUE HISTORY

No.	Date	Description

REVISION HISTORY

No.	Date	Description

FUGLEBERG KOCH
2555 Temple Trail, Winter Park, FL 32789 (407) 629-9395
www. fuglebergkoch.com AA26002103

CONSULTANT

STATE OF ALABAMA
MICHAEL E. GOVE
8234
4/15/22
REGISTERED ARCHITECT

THE ROBERT - MADISON MADISON, ALABAMA	Drawn: MB Checked: JK Approval: MG Date: 04/15/2022 Project #: 5722
UNIT 2B - 2BR UNIT PLAN	
A3.04	

© 2018 These drawings and these contents are the property of FUGLEBERG KOCH - AA26002103. and are issued only for the project shown. Any reproductions, revisions, or modifications of these documents without the expressed written consent of Fugleberg Koch is prohibited by law.

PLOTTED: 9/3/2022 3:08:57 PM

BATH & KITCHEN LEGEND: (X)

1. 18" TOWEL BAR
2. TOILET TISSUE HOLDER
3. CURVED SHOWER ROD
4. MEDICINE CABINET
5. MIRROR
6. HAND TOWEL RING
7. SOAP DISH
8. RECESSED CABINET ABOVE W.C.
9. 24" TOWEL BAR
10. GRAB BAR REINFORCEMENT, BTWN. 2'-6" MAX. A.F.F. & 3'-2" MIN. A.F.F.-(GRAB BARS TO BE INSTALLED IN ALL ANSI TYPE 'A' UNITS)
11. SHOWER HEAD
12. WATER CLOSET STD. HT.
13. LIGHT FIXTURE (SEE ELECTRICAL)
14. SINK
15. MICROWAVE
16. RANGE
17. DISHWASHER
18. REFRIGERATOR
19. OVEN
20. ANSI OVEN
21. VANITY CABINET W/SINK
22. 36" - TUB
23. EXHAUST FAN
24. 32" - TUB
25. 6X6 TILE
26. HAND HELD/FIXED SHOWER SPRAY UNIT W/HOSE 60" MIN. LONG AND ADJUSTABLE BAR
27. REMOVABLE IN TUB SEAT
28. FIBERGLASS TUB W/ TILE SURROUND
29. GLASS SHOWER ENCLOSURE W/ TILE WALLS & ACRYLIC PRE-FABRICATED PAN.

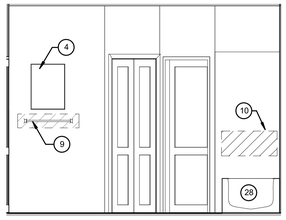

F2 UNIT 2B - ENLARGED ELEVATION
3/8" = 1'-0"

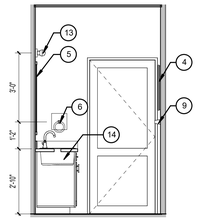

F1 UNIT 2B - ENLARGED ELEVATION
3/8" = 1'-0"

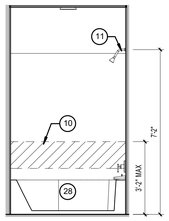

H4 UNIT 2B - ENLARGED ELEVATION
3/8" = 1'-0"

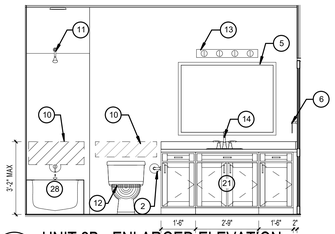

H3 UNIT 2B - ENLARGED ELEVATION
3/8" = 1'-0"

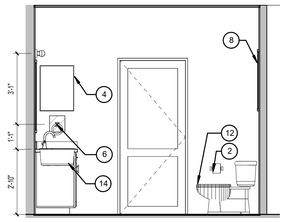

H2 UNIT 2B - ENLARGED ELEVATION
3/8" = 1'-0"

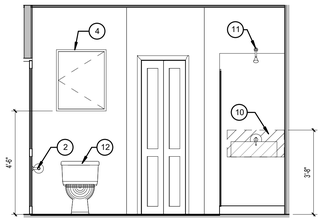

H1 UNIT 2B - ENLARGED ELEVATION
3/8" = 1'-0"

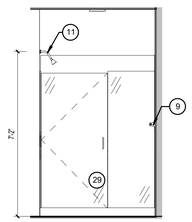

K4 UNIT 2B - ENLARGED ELEVATION
3/8" = 1'-0"

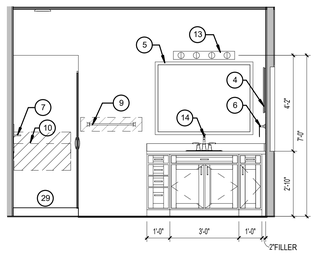

K3 UNIT 2B - ENLARGED ELEVATION
3/8" = 1'-0"

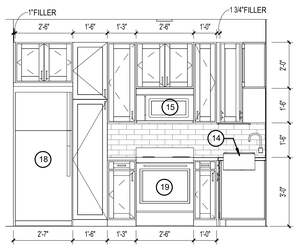

K2 UNIT 2B - ENLARGED ELEVATION
3/8" = 1'-0"

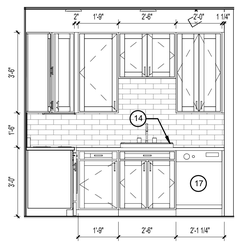

K1 UNIT 2B - ENLARGED ELEVATION
3/8" = 1'-0"

ISSUE HISTORY

No.	Date	Description

REVISION HISTORY

No.	Date	Description

FUGLEBERG KOCH
2555 Temple Trail, Winter Park, FL 32789 (407) 629-0595
www.fuglebergkoch.com AA26002103

CONSULTANT

STATE OF ALABAMA
MICHAEL E. GOYE
8234
4/15/22
REGISTERED ARCHITECT

THE ROBERT - MADISON
MADISON, ALABAMA

Drawn:	MB
Checked:	JK
Approval:	MG
Date:	04/15/2022
Project #:	5722

UNIT 2B - 2BR UNIT PLAN

A3.04a

PLOTTED: 5/3/2022 3:08:59 PM

© 2018 These documents and their contents are the property of FUGLEBERG KOCH - AA26002103, and are issued only for the specific project noted on these drawings. Any reproductions, revisions, or modifications of these documents without the expressed written consent of Fugleberg Koch is prohibited by law.

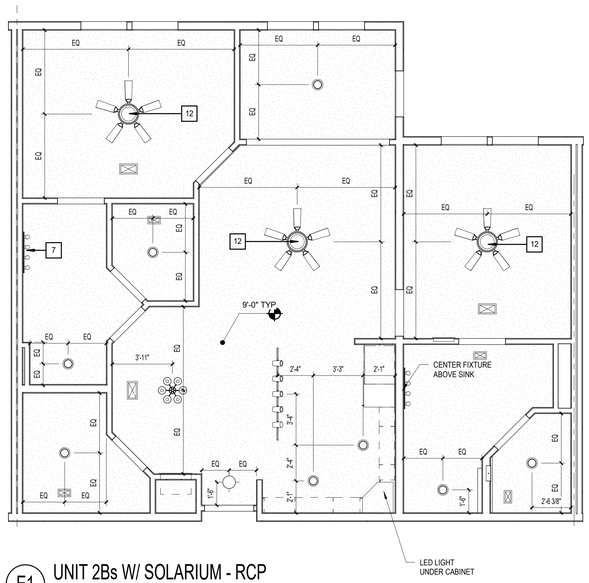

E1 UNIT 2Bs W/ SOLARIUM - RCP
1/4" = 1'-0"

RCP LEGEND - UNITS

	SMOKE DETECTOR
	LED FLUSH MOUNT - INTERIOR / EXTERIOR
	LED WALL MOUNT - INTERIOR
	PENDANT - CEILING MOUNTED
	LIGHT - WALL MOUNTED
	CEILING FAN - WITH LIGHT KIT
	MULTI FIXTURE VANITY LIGHT - WALL MOUNTED
	LED UNDER CABINET DOWNLIGHT
	SQUARE SUPPLY DIFFUSER - CEILING MOUNTED
	SQUARE RETURN DIFFUSER - CEILING MOUNTED
	SUPPLY DIFFUSER - WALL MOUNTED
	RETURN DIFFUSER - WALL MOUNTED
	ADA HORN/STROBE DEVICE - WALL MT.
	GYPSUM BOARD CEILING @ 9'-0"

NOTES:
1. RCP DIMS SHOWN ARE FROM FACE OF FINISH.
2. ALIGN UNDER CABINET LIGHTS WITH THE CENTER OF THE CABINET ABOVE.

LEGEND:

	CLEAR FLOOR SPACE
	LEVEL CHANGE
X	DENOTES BATHROOM ACCESSORY/KITCHEN APPLIANCE
	BATT INSULATION
ELEVATION / PLAN	DENOTES BLOCKING FOR FUTURE GRAB BARS. REFER TO FHA CLEARANCES FOR MORE INFO.

BATH & KITCHEN LEGEND: (X)

1. 18" TOWEL BAR
2. TOILET TISSUE HOLDER
3. CURVED SHOWER ROD
4. MEDICINE CABINET
5. MIRROR
6. HAND TOWEL RING
7. SOAP DISH
8. RECESSED CABINET ABOVE W.C.
9. 24" TOWEL BAR
10. GRAB BAR REINFORCEMENT, BTWN. 2'-6" MAX. A.F.F. & 3'-2" MIN. A.F.F.-(GRAB BARS TO BE INSTALLED IN ALL ANSI TYPE 'A' UNITS)
11. SHOWER HEAD
12. WATER CLOSET STD. HT.
13. LIGHT FIXTURE (SEE ELECTRICAL)
14. SINK
15. MICROWAVE
16. RANGE
17. DISHWASHER
18. REFRIGERATOR
19. OVEN
20. ANSI OVEN
21. VANITY CABINET W/SINK
22. 36" - TUB
23. EXHAUST FAN
24. 32" - TUB
25. 6X6 TILE
26. HAND HELD/FIXED SHOWER SPRAY UNIT W/HOSE 60" MIN. LONG AND ADJUSTABLE BAR
27. REMOVABLE IN TUB SEAT
28. FIBERGLASS TUB W/ TILE SURROUND
29. GLASS SHOWER ENCLOSURE W/ TILE WALLS & ACRYLIC PRE-FABRICATED PAN.

UNIT 2Bs - Total Gross Area Schedule

Name	Area	Bedrooms	Baths	Den	Occupants
UNIT 2Bs	1099 SF	2	2		
	1099 SF				

UNIT 2Bs - Total Net Area

Unit Descriptor	Area	Bedrooms	Baths	Den
UNIT 2Bs	1,049 SF	1	1	
	1,049 SF			

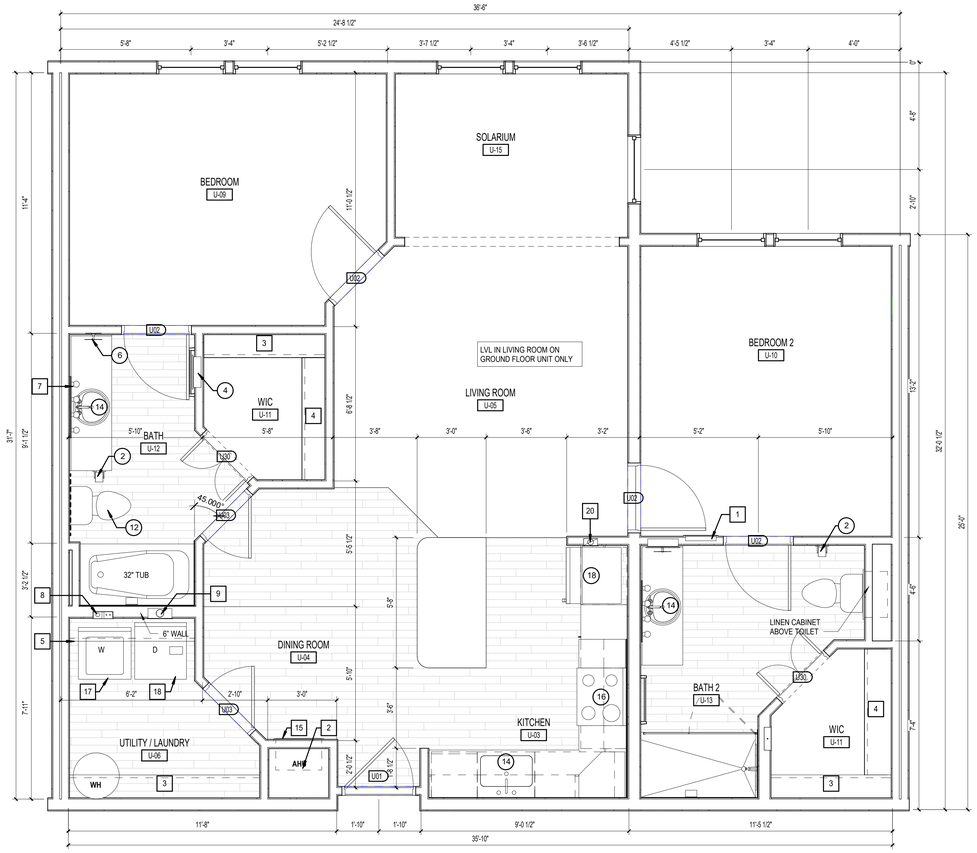

1 UNIT 2Bs - w/ SOLARIUM - DIMENSION & REFERENCE PLAN
3/8" = 1'-0"

GENERAL NOTES:

1. ALL DIMENSIONS ARE FROM OUTSIDE FACE OF STUD UNLESS NOTED OTHERWISE.
2. REFER TO EXTERIOR ELEVATIONS AND BUILDING PLANS FOR WINDOW TYPE.
3. CONTRACTOR TO FIELD VERIFY ALL DIMENSIONS. NOTIFY ARCHITECT OF ANY DISCREPANCIES.
4. REFER TO A3.30 - A3.52 FOR BALCONY PLANS SPECIFIC TO EACH UNIT AS IT OCCURS THROUGHOUT.
5. ALL PLUMBING WALLS NEED TO BE COORDINATED WITH PLUMBER TO DETERMINE 2X4 OR 2X6 CONSTRUCTION.
6. PROVIDE ONE 4-A: 10-B:C 5 lb FIRE EXTINGUISHER PER UNIT. LOCATE PER FIRE DEPARTMENT REQUIREMENTS.
7. PROVIDE ACOUSTICAL UNDERLAYMENT UNDERNEATH VINYL PLANK FLOORING LOCATIONS WITHIN UNITS ON ELEVATED FLOORS. REFER TO SPECIFICATIONS FOR APPROVED PRODUCT.
8. PROVIDE DISPOSER AT ALL KITCHEN SINKS, REFER TO PLANS FOR AIR SWITCH LOCATION, PLACE ON SAME SIDE AS DISPOSER.
9. CLOSET RODS:
   A. 12" DEEP. TOP OF SHELVING IN CLOSETS SHALL BE AT 3'-0" AND 6'-0", SEE PLANS
   B. 12" DEEP SHELVING AT PANTRIES & LINEN CLOSETS: 5 SHELVES EQUALLY SPACED @ 13" A PART (16", 29", 42", 55" AND 68").
   C. PROVIDE (5) 18" X 12" DEEP LINEN SHELVES EQUALLY SPACED AT BEDROOM/CLOSET ENDS WHERE INDICATED.
   D. SHELVING AT LAUNDRY ROOMS - 24" DEEP @ 5'-7". SHELVING AT ENTRY CLOSETS - 12" DEEP @ 6'-0".
10. KITCHEN OUTLETS SHALL BE SPACED PER NEC. FHA REQUIRES THAT OUTLETS BE PLACED NO LESS THAN 3'-0" FROM THE CORNER UNLESS AN ADDITIONAL OUTLET IS ADDED. KITCHEN ELEVATIONS INDICATE APPROXIMATE DIMENSIONS NEEDED TO MEET BOTH NEC AND FHA. 4'-0" O.C. MAX. BETWEEN OUTLETS SHALL BE PROVIDED AROUND A CORNER.
11. SEE SHEET A3.10 FOR STANDARD MOUNTING HEIGHTS AND DETAILS.
12. PROVIDE WINDOW-EASE OPENING DEVICE AT ACCESSIBLE UNIT OPERABLE WINDOWS (WWW.WINDOWEASE.COM).

UNIT KEYNOTES: (X)

1. ELECTRICAL PANEL. REFER TO ELECTRICAL DWGS.
2. HVAC UNIT, SEE MECHANICAL DRAWINGS.
3. WIRE SHELF & POLE @6'-0"
4. WIRE SHELF @3'-4" & 6'-0" AFF.
5. SHELF ABOVE WASHER @ 5'-6" AFF.
6. MAINTAIN MIN. 3'-0" CLEAR BETWEEN FINISHES AND FURNITURE, TYP.
7. CENTER LIGHTING FIXTURE ABOVE LAVATORY.
8. WASHER BOX.
9. DRYER VENT.
10. COMBO WASHER / DRYER BOX
11. MOVABLE KITCHEN ISLAND
12. PROVIDE FAN RATED REINFORCED J-BOX
13. ATTIC ACCESS, TOP FLOOR UNITS ONLY.
14. WATER HEATER, SEE PLUMBING DRAWINGS.
15. ACCESS PANEL FOR MECH. UNIT.
16. FRAMELESS MIRROR.
17. WASHER.
18. DRYER.
19. STACKED WASHER/DRYER COMBO.
20. ICE MAKER CONNECTION.

ISSUE HISTORY

No.	Date	Description

REVISION HISTORY

No.	Date	Description

FUGLEBERG KOCH
2555 Temple Trail, Winter Park, FL 32789 (407) 629-0595
www. fuglebergkoch.com AA26002103

CONSULTANT

STATE OF ALABAMA
MICHAEL E. JONES
8234
4/15/22
REGISTERED ARCHITECT

THE ROBERT - MADISON	Drawn: MB
MADISON, ALABAMA	Checked: JK
	Approval: MG
	Date: 04/15/2022
	Project #: 5722

UNIT 2Bs - 2BR WITH SOLARIUM

A3.05

© 2019 These documents and their contents are the property of FUGLEBERG KOCH - AA26002103, and are issued only for the specific project noted on these drawings. Any reproductions, reissue, or modifications of these documents without the expressed written consent of Fugleberg Koch is prohibited by law.

PLOTTED: 5/3/2022
3:09:03 PM

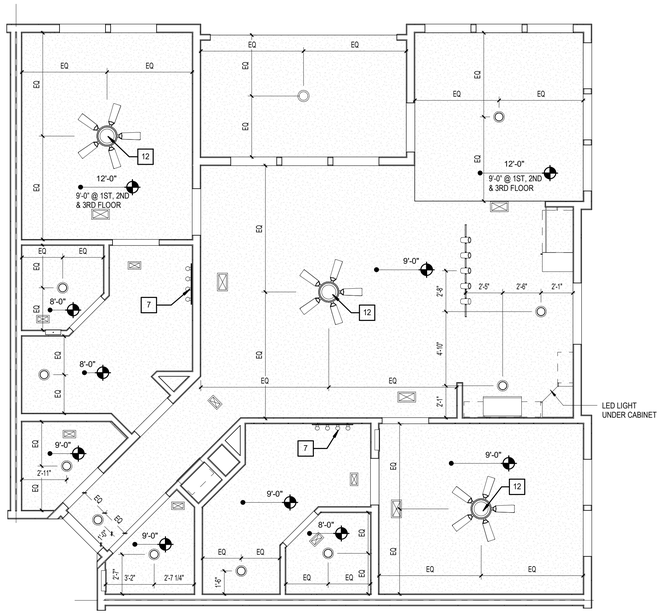

D1 UNIT 2C - CARRIAGE HOUSE - RCP

1/4" = 1'-0"

RCP LEGEND - UNITS

	SMOKE DETECTOR
	LED FLUSH MOUNT - INTERIOR / EXTERIOR
	LED WALL MOUNT - INTERIOR
	PENDANT - CEILING MOUNTED
	LIGHT - WALL MOUNTED
	CEILING FAN - WITH LIGHT KIT
	MULTI FIXTURE VANITY LIGHT - WALL MOUNTED
	LED UNDER CABINET DOWNLIGHT
	SQUARE SUPPLY DIFFUSER - CEILING MOUNTED
	SQUARE RETURN DIFFUSER - CEILING MOUNTED
	SUPPLY DIFFUSER - WALL MOUNTED
	RETURN DIFFUSER - WALL MOUNTED
	ADA HORN/STROBE DEVICE - WALL MT.
	GYPSUM BOARD CEILING @ 9'-0"

NOTES:
1. RCP DIMS SHOWN ARE FROM FACE OF FINISH.
2. ALIGN UNDER CABINET LIGHTS WITH THE CENTER OF THE CABINET ABOVE.

LEGEND:

	CLEAR FLOOR SPACE
	LEVEL CHANGE
X	DENOTES BATHROOM ACCESSORY/KITCHEN APPLIANCE
	BATT INSULATION
ELEVATION / PLAN	DENOTES BLOCKING FOR FUTURE GRAB BARS. REFER TO FHA CLEARANCES FOR MORE INFO.

BATH & KITCHEN LEGEND: X

1. 18" TOWEL BAR
2. TOILET TISSUE HOLDER
3. CURVED SHOWER ROD
4. MEDICINE CABINET
5. MIRROR
6. HAND TOWEL RING
7. SOAP DISH
8. RECESSED CABINET ABOVE W.C.
9. 24" TOWEL BAR
10. GRAB BAR REINFORCEMENT, BTWN. 2'-6" MAX. A.F.F. & 3'-2" MIN. A.F.F.-(GRAB BARS TO BE INSTALLED IN ALL ANSI TYPE 'A' UNITS)
11. SHOWER HEAD
12. WATER CLOSET STD. HT.
13. LIGHT FIXTURE (SEE ELECTRICAL)
14. SINK
15. MICROWAVE
16. RANGE
17. DISHWASHER
18. REFRIGERATOR
19. OVEN
20. ANSI OVEN
21. VANITY CABINET W/SINK
22. 36" - TUB
23. EXHAUST FAN
24. 32" - TUB
25. 6X6 TILE
26. HAND HELD/FIXED SHOWER SPRAY UNIT W/HOSE 60" MIN. LONG AND ADJUSTABLE BAR
27. REMOVABLE IN TUB SEAT
28. FIBERGLASS TUB W/ TILE SURROUND
29. GLASS SHOWER ENCLOSURE W/ TILE WALLS & ACRYLIC PRE-FABRICATED PAN.

UNIT 2C - Total Gross Area Schedule

Name	Area	Bedrooms	Baths	Den	Occupants
UNIT 2C	1255 SF	2	2		
BALCONY	108 SF				
	1363 SF				

UNIT 2C - Total Net Area

Unit Descriptor	Area	Bedrooms	Baths	Den
UNIT 2C	1,189 SF	2	2	
	1,189 SF			

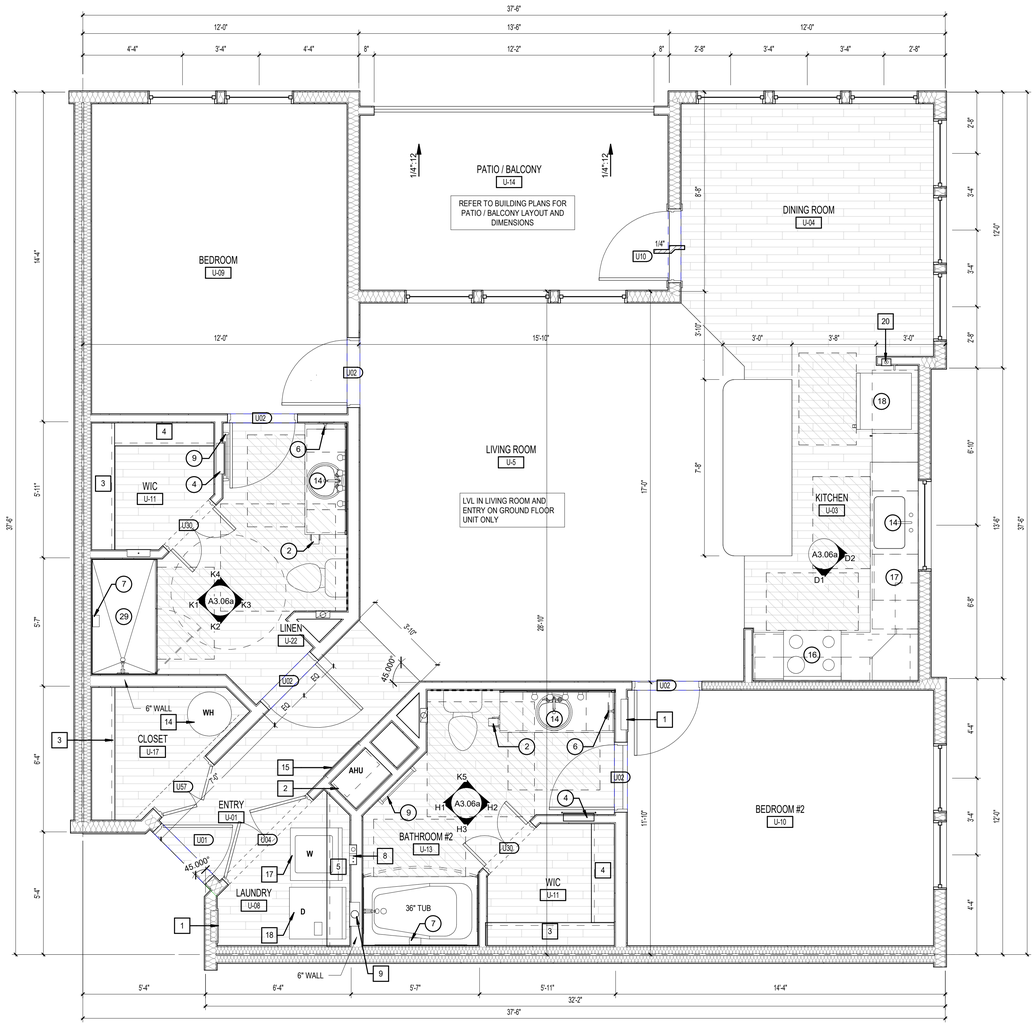

1 UNIT 2C - DIMENSIONS & REFERENCE PLAN

3/8" = 1'-0"

GENERAL NOTES:

1. ALL DIMENSIONS ARE FROM OUTSIDE FACE OF STUD UNLESS NOTED OTHERWISE.
2. REFER TO EXTERIOR ELEVATIONS AND BUILDING PLANS FOR WINDOW TYPE.
3. CONTRACTOR TO FIELD VERIFY ALL DIMENSIONS. NOTIFY ARCHITECT OF ANY DISCREPANCIES.
4. REFER TO A3.30 - A3.52 FOR BALCONY PLANS SPECIFIC TO EACH UNIT AS IT OCCURS THROUGHOUT.
5. ALL PLUMBING WALLS NEED TO BE COORDINATED WITH PLUMBER TO DETERMINE 2X4 OR 2X6 CONSTRUCTION.
6. PROVIDE ONE 4-A: 10-B:C 5 lb FIRE EXTINGUISHER PER UNIT. LOCATE PER FIRE DEPARTMENT REQUIREMENTS.
7. PROVIDE ACOUSTICAL UNDERLAYMENT UNDERNEATH VINYL PLANK FLOORING LOCATIONS WITHIN UNITS ON ELEVATED FLOORS. REFER TO SPECIFICATIONS FOR APPROVED PRODUCT.
8. PROVIDE DISPOSER AT ALL KITCHEN SINKS, REFER TO PLANS FOR AIR SWITCH LOCATION, PLACE ON SAME SIDE AS DISPOSER.
9. CLOSET RODS:
   A. 12" DEEP, TOP OF SHELVING IN CLOSETS SHALL BE AT 3'-0" AND 6'-0", SEE PLANS
   B. 12" DEEP SHELVING AT PANTRIES & LINEN CLOSETS: 5 SHELVES EQUALLY SPACED @ 13" A PART (16", 29", 42", 55" AND 68").
   C. PROVIDE (5) 18" X 12" DEEP LINEN SHELVES EQUALLY SPACED AT BEDROOM/CLOSET ENDS WHERE INDICATED.
   D. SHELVING AT LAUNDRY ROOMS - 24" DEEP @ 5'-7". SHELVING AT ENTRY CLOSETS - 12" DEEP @ 6'-0".
10. KITCHEN OUTLETS SHALL BE SPACED PER NEC. FHA REQUIRES THAT OUTLETS BE PLACED NO LESS THAN 3'-0" FROM THE CORNER UNLESS AN ADDITIONAL OUTLET IS ADDED. KITCHEN ELEVATIONS INDICATE APPROXIMATE DIMENSIONS NEEDED TO MEET BOTH NEC AND FHA. 4'-0" O.C. MAX. BETWEEN OUTLETS SHALL BE PROVIDED AROUND A CORNER.
11. SEE SHEET A3.10 FOR STANDARD MOUNTING HEIGHTS AND DETAILS.
12. PROVIDE WINDOW-EASE OPENING DEVICE AT ACCESSIBLE UNIT OPERABLE WINDOWS (WWW.WINDOWEASE.COM).

UNIT KEYNOTES: X

1. ELECTRICAL PANEL. REFER TO ELECTRICAL DWGS.
2. HVAC UNIT, SEE MECHANICAL DRAWINGS.
3. WIRE SHELF & POLE @6'-0"
4. WIRE SHELF @3'-4" & 6'-0" AFF.
5. SHELF ABOVE WASHER @ 5'-6" AFF.
6. MAINTAIN MIN. 3'-0" CLEAR BETWEEN FINISHES AND FURNITURE. TYP.
7. CENTER LIGHTING FIXTURE ABOVE LAVATORY.
8. WASHER BOX.
9. DRYER VENT.
10. COMBO WASHER / DRYER BOX
11. MOVABLE KITCHEN ISLAND
12. PROVIDE FAN RATED REINFORCED J-BOX
13. ATTIC ACCESS, TOP FLOOR UNITS ONLY.
14. WATER HEATER, SEE PLUMBING DRAWINGS.
15. ACCESS PANEL FOR MECH. UNIT.
16. FRAMELESS MIRROR.
17. WASHER.
18. DRYER.
19. STACKED WASHER/DRYER COMBO.
20. ICE MAKER CONNECTION.

ISSUE HISTORY

No.	Date	Description

REVISION HISTORY

No.	Date	Description

FUGLEBERG KOCH
2555 Temple Trail, Winter Park, FL 32789 (407) 629-8595
www.fugleberg koch.com AA26002103

CONSULTANT

STATE OF ALABAMA
MICHAEL E. GOFF
8234
4/15/22
REGISTERED ARCHITECT

Drawn:	MB
Checked:	JK
Approval:	MG
Date:	04/15/2022
Project #:	5722

THE ROBERT - MADISON

MADISON, ALABAMA

UNIT 2C - 2BR UNIT PLAN

A3.06

PLOTTED: 5/3/2022 3:09:07 PM

© 2018 These documents and their contents are the property of FUGLEBERG KOCH - AA26002103 and are to be used only for the specific project noted on these drawings. Any reproductions, versions, or modifications of these documents without the expressed written consent of Fugleberg Koch is prohibited by law.

BATH & KITCHEN LEGEND: (x)

1. 18" TOWEL BAR
2. TOILET TISSUE HOLDER
3. CURVED SHOWER ROD
4. MEDICINE CABINET
5. MIRROR
6. HAND TOWEL RING
7. SOAP DISH
8. RECESSED CABINET ABOVE W.C.
9. 24" TOWEL BAR
10. GRAB BAR REINFORCEMENT, BTWN. 2'-6" MAX. A.F.F. & 3'-2" MIN. A.F.F.-(GRAB BARS TO BE INSTALLED IN ALL ANSI TYPE 'A' UNITS)
11. SHOWER HEAD
12. WATER CLOSET STD. HT.
13. LIGHT FIXTURE (SEE ELECTRICAL)
14. SINK
15. MICROWAVE
16. RANGE
17. DISHWASHER
18. REFRIGERATOR
19. OVEN
20. ANSI OVEN
21. VANITY CABINET W/SINK
22. 36" - TUB
23. EXHAUST FAN
24. 32" - TUB
25. 6X6 TILE
26. HAND HELD/FIXED SHOWER SPRAY UNIT W/HOSE 60" MIN. LONG AND ADJUSTABLE BAR
27. REMOVABLE IN TUB SEAT
28. FIBERGLASS TUB W/ TILE SURROUND
29. GLASS SHOWER ENCLOSURE W/ TILE WALLS & ACRYLIC PRE-FABRICATED PAN.

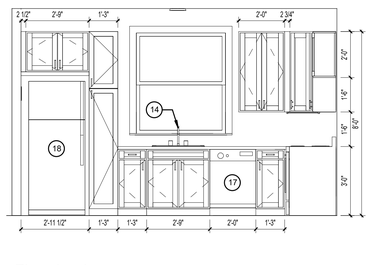

D2 Elevation 1 - c
3/8" = 1'-0"

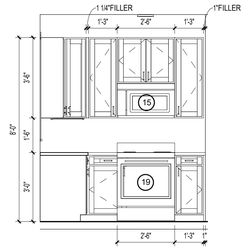

D1 Elevation 1 - d
3/8" = 1'-0"

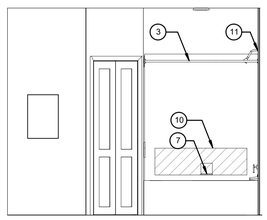

H3 UNIT 2B - ENLARGED ELEVATION
3/8" = 1'-0"

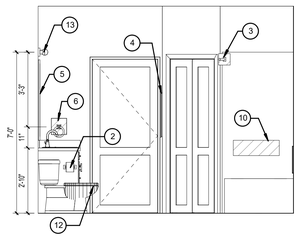

H2 UNIT 2B - ENLARGED ELEVATION
3/8" = 1'-0"

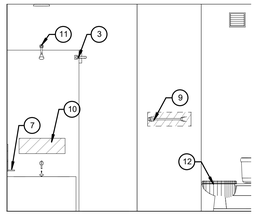

H1 UNIT 2B - ENLARGED ELEVATION
3/8" = 1'-0"

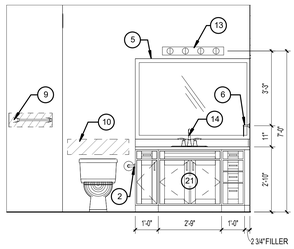

K5 UNIT 2B - ENLARGED ELEVATION
3/8" = 1'-0"

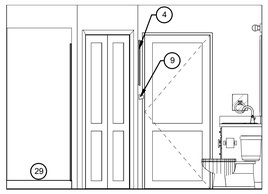

K4 UNIT 2B - ENLARGED ELEVATION
3/8" = 1'-0"

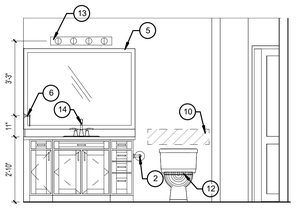

K3 UNIT 2B - ENLARGED ELEVATION
3/8" = 1'-0"

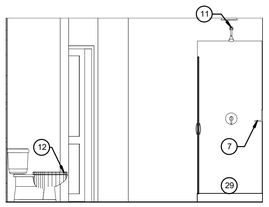

K2 UNIT 2B - ENLARGED ELEVATION
3/8" = 1'-0"

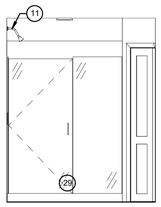

K1 UNIT 2B - ENLARGED ELEVATION
3/8" = 1'-0"

ISSUE HISTORY

No.	Date	Description

REVISION HISTORY

No.	Date	Description

FUGLEBERG KOCH
2555 Temple Trail, Winter Park, FL 32789 (407) 629-0595
www.fuglebergkoch.com AA26002103

CONSULTANT

STATE OF ALABAMA
MICHAEL E. GOFF
8234
4/15/22
REGISTERED ARCHITECT

THE ROBERT - MADISON MADISON, ALABAMA	Drawn: MB Checked: JK Approval: MG Date: 04/15/2022 Project #: 5722
UNIT 2B - 2 BR UNIT PLAN	
A3.06a	

PLOTTED: 5/3/2022
3:09:10 PM

© 2015 These documents and their contents are the property of FUGLEBERG KOCH - ARCHITECTS, and are issued only for the specific project noted on these drawings. Any reproductions, extensions, or modifications of these documents without the expressed written consent of Fugleberg Koch is prohibited by law.

LEGEND:

	CLEAR FLOOR SPACE
	LEVEL CHANGE
X	DENOTES BATHROOM ACCESSORY/KITCHEN APPLIANCE
	BATT INSULATION
ELEVATION / PLAN	DENOTES BLOCKING FOR FUTURE GRAB BARS. REFER TO FHA CLEARANCES FOR MORE INFO.

BATH & KITCHEN LEGEND: (X)

1. 18" TOWEL BAR
2. TOILET TISSUE HOLDER
3. CURVED SHOWER ROD
4. MEDICINE CABINET
5. MIRROR
6. HAND TOWEL RING
7. SOAP DISH
8. RECESSED CABINET ABOVE W.C.
9. 24" TOWEL BAR
10. GRAB BAR REINFORCEMENT, BTWN. 2'-6" MAX. A.F.F. & 3'-2" MIN. A.F.F.-(GRAB BARS TO BE INSTALLED IN ALL ANSI TYPE 'A' UNITS)
11. SHOWER HEAD
12. WATER CLOSET STD. HT.
13. LIGHT FIXTURE (SEE ELECTRICAL)
14. SINK
15. MICROWAVE
16. RANGE
17. DISHWASHER
18. REFRIGERATOR
19. OVEN
20. ANSI OVEN
21. VANITY CABINET W/SINK
22. 36" - TUB
23. EXHAUST FAN
24. 32" - TUB
25. 6X6 TILE
26. HAND HELD/FIXED SHOWER SPRAY UNIT W/HOSE 60" MIN. LONG AND ADJUSTABLE BAR
27. REMOVABLE IN TUB SEAT
28. FIBERGLASS TUB W/ TILE SURROUND
29. GLASS SHOWER ENCLOSURE W/ TILE WALLS & ACRYLIC PRE-FABRICATED PAN.

UNIT 3C - Total Gross Area Schedule

Name	Area	Bedrooms	Baths	Den	Occupants
UNIT 3C	1540 SF	3	3		
BALCONY	103 SF				
	1643 SF				

UNIT 3C - Total Net Area

Unit Descriptor	Area	Bedrooms	Baths	Den
UNIT 3C	1,462 SF	3	3	
	1,462 SF			

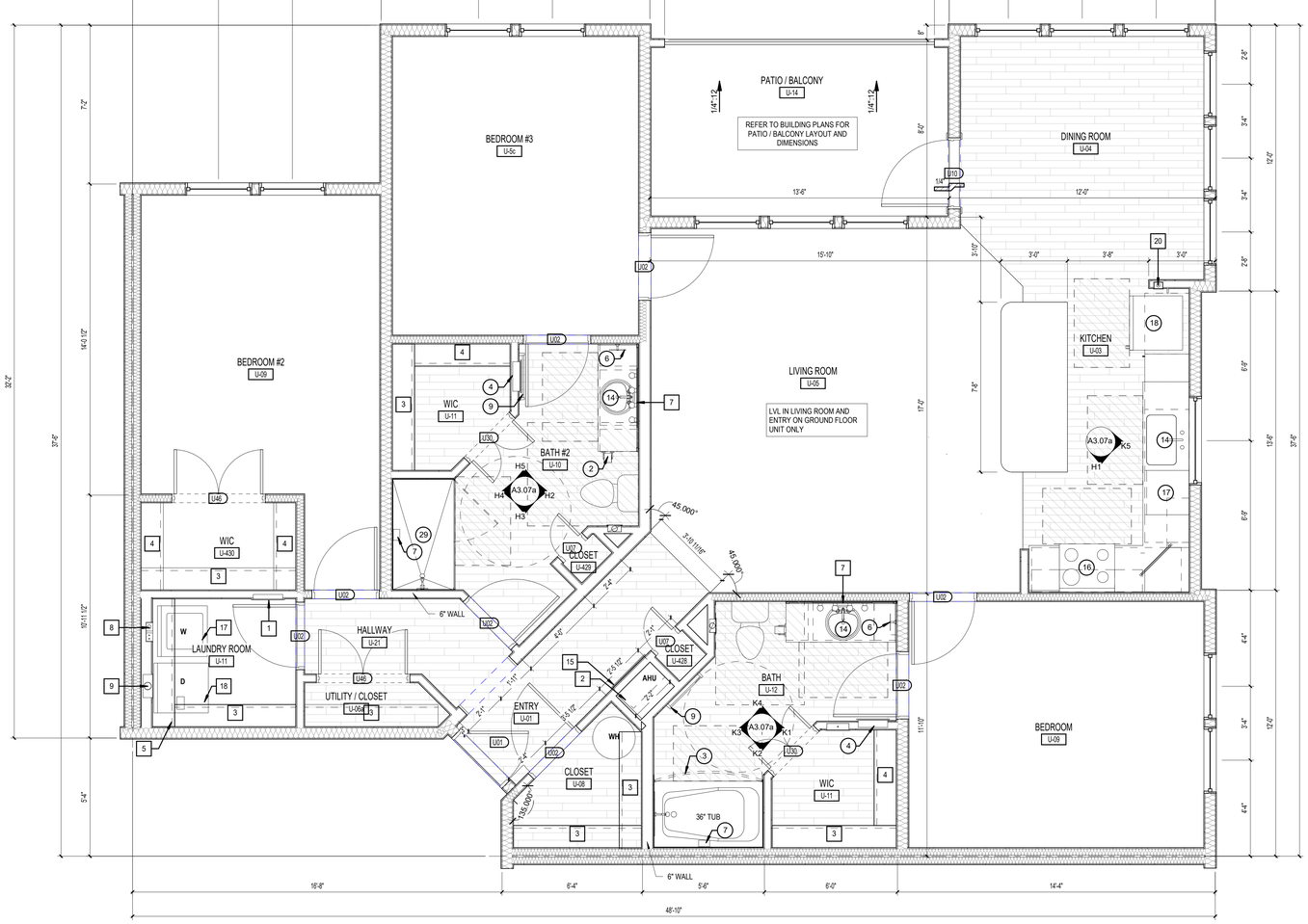

K1 UNIT 3C - DIMENSIONS & REFERENCE PLAN
3/8" = 1'-0"

GENERAL NOTES:

1. ALL DIMENSIONS ARE FROM OUTSIDE FACE OF STUD UNLESS NOTED OTHERWISE.
2. REFER TO EXTERIOR ELEVATIONS AND BUILDING PLANS FOR WINDOW TYPE.
3. CONTRACTOR TO FIELD VERIFY ALL DIMENSIONS. NOTIFY ARCHITECT OF ANY DISCREPANCIES.
4. REFER TO A3.30 - A3.52 FOR BALCONY PLANS SPECIFIC TO EACH UNIT AS IT OCCURS THROUGHOUT.
5. ALL PLUMBING WALLS NEED TO BE COORDINATED WITH PLUMBER TO DETERMINE 2X4 OR 2X6 CONSTRUCTION.
6. PROVIDE ONE 4-A: 10-B-C 5 lb FIRE EXTINGUISHER PER UNIT. LOCATE PER FIRE DEPARTMENT REQUIREMENTS.
7. PROVIDE ACOUSTICAL UNDERLAYMENT UNDERNEATH VINYL PLANK FLOORING LOCATIONS WITHIN UNITS ON ELEVATED FLOORS. REFER TO SPECIFICATIONS FOR APPROVED PRODUCT.
8. PROVIDE DISPOSER AT ALL KITCHEN SINKS, REFER TO PLANS FOR AIR SWITCH LOCATION, PLACE ON SAME SIDE AS DISPOSER.
9. CLOSET RODS:
   - A. 12" DEEP, TOP OF SHELVING IN CLOSETS SHALL BE AT 3'-0" AND 6'-0", SEE PLANS
   - B. 12" DEEP SHELVING AT PANTRIES & LINEN CLOSETS: 5 SHELVES EQUALLY SPACED @ 13" A PART (16", 29", 42", 55" AND 68").
   - C. PROVIDE (5) 18" X 12" DEEP LINEN SHELVES EQUALLY SPACED AT BEDROOM/CLOSET ENDS WHERE INDICATED.
   - D. SHELVING AT LAUNDRY ROOMS - 24" DEEP @ 5'-7". SHELVING AT ENTRY CLOSETS - 12" DEEP @ 6'-0"
10. KITCHEN OUTLETS SHALL BE SPACED PER NEC. FHA REQUIRES THAT OUTLETS BE PLACED NO LESS THAN 3'-0" FROM THE CORNER UNLESS AN ADDITIONAL OUTLET IS ADDED. KITCHEN ELEVATIONS INDICATE APPROXIMATE DIMENSIONS NEEDED TO MEET BOTH NEC AND FHA. 4'-0" O.C. MAX. BETWEEN OUTLETS SHALL BE PROVIDED AROUND A CORNER.
11. SEE SHEET A3.10 FOR STANDARD MOUNTING HEIGHTS AND DETAILS.
12. PROVIDE WINDOW-EASE OPENING DEVICE AT ACCESSIBLE UNIT OPERABLE WINDOWS (WWW.WINDOWEASE.COM).

UNIT KEYNOTES: (X)

1. ELECTRICAL PANEL. REFER TO ELECTRICAL DWGS.
2. HVAC UNIT, SEE MECHANICAL DRAWINGS.
3. WIRE SHELF & POLE @6'-0"
4. WIRE SHELF @3'-4" & 6'-0" AFF.
5. SHELF ABOVE WASHER @ 5'-6" AFF.
6. MAINTAIN MIN. 3'-0" CLEAR BETWEEN FINISHES AND FURNITURE, TYP.
7. CENTER LIGHTING FIXTURE ABOVE LAVATORY.
8. WASHER BOX.
9. DRYER VENT.
10. COMBO WASHER / DRYER BOX
11. MOVABLE KITCHEN ISLAND
12. PROVIDE FAN RATED REINFORCED J-BOX
13. ATTIC ACCESS, TOP FLOOR UNITS ONLY.
14. WATER HEATER, SEE PLUMBING DRAWINGS.
15. ACCESS PANEL FOR MECH. UNIT.
16. FRAMELESS MIRROR.
17. WASHER.
18. DRYER.
19. STACKED WASHER/DRYER COMBO.
20. ICE MAKER CONNECTION.

ISSUE HISTORY

No.	Date	Description

REVISION HISTORY

No.	Date	Description

FUGLEBERG KOCH
2555 Temple Trail, Winter Park, FL 32789 (407) 629-0595
www.fuglebergkoch.com AA26002103

CONSULTANT

STATE OF ALABAMA
MICHAEL E. GOOD
8234
4/15/22
REGISTERED ARCHITECT

THE ROBERT - MADISON MADISON, ALABAMA	Drawn: MB Checked: JK Approval: MG Date: 04/15/2022 Project #: 5722

UNIT 3C - 3BR UNIT PLAN

A3.07

© 2018 These documents and their contents are the property of FUGLEBERG KOCH - AA26002103. and are to be used only for the specific project noted on these drawings. Any reproductions, alterations, or modifications of these documents without the expressed written consent of Fugleberg Koch is prohibited by law.

PLOTTED: 5/3/2022
3:08:13 PM

BATH & KITCHEN LEGEND: (X)

1. 18" TOWEL BAR
2. TOILET TISSUE HOLDER
3. CURVED SHOWER ROD
4. MEDICINE CABINET
5. MIRROR
6. HAND TOWEL RING
7. SOAP DISH
8. RECESSED CABINET ABOVE W.C.
9. 24" TOWEL BAR
10. GRAB BAR REINFORCEMENT, BTWN. 2'-6" MAX. A.F.F. & 3'-2" MIN. A.F.F.-(GRAB BARS TO BE INSTALLED IN ALL ANSI TYPE 'A' UNITS)
11. SHOWER HEAD
12. WATER CLOSET STD. HT.
13. LIGHT FIXTURE (SEE ELECTRICAL)
14. SINK
15. MICROWAVE
16. RANGE
17. DISHWASHER
18. REFRIGERATOR
19. OVEN
20. ANSI OVEN
21. VANITY CABINET W/SINK
22. 36" - TUB
23. EXHAUST FAN
24. 32" - TUB
25. 6X6 TILE
26. HAND HELD/FIXED SHOWER SPRAY UNIT W/HOSE 60" MIN. LONG AND ADJUSTABLE BAR
27. REMOVABLE IN TUB SEAT
28. FIBERGLASS TUB W/ TILE SURROUND
29. GLASS SHOWER ENCLOSURE W/ TILE WALLS & ACRYLIC PRE-FABRICATED PAN.

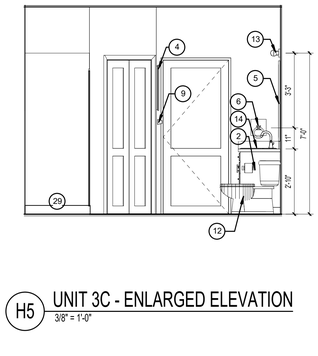

H5 UNIT 3C - ENLARGED ELEVATION
3/8" = 1'-0"

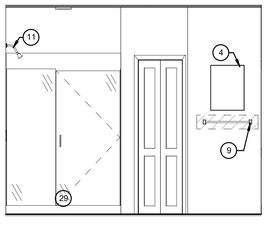

H4 UNIT 3C - ENLARGED ELEVATION
3/8" = 1'-0"

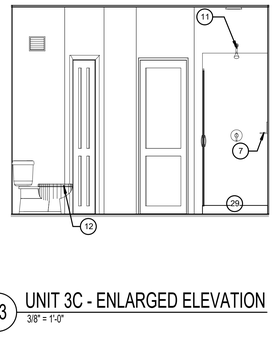

H3 UNIT 3C - ENLARGED ELEVATION
3/8" = 1'-0"

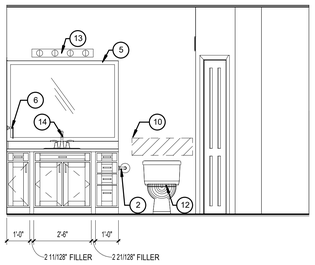

H2 UNIT 3C - ENLARGED ELEVATION
3/8" = 1'-0"

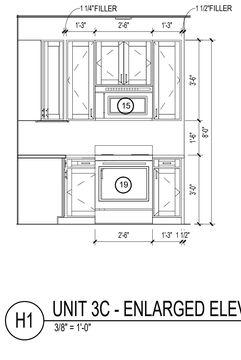

H1 UNIT 3C - ENLARGED ELEVATION
3/8" = 1'-0"

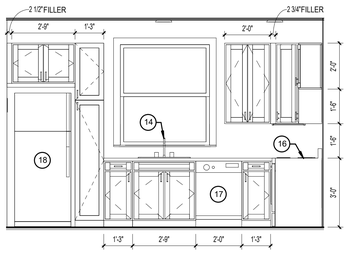

K5 UNIT 3C - ENLARGED ELEVATION
3/8" = 1'-0"

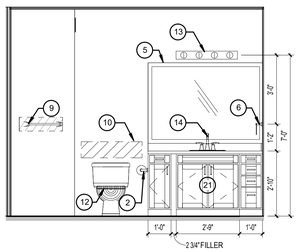

K4 UNIT 3C - ENLARGED ELEVATION
3/8" = 1'-0"

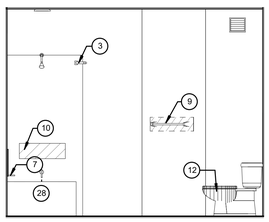

K3 UNIT 3C - ENLARGED ELEVATION
3/8" = 1'-0"

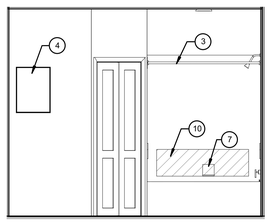

K2 UNIT 3C - ENLARGED ELEVATION
3/8" = 1'-0"

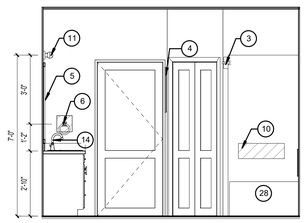

K1 UNIT 3C - ENLARGED ELEVATION
3/8" = 1'-0"

ISSUE HISTORY

No.	Date	Description

REVISION HISTORY

No.	Date	Description

© 2018 These documents and their contents are the property of FUGLEBERG KOCH - AA26002103. and are issued only for the specific project noted on these drawings. Any reproductions, extensions, or modifications of these documents without the expressed written consent of Fugleberg Koch is prohibited by law.

FUGLEBERG KOCH
2555 Temple Trail, Winter Park, FL 32789 (407) 629-0595
www. fuglebergkoch.com AA26002103

CONSULTANT

STATE OF ALABAMA
MICHAEL E. GOOD
8234
4/15/22
REGISTERED ARCHITECT

THE ROBERT - MADISON	Drawn: MB
MADISON, ALABAMA	Checked: JK
	Approval: MG
	Date: 04/15/2022
	Project #: 5722

UNIT 3C - 3BR UNIT PLAN

A3.07a

PLOTTED: 5/3/2022
3:08:16 PM

GENERAL NOTES:

1. ALL DIMENSIONS ARE FROM OUTSIDE FACE OF STUD UNLESS NOTED OTHERWISE.
2. REFER TO EXTERIOR ELEVATIONS AND BUILDING PLANS FOR WINDOW TYPE.
3. CONTRACTOR TO FIELD VERIFY ALL DIMENSIONS. NOTIFY ARCHITECT OF ANY DISCREPANCIES.
4. REFER TO A3.30 - A3.32 FOR BALCONY PLANS SPECIFIC TO EACH UNIT AS IT OCCURS THROUGHOUT.
5. ALL PLUMBING WALLS NEED TO BE COORDINATED WITH PLUMBER TO DETERMINE 2X4 OR 2X6 CONSTRUCTION.
6. PROVIDE ONE 4-A, 10-B:C 5 lb FIRE EXTINGUISHER PER UNIT. LOCATE PER FIRE DEPARTMENT REQUIREMENTS.
7. PROVIDE ACOUSTICAL UNDERLAYMENT UNDERNEATH VINYL PLANK FLOORING LOCATIONS WITHIN UNITS ON ELEVATED FLOORS. REFER TO SPECIFICATIONS FOR APPROVED PRODUCT.
8. PROVIDE DISPOSER AT ALL KITCHEN SINKS. REFER TO PLANS FOR AIR SWITCH LOCATION, PLACE ON SAME SIDE AS DISPOSER.
9. CLOSET RODS:
   A. 12" DEEP, TOP OF SHELVING IN CLOSETS SHALL BE AT 3'-0" AND 6'-0", SEE PLANS
   B. 12" DEEP SHELVING AT PANTRIES & LINEN CLOSETS: 5 SHELVES EQUALLY SPACED @ 13" A PART (16", 29", 42", 55" AND 68").
   C. PROVIDE (5) 18" X 12" DEEP LINEN SHELVES EQUALLY SPACED AT BEDROOM/CLOSET ENDS WHERE INDICATED.
   D. SHELVING AT LAUNDRY ROOMS - 24" DEEP @ 5'-7". SHELVING AT ENTRY CLOSETS - 12" DEEP @ 6'-0".
10. KITCHEN OUTLETS SHALL BE SPACED PER NEC. FHA REQUIRES THAT OUTLETS BE PLACED NO LESS THAN 3'-0" FROM THE CORNER UNLESS AN ADDITIONAL OUTLET IS ADDED. KITCHEN ELEVATIONS INDICATE APPROXIMATE DIMENSIONS NEEDED TO MEET BOTH NEC AND FHA. 4'-0" O.C. MAX. BETWEEN OUTLETS SHALL BE PROVIDED AROUND A CORNER.
11. SEE SHEET A3.10 FOR STANDARD MOUNTING HEIGHTS AND DETAILS.
12. PROVIDE WINDOW-EASE OPENING DEVICE AT ACCESSIBLE UNIT OPERABLE WINDOWS (WWW.WINDOWEASE.COM).

RCP LEGEND - UNITS

	SMOKE DETECTOR
	LED FLUSH MOUNT - INTERIOR / EXTERIOR
	LED WALL MOUNT - INTERIOR
	PENDANT - CEILING MOUNTED
	LIGHT - WALL MOUNTED
	CEILING FAN - WITH LIGHT KIT
	MULTI FIXTURE VANITY LIGHT - WALL MOUNTED
	LED UNDER CABINET DOWNLIGHT
	SQUARE SUPPLY DIFFUSER - CEILING MOUNTED
	SQUARE RETURN DIFFUSER - CEILING MOUNTED
	SUPPLY DIFFUSER - WALL MOUNTED
	RETURN DIFFUSER - WALL MOUNTED
	ADA HORN/STROBE DEVICE - WALL MT.
	GYPSUM BOARD CEILING @ 9'-0"

NOTES:
1. RCP DIMS SHOWN ARE FROM FACE OF FINISH.
2. ALIGN UNDER CABINET LIGHTS WITH THE CENTER OF THE CABINET ABOVE.

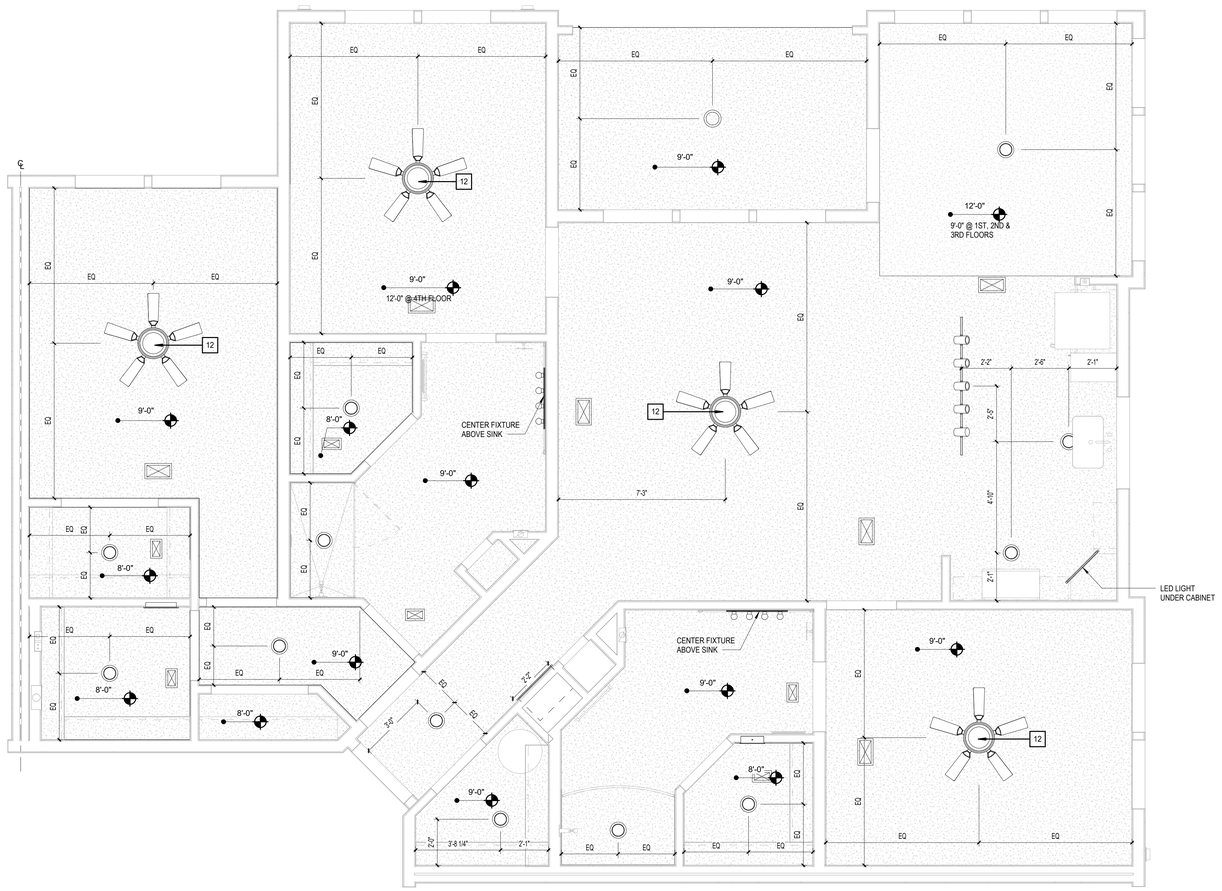

E1 UNIT 3C - RCP
3/8" = 1'-0"

LEGEND:

	CLEAR FLOOR SPACE
	LEVEL CHANGE
X	DENOTES BATHROOM ACCESSORY/KITCHEN APPLIANCE
	BATT INSULATION
ELEVATION / PLAN	DENOTES BLOCKING FOR FUTURE GRAB BARS. REFER TO FHA CLEARANCES FOR MORE INFO.

ISSUE HISTORY

No.	Date	Description

REVISION HISTORY

No.	Date	Description

FUGLEBERG KOCH
2555 Temple Trail, Winter Park, FL 32789 (407) 629-0595
www.fuglebergkoch.com AA26002103

CONSULTANT

STATE OF ALABAMA
MICHAEL E. KOCH
8234
4/15/22
REGISTERED ARCHITECT

THE ROBERT - MADISON	Drawn: MB
MADISON, ALABAMA	Checked: JK
	Approval: MG
	Date: 04/15/2022
	Project #: 5722

UNIT 3C - RCP

A3.08

PLOTTED: 5/3/2022 3:09:19 PM

© 2015 These documents and their contents are the property of FUGLEBERG KOCH - AA26002103, and are loaned only for the specific project noted on these drawings. Any reproductions, extensions, or modifications of these documents without the expressed written consent of Fugleberg Koch is prohibited by law.

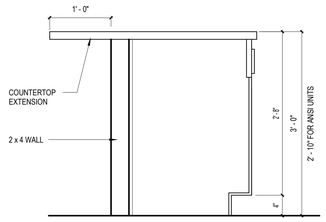

B1 COUNTERTOP DETAIL AT KITCHEN
1" = 1'-0"

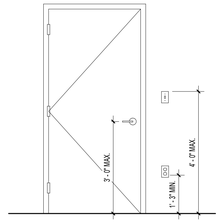

B3 TYP. FHA MOUNTING HT. REQ
1/2" = 1'-0"

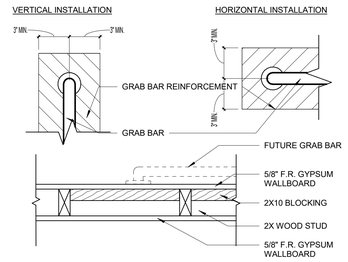

B5 BLOCKING FOR FUTURE GRAB BARS
1 1/2" = 1'-0"

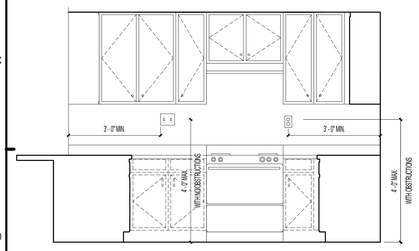

D1 TYP. FHA KITCHEN MOUNTING HT. REQ.
1/2" = 1'-0"

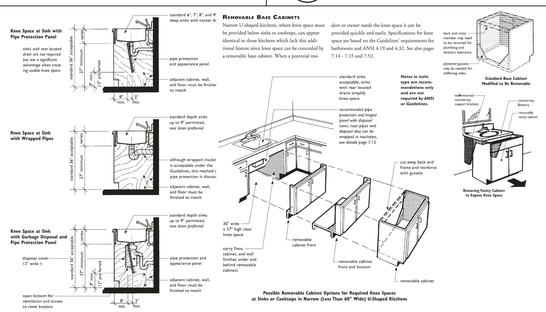

D3 REMOVABLE CABINET DETAIL Copy 1
3/8" = 1'-0"

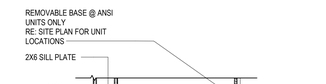

D11 REMOVABLE BASE CABINET DETAIL
1" = 1'-0"

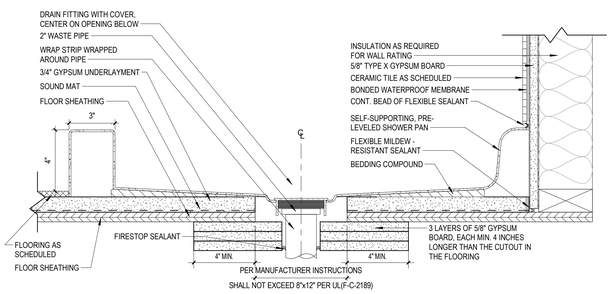

F1 SHOWER FRAMING DETAIL
3" = 1'-0"

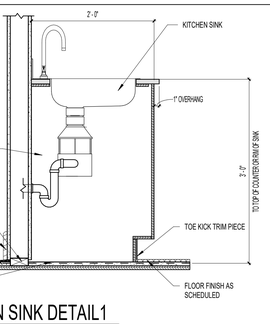

F8 KITCHEN SINK DETAIL1
1" = 1'-0"

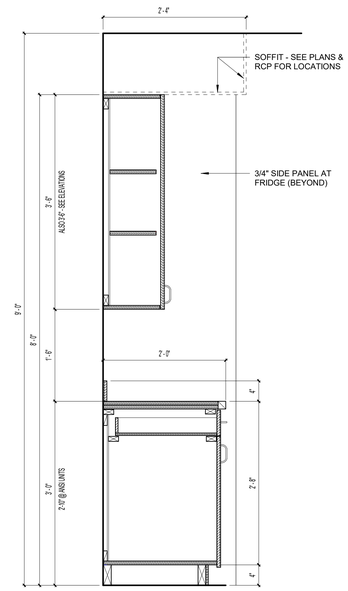

H11 KITCHEN CABINET SECTION
1" = 1'-0"

NOTE:
ALL WOOD TO BE 3/4" CABINET GRADE PLYWOOD. SPECIES AND STAIN TO MATCH OTHER CABINETS. COVER EXPOSED EDGES WITH SOLID WOOD OR WOOD LIKE EDGE BAND. SECURE FASCIA WITH CONCEALED WOOD CLEATS WITH (6), EQUALLY SPACED #8X1/2" FLAT-HEAD, SQUARE DRIVE CABINET SCREWS.

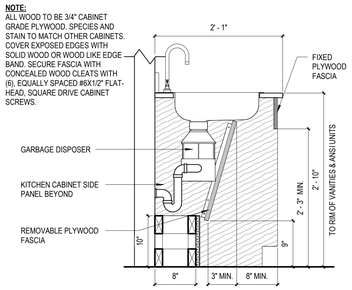

D8 REMOVABLE KITCHEN BASE CABINET DETAIL
1" = 1'-0"

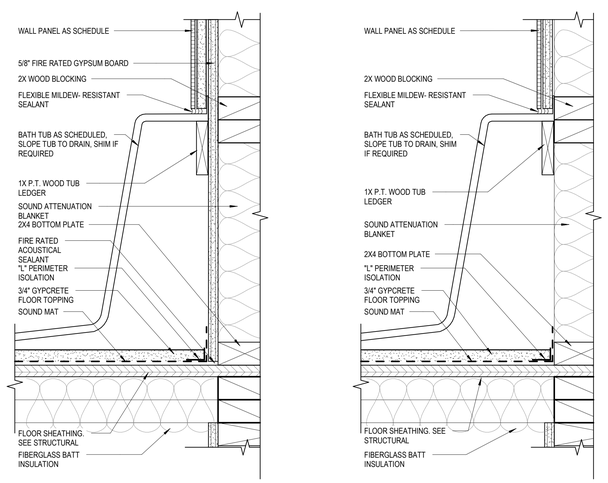

FIRE RATED CONDITION

NON-FIRE RATED CONDITION

K1 FIRE SECTIONS AT TUB
3" = 1'-0"

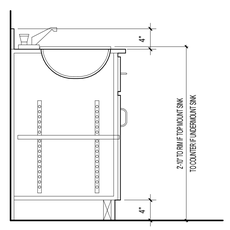

K5 BASE CABINET DETAIL AT BATH
1" = 1'-0"

NOTES:

1. HORIZONTAL BLOCKING DIMENSIONS ARE MINIMUM.
2. BLOCKING TO BE FRAMED
3. REFER TO MANUFACTURER'S INSTALLATION INSTRUCTIONS FOR ADDITIONAL BLOCKING REQUIREMENTS NOT SHOWN.

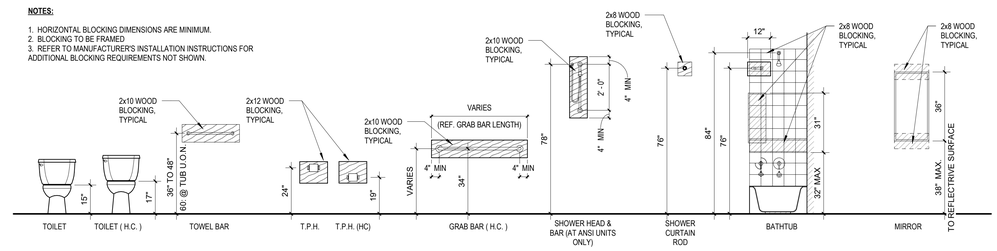

K7 BATH FIXTURE CLEAR HEIGHTS
3/8" = 1'-0"

ISSUE HISTORY

No.	Date	Description
1	04/15/2022	PERMIT SUBMITTAL

REVISION HISTORY

No.	Date	Description

© 2016 These documents and their contents are the property of FUGLEBERG KOCH - AA26002103, and are issued only for the project noted on these drawings. Any reproductions, extensions, or modifications of these documents without the expressed written consent of Fugleberg Koch is prohibited by law.

FUGLEBERG KOCH
2555 Temple Trail, Winter Park, FL 32789 (407) 629-0595
www.fuglebergkoch.com AA26002103

CONSULTANT

STATE OF ALABAMA
MICHAEL E. GOVE
8234
4/15/22
REGISTERED ARCHITECT

MICHAEL GOVE
8234

THE ROBERT MADISON MADISON, ALABAMA	Drawn: MB Checked: JK Approval: MG Date: 04/15/2022 Project #: 5722
KITCHEN, BATH AND LAUNDRY REQUIREMENTS	
A3.22	

PLOTTED: 5/3/2022 3:22:09 PM

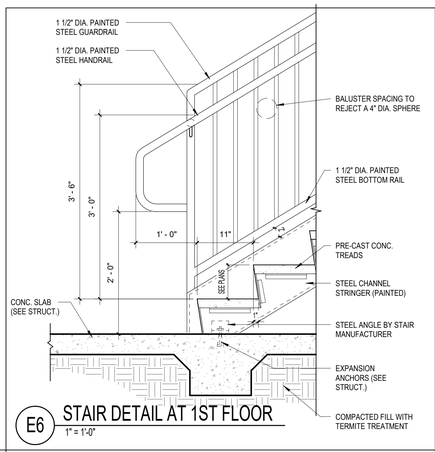

E6 STAIR DETAIL AT 1ST FLOOR
1" = 1'-0"

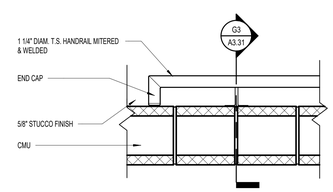

G1 PLAN DETAIL AT HANDRAIL
1 1/2" = 1'-0"

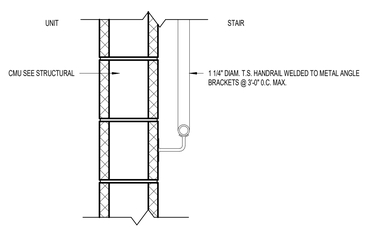

G3 SECTION AT HANDRAIL
1 1/2" = 1'-0"

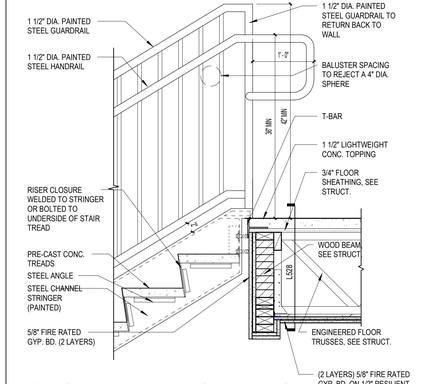

G6 STAIR DETAIL AT TOP LANDING
1" = 1'-0"

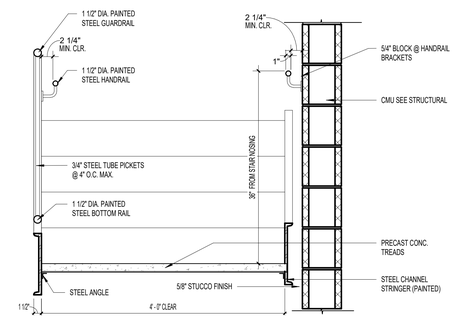

G9 STAIR CROSS SECTION
1" = 1'-0"

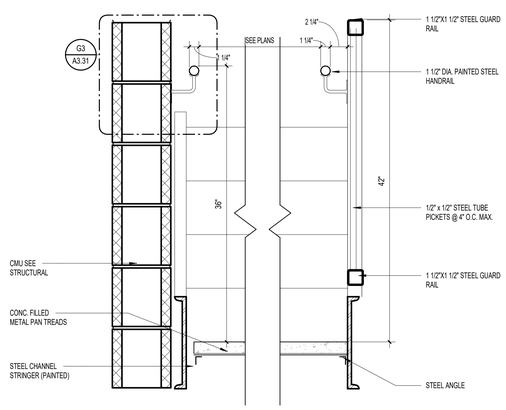

K3 STAIR SECTION @ BLDG A
1 1/2" = 1'-0"

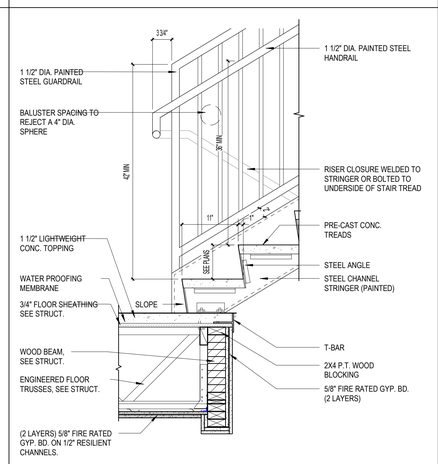

K6 STAIR DETAIL AT SECOND LANDING
1" = 1'-0"

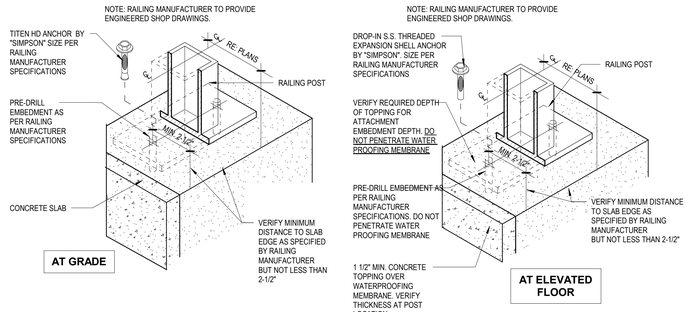

K9 RAILING DETAILS
3" = 1'-0"

ISSUE HISTORY

No.	Date	Description
1	04/15/2022	PERMIT SUBMITTAL

REVISION HISTORY

No.	Date	Description

FUGLEBERG KOCH
2555 Temple Trail, Winter Park, FL 32789 (407) 629-0595
www.fuglebergkoch.com AA26002103

CONSULTANT

STATE OF ALABAMA
MICHAEL V. GOVE
8234
4/15/22
REGISTERED ARCHITECT

MICHAEL GOVE
8234

Drawn:	MB
Checked:	JK
Approval:	MG
Date:	04/15/2022
Project #:	5722

THE ROBERT MADISON
MADISON, ALABAMA

STAIR SECTION DETAILS

A3.31

PLOTTED: 5/3/2022 3:22:40 PM

© 2018 These documents are and have continued to be the property of FUGLEBERG KOCH - AA26002103. and are to be used only for the project specified. Any reproductions, reissue, or modifications of these documents without the expressed written consent of Fugleberg Koch is prohibited by law.

GENERAL NOTES:

PROVIDED DATA IS FOR REFERENCE ONLY. COMPONENT MATERIALS, SIZES, FABRICATION, AND ATTACHMENTS ARE TO BE CONFIRMED BY REQUIRED ENGINEERED SUBMITTAL. SUBMIT ENGINEERED FABRICATION DRAWINGS FOR REVIEW.
SUBMITTED LADDER DESIGN AND INSTALLATION MUST MEET OR EXCEED DESIGN LOAD REQUIRED BY APPLICABLE CODES AND REGULATIONS.
ALL COMPONENTS ARE TO BE PRIMED AND PAINTED, REFER TO SPECIFICATIONS

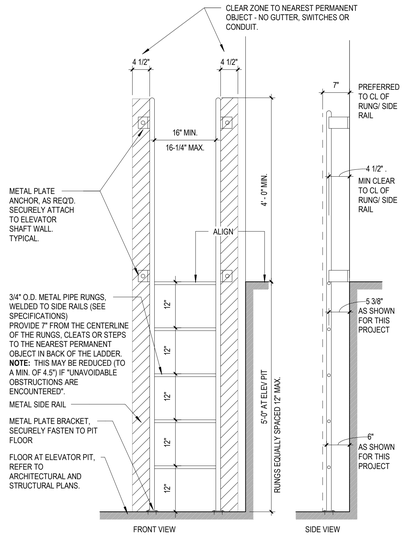

D5 PIT LADDER DETAIL
3/4" = 1'-0"

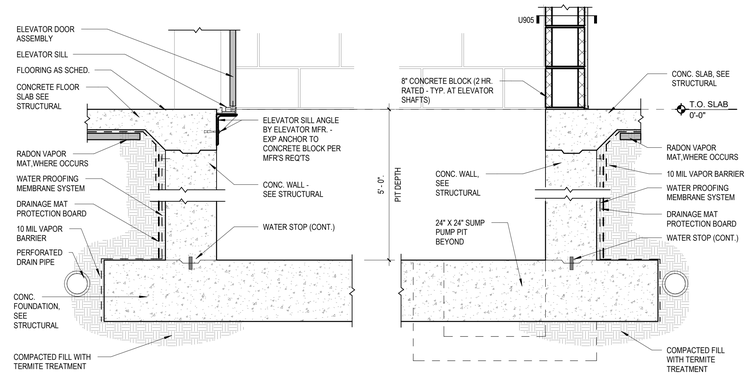

D7 SECTION THROUGH ELEVATOR PIT
1" = 1'-0"

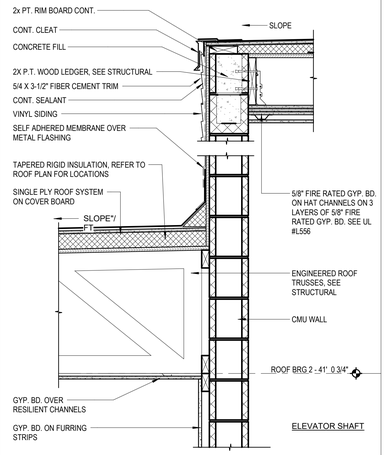

F7 ELEVATOR ROOF DETAIL - CMU
1" = 1'-0"

APPLY SIDING AND TRIM DIRECTLY TO CMU AS DIRECTED BY MANUFACTURER

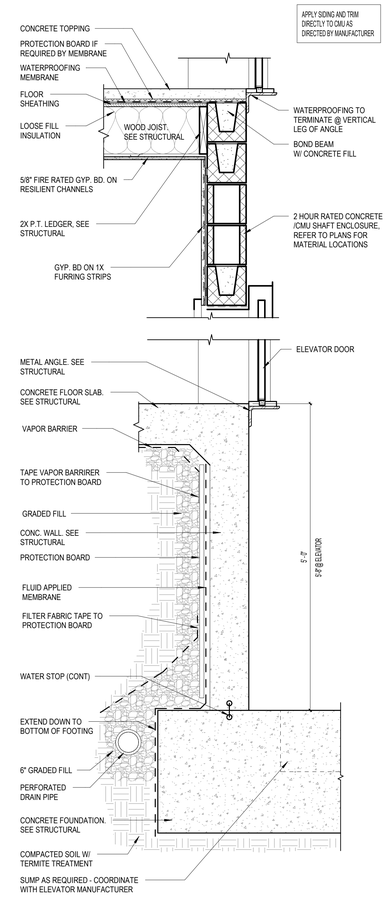

H10 ELEVATOR WALL DETAIL
1" = 1'-0"

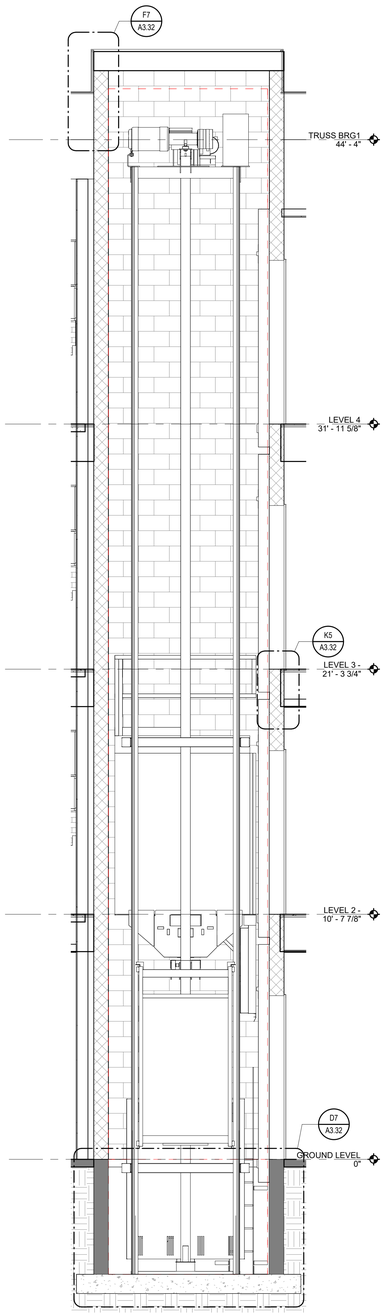

K1 TYPICAL ELEVATOR SECTION
3/8" = 1'-0"

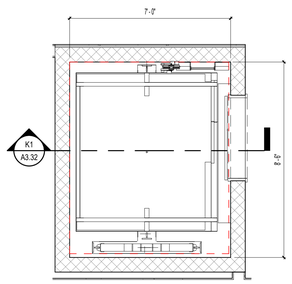

H5 TYPICAL ELEVATOR PLAN
3/8" = 1'-0"

APPLY PANEL AND TRIM DIRECTLY TO CMU AS DIRECTED BY MANUFACTURER

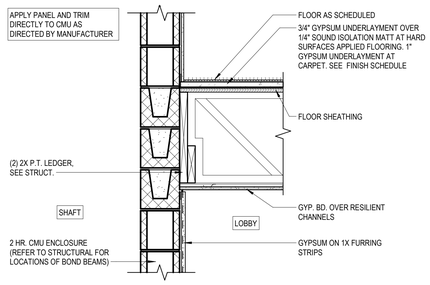

K5 ELEVATOR @ TYP. LVL.
1" = 1'-0"

APPLY PANEL AND TRIM DIRECTLY TO CMU AS DIRECTED BY MANUFACTURER

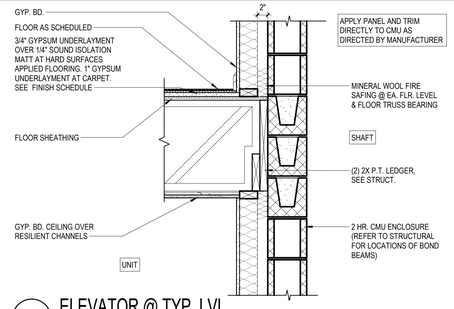

K7 ELEVATOR @ TYP. LVL.
1" = 1'-0"

ISSUE HISTORY

No.	Date	Description
1	04/15/2022	PERMIT SUBMITTAL

REVISION HISTORY

No.	Date	Description

FUGLEBERG KOCH
2555 Temple Trail, Winter Park, FL 32789 (407) 629-0595
www.fuglebergkoch.com AA26002103

CONSULTANT

STATE OF ALABAMA LICENSED MICHAEL E. GOVE 8234 4/15/22 REGISTERED ARCHITECT

MICHAEL GOVE
8234

Drawn:	MB
Checked:	JK
Approval:	MG
Date:	04/15/2022
Project #:	5722

THE ROBERT MADISON
MADISON, ALABAMA

ELEVATOR ENLARGED PLAN, SECTION AND DETAILS

A3.32

PLOTTED: 5/3/2022 3:22:54 PM

© 2018 These documents and their contents are the property of FUGLEBERG KOCH. AA26002103. Any reproductions, revisions, or modifications of these documents without the expressed written consent of Fugleberg Koch is prohibited by law. These drawings are specific to project noted on these drawings. Any other use is prohibited by law.

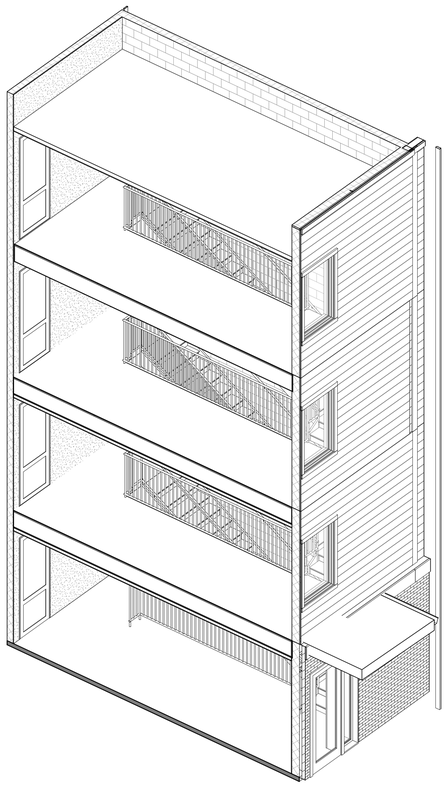

E4 3D STAIR 1 VIEW - BUILDING TYPE B

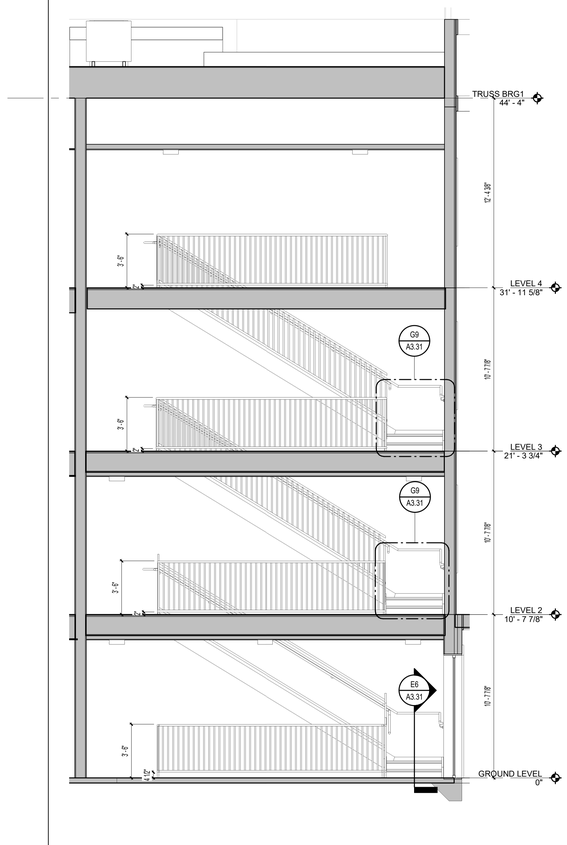

E7 BUILDING TYPE B - SECTION 2
1/4" = 1'-0"

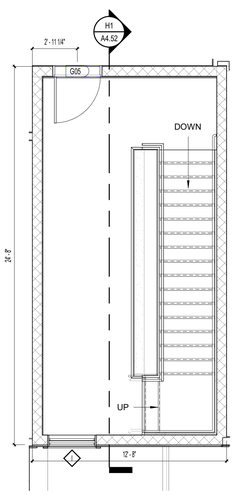

K1 STAIR 1 PLAN - BUILDING TYPE B - LEVEL 4
1/4" = 1'-0"

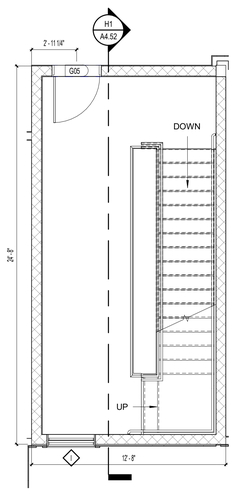

K4 STAIR 1 PLAN - BUILDING TYPE B - LEVEL 3
1/4" = 1'-0"

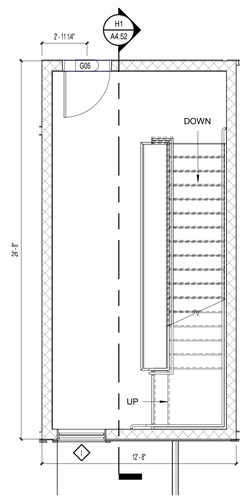

K7 STAIR 1 PLAN - BUILDING TYPE B - LEVEL 2
1/4" = 1'-0"

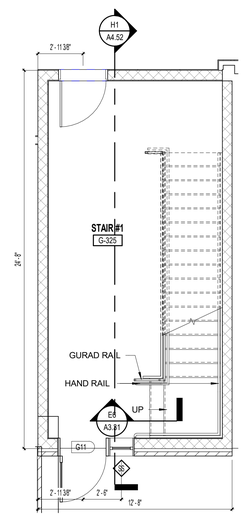

K11 STAIR 1 PLAN - BUILDING TYPE B - GROUND LEVEL
1/4" = 1'-0"

ISSUE HISTORY

No.	Date	Description
1	04/15/2022	PERMIT SUBMITTAL

REVISION HISTORY

No.	Date	Description

FUGLEBERG KOCH
2555 Temple Trail, Winter Park, FL 32789 (407) 629-0595
www. fuglebergkoch.com AA26002103

CONSULTANT

STATE OF ALABAMA
MICHAEL E. GOVE
8234
4/15/22
REGISTERED ARCHITECT

MICHAEL GOVE
8234

THE ROBERT MADISON MADISON, ALABAMA	Drawn: MB Checked: JK Approval: MG Date: 04/15/2022 Project #: 5722

BUILDING TYPE B - STAIR PLANS, SECTIONS AND AXONOMETRIC

A3.33

PLOTTED: 5/3/2022
3:23:41 PM

© 2018 These documents and their contents are the property of FUGLEBERG KOCH - AA26002103, and are issued only for the specific project noted on these drawings. Any reproductions, revisions, or modifications of these documents without the expressed written consent of Fugleberg Koch is prohibited by law.

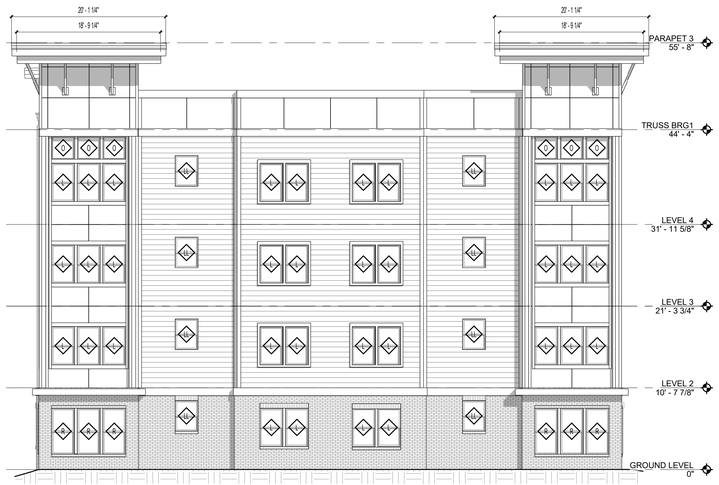

C3 BUILDING TYPE B - LEFT SIDE ELEVATION
1/8" = 1'-0"

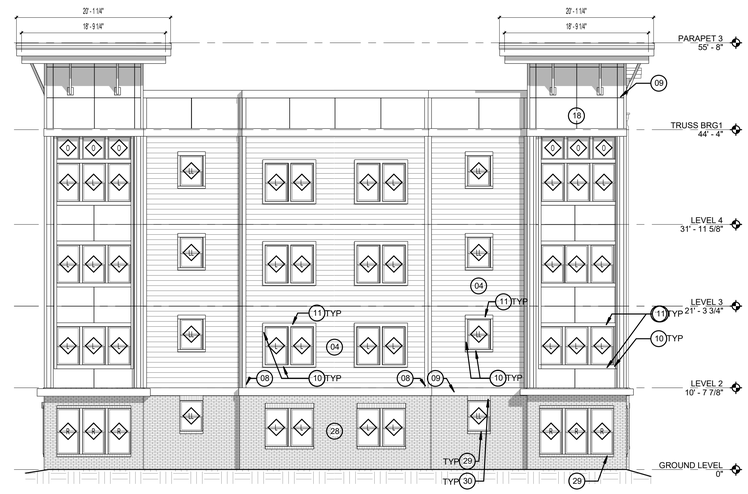

C8 BUILDING TYPE B - RIGTH SIDE ELEVATION
1/8" = 1'-0"

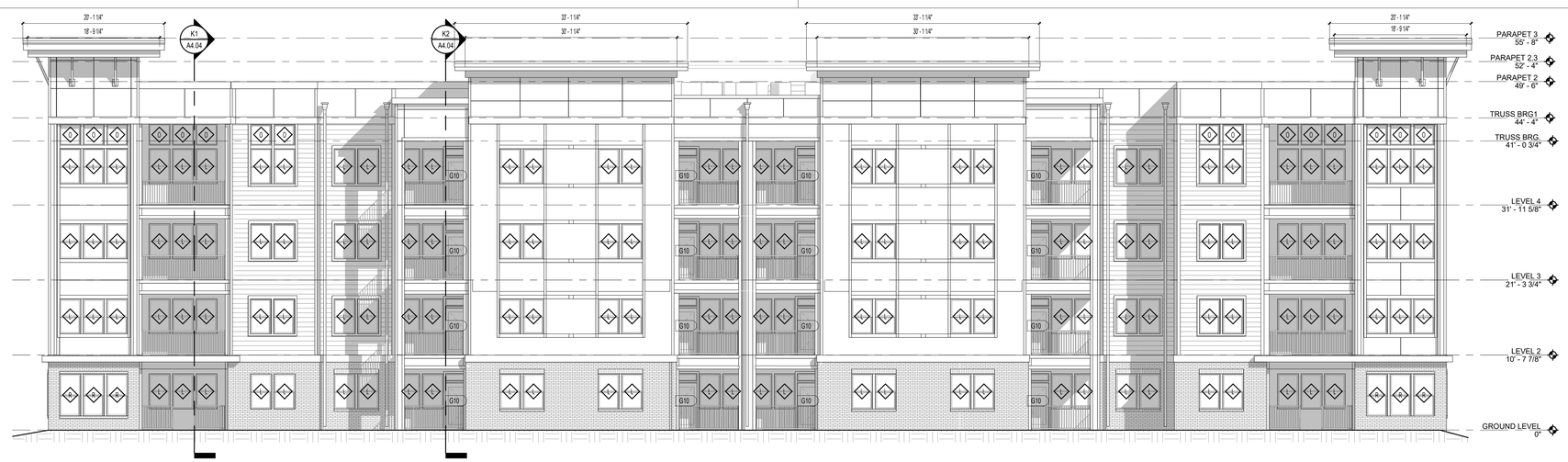

F2 BUILDING TYPE B - REAR ELEVATION
1/8" = 1'-0"

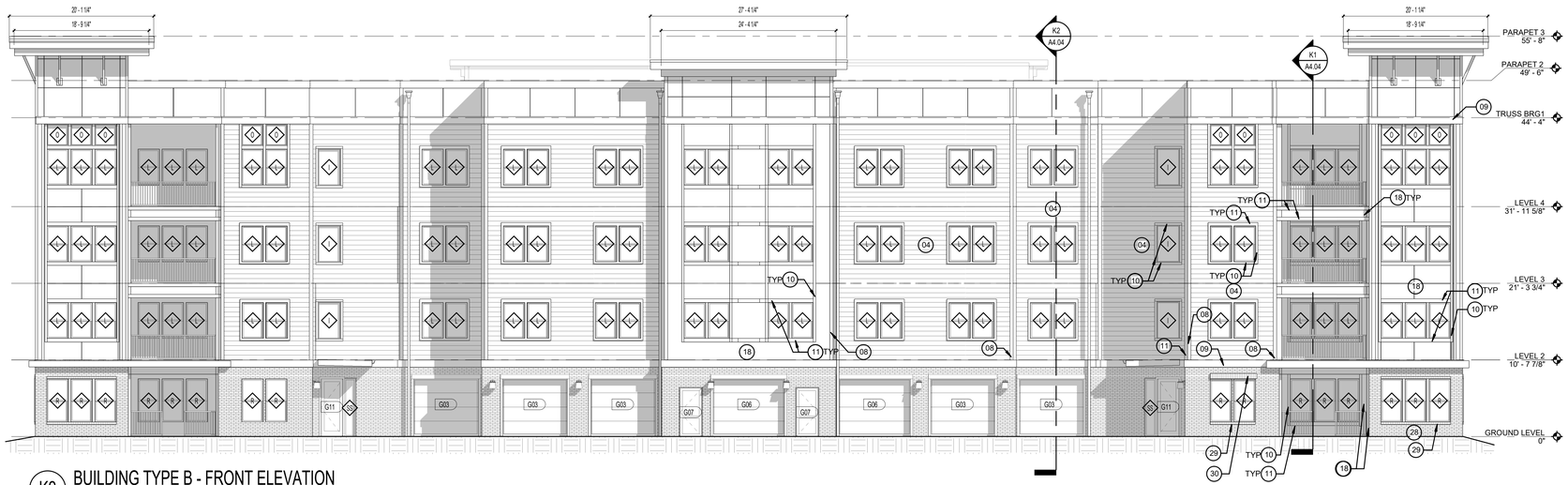

K2 BUILDING TYPE B - FRONT ELEVATION
1/8" = 1'-0"

LEGEND:

01. ASPHALT SHINGLES
02. DECORATIVE LOUVER - 3'-0" X 12'-0"
03. NOT USED
04. FIBER CEMENT SIDING 8" EXPOSURE
05. NOT USED
06 NOT USED
07. NOT USED
08. 5/4 x 5 -1/2" FIBER CEMENT CORNER TRIM
09. 5/4 x 11-1/4" FIBER CEMENT TRIM
10. 5/4 x 3-1/2" FIBER CEMENT TRIM
11. 5/4 x 5-1/2" FIBER CEMENT TRIM
12. CONDENSING UNIT - SEE MECHANICAL
13. VINYL TRIM - 5" DOUBLE CHANNEL LINEAL
14. 2x8 P.T. FASCIA ALUMINUM WRAPPED
15. NOT USED
16. 6" PREFINISHED METAL RAIN GUTTER
17. DOWNSPOUT
18. FIBER CEMENT PANEL
19. METER CENTER - SEE MECH. FOR LOCATION
20. LIGHTED BUILDING NUMBER SIGN
21. BUILDING/ APARTMENT NUMBER SIGN
22. NOT USED
23. EXHAUST VENTS
24. APARTMENT NUMBER SIGN
25. EXTERIOR WALL LIGHT. SEE ELECTRICAL
26. METAL RAILING SYSTEM
27. LOUVER - 4'-0" X 4'-0"
28. BRICK
29. BRICK SILL
30. BRICK SOLDIER COURSE
31. NOT USED
32. NOT USED

ISSUE HISTORY

No.	Date	Description
1	04/15/2022	PERMIT SUBMITTAL

REVISION HISTORY

No.	Date	Description

© 2018 These documents and their contents are the property of FUGLEBERG KOCH - AA26002103, and are issued only for the specific project noted on these drawings. Any reproductions, revisions, or modifications of these documents without the expressed written consent of Fugleberg Koch is prohibited by law.

FUGLEBERG KOCH
2555 Temple Trail, Winter Park, FL 32789 (407) 629-0595
www.fuglebergkoch.com AA26002103

CONSULTANT

STATE OF ALABAMA
MICHAEL E. GOVE
8234
4/15/22
REGISTERED ARCHITECT

MICHAEL GOVE
8234

THE ROBERT MADISON
MADISON, ALABAMA

Drawn:	MB
Checked:	JK
Approval:	MG
Date:	04/15/2022
Project #:	5722

BUILDING TYPE B - EXTERIOR ELEVATIONS

A4.02

PLOTTED: 5/3/2022 3:27:13 PM

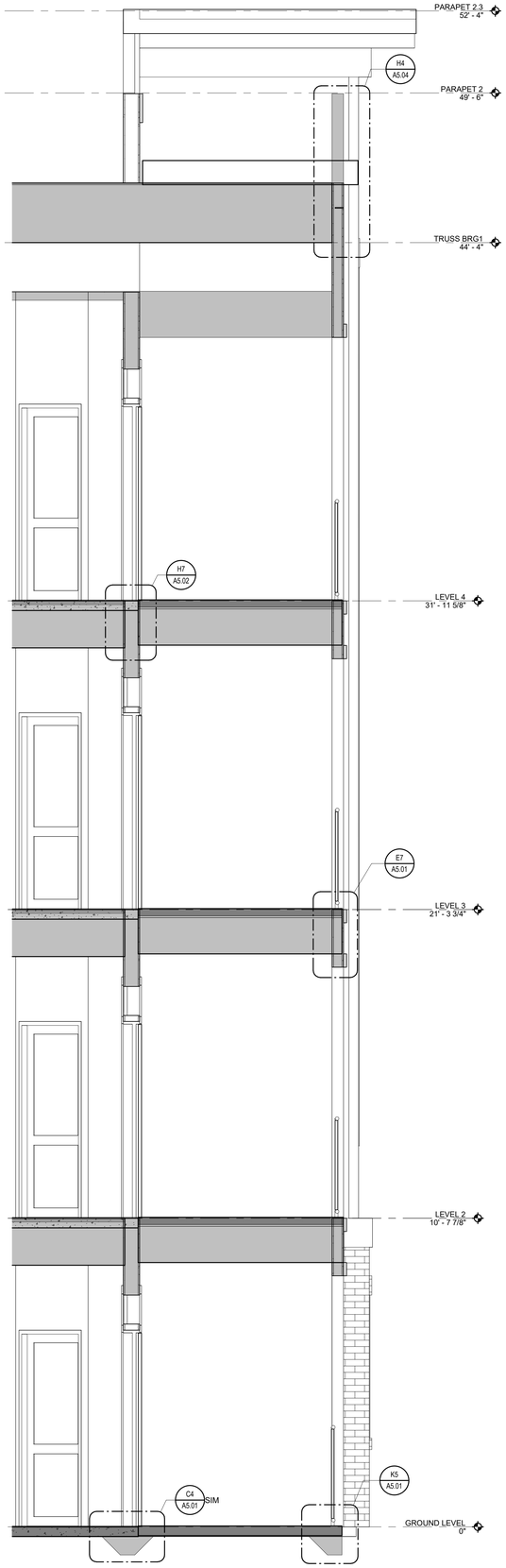

K2 BALCONY SECTION - UNIT 1B & 2B
1/2" = 1'-0"
E3/ A2.04

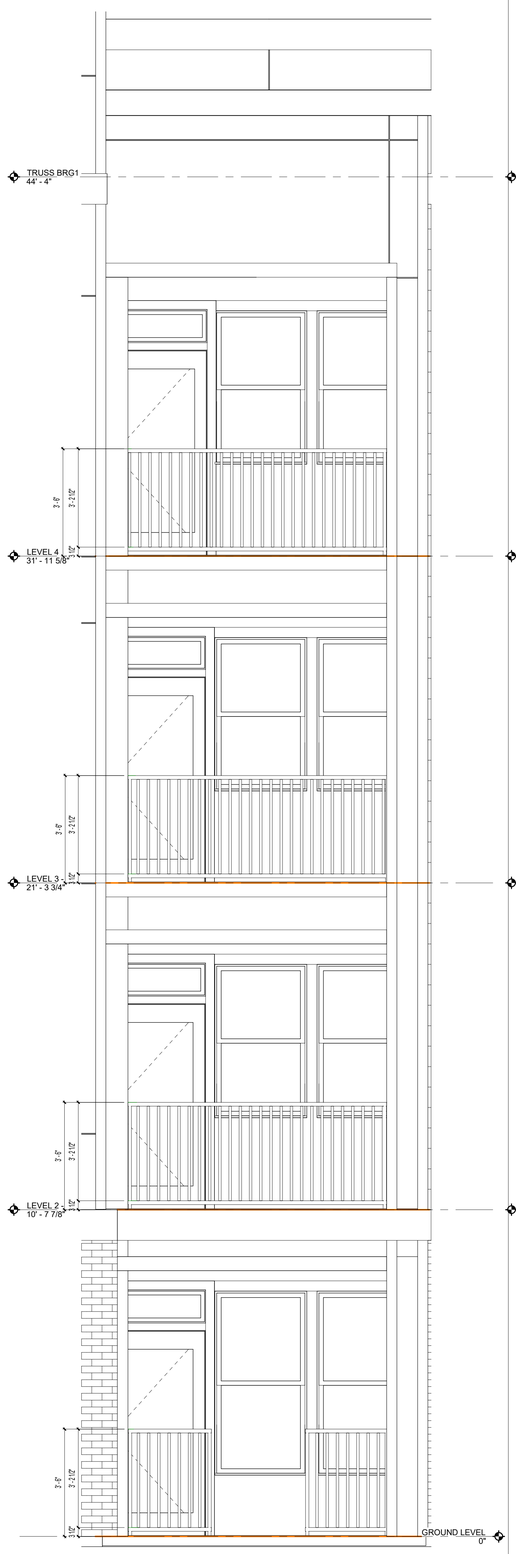

K4 BALCONY ELEVATION - UNITS 1B & 2B
1/2" = 1'-0"

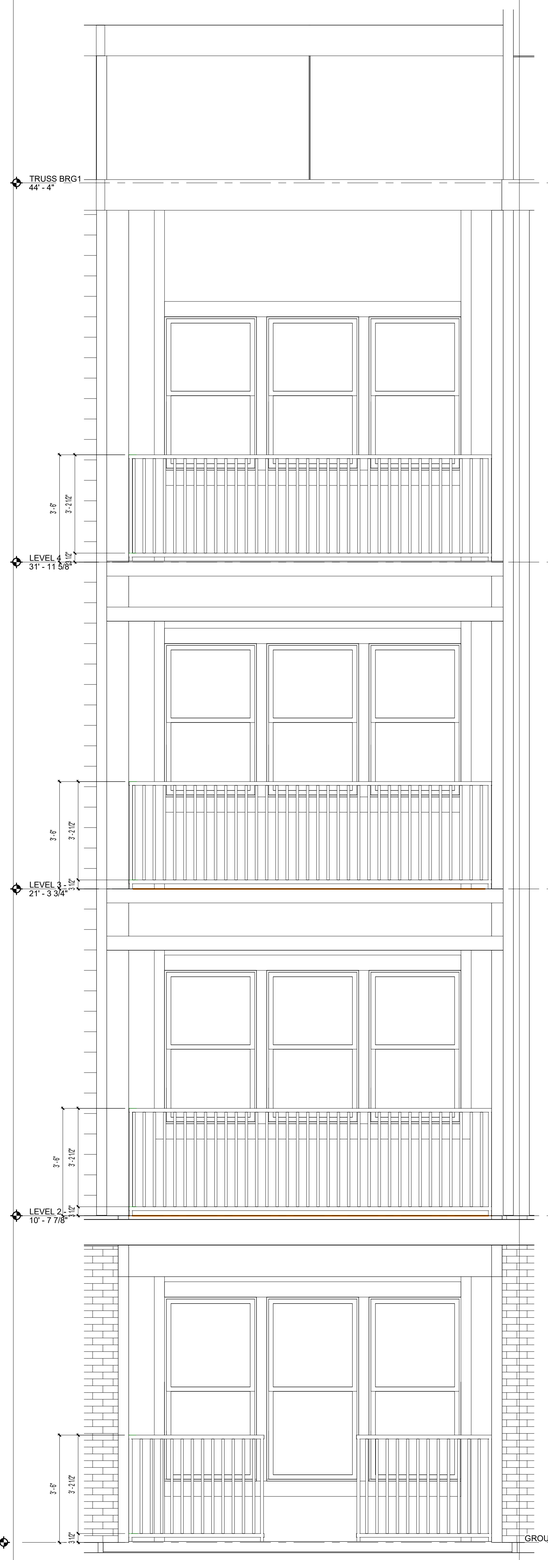

1 BALCONY ELEVATION - UNITS 2C & 3C
1/2" = 1'-0"

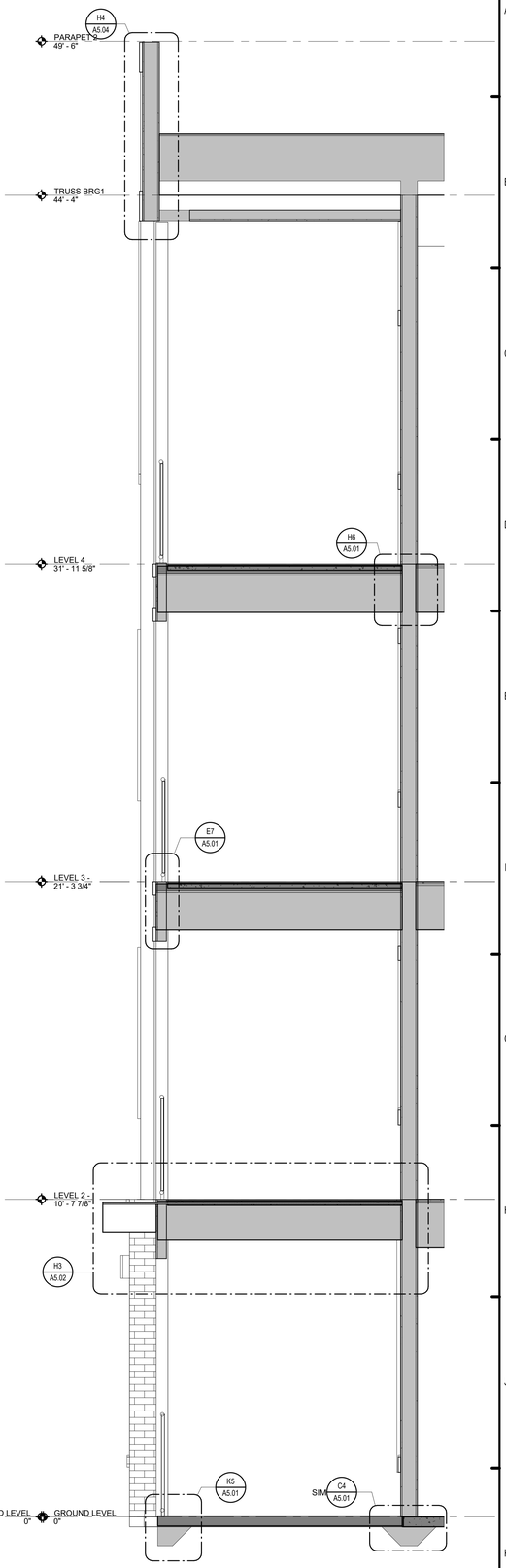

K1 BALCONY SECTION - UNIT 2C & 3C
1/2" = 1'-0"
E3/ A2.04

ISSUE HISTORY

No.	Date	Description
1	04/15/2022	PERMIT SUBMITTAL

REVISION HISTORY

No.	Date	Description

FUGLEBERG KOCH
2555 Temple Trail, Winter Park, FL 32789 (407) 629-9395
www. fuglebergkoch.com AA26002103

CONSULTANT

STATE OF ALABAMA
MICHAEL F. GOVE
8234
4/15/22
REGISTERED ARCHITECT

MICHAEL GOVE
8234

THE ROBERT MADISON
MADISON, ALABAMA

Drawn:	MB
Checked:	JK
Approval:	MG
Date:	04/15/2022
Project #:	5722

ENLARGED PATIO/BALCONY ELEVATIONS

A4.04

PLOTTED: 9/3/2022
3:28:16 PM

© 2018 These documents and their contents are the property of FUGLEBERG KOCH - AD26002103. Will be released only for specific project noted on these drawings. Any reproductions, extensions, or modifications of these documents without the expressed written consent of Fugleberg Koch is prohibited by law.

E1 BUILDING TYPE B - AXONOMETRIC 1

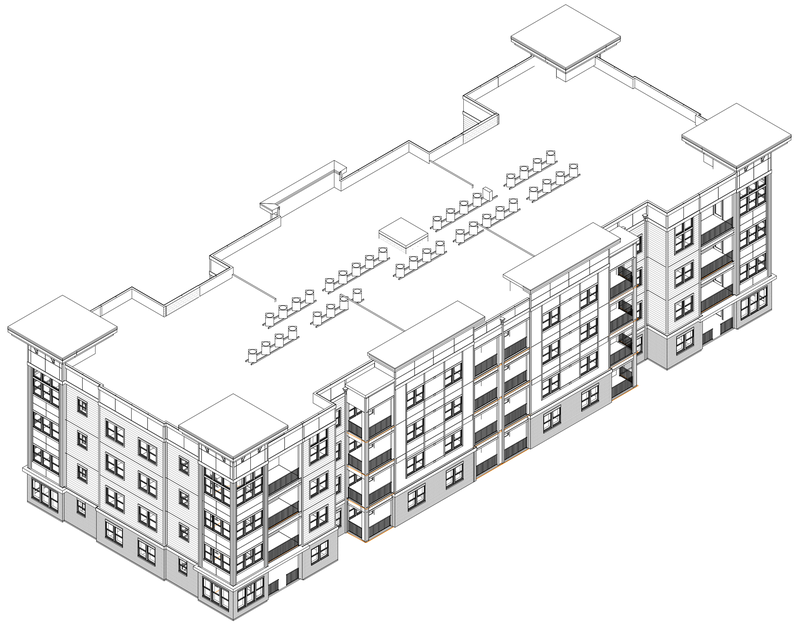

E8 BUILDING TYPE B - AXONOMETRIC 2

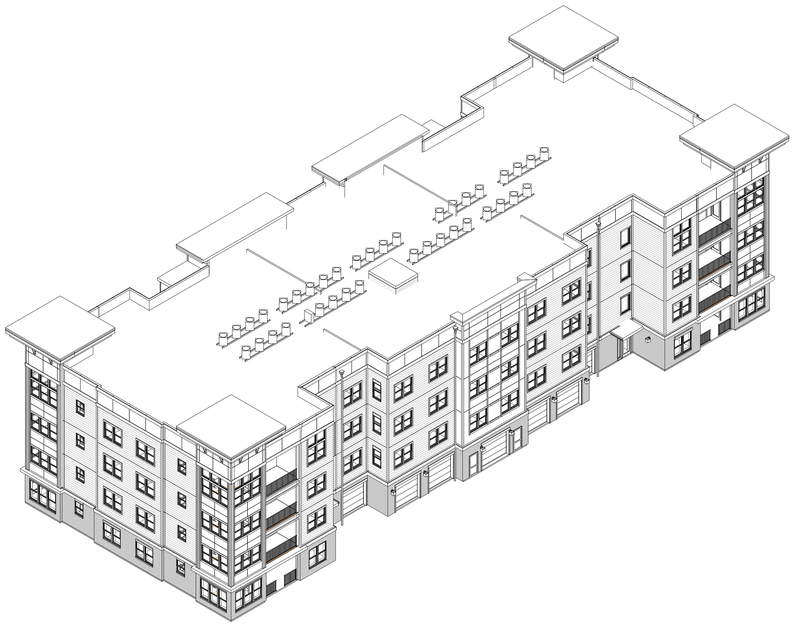

K1 BUILDING TYPE B - AXONOMETRIC 3

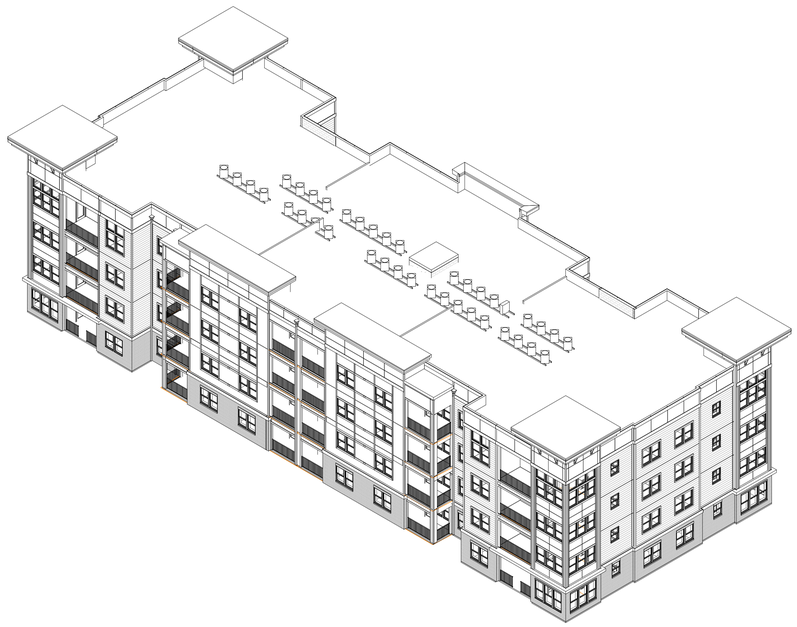

K8 BUILDING TYPE B - AXONOMETRIC 4

ISSUE HISTORY

No.	Date	Description
1	04/15/2022	PERMIT SUBMITTAL

REVISION HISTORY

No.	Date	Description

© 2018 These documents and their contents are the property of FUGLEBERG KOCH - AA26002103, and are issued only for the specific project listed on these drawings. Any reproductions, revisions, or modifications of these documents without the expressed written consent of Fugleberg Koch is prohibited by law.

FUGLEBERG KOCH
2555 Temple Trail, Winter Park, FL 32789 (407) 629-0595
www.fuglebergkoch.com AA26002103

CONSULTANT

STATE OF ALABAMA
MICHAEL E. GOVE
8234
4/15/22
REGISTERED ARCHITECT

MICHAEL GOVE
8234

THE ROBERT MADISON
MADISON, ALABAMA

Drawn:	MB
Checked:	JK
Approval:	MG
Date:	04/15/2022
Project #:	5722

BUILDING TYPE B - AXONOMETRICS

A4.11

PLOTTED: 5/3/2022 3:30:15 PM

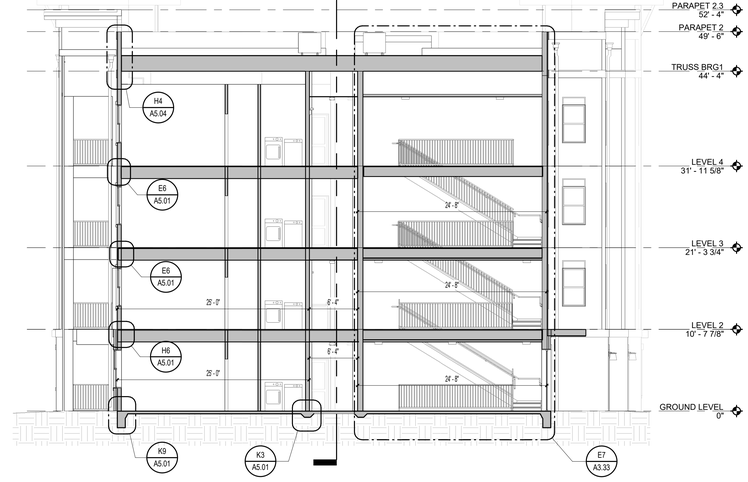

H1 BUILDING TYPE B - SECTION 7
1/8" = 1'-0"

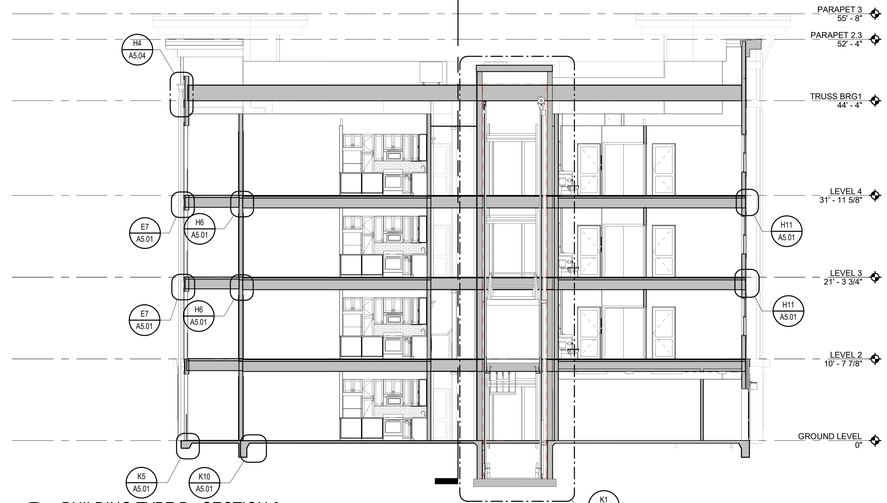

H2 BUILDING TYPE B - SECTION 8
1/8" = 1'-0"

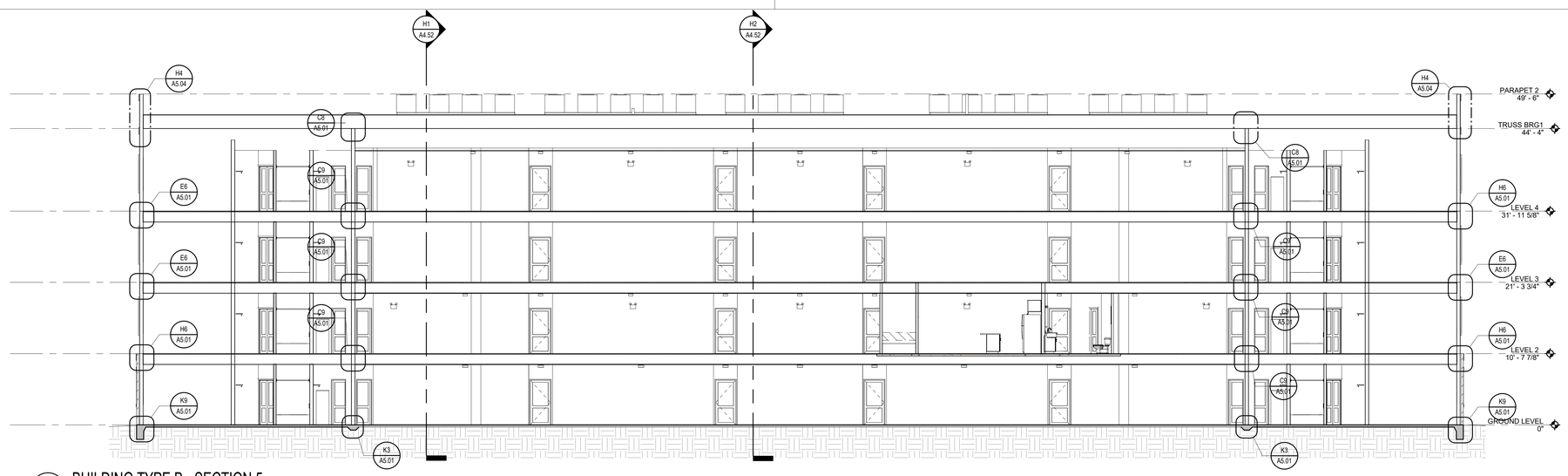

K1 BUILDING TYPE B - SECTION 5
1/8" = 1'-0"

ISSUE HISTORY

No.	Date	Description
1	04/15/2022	PERMIT SUBMITTAL

REVISION HISTORY

No.	Date	Description

© 2018 These documents and their contents are the property of FUGLEBERG KOCH - AA26002103, and are issued only for the specific project noted on these drawings. Any reproductions, extensions, or modifications of these documents without the expressed written consent of Fugleberg Koch is prohibited by law.

FUGLEBERG KOCH
2555 Temple Trail, Winter Park, FL 32789 (407) 629-0595
www. fuglebergkoch.com AA26002103

CONSULTANT

STATE OF ALABAMA
MICHAEL F. GOVE
8234
4/15/22
REGISTERED ARCHITECT

MICHAEL GOVE
8234

Drawn:	MB
Checked:	JK
Approval:	MG
Date:	04/15/2022
Project #:	5722

THE ROBERT MADISON
MADISON, ALABAMA

BUILDING TYPE B - BUILDING SECTIONS

A4.52

PLOTTED: 5/3/2022 3:30:46 PM

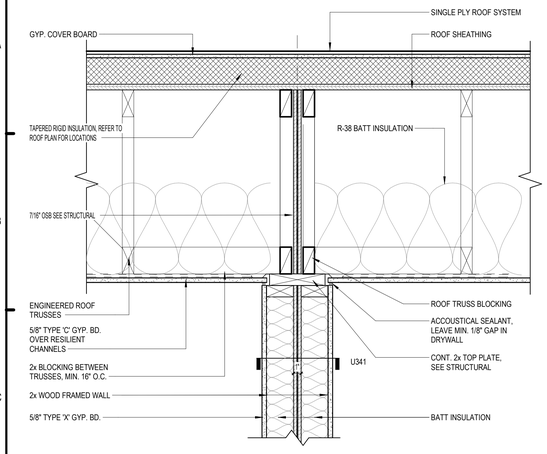

C1 PARTY WALL AT ROOF
1 1/2" = 1'-0"
C2/ A4.50

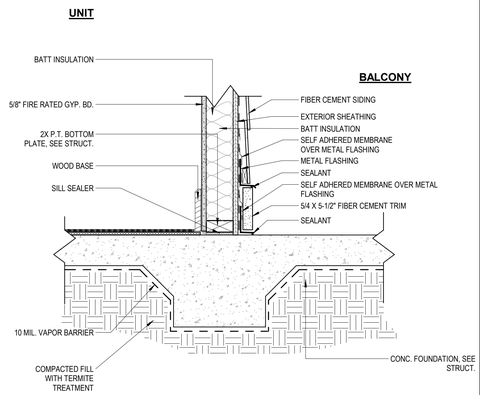

C4 PATIO WALL SECTION @ 1ST LEVEL
1 1/2" = 1'-0"

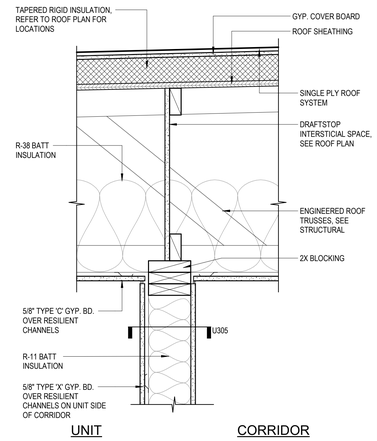

* PROVIDE BLOCKING IN KITCHEN AREA FOR CABINETS.

C8 CORRIDOR WALL @ ROOF
1 1/2" = 1'-0"
K1/ A4.52

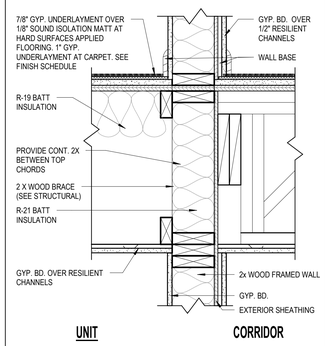

C9 CORRIDOR AT UPPER LEVEL
1 1/2" = 1'-0"

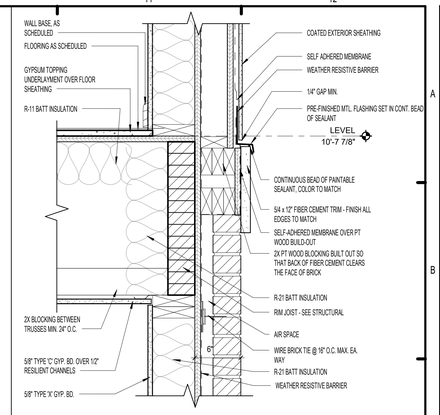

C11 WALL SECTION - BRICK @ CAP SHADOW BOX
1 1/2" = 1'-0"

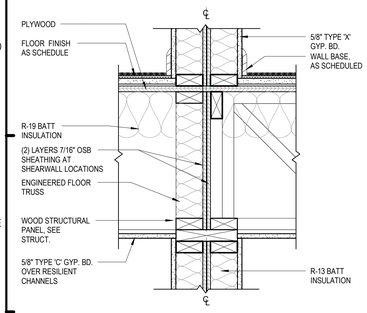

E1 PARTY WALL AT UPPER LEVELS
1 1/2" = 1'-0"
F8/ A4.50

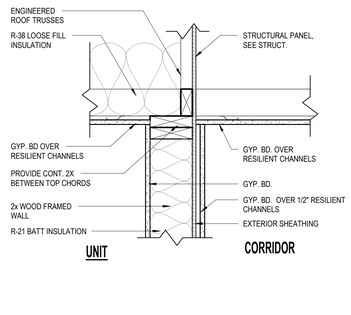

E3 CORRIDOR AT ROOF - SHEARWALL
1 1/2" = 1'-0"
G2/ A4.50

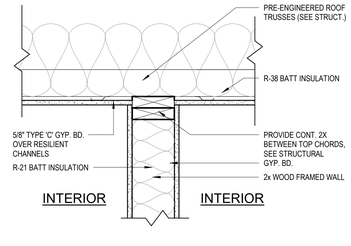

E5 UNIT WALL AT ROOF
1 1/2" = 1'-0"
C8/ A4.50

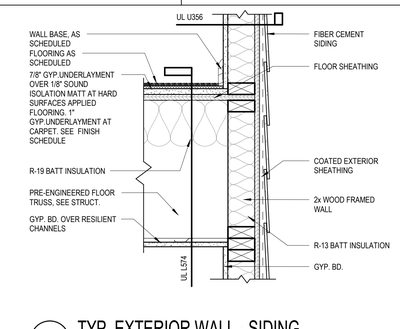

E6 TYP. EXTERIOR WALL - SIDING
1 1/2" = 1'-0"

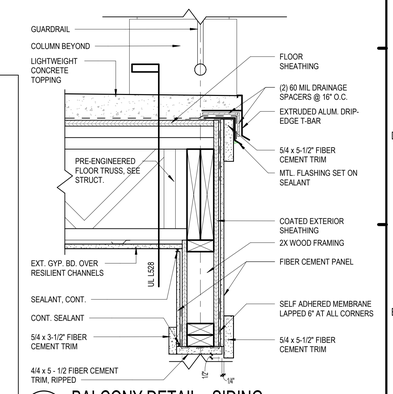

E7 BALCONY DETAIL - SIDING
1 1/2" = 1'-0"

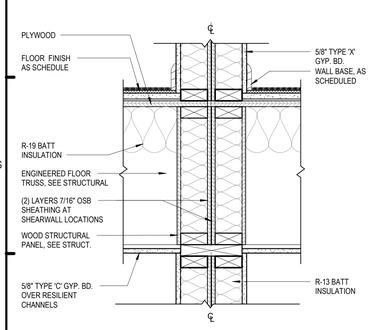

H1 PARTY WALL AT UPPER LEVELS
1 1/2" = 1'-0"
C2/ A4.50

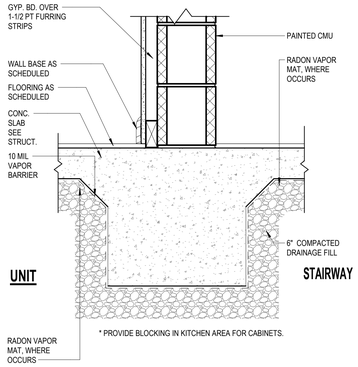

* PROVIDE BLOCKING IN KITCHEN AREA FOR CABINETS.

H2 BREEZEWAY AT FOUNDATION
1 1/2" = 1'-0"

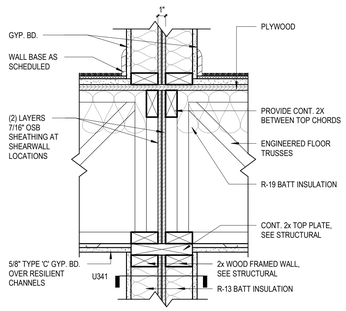

H5 PARTY WALL AT UPPER LEVELS
1 1/2" = 1'-0"
K2/ A4.50

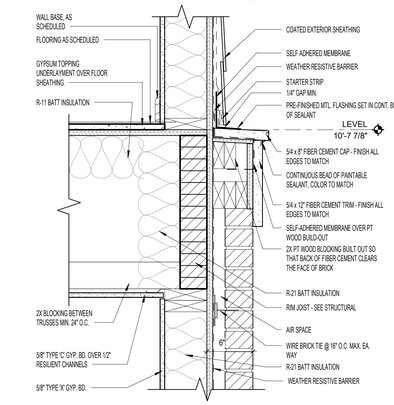

H6 WALL SECTION - BRICK @ CAP
1 1/2" = 1'-0"

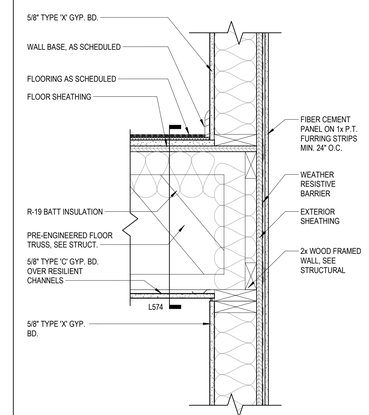

H11 TYP. EXTERIOR WALL - PANEL
1 1/2" = 1'-0"
G2/ A4.50

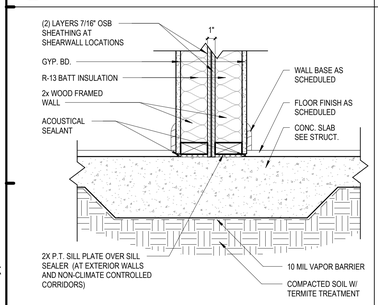

K1 PARTY WALL AT FND
1 1/2" = 1'-0"
C2/ A4.50

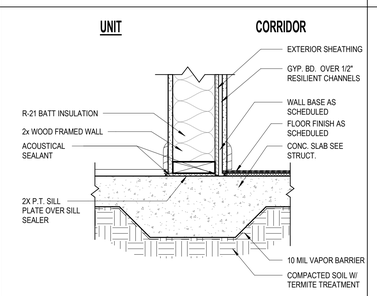

K3 CORRIDOR AT GROUND LEVEL
1 1/2" = 1'-0"
C8/ A4.50

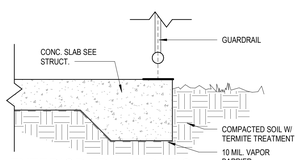

K5 EXTERIOR FDN AT PATIO
1 1/2" = 1'-0"
K1/ A4.04

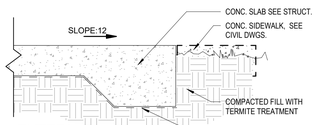

K7 EXTERIOR FDN
1 1/2" = 1'-0"
C8/ A4.50

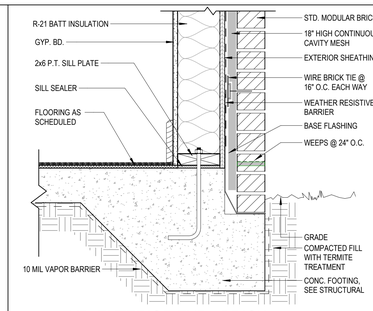

K9 TYP. EXTERIOR FND - BRICK
1 1/2" = 1'-0"
C8/ A4.50

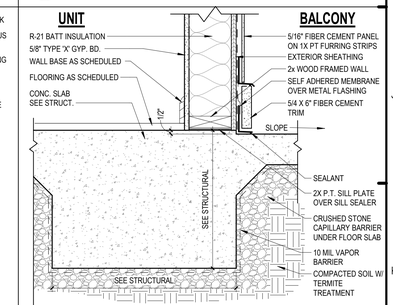

K10 FOUNDATION DETAIL - PANEL @ PATIO
1 1/2" = 1'-0"

ISSUE HISTORY

No.	Date	Description
1	04/15/2022	PERMIT SUBMITTAL

REVISION HISTORY

No.	Date	Description

FUGLEBERG KOCH
2555 Temple Trail, Winter Park, FL 32789 (407) 629-0595
www.fuglebergkoch.com AA26002103

CONSULTANT

STATE OF ALABAMA MICHAEL E. GOVE 8234 4/15/22 REGISTERED ARCHITECT

MICHAEL GOVE
8234

Drawn:	MB
Checked:	JK
Approval:	MG
Date:	04/15/2022
Project #:	5722

THE ROBERT MADISON
MADISON, ALABAMA

WALL SECTION DETAILS

A5.01

PLOTTED: 5/3/2022 3:37:12 PM

© 2015 These documents and their contents are the property of FUGLEBERG KOCH - AA26002103, and are not to be used for any purpose not specifically granted in writing by contract. Any reproduction, alteration, or modification of these documents without the expressed written consent of Fugleberg Koch is prohibited by law.

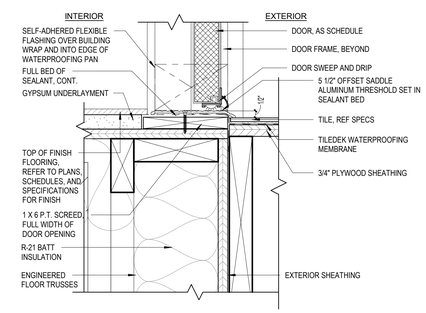

G4 BALCONY 2C & 3C DOOR THRESHOLD DETAIL
3" = 1'-0"

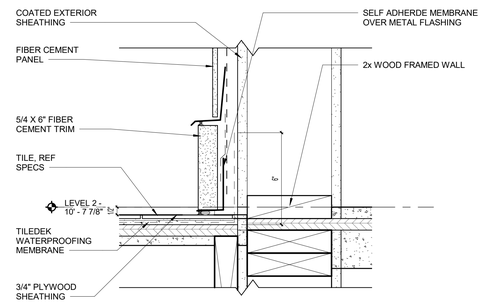

G5 BALCONY SECTION AT WALL
3" = 1'-0"

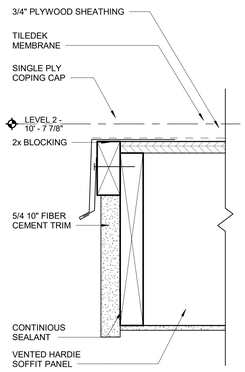

H4 AWNING DETAIL
3" = 1'-0"

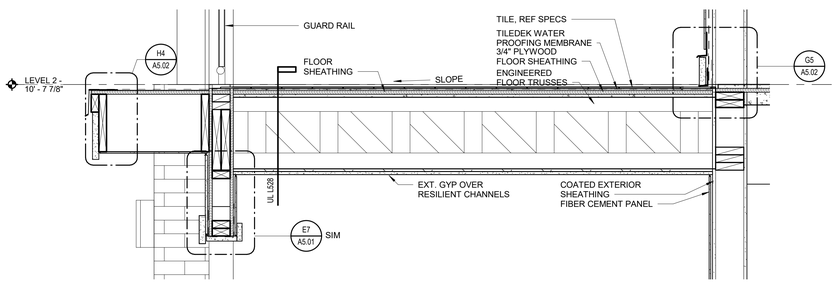

H3 BALCONY SECTION - UNIT 2C & 3C
1" = 1'-0"

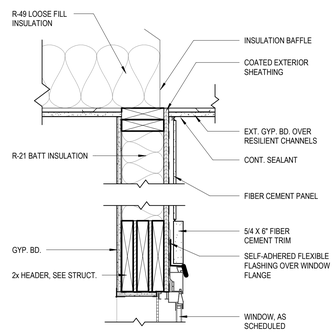

H5 BALCONY DETAIL AT ROOF LEVEL
1 1/2" = 1'-0"
C2/ A4.50

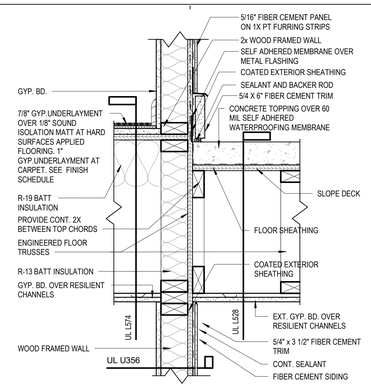

H7 BALCONY DETAIL AT UPPER LEVEL
1 1/2" = 1'-0"

ISSUE HISTORY

No.	Date	Description
1	04/15/2022	PERMIT SUBMITTAL

REVISION HISTORY

No.	Date	Description

© 2019 These documents and their contents are the property of FUGLEBERG KOCH - AA26002103, and are issued only for the specific project noted on these drawings. Any reproductions, extensions, or modifications of these documents without the expressed written consent of Fugleberg Koch is prohibited by law.

FUGLEBERG KOCH
2555 Temple Trail, Winter Park, FL 32789 (407) 629-0595
www. fuglebergkoch.com AA26002103

CONSULTANT

STATE OF ALABAMA
MICHAEL E. GOVE
8234
4/15/22
REGISTERED ARCHITECT

MICHAEL GOVE
8234

THE ROBERT MADISON
MADISON, ALABAMA

Drawn:	MB
Checked:	JK
Approval:	MG
Date:	04/15/2022
Project #:	5722

WALL SECTION DETAILS

A5.02

PLOTTED: 5/3/2022 3:37:39 PM

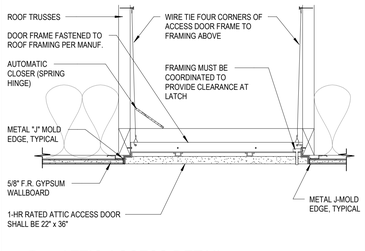

B3 ATTIC ACCESS DETAIL
1 1/2" = 1'-0"

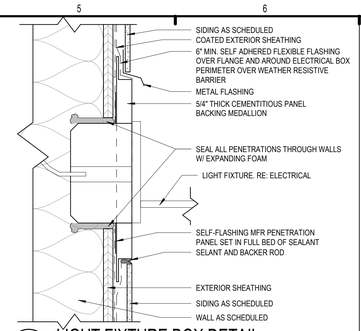

B5 LIGHT FIXTURE BOX DETAIL
3" = 1'-0"

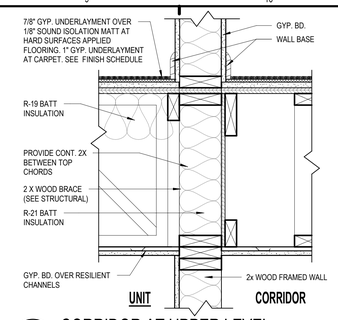

B9 CORRIDOR AT UPPER LEVEL
1 1/2" = 1'-0"

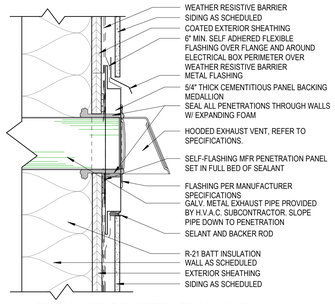

D1 EXHAUST PENETRATION (SIDING)
3" = 1'-0"

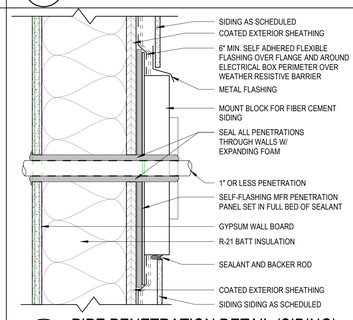

D5 PIPE PENETRATION DETAIL (SIDING)
3" = 1'-0"

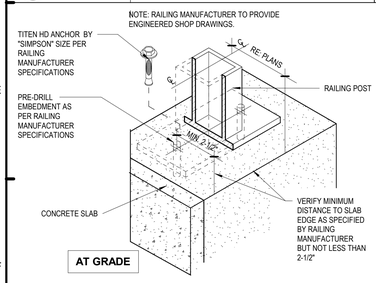

F1 RAILING ATTACHEMENT DETAIL (AXO)
3" = 1'-0"

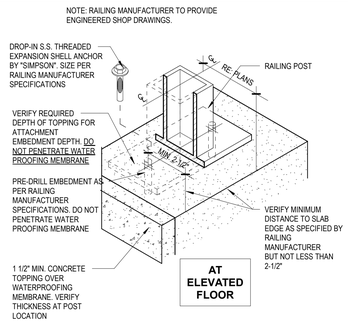

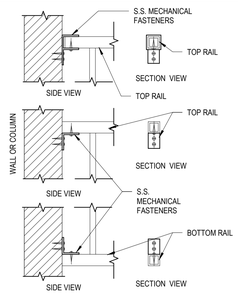

F5 RAILING ATTACHEMENT DETAIL
1 1/2" = 1'-0"

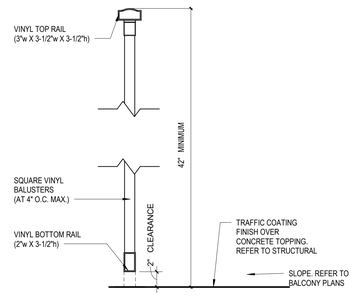

F7 VINYL GUARDRAIL DETAIL
1 1/2" = 1'-0"

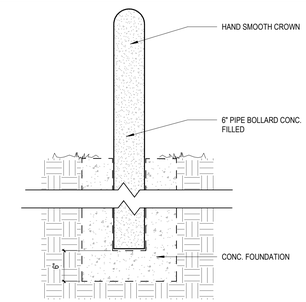

F9 BOLLARD DETAIL
1" = 1'-0"

NOTES:
*DRYER RECEPTACLE BOX TO BE INSTALLED PER MANUFACTURES REQUIREMENTS AND PER UL LISTINGS WHEN INSTALLED IN RATED WALLS.
*WALL MATERIALS ARE TO BE PER PARTITION TYPES.
*TRIM AND FINISHES ARE TO BE AS SCHEDULED.

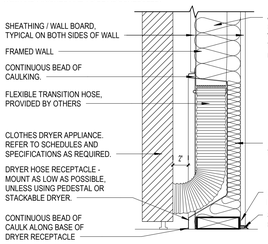

H1 DRYER HOSE RECEPTACLE
1 1/2" = 1'-0"

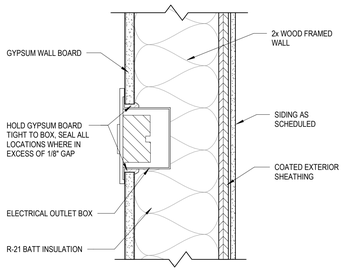

H3 OUTLET BOX DETAIL
3" = 1'-0"

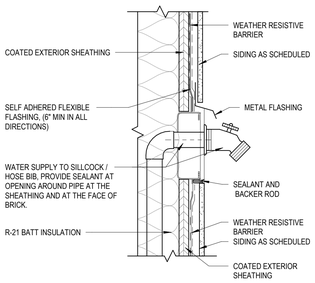

H5 HOSE BIB DETAIL (SIDING)
3" = 1'-0"

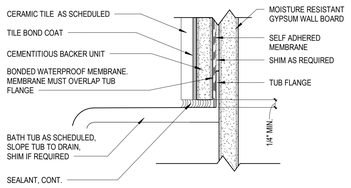

H7 ENLARGED BATHTUB DETAIL
6" = 1'-0"

ISSUE HISTORY

No.	Date	Description
1	04/15/2022	PERMIT SUBMITTAL

REVISION HISTORY

No.	Date	Description

© 2018 These documents and their contents are the property of FUGLEBERG KOCH - ARCHITECTS, and are issued for use on this specific project only. Any reproduction, alteration, or modification of these documents without the expressed written consent of Fugleberg Koch is prohibited by law.

FUGLEBERG KOCH
2555 Temple Trail, Winter Park, FL 32789 (407) 629-0595
www.fuglebergkoch.com AA26002103

CONSULTANT

STATE OF ALABAMA
MICHAEL P. GOVE
8234
4/15/22
REGISTERED ARCHITECT

MICHAEL GOVE
8234

Drawn:	MB
Checked:	JK
Approval:	MG
Date:	04/15/2022
Project #:	5722

THE ROBERT MADISON
MADISON, ALABAMA

WALL SECTION DETAILS

A5.03

PLOTTED: 5/3/2022 3:37:42 PM

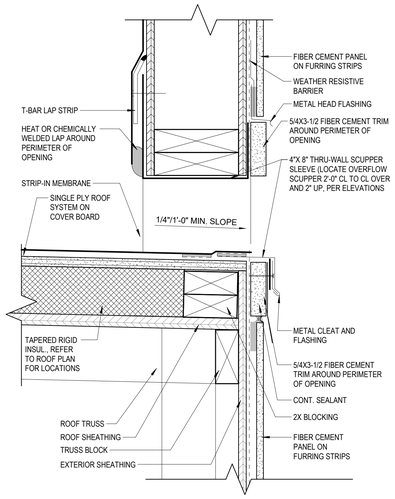

C1 OVERFLOW SCUPPER DETAIL
3" = 1'-0"

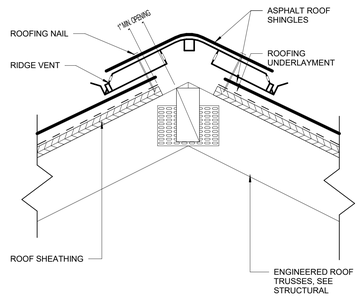

C2 ENLARGED RIDGE VENT DETAIL
3" = 1'-0"

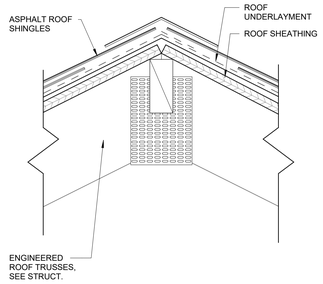

C6 ENLARGED RIDGE DETAIL
3" = 1'-0"

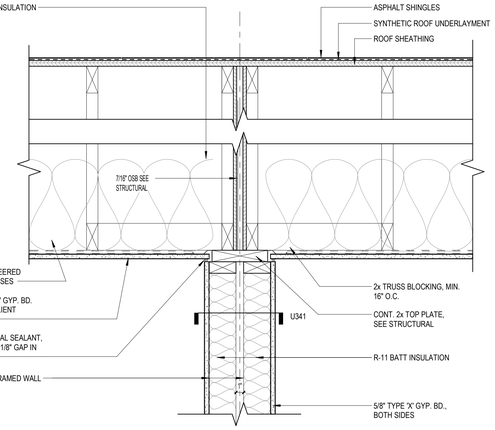

C10 TENANT SEP. @ ROOF PARA. TRUSS
1 1/2" = 1'-0"

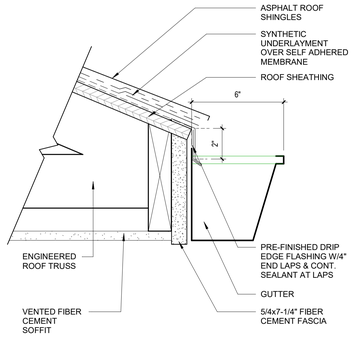

D5 ENLARGED FACIA DETAIL
3" = 1'-0"

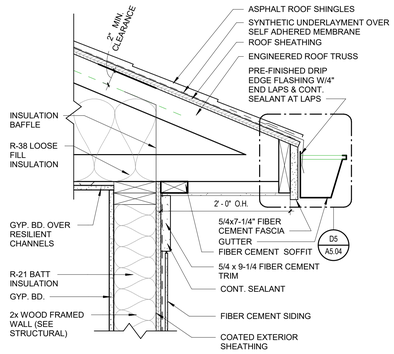

D4 TYP. ROOF VENT EAVE DETAIL
1 1/2" = 1'-0"

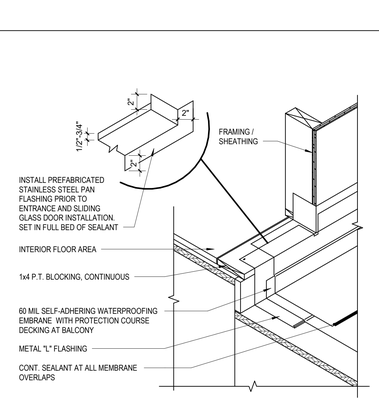

D3 BALCONY WATERPROOFING AT DOOR
1 1/2" = 1'-0"

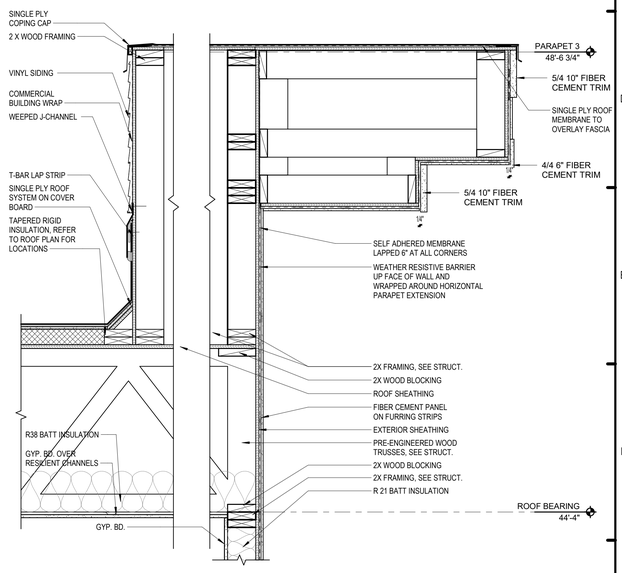

D1 CORNICE DETAIL @ PARAPET 3
1" = 1'-0"

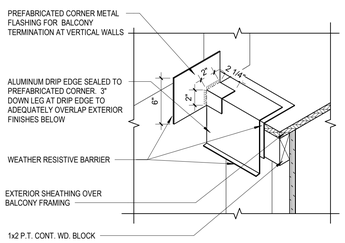

F1 BALCONY WATERPROOFING DETAIL
1 1/2" = 1'-0"

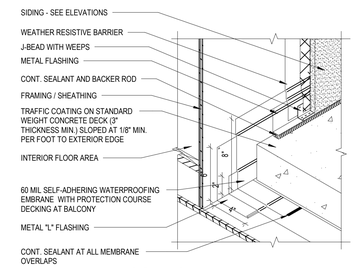

F3 WATERPROOFING AT WALL
1 1/2" = 1'-0"

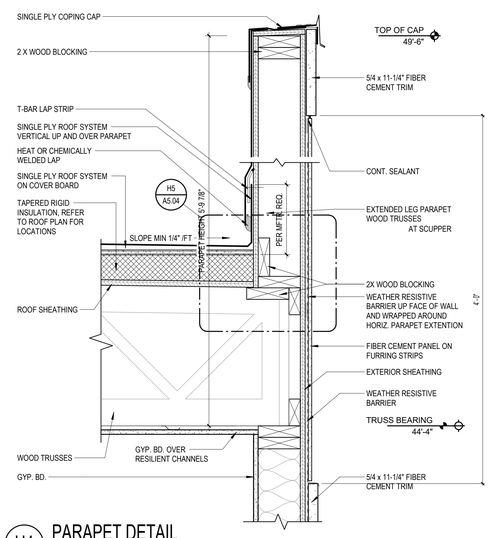

H4 PARAPET DETAIL
1 1/2" = 1'-0"

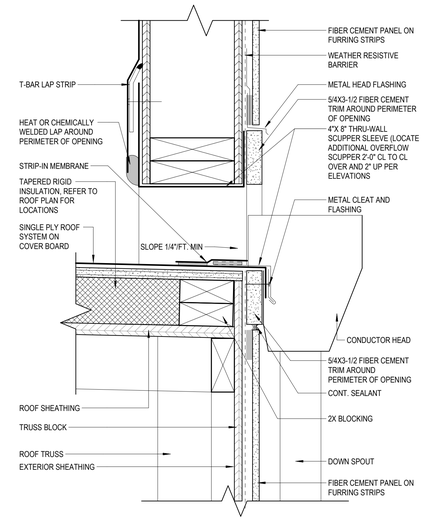

H5 PARAPET SCUPPER DETAIL
3" = 1'-0"

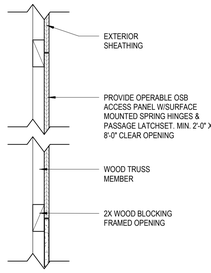

H1 DRAFTSTOP ACCESS PANEL
1 1/2" = 1'-0"

NOTE:
DETAIL IS FOR A NON-RATED PRE-MANUFACTURED DRAFTSTOP ACCESS PANEL. PANEL MAY BE FIELD BUILT. SUBMIT SHOP DRAWINGS FOR REVIEW

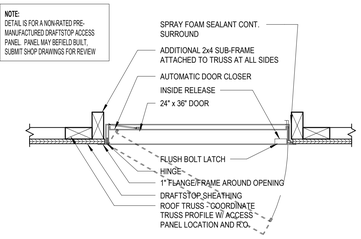

H3 DRAFTSTOP ACCESS DOOR
1 1/2" = 1'-0"

ISSUE HISTORY

No.	Date	Description
1	04/15/2022	PERMIT SUBMITTAL

REVISION HISTORY

No.	Date	Description

FUGLEBERG KOCH
2555 Temple Trail, Winter Park, FL 32789 (407) 629-0595
www. fuglebergkoch.com AA26002103

CONSULTANT

STATE OF ALABAMA MICHAEL T. GOVE 8234 4/15/22 REGISTERED ARCHITECT

MICHAEL GOVE
8234

Drawn:	MB
Checked:	JK
Approval:	MG
Date:	04/15/2022
Project #:	5722

THE ROBERT MADISON
MADISON, ALABAMA

ROOF DETAILS

A5.04

PLOTTED: 5/3/2022 3:37:46 PM

© 2018 These documents and their contents are the property of FUGLEBERG KOCH. AA26002103. Any reproduction, alteration, or modification of these documents without the expressed written consent of Fugleberg Koch is prohibited by law.

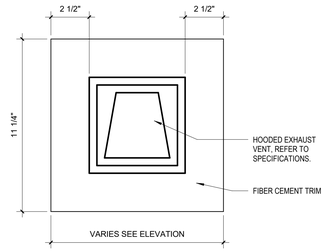

B7 DRYER/ EXHAUST PLINTH DETAIL
3" = 1'-0"

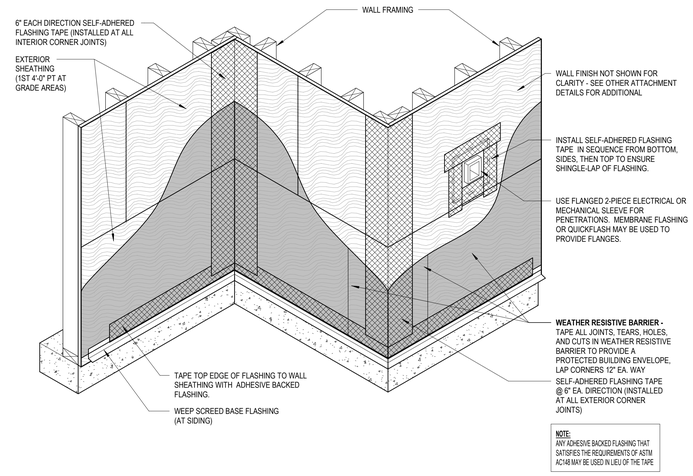

D9 CORNER TAPING AND FLASHING INSTALLATION
12" = 1'-0"

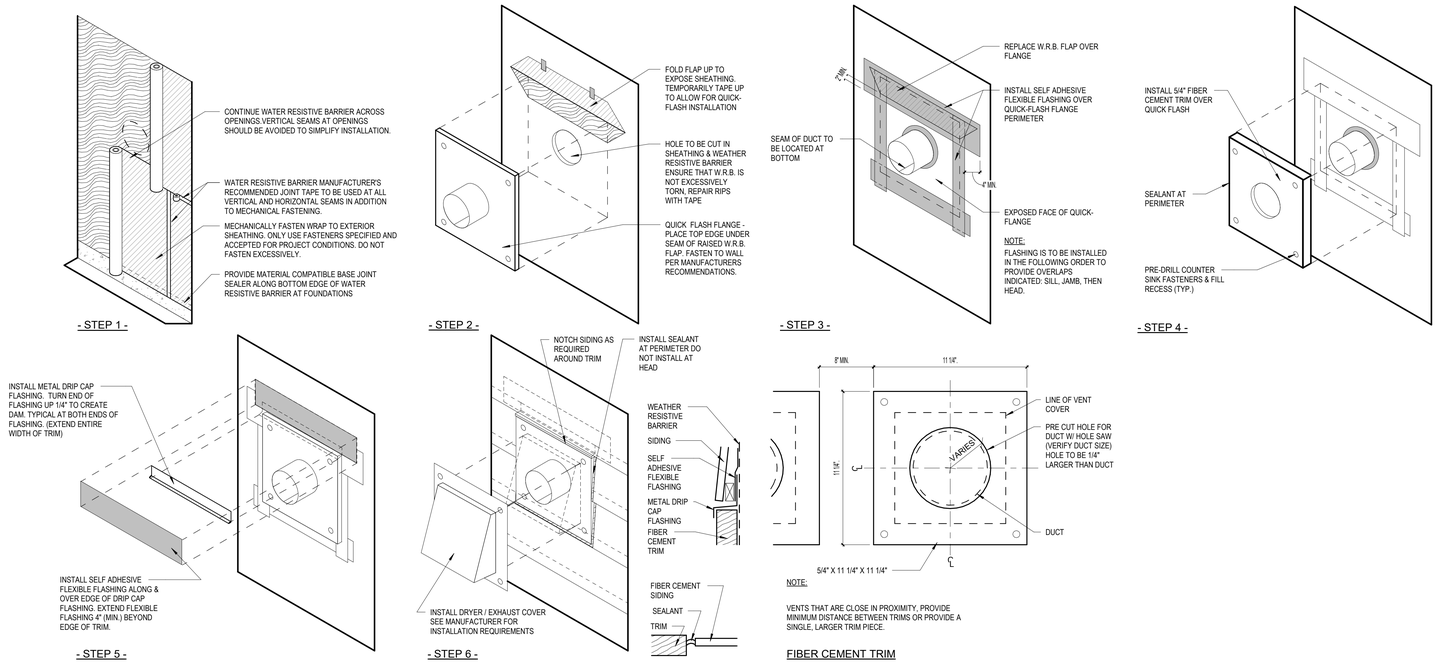

H5 DRYER / EXHAUST HOOD DETAILS
12" = 1'-0"

ISSUE HISTORY

No.	Date	Description
1	04/15/2022	PERMIT SUBMITTAL

REVISION HISTORY

No.	Date	Description

FUGLEBERG KOCH
2555 Temple Trail, Winter Park, FL 32789 (407) 629-0595
www. fuglebergkoch.com AA26002103

CONSULTANT

STATE OF ALABAMA MICHAEL E. GOVE 8234 4/15/22 REGISTERED ARCHITECT

MICHAEL GOVE
8234

THE ROBERT MADISON
MADISON, ALABAMA

Drawn:	MB
Checked:	JK
Approval:	MG
Date:	04/15/2022
Project #:	5722

MISCELLANEOUS DETAIL

A5.05

PLOTTED: 5/3/2022 3:37:49 PM

© 2018 These documents and their contents are the property of FUGLEBERG KOCH. AA26002103. and are loaned only for the specific project noted on these drawings. Any reproductions, extensions, or modifications of these documents without the expressed written consent of Fugleberg Koch is prohibited by law.

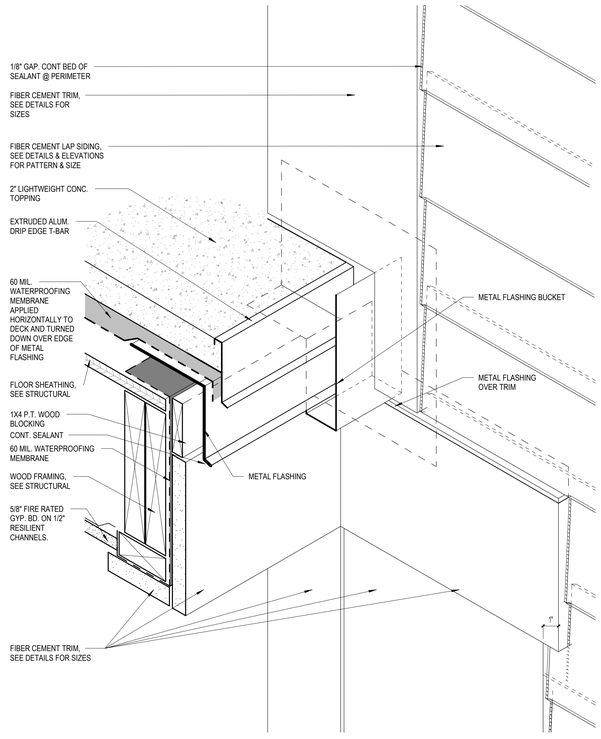

F1 BALCONY TRIM ISOMETRIC
3" = 1'-0"

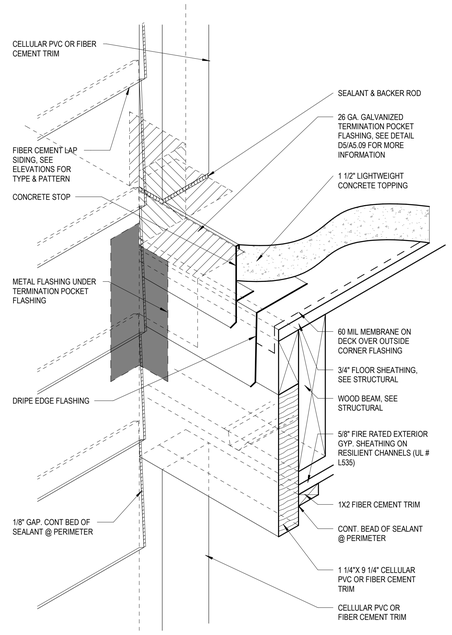

F2 BALCONY FLASHING ISOMETRIC
3" = 1'-0"

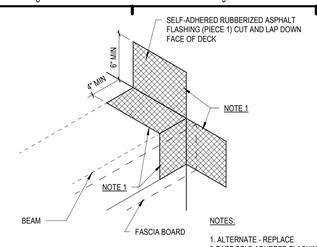

NOTES:

1. ALTERNATE - REPLACE 3-PART SELF-ADHERED FLASHING ASSEMBLY SHOWN IN STEPS 1-3 W/ PREFINISHED METAL FLASHING AND SECURE W/ NAILS IN TOP VERTICAL PLANE
2. PRIME ALL SHEET METAL AND PLYWOOD SURFACES W/ ASPHALTIC PRIMER PRIOR TO APPLYING MEMBRANE

B1 WP-STEP1
1 1/2" = 1'-0"

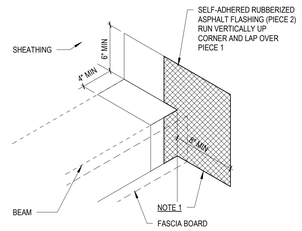

B2 WP-STEP2
1 1/2" = 1'-0"

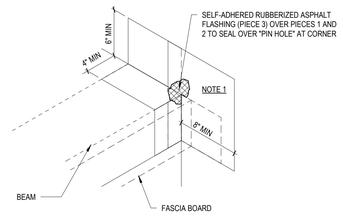

F3 WP-STEP 3
1 1/2" = 1'-0"

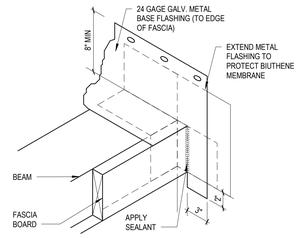

F4 WP-STEP 4
1 1/2" = 1'-0"

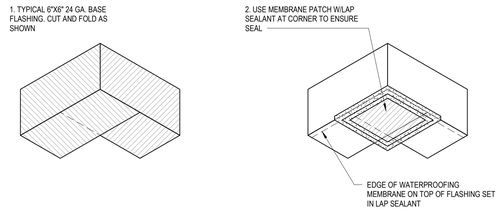

H1 DECK EDGE AT INSIDE CORNER DETAIL
3" = 1'-0"

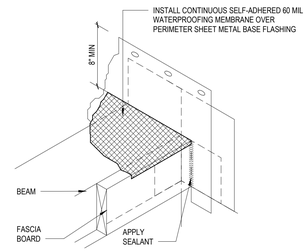

H2 WP-STEP 5
1 1/2" = 1'-0"

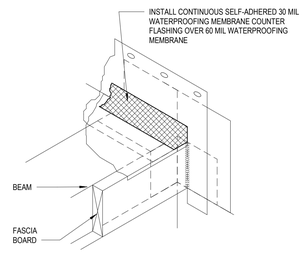

H3 WP-STEP 6
1 1/2" = 1'-0"

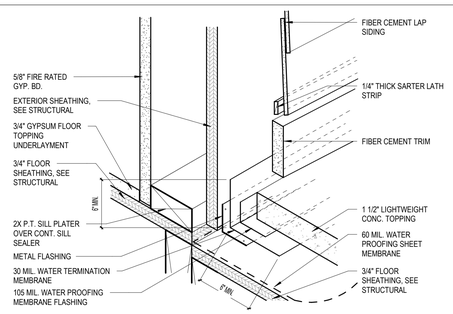

K1 FLASHING DETAIL @ BALCONY/BREEZEWAY
1 1/2" = 1'-0"

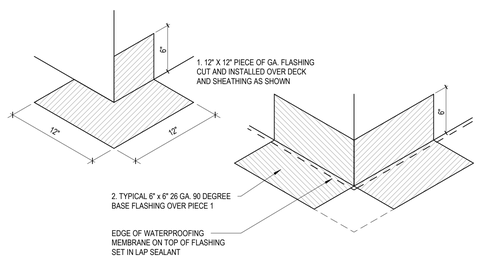

K2 DECK EDGE AT OUTSIDE CORNER DETAIL
1 1/2" = 1'-0"

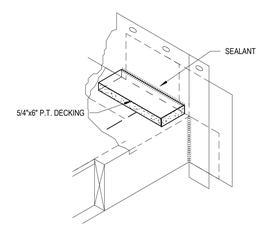

K3 WP-STEP 7
1 1/2" = 1'-0"

ISSUE HISTORY

No.	Date	Description
1	04/15/2022	PERMIT SUBMITTAL

REVISION HISTORY

No.	Date	Description

FUGLEBERG KOCH
2555 Temple Trail, Winter Park, FL 32789 (407) 629-0595
www. fuglebergkoch.com AA26002103

CONSULTANT

STATE OF ALABAMA LICENSED MICHAEL GOVE 8234 4/15/22 REGISTERED ARCHITECT

MICHAEL GOVE
8234

THE ROBERT MADISON
MADISON, ALABAMA

Drawn:	MB
Checked:	JK
Approval:	MG
Date:	04/15/2022
Project #:	5722

PENETRATION AND FLASHING DETAILS

A5.06

PLOTTED: 5/3/2022 3:37:52 PM

© 2018 These documents and their contents are the property of FUGLEBERG KOCH - AA26002103. and are loaned only to the specific project noted on these drawings. Any reproductions, extensions, or modifications of these documents without the expressed written consent of Fugleberg Koch is prohibited by law.

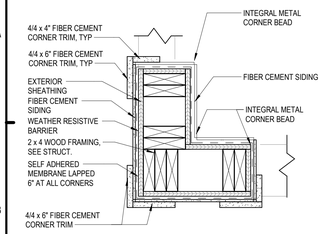

B5 SIDING CORNER @ BALCONY 1
1 1/2" = 1'-0" E2/ A2.01

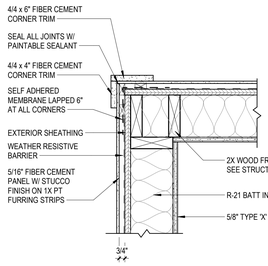

B6 OUTSIDE CORNER - PANEL
1 1/2" = 1'-0" E2/ A2.01

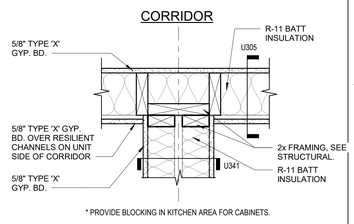

* PROVIDE BLOCKING IN KITCHEN AREA FOR CABINETS.

B8 CORRIDOR @ PARTY WALL
1 1/2" = 1'-0" E2/ A2.01

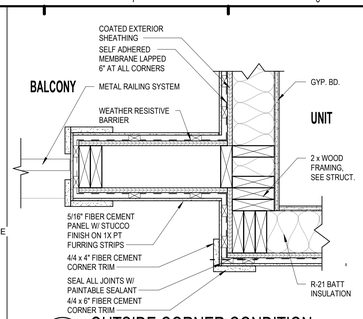

B9 OUTSIDE CORNER CONDITION
1 1/2" = 1'-0" K3/ A2.04

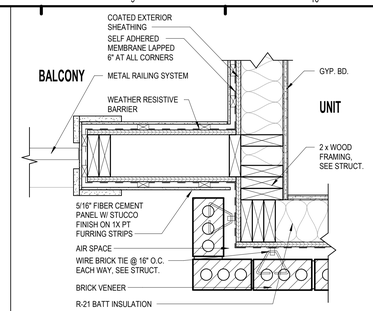

B10 OUTSIDE CORNER CONDITION @ BRICK
1 1/2" = 1'-0"

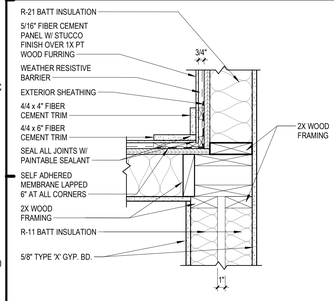

D1 PARTY WALL @ INSIDE CORNER - PANEL
1 1/2" = 1'-0" E2/ A2.01

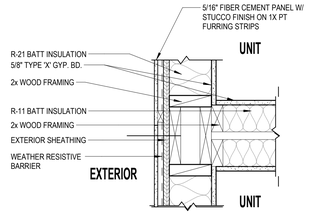

D3 PARTY WALL @ EXTERIOR - PANEL
1 1/2" = 1'-0" E2/ A2.01

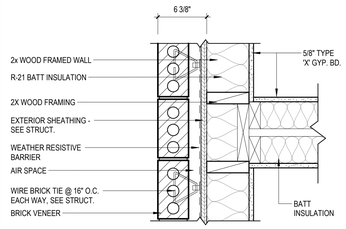

D5 PARTY WALL @ EXTERIOR - BRICK
1 1/2" = 1'-0" K2/ A2.01

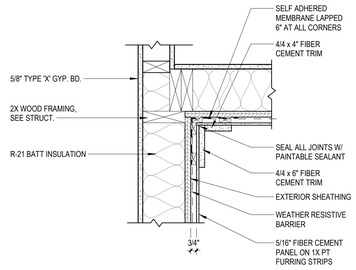

D6 INSIDE CORNER - PANEL
1 1/2" = 1'-0" E2/ A2.01

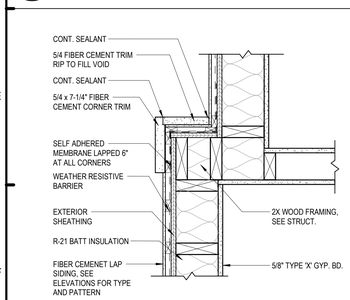

F1 PANEL @ WALL JOG
1 1/2" = 1'-0" E2/ A2.01

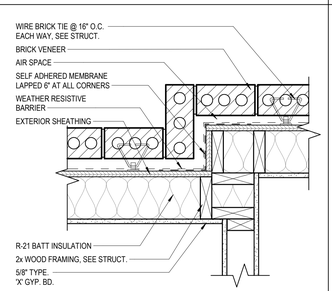

F2 BRICK @ WALL JOG
1 1/2" = 1'-0" K2/ A2.01

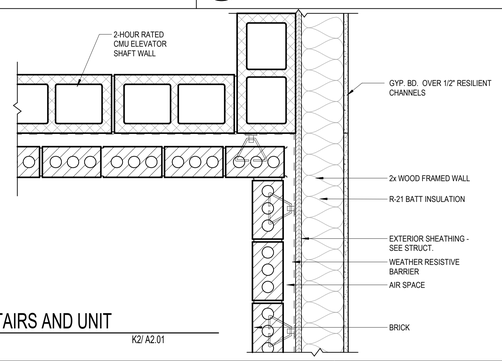

F6 OUTSIDE STAIRS AND UNIT
1 1/2" = 1'-0" K2/ A2.01

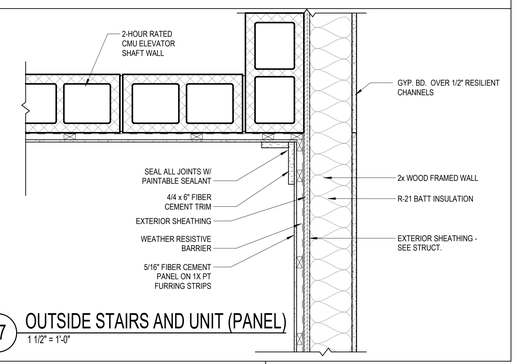

F7 OUTSIDE STAIRS AND UNIT (PANEL)
1 1/2" = 1'-0"

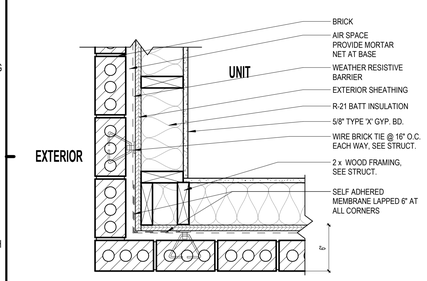

H1 OUTSIDE CORNER - BRICK OUTSIDE CORNER
1 1/2" = 1'-0" K2/ A2.01

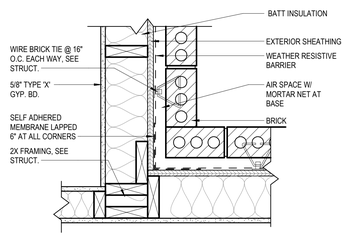

H4 INSIDE CORNER - BRICK
1 1/2" = 1'-0" K2/ A2.01

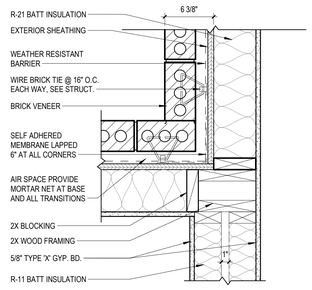

H5 PARTY WALL @ INSIDE CORNER - BRICK
1 1/2" = 1'-0" K2/ A2.01

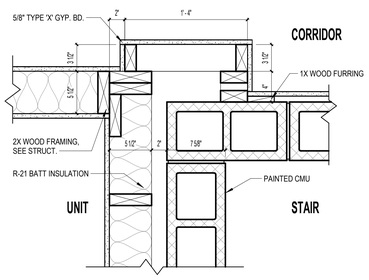

K1 WOOD WALL TO STAIR CMU TRANSITION
1 1/2" = 1'-0" E3/ A2.04

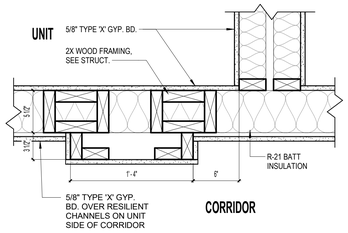

K4 BUMP-OUT DETAIL
1 1/2" = 1'-0" E3/ A2.04

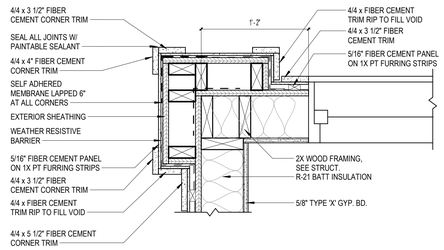

K6 OUTSIDE CORNER - PANEL SHADOW BOX
1 1/2" = 1'-0"

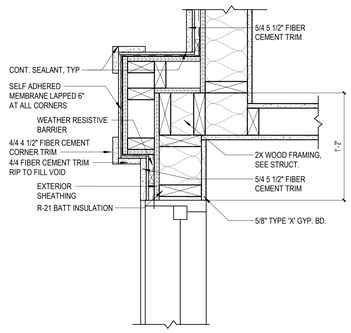

K7 PANEL @ WALL JOG SHADOW BOX
1 1/2" = 1'-0"

ISSUE HISTORY

No.	Date	Description
1	04/15/2022	PERMIT SUBMITTAL

REVISION HISTORY

No.	Date	Description

FUGLEBERG KOCH
2555 Temple Trail, Winter Park, FL 32789 (407) 629-0595
www.fuglebergkoch.com AA26002103

CONSULTANT

STATE OF ALABAMA MICHAEL E. GOVE 8234 4/15/22 REGISTERED ARCHITECT

MICHAEL GOVE
8234

Drawn:	MB
Checked:	JK
Approval:	MG
Date:	04/15/2022
Project #:	5722

THE ROBERT MADISON
MADISON, ALABAMA

PLAN DETAILS

A6.01

PLOTTED: 5/3/2022 3:37:56 PM

© 2013 These documents and their contents are the property of FUGLEBERG KOCH ARCHITECTS. Any reproduction, alteration, or modification of these documents without the expressed written consent of Fugleberg Koch is prohibited by law.

DOOR SCHEDULE @ UNITS

DOOR					GLAZING TYPE	FRAME				
TYPE	WIDTH	HEIGHT	THICKNESS	MATERIAL		MATERIAL	TYPE	DOOR RATING	HARDWARE SET	REMARKS
U01	3' - 0"	6' - 8"	1 3/8"	FG		HM	A	20 MIN.	1	
U02	2' - 10"	6' - 8"	1 3/8"	WD		WD	B		3	
U03	2' - 8"	6' - 8"	1 3/8"	WD		WD	B		3	
U04	5' - 0"	6' - 8"	1 3/8"	WD		WD	C		5	
U05	3' - 0"	6' - 8"	1 3/8"	WD		WD	C		5	
U07	1' - 4"	6' - 8"	1 3/8"	WD		WD	B		4	
U09	5' - 0"	6' - 8"	1 3/8"	WD		WD	B		7	
U10	3' - 0"	6' - 8"	1 3/8"	FG/GLASS		HM	E		2	PROVIDE SAFETY GLAZING, INSULATED
U29	3' - 0"	6' - 8"	1 3/8"	WD		WD	B		3	
U30	2' - 8"	6' - 8"	1 3/8"	WD		WD	C		5	
U030	3' - 0"	6' - 8"	1 3/8"	WD		WD	C		5	
U46	4' - 0"	6' - 8"	1 3/8"	WD		WD	C		5	
U57	3' - 0"	6' - 8"	1 3/8"	WD		WD	C		5	

DOOR SCHEDULE @ COMMON AREAS

TYPE	WIDTH	HEIGHT	THICKNESS	MATERIAL	GLAZING TYPE	FRAME MATERIAL	TYPE	DOOR RATING	HARDWARE SET	REMARKS
G03	9' - 0"	8' - 0"	1 1/2"	MTL	-	MTL	J	-	-	GARAGE DOOR
G05	3' - 0"	8' - 0"	1 3/8"	HM	-	HM	A	1.5HR	11	
G06	10' - 0"	8' - 0"	1 1/2"	MTL	-	MTL	J	-	-	GARAGE DOOR
G07	3' - 0"	6' - 8"	1 3/8"	FG	-	HM	A	-	9	
G08	13' - 0"	10' - 0"	1 3/4"	MTL	-	MTL	L	-	-	TRASH ENCLOSURE GATES
G11	3' - 0"	8' - 0"	1 3/4"	FG/GLASS	TEMP	HM	E	-	10	ENTRANCE DOOR

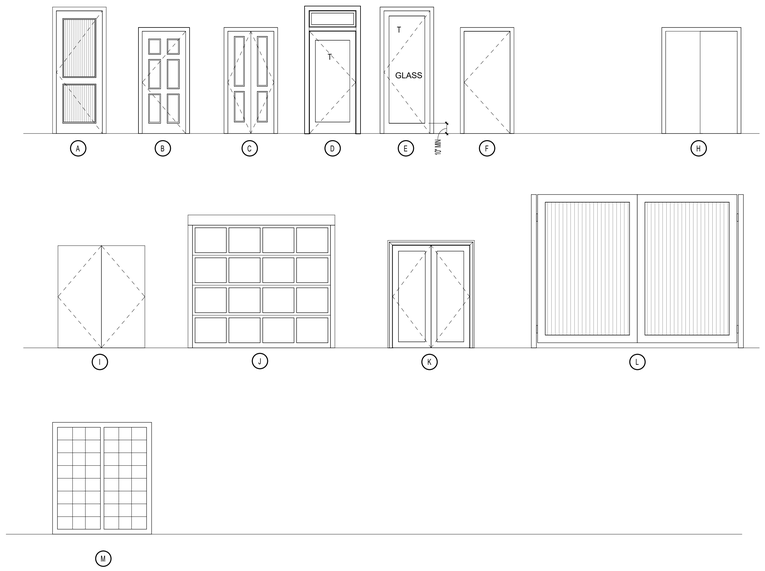

DOOR TYPES
1/4" = 1'-0"

DOOR NOTES:

A. ALL FIRE DOORS AND FRAMES TO HAVE APPROVED CLOSERS AND LATCHING MECHANISMS.

B. THRESHOLDS AT EXTERIOR DOORS ARE NO HIGHER THAN 1/2" MAX.

C. VERIFY ROUGH OPENING REQUIRED WITH DOOR FRAME MANUFACTURER.

D. PROVIDE WEATHERSTRIPING AT ALL EXTERIOR DOORS.

E. DOOR MANUFACTURER SHALL PROVIDE CERTIFICATION, SIGNED AND SEAL BY A REGISTERED **ALABAMA** PROFESSIONAL ENGINEER THAT:

1- DOORS WILL BE ABLE TO WITHSTAND REQUIRED WIND LOADS AND PRESSURE.

2- TO SUPPLY TYPE AND NUMBER OF FASTENERS REQUIRED TO SECURE FRAME TO HEAD, JAMBS OF ALL DOOR OPENINGS.

F. THE AVERAGE TEMPERATURE RISE DEVELOPED ON THE UNEXPOSED SIDE SHALL NOT EXCEED 450° F (232° C) AT THE END OF 30 MINUTES OF STANDARD FIRE TEST EXPOSURE

HARDWARE NOTES:

A. REFER TO SPECIFICATIONS FOR HARDWARE GROUPS. ALL HARDWARE TO MEET INTERNATIONAL BUILDING CODE REQUIREMENTS AND MEET FAIR HOUSING GUIDELINES FOR ACCESSIBLE AND USABLE DOORS.

B. PRIMARY ENTRY DOORS OF DWELLING UNIT EXTERIOR SIDE, PUBLIC AND COMMON USED DOORS MUST PROVIDE 32" CLEAR WIDTH AND HAVE 1/2" THRESHOLDS.

C. BALCONY DOOR THRESHOLD TO NOT EXCEED 1/2" FOR IMPERVIOUS CONSTRUCTION OF THE WET SIDE.

D. ALL UNITS SHALL HAVE LEVER TYPE HARDWARE ON ALL DOORS. IF CLOSER IS PROVIDED, SHALL NOT BE REQUIRED TO HAVE MORE THAN 5 LBF. TO OPERATE AND CLOSE UNLESS REQUIRED BY LOCAL FIRE AUTHORITY.

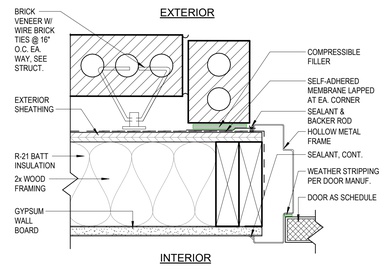

F3 EXT. DOOR JAMB DETAIL - BRICK
3" = 1'-0"

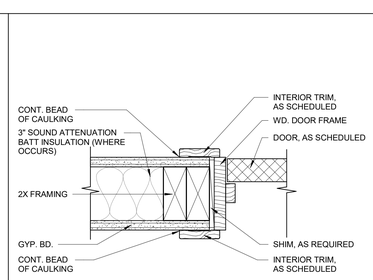

F5 TYPICAL INTERIOR DOOR JAMB DETAIL
3" = 1'-0"

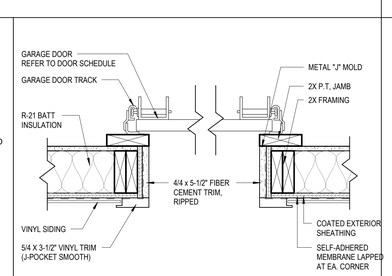

F7 GARAGE DOOR JAMB DETAIL
1 1/2" = 1'-0"

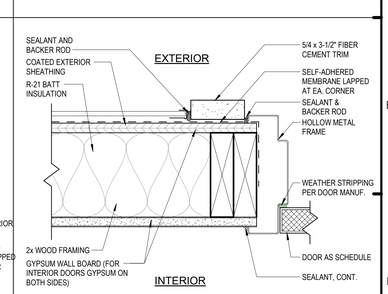

F11 EXT. DOOR JAMB DETAIL - SIDING
3" = 1'-0"

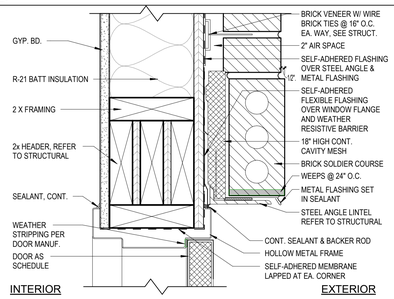

H3 EXT. DOOR HEAD DETAIL - BRICK
3" = 1'-0"

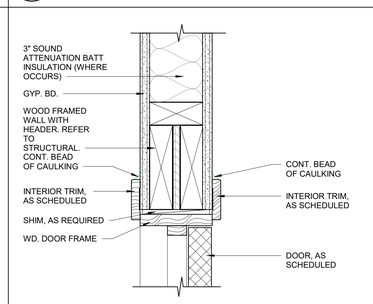

H5 TYPICAL INTERIOR DOOR HEAD DETAIL
3" = 1'-0"

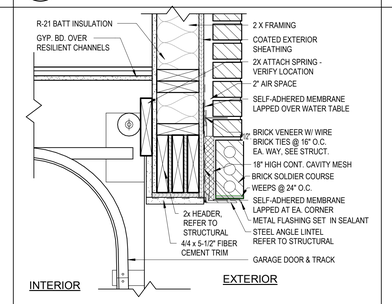

H7 GARAGE DOOR HEAD DETAIL
1 1/2" = 1'-0"

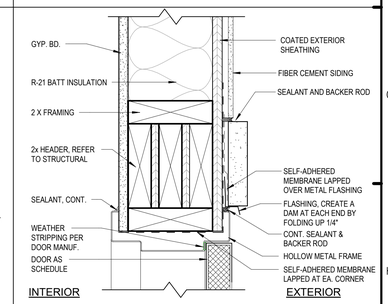

H11 EXT. DOOR HEAD DETAIL - SIDING
3" = 1'-0"

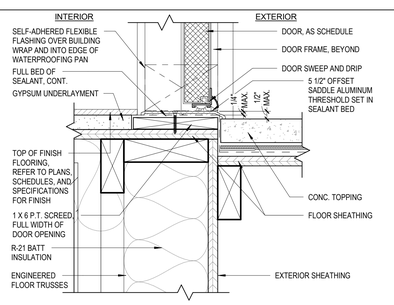

K3 EXT. THRESHOLD DETAIL-BALCONY/STAIR
3" = 1'-0"

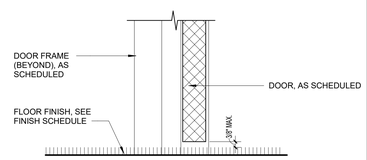

K5 INTERIOR DOOR THRESHOLD DETAIL
3" = 1'-0"

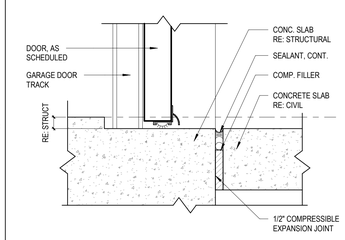

K7 GARAGE DOOR THRESHOLD DETAIL
3" = 1'-0"

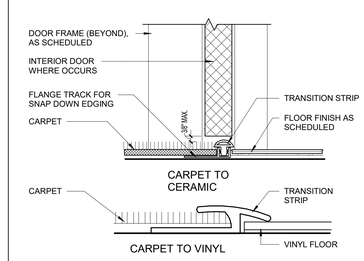

K9 EXT. DOOR THRESHOLD CONDITIONS
3" = 1'-0"

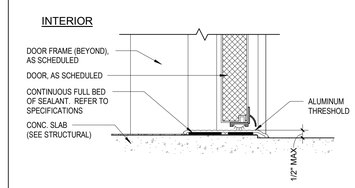

K11 EXTERIOR DOOR THRESHOLD DETAIL
3" = 1'-0"

ISSUE HISTORY

No.	Date	Description
1	04/15/2022	PERMIT SUBMITTAL

REVISION HISTORY

No.	Date	Description

© 2015 These documents and their contents are the property of FUGLEBERG KOCH ARCHITECTS. Any reproductions, extensions, or modifications of these documents without the expressed written consent of Fugleberg Koch is prohibited by law. These documents are prepared only for the specific project noted on these drawings.

FUGLEBERG KOCH
2555 Temple Trail, Winter Park, FL 32789 (407) 629-0595
www.fuglebergkoch.com AA26002103

CONSULTANT

STATE OF ALABAMA MICHAEL E. GOVE 8234 4/15/22 REGISTERED ARCHITECT

MICHAEL GOVE
8234

THE ROBERT MADISON
MADISON, ALABAMA

Drawn:	MB
Checked:	JK
Approval:	MG
Date:	04/15/2022
Project #:	5722

DOOR SCHEDULE AND DETAILS

A7.01

PLOTTED: 5/3/2022 3:38:14 PM

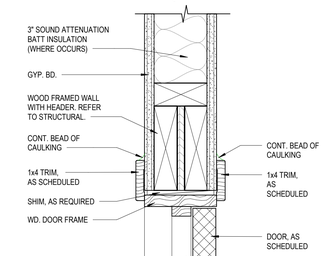

B9 TYPICAL INTERIOR DOOR HEAD DETAIL
3" = 1'-0"

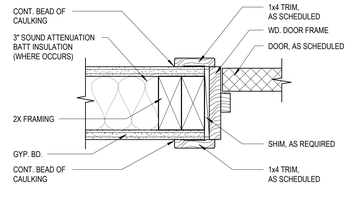

D9 TYPICAL INTERIOR DOOR JAMB DETAIL
3" = 1'-0"

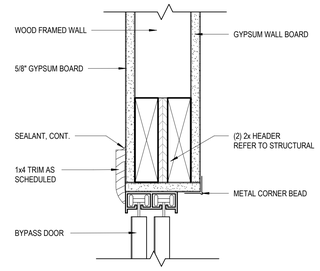

F7 BI-PASS DOOR HEAD DETAIL
3" = 1'-0"

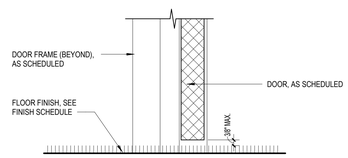

F9 INTERIOR DOOR THRESHOLD DETAIL
3" = 1'-0"

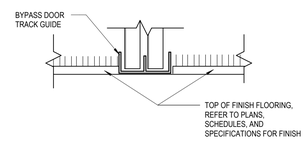

H7 BI-FOLD DOOR THRESHOLD DETAIL
3" = 1'-0"

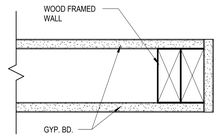

H9 CASED OPENING JAMB DETAIL
3" = 1'-0"

ISSUE HISTORY

No.	Date	Description
1	04/15/2022	PERMIT SUBMITTAL

REVISION HISTORY

No.	Date	Description

© 2018 These documents and their contents are the property of FUGLEBERG KOCH - AA26002103, and are issued only for the specific project noted on these drawings. Any reproductions, extensions, or modifications of these documents without the expressed written consent of Fugleberg Koch is prohibited by law.

FUGLEBERG KOCH
2555 Temple Trail, Winter Park, FL 32789 (407) 629-0595
www. fuglebergkoch.com AA26002103

CONSULTANT

STATE OF ALABAMA
MICHAEL E. GOVE
8234
4/15/22
REGISTERED ARCHITECT

MICHAEL GOVE
8234

THE ROBERT MADISON
MADISON, ALABAMA

Drawn:	MB
Checked:	JK
Approval:	MG
Date:	04/15/2022
Project #:	5722

DOOR DETAILS

A7.02

PLOTTED: 5/3/2022 3:38:16 PM

WINDOW SCHEDULE								
	WINDOW UNIT			GLAZING			FRAME	
TYPE	WIDTH	HEIGHT	HEAD HEIGHT	THICKNESS	U VALUE	SHGC	MATERIAL	REMARKS
I	3' - 0"	5' - 0"	8' - 0"	1/4" TEMP	.30	.25	HM	
L	3' - 0"	5' - 0"	8' - 0"	3/4"	0.34	0.27	VINYL	LOW-E
LL	3' - 0"	4' - 0"		3/4"	0.34	0.27	VINYL	LOW-E
O	2' - 10"	2' - 10"						
R	3' - 0"	6' - 0"		3/4"	0.34	0.27	VINYL	LOW-E
SS	1' - 6"	8' - 0"	8' - 0"					

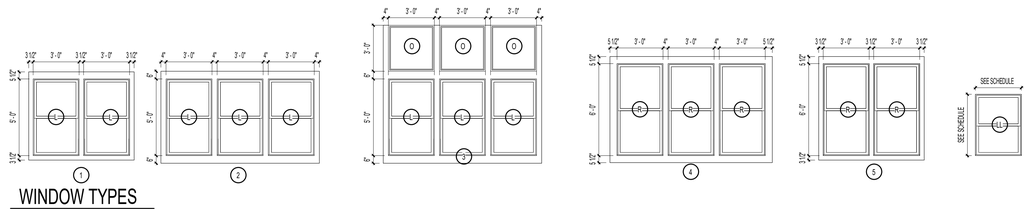

WINDOW TYPES
1/4" = 1'-0"

WINDOW NOTES:

A. VERIFY ROUGH OPENING REQUIRED WITH WINDOW MANUFACTURER.

B. WINDOW MANUFACTURER SHALL PROVIDE CERTIFICATION, SIGNED AND SEAL BY A REGISTERED **ALABAMA** PROFESSIONAL THAT:

1- WINDOWS WILL BE ABLE TO WITHSTAND REQUIRED WIND LOADS AND PRESSURE.

2- TO SUPPLY TYPE AND NUMBER OF FASTENERS REQUIRED TO SECURE FRAME TO HEAD, JAMBS & SILL OF ALL WINDOW OPENINGS.

C. PROVIDE SEALANT AT ALL SCREW-HOLES PROVIDED FOR FASTENING PRIOR TO FASTENER INSTALLATION.

D. WINDOWS UNITS SHALL BE ANCHOR THROUGH THE JAMB, ANCHORS SHALL BE SECURELY FASTENED IN TO THE STRUCTURAL MATERIAL

E. PROVIDE TEMPERED GLASS AT ALL WINDOWS LOCATIONS WHERE THE FOLLOWING CONDITIONS EXIST.

1. LOWER SASH IF SILL HEIGHT IS BELOW 18"
2. GLAZING ADJACENT TO A DOOR WHERE THE NEAREST VERTICAL EDGE OF THE GLAZING IS WITHIN A 24 INCH ARC OF EITHER VERTICAL EDGE OF THE DOOR IN A CLOSED POSITION.
3. TOP EDGE GREATER THAN 36" ABOVE THE FINISHED FLOOR.
4. THE EXPOSED AREA OF AN INDIVIDUAL WINDOW PANE IS GREATER THAN 9 SQ. FT.

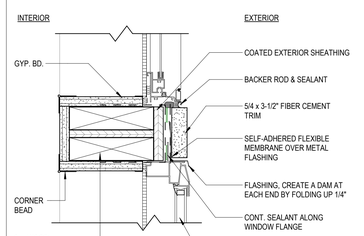

D9 TRANSOM WINDOW HEAD/SILL
3" = 1'-0"

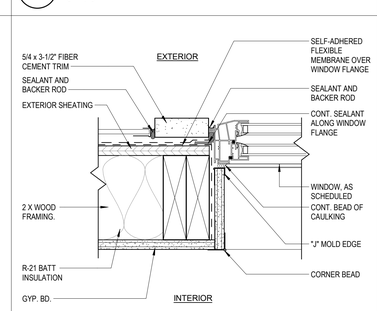

F9 WINDOW JAMB DETAIL AT SIDING
3" = 1'-0"

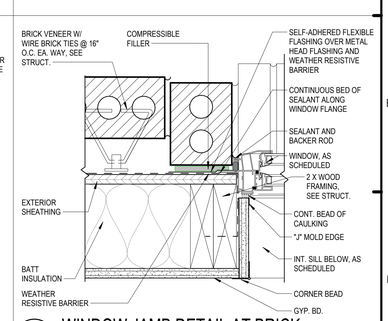

F11 WINDOW JAMB DETAIL AT BRICK
3" = 1'-0"

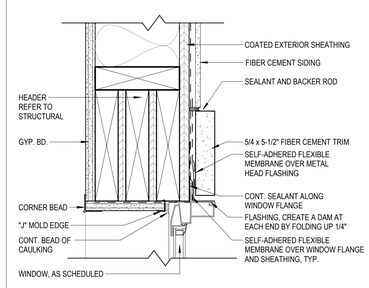

H9 WINDOW HEAD DETAIL AT SIDING
3" = 1'-0"

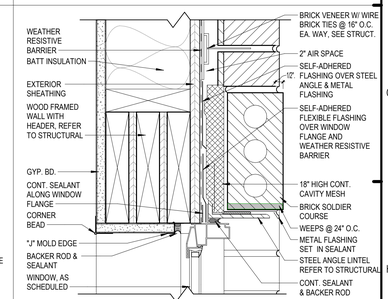

H11 WINDOW HEAD DETAIL AT BRICK TRIM
3" = 1'-0"

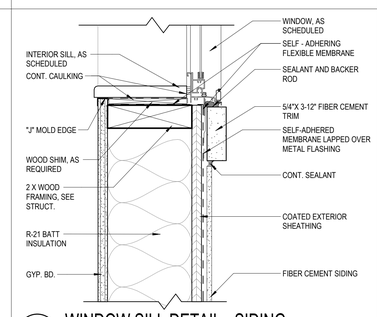

K9 WINDOW SILL DETAIL - SIDING
3" = 1'-0"

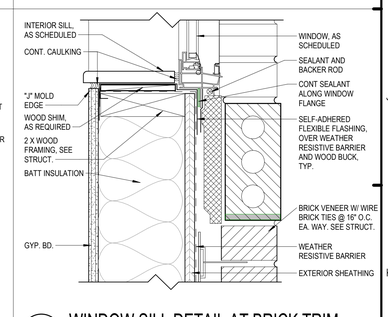

K11 WINDOW SILL DETAIL AT BRICK TRIM
3" = 1'-0"

ISSUE HISTORY

No.	Date	Description
1	04/15/2022	PERMIT SUBMITTAL

REVISION HISTORY

No.	Date	Description

FUGLEBERG KOCH
2555 Temple Trail, Winter Park, FL 32789 (407) 629-0595
www.fuglebergkoch.com AA26002103

CONSULTANT

STATE OF ALABAMA
MICHAEL E. GOVE
8234
4/15/22
REGISTERED ARCHITECT

MICHAEL GOVE
8234

THE ROBERT MADISON
MADISON, ALABAMA

Drawn:	MB
Checked:	JK
Approval:	MG
Date:	04/15/2022
Project #:	5722

WINDOW SCHEDULE AND DETAILS

A7.03

PLOTTED: 5/3/2022 3:38:21 PM

© 2015 These documents and their contents are the property of FUGLEBERG KOCH - AA26002103, and are issued only for the specific project noted on these drawings. Any reproductions, extensions, or modifications of these documents without the expressed written consent of Fugleberg Koch is prohibited by law.

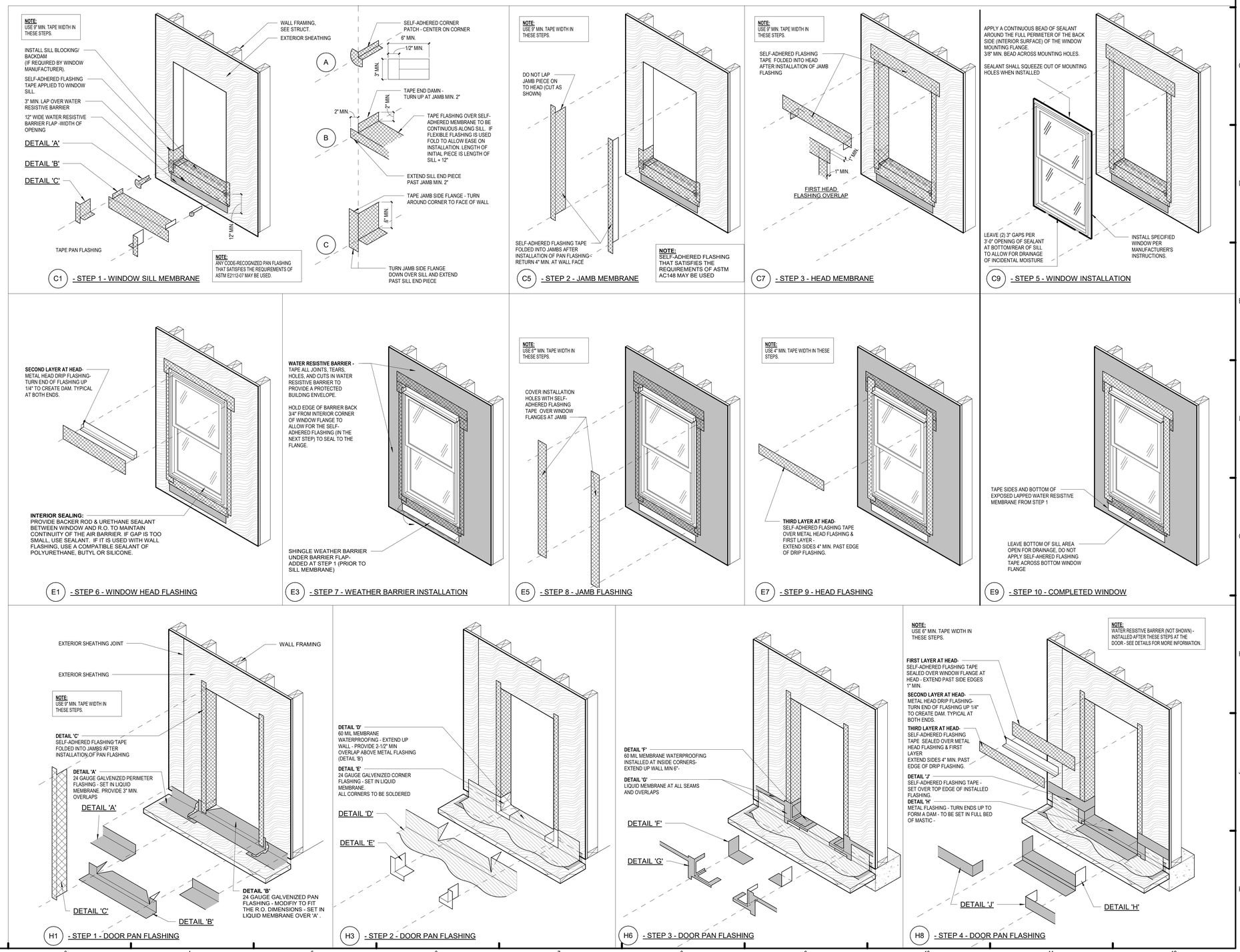

ISSUE HISTORY

No.	Date	Description
1	04/15/2022	PERMIT SUBMITTAL

REVISION HISTORY

No.	Date	Description

FUGLEBERG KOCH

2555 Temple Trail, Winter Park, FL 32789 (407) 629-0595
www. fuglebergkoch.com AA26002103

CONSULTANT

STATE OF ALABAMA
MICHAEL E. GOVE
8234
4/15/22
REGISTERED ARCHITECT

MICHAEL GOVE
8234

Drawn:	MB
Checked:	JK
Approval:	MG
Date:	04/15/2022
Project #:	5722

THE ROBERT MADISON

MADISON, ALABAMA

WINDOW AND DOOR TAPING PROCEDURES

A7.04

PLOTTED: 5/3/2022
3:38:24 PM

© 2015 These documents and concepts are the property of FUGLEBERG KOCH - AA26002103, and are issued only for the specified project.

GENERAL NOTES

1. IT IS THE CONTRACTORS SOLE RESPONSIBILITY TO DETERMINE ERECTION PROCEDURE AND SEQUENCE TO INSURE THE SAFETY OF THE BUILDING AND ITS COMPONENT PARTS DURING ERECTION. THIS INCLUDES, BUT IS NOT LIMITED TO, THE ADDITION OF WHATEVER TEMPORARY BRACING, GUYS OR TIE-DOWNS MAY BE NECESSARY.

CODES AND SPECIFICATIONS

A. GENERAL BUILDING CODE:
   1. INTERNATIONAL BUILDING CODE 2018.

B. CONCRETE:
   1. BUILDING CODE REQUIREMENTS FOR REINFORCED CONCRETE (ACI 318-19)
   2. SPECIFICATIONS FOR STRUCTURAL CONCRETE FOR BUILDINGS (ACI 301-16).

DESIGN LOADS

A. DESIGN LIVE LOADS

ROOF.....20 PSF
ELEVATED FLOORS..... 40 PSF
BALCONY.....100 PSF
CORRIDORS/LANDINGS.....100 PSF
STAIRS.....100 PSF

B. WIND LOADS:
   1) BASIC WIND SPEED (ULTIMATE) = 115 MPH
   2) IMPORTANCE FACTOR = 1.0
   3) WIND EXPOSURE C.
   4) INTERNAL PRESSURE COEFFICIENT ;0.18 FULLY ENCLOSED STRUCTURE
   5) COMPONENTS AND CLADDING: +34.7 PSF AND -45.4 PSF FOR DESIGN WIND PRESSURES.

C. SEISMIC LOADS:
   1) SEISMIC DESIGN CATEGORY.....B
   2) SDS.....0.26
   3) SD1.....0.117
   4) SMS.....0.337
   5) SDS.....0.225

FOUNDATIONS

1. FOUNDATION DESIGN IS BASED ON AN ALLOWABLE SOIL BEARING PRESSURE OF 2000 PSF AS RECOMMENDED IN THE FOUNDATION INVESTIGATION PREPARED BY GEOSERVICES, LLC (PROJECT NO. 21-0759) AUGUST 3, 2021.
2. PLACE FOOTINGS/SLAB ON COMPACTED SOIL. FOLLOW RECOMMENDATIONS OF SOILS REPORT.
3. VERIFY BEARING CAPACITY BY TESTING PRIOR TO SLAB PLACEMENT. SUBMIT REPORTS TO ARCHITECT.

CAST-IN-PLACE CONCRETE

1. CONCRETE SHALL HAVE A MINIMUM COMPRESSIVE STRENGTH OF 3000 PSI AT 28 DAYS, HAVE A SLUMP OF 4" PLUS OR MINUS 1", AND HAVE 2-4% AIR ENTRAINMENT.
2. ALL REINFORCING STEEL SHALL BE NEW DOMESTIC DEFORMED BILLET STEEL CONFORMING TO ASTM A-615 GRADE 60.
3. ALL CONCRETE WORK SHALL BE IN ACCORDANCE WITH "THE BUILDING CODE REQUIREMENTS FOR REINFORCED CONCRETE" ACI 318-19.
4. ALL REINFORCING DETAILS SHALL CONFORM TO "MANUAL OF STANDARD PRACTICE FOR DETAILING REINFORCED CONCRETE STRUCTURES" ACI 315-18.
5. CONTRACTOR SHALL VERIFY LOCATIONS OF ALL OPENINGS, SLEEVES, ANCHOR BOLTS, INSERTS, ETC., AS REQUIRED BY OTHER TRADES BEFORE CONCRETE IS PLACED.
6. CONTRACTOR SHALL PROVIDE SPACERS, CHAIRS, BOLSTERS, ETC., NECESSARY TO SUPPORT REINFORCING STEEL.
7. ALL SLABS SHALL BE POURED MONOLITHICALLY, EXCEPT FOR REQUIRED CONSTRUCTION JOINTS.
8. THE FOLLOWING MINIMUM CONCRETE COVER SHALL BE PROVIDED FOR REINFORCEMENT:
   3"---------CONCRETE CAST AGAINST AND PERMANENTLY EXPOSED TO EARTH.
   1-1/2"-------ALL OTHER CASES.
9. HORIZONTAL SLAB BARS SHALL BE BENT 1'-6" AROUND CORNERS, OR PROVIDE CORNER BARS WITH A 2'-0" LAP ON EACH LEG.
10. TESTING LABORATORY SHALL SUBMIT ONE COPY OF ALL CONCRETE TEST REPORTS DIRECTLY TO THE POST TENSION ENGINEER ARCHITECT-SEE SPECS.

WOOD CONSTRUCTION

1. WOOD CONSTRUCTION SHALL CONFORM TO THE NDS "NATIONAL DESIGN SPECIFICATION FOR WOOD CONSTRUCTION", LATEST EDITION.
2. ALL WALL STUDS SHALL BE NO. 2 SOUTHERN YELLOW PINE FINGER JOINT OR SOLID WITH 9" PRE-CUT STUDS TO BE USED. FOR BEARING WALLS, IS ACCEPTABLE TO USE SYP No. 3 WOOD FOR THE SINGLE BOTTOM PLATE AND THE DOUBLE TOP PLATE. STUDS FOR ALL STUD WALLS SHALL BE AS FOLLOWS:

TWO STORY WALLS	
FIRST FLOOR	2x4'S @ 16"O.C. (U.N.O)
SECOND FLOOR	2x4'S @ 16"O.C. (U.N.O)
THREE STORY WALLS	
FIRST FLOOR	*3x4'S @ 16"O.C. (U.N.O)
SECOND FLOOR	2x4"S @ 16"O.C. (U.N.O)
THIRD FLOOR	2x4"S @ 16"O.C. (U.N.O)

*IT IS ACCEPTABLE TO USE (2) 2x4 STUDS @ 16" O.C. IN LIEU OF 3x4 STUDS @ 16" O.C. NAIL DOUBLE STUDS TOGETHER w/ 10d NAILS @ 8" O.C.

FOUR STORY EXTERIOR WALLS	
FIRST FLOOR	2x6'S @ 16"O.C. (U.N.O)
SECOND FLOOR	2x6'S @ 16"O.C. (U.N.O)
THIRD FLOOR	2x6'S @ 16"O.C. (U.N.O)
FOURTH FLOOR	2x6'S @ 16"O.C. (U.N.O)
FOUR STORY INTERIOR SINGLE WALLS	
FIRST FLOOR	2x6'S @ 16"O.C. (U.N.O)
SECOND FLOOR	2x6'S @ 16"O.C. (U.N.O)
THIRD FLOOR	2x6'S @ 16"O.C. (U.N.O)
FOURTH FLOOR	2x6'S @ 16"O.C. (U.N.O)
FOUR STORY PARTY (TENANT SEPARATION) WALLS	
FIRST FLOOR	(3) 2x4'S @ 16"O.C. W/ 10d NAIL @ 10" O.C. EA. LAYER (U.N.O)
SECOND FLOOR	(2) 2x4'S @ 16"O.C. W/ 10d NAIL @ 10" O.C. (U.N.O)
THIRD FLOOR	2x4'S @ 16"O.C. (U.N.O)
FOURTH FLOOR	2x4'S @ 16"O.C. (U.N.O)

ALL LOAD BEARING WALLS SHALL HAVE MIDSPAN HORIZONTAL BLOCKING SPACED AT 48" O.C. INSTALLED BEFORE WALLS ARE LOADED.
ALL NON-LOAD BEARING PARTITIONS SHALL CONSIST OF 2x4 STUDS SPACED AT 24" O.C. 2x4 STUDS DO NOT NEED TO BE DOUBLED AT THE FIRST FLOOR FOR NON-LOAD BEARING WALLS.

3. PLACE A SINGLE PLATE AT THE BOTTOM AND A DOUBLE PLATE AT THE TOP OF ALL STUD WALLS. 2x SOLE PLATES AT THE EDGES OF SLABS SHALL BE ATTACHED TO THE SLAB WITH SIMPSON MAS MUDSILL ANCHORS (WITH 6 10d NAILS) AT 32" O.C.. AT INTERIOR STUD WALLS PROVIDE EITHER HILTI ZF72 (WITH 2 7/8" LENGTH, 5/64" THICK WASHERS) POWDER DRIVEN FASTENERS AT 8" ON CENTER, OR 1/2" DIAMETER ANCHOR BOLTS WITH 6" EMBEDMENT, AT 32" ON CENTER. RED-HEAD FASTENERS OF EQUIVALENT SIZES MAY BE USED. ALL OTHER SUBSTITUTIONS MUST BE APPROVED BY ASE ENGINEERING SERVICES, INC. PRIOR TO INSTALLATION. SEE THE SHEAR WALL SCHEDULE FOR SPECIAL SOLE PLATE ATTACHMENT.
4. STUDS SHALL BE PACKED AT ALL ANGLES, CORNERS, AROUND ALL OPENINGS AND AT SHEAR WALLS. SEE SCHEDULES, UL ASSEMBLIES AND ARCH. DETAILS FOR REQUIREMENTS.
5. WOOD LINTELS OVER OPENINGS SHALL BE AS NOTED PER DETAILS . NAIL MULTIPLE STUDS TOGETHER WITH NAILS PER DETAIL.
6. WALL SHEATHING SHALL BE: (SEE SHEAR WALL SCHEDULE S1.02 FOR REQUIREMENTS AT SHEAR WALLS.)

   AT INTERIOR WALLS PROVIDE 5/8" GYPSUM WALLBOARD (SEE ARCHITECTURAL DRAWINGS FOR LOCATIONS) EACH SIDE OF STUDS, NAILED WITH 5d COOLER NAILS AT 7" O.C. (USE 6d COOLER NAILS FOR 5/8" WALLBOARD) AT ALL SUPPORTS. PROVIDE SOLID 2x BLOCKING AT ALL SHEET EDGES. BLOCKING IS NOT REQUIRED AT NON-LOAD BEARING PARTITIONS.

   AT EXTERIOR WALLS SHEATH THE INTERIOR FACE OF WALLS WITH 5/8" GYPSUM WALLBOARD AS NOTED ABOVE FOR INTERIOR WALLS. SHEATH THE EXTERIOR FACE OF WALLS WITH 7/16" C-DX PLYWOOD (OR 7/16" O.S.B.), NAILED WITH 8d NAILS AT 6" O.C. AT ALL EDGE SUPPORTS, AND 8d NAILS AT 6" O.C. AT ALL INTERMEDIATE SUPPORTS. PROVIDE SOLID DOUBLE 2x BLOCKING AT ALL SHEET EDGES. SHEARWALL SCHEDULE NOTE 5.
7. ALL WOOD IN CONTACT WITH CONCRETE OR EXPOSED TO WEATHER SHALL BE PRESSURE TREATED.
8. FLOOR SHEATHING IS 3/4" TONGUE AND GROOVE O.S.B., GLUED AND NAILED WITH 10d NAILS AT 6" O.C. AT SUPPORTED EDGES, AND 10d NAILS AT 10" O.C. AT INTERMEDIATE SUPPORTS.
9. ROOF SHEATHING SHALL BE 19/32" C - D PLYWOOD OR 19/32" O.S.B. (SPAN RATING 32/16), NAILED TO TRUSSES BELOW. SEE ROOF SHEATHING NAILING SCHEDULE FOR NAIL PATTERN.
   PROVIDE ONE PLYWOOD CLIP PER SPAN BETWEEN SHEET EDGES FOR 24" SPAN.
   PROVIDE TWO PLYWOOD CLIP PER SPAN BETWEEN SHEET EDGES FOR 48" SPAN.
   PROVIDE SOLID 2x BLOCKING BETWEEN SUPPORTS AT ALL HIPS, RIDGES, VALLEYS, AND CHANGES IN ROOF SLOPE.
10. ALL LUMBER SHALL BE STAMPED WITH THE GRADE MARK OF AN APPROVED GRADING AGENCY.
11. NAILING SCHEDULE:

CONNECTION	COMMON NAIL	NUMBER OR SPACING
SOLE PLATE TO TRUSS OR BLOCKING	16d	8" O.C.
STUD TO SOLE PLATE, TOE NAIL	8d	4
DOUBLE STUDS, FACE NAIL	16d	24" O.C.
DOUBLE TOP PLATES, FACE NAIL	16d	6" O.C.
TOP PLATES LAPS AND INTERSECTIONS	16d	3
TRUSSES, LAPS OVER WALLS, FACE NAIL	16d	4
BUILT-UP CORNER STUDS	16d	12" O.C.
STUDS TO SOLE PLATE, END NAIL	16d	2

12. WHERE WOOD BEAMS/HEADERS ABUT WOOD COLUMNS, PROVIDE SIMPSON "HHUC" CONNECTORS WITH ALL NAILS SPECIFIED BY THE MANUFACTURER.
13. AT ALL WALLS SUPPORTING ROOF TRUSSES PROVIDE UPLIFT STRAPPING/CONNECTORS SHOWN IN THE TYPICAL WALL ELEVATION 1/S5.02. OR ALTERNATE: HURRY-BOLT SYSTEM OR EQUAL. - SUBMIT ENGINEERED SHOP DRAWINGS FOR REVIEW.
14. ALL PRESSURE TREATED AND FIRE RETARDANT LUMBER FASTENERS SHALL BE OF HOT-DIPPED ZINC COATED GALVANIZED STEEL.
15. ALL SIMPSON HOLD DOWN COLLECTORS SHALL USE ALL THREAD ROD WITH DOUBLE BOLTS AT THE BOTTOM W/ A MIN. EMBEDMENT OF 9" AT INTERIOR FOOTING AND 12" AT EXTERIOR FOOTING w/ 2" DIA WASHERS.

PREFABRICATED WOOD TRUSSES

1. ALL PREFABRICATED WOOD TRUSSES SHALL BE SECURELY FASTENED AT EACH END TO THEIR SUPPORTING WALLS OR BEAMS AS SHOWN IN THE TYPICAL WALL ELEVATION 1/S5.02
2. PREFABRICATED WOOD TRUSSES SHALL BE DESIGNED IN ACCORDANCE WITH THE LATEST EDITION OF THE "NATIONAL DESIGN SPECIFICATION FOR STRESS-GRADE LUMBER AND ITS FASTENERS" AS RECOMMENDED BY THE NATIONAL FOREST PRODUCTS ASSOCIATION.
3. TRUSS MEMBERS AND CONNECTIONS SHALL BE DESIGNED (WITH A MAXIMUM ALLOWABLE STRESS INCREASE FOR LOAD DURATION OF 25% FOR ROOF TRUSSES ONLY) TO WITHSTAND THE LIVE LOADS GIVEN IN THE NOTES AND TOTAL DEAD LOAD.
4. TRUSS MANUFACTURER SHALL SUBMIT SHOP DRAWINGS AND DESIGN NOTES WITH A ALABAMA REGISTERED ENGINEER'S SEAL FOR APPROVAL BY THE ARCHITECT. DESIGN NOTES TO INCLUDE THE RATED LOAD CAPACITY OF THE CONNECTORS USED TO SECURE THE MEMBERS, CERTIFICATION OF THE CONNECTOR CAPACITIES AND MANUFACTURER'S LICENSE TO FABRICATE TRUSSES UTILIZING THE CONNECTOR SYSTEM PROPOSED.
5. THE CONTRACTOR SHALL APPROVE FABRICATION AND INSTALLATION DRAWINGS SHOWING SIZE, SHAPE AND LAYOUT PRIOR TO SUBMITTAL FOR REVIEW BY THE ARCHITECT AND BEFORE FABRICATION HAS BEGUN.
6. BRIDGING FOR PRE-ENGINEERED TRUSSES SHALL BE AS REQUIRED BY TRUSS MANUFACTURER, AND THE LOCAL BUILDING CODE, UNLESS NOTED ON PLANS. ALSO WHERE HEEL HEIGHT ON BOTTOM CHORD BEARING TRUSSES EXCEEDS 11" PROVIDE CONTINUOUS 2x4 LET IN.
7. EACH PLY OF EVERY MULTIPLE-PLY GIRDER TRUSS SHALL BE NAILED TOGETHER PER TRUSS MANUFACTURER SPECIFICATIONS.

7. DESIGN LOADS - DEAD LOADS:

FLOOR TRUSSES	BOTTOM CHORD	8 PSF
	TOP CHORD (APTS)	22 PSF
OUTSIDE TRUSSES	BOTTOM CHORD	8 PSF
	TOP CHORD	45 PSF
ROOF TRUSSES	BOTTOM CHORD	10 PSF
	TOP CHORD	10 PSF
	TOP CHORD (AT OVERBUILT AREAS)	5 PSF ADDITIONAL

8. ALL SIMPSON TRUSS ANCHORS SHOWN ON DRAWINGS SHALL BE VERIFIED FOR LOADS SHOWN ON WOOD TRUSS DESIGN CALCULATIONS. THEREFORE, ANCHOR SIZES AND TYPES ARE SUBJECT TO CHANGE BY ADVANCED STRUCTURAL ENGINNERING II.

FASTENER SUBSTITUTIONS:

ALL NAILS ARE COMMON NAILS, UNLESS NOTED OTHERWISE. THE FOLLOWING FASTENERS ARE ACCEPTABLE SUBSTITUTIONS. THE ALTERNATE FASTENERS SHALL BE SPACED AT THE SAME SPACING AS THE SCHEDULED FASTENERS.

SCHEDULED FASTENER	ALTERNATE FASTENER
8d COMMON NAIL	8d RING SHANK NAIL 8d SCREW SHANK NAIL 0.131 P-NAIL
10d COMMON NAIL	10d RING SHANK NAIL 10d SCREW SHANK NAIL 0.148 P-NAIL
16d COMMON NAIL	16d RING SHANK NAIL 16d SCREW SHANK NAIL
6d COOLER NAIL	#6 x 1 1/4" TYPE S OR W DRYWALL SCREW

WATERPROOFING FOR THIS BUILDING IS THE SOLE RESPONSIBILITY OF THE BUILDER/CONTRACTOR/ARCHITECT, HENCE NO DETAILS OF FLASHING, FLOOR, SLOPE AND STEP, NOR ANY OTHER WATERPROOFING MEASURES HAVE BEEN INCLUDED IN OUR DRAWINGS. IF SLOPE AND FLOOR STEPS ARE SHOWN ON OUR DRAWINGS, THEY SHALL BE USED ONLY AS A REFERENCE.

ADDITIONAL NOTES

1. WATERPROOFING DESIGN IS NOT IN THE STRUCTURAL SCOPE OF WORK, HENCE NO DETAILS OF FLASHING, FLOOR, SLOPE AND STEP, NOR ANY OTHER WATERPROOFING MEASURES HAVE BEEN INCLUDED IN OUR DRAWINGS. IF SLOPE AND FLOOR STEPS ARE SHOWN ON OUR DRAWINGS, THEY SHALL BE USED ONLY AS A REFERENCE. FLOOR SLOPE AND STEPS SHALL FOLLOW ARCHITECTURAL DRAWINGS.
2. CONTRACTOR SHALL VERIFY THAT THE TRUSS LAYOUT SUPPLIED BY THE TRUSS MANUFACTURER MATCHES THE TRUSS LAYOUT SHOWN ON THE STRUCTURAL DRAWINGS. IF THERE IS ANY DISCREPANCY BETWEEN TRUSS LAYOUT SHOWN ON TRUSS SHOP DRAWINGS AND TRUSS LAYOUT SHOWN STRUCTURAL DRAWINGS, CONTRACTOR SHALL STOP CONSTRUCTION AND INFORM IN WRITING THE ENGINEER OF RECORD. CONTRACTOR SHALL WAIT FOR ENGINEER OF RECORD RESPONSE IN WRITING PRIOR TO START OF CONSTRUCTION.
3. EACH PLY OF EVERY MULTIPLE-PLY GIRDER TRUSS SHALL BE NAILED TOGETHER PER TRUSS MANUFACTURER SPECIFICATIONS.
4. ALL STUCCO AND/OR VENEER DESIGNS ARE NOT IN THE SCOPE OF WORK FOR THE STRUCTURAL ENGINEER.
5. PAVER AND SIDE WALK DESIGNS ARE NOT IN THE SCOPE OF WORK FOR THE STRUCTURAL ENGINEER.
6. CONTRACTOR SHALL VERIFY AND COORDINATE ALL DIMENSIONS BETWEEN ARCHITECTURAL AND STRUCTURAL DRAWINGS. INFORM ARCH/ENG IF DIMENSIONS DO NOT MATCH. CONTRACTOR SHALL GET A RESPONSE FROM ARCHITECT/ENGINEER IN WRITING TO RESOLVE THE PROBLEMS PRIOR TO STARTING CONSTRUCTION.
7. BUILDING MAINTENANCE SUCH AS PAINTING AND SEALING ETC. IS THE HOME OWNER SOLELY RESPONSIBLE.
8. CONTRACTOR TO PROVIDE CRACK ISOLATION MEMBRANE OVER SLAB AT AREAS TO BE TILED PRIOR TO INSTALLATION OF FLOOR TILE.
9. ALL REBAR SHOWN ON ALL DRAWING DETAILS AND SECTIONS IS CONTINUOUS UNLESS NOTICE OTHERWISE.
10. THE SECTIONS SHOWN ON THE DESIGN DRAWINGS INDICATE THE TYPICAL SECTIONS WHICH ARE APPLIED TO ALL SIMILAR BUILDING CONDITIONS.
11. DEVELOPER OR G.C. SHOULD HIRE DELEGATED ENGINEERS TO SUBMIT SHOP DRAWINGS WITH CALCULATIONS TO ENGINEER OF RECORD FOR REVIEW SUCH AS TRUSSES, STEEL FRAMING AND CONNECTION, METAL STUD FRAMING, STEEL STAIRS, RAILING, POST TENSION MEMBERS, PRECAST STRUCTURES AND ETC.

HEADER/BEAM SCHEDULE

TYPE	HEADER/BEAM	TYPE	HEADER/BEAM
H-1	DOUBLE 2x8 FOR 4" WALL TRIPLE 2x6 FOR 6" WALL	H-5	(2) 1 3/4" x 9 1/2" LVL
H-2	DOUBLE 2x10 FOR 4" WALL TRIPLE 2x8 FOR 6" WALL	H-6	(3) 1 3/4" x 9 1/2" LVL
H-3	DOUBLE 2x12 FOR 4" WALL TRIPLE 2x10 FOR 6" WALL	H-7	(2) P.T. 2x12
H-4	(2) 1 3/4" x 11 7/8" LVL		

1. PROVIDE WOOD HEADERS OVER ALL OPENINGS. IF NO HEADER IS SPECIFIED, PROVIDE H-2 AT EXTERIOR WALLS AND WALLS SUPPORTING TRUSSES, AND H-1 AT OTHER WALLS.
2. AT DOUBLE 2x HEADER/BEAMS PROVIDE A 3/8" PLYWOOD (OR O.S.B.) SPACER BETWEEN MEMBERS.
3. NAIL ALL MULTI-MEMBER HEADERS AND BEAMS TOGETHER WITH 16d NAILS AT 12" O.C. TOP AND BOTTOM, EACH SIDE, STAGGERED.
4. PROVIDE DOUBLE WOOD STUD UNDER WOOD HEADER EA END U.N.O.

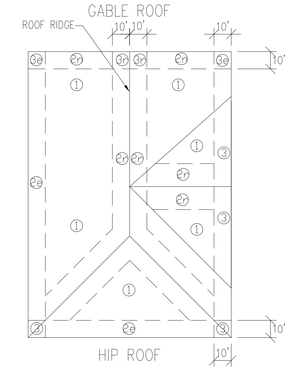

ROOF ZONES

ROOF SHEATHING FASTENING SCHEDULE (8d RING SHANK NAILS TYP THROUGHOUT)	
PANEL EDGES	PANEL FIELDS
4" O.C.	4" O.C.
4" O.C.	4" O.C.

8d RING SHANK NAILS SIZE = 2-1/2" X 0.131"

WINDOW & DOOR WINDOW PRESSURES 115 MPH WIND ZONE EXPOSURE C BUILDING CATAGORY II		
OPENING SIZE	INTERIOR ZONE	EXTERIOR ZONE**
10 SQFT	+36.4 / -39.5	+36.4 / -48.8
20 SQFT	+34.7 / -37.8	+34.7 / -45.4
50 SQFT	+32.6 / -35.5	+32.6 / -41.2
100 SQFT	+30.9 / -34.0	+30.9 / -37.8
**END ZONE IS DEFINED AS AN AREA WITHIN 10' FROM THE EDGE OF THE BUILDING		

STANDARD WINDOWS AND DOORS WILL GENERALLY FALL INTO THE 10 TO 20 SQ. FT. CATEGORY.
STANDARD DOUBLE SLIDING GLASS DOOES WILL GENERALLY FALL INTO THE 20 TO 50 SQ. FT. CATEGORY.
STANDARD DOUBLE GARAGE DOORS WILL GENERALLY FALL INTO THE 50 TO 100 SQ. FT. CATEGORY

FASTENER SCHEDULES:

ALL NAILS ARE RING SHANK NAILS, UNLESS NOTED OTHERWISE.

SCHEDULED FASTENER

8d RINK SHANK NAIL (0.131 x 2 1/2")	12d RINK SHANK NAIL (0.148 x 3 1/4")
10d RING SHANK NAIL (0.148 x 3")	16d RING SHANK NAIL (0.162 x 3 1/2")

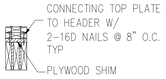

H-1 SECTION

SCALE: N.T.S.

H-2 SECTION

SCALE: N.T.S.

U.S. DEPARTMENT OF HOUSING AND URBAN DEVELOPMENT

ISSUE HISTORY

No.	Date	Description
1	04/15/22	PERMIT SUBMISSION

REVISION HISTORY

No.	Date	Description

© 2018 These documents and these concepts are the property of FUGLEBERG KOCH - AA26002103, and are loaned only for the specific project noted on these drawings. Any reproductions, revisions, or modifications of these documents without the expressed written consent of Fugleberg Koch is prohibited by law.

FUGLEBERG KOCH
2555 Temple Trail, Winter Park, FL 32789 (407) 629-0595
www. fuglebergkoch.com AA26002103
CONSULTANT

ASE ENGINEERING SERVICES, INC.
STRUCTURAL DESIGN GROUP
TO THE BEST OF MY KNOWLEDGE THE BUILDING DESIGN PLANS AND SPECIFICATIONS COMPLY WITH BUILDING STRUCTURAL CODES IN EFFECT AT THE TIME OF ISSUING OF THE PLANS AND SPECIFICATIONS ARE ONLY FOR THE BUILDING'S STRUCTURAL COMPONENTS AFFECTED BY WIND, LIVE AND GRAVITY LOADS.
10244 East Colonial Drive, Suite 202
Orlando, Florida 32817 - 407-677-5565 Fax 407-730-2999
Certificate of Authorization No. 25873
Wenyi Hu P.E.
Alabama No. 28652

ALABAMA LICENSED No. 28652 PROFESSIONAL ENGINEER
4/26/2022

THE ROBERT MADISON
MADISON, ALABAMA

Drawn:	CW
Checked:	CW
Approval:	MX
Date:	02-20-22
Project #:	XXX-XXX

GENERAL NOTES BLDG TYPES A, B & C

S0.01

PLOTTED:

CONNECTOR EQUIVALENT SCHEDULE

SIMPSON

SIMPSON TYP	FASTENERS	UPLIFT(lbs.)	WOOD TO:	USP TYP
MTS16 OR MTS12	(14) 10d x 1-1/2	1000	WOOD	MTW16
HTS20	(24) 10d x 1-1/2	1450	WOOD	HTW20
LTS12	(12) 10d x 1-1/2	775	WOOD	LTW12
H3	(4) 8d	455	WOOD	RT7
LTT20B	(10) 16d INTO STUDS	1750 (NAILS)	CONCRETE, WOOD	LTS20B
HTT16	(18) 16d	4175 (NAILS)	CONCRETE, WOOD	HTT16
SP-1 SP-4	(10) 10d (6) 10d x 1-1/2	585 735	WOOD (BOTT OF STUD) WOOD (TOP OF STUD)	SPT22 SPT4
THA/THAC TYP	PER SIMPSON CATALOG	PER SIMPSON CATALOG	SELECTION BASE ON TRUSS WIDTH AND HEIGHT	MSH TYP
CS16	(22) 10d	1650	11" MIN AT EA END FOR WOOD	RS150
MAS	(6) 10d x 1-1/2	1005	SLAB, STEMWALL	FA3
HCP2 HCP4	(12) 10d x 1-1/2 (16) 10d	605 1000	FOR 2x MEMBER FOR 4x MEMBER	N/A N/A
A35	(12) 8d x1 1/2	450 SHEAR	WOOD	MPA1
CC44, ECCU44 CC66, ECCU66	(4) 5/8d BOLTS (6) 5/8d BOLTS	1465 (UPLIFT) 3660 (UPLIFT)	ECCU44 AT BEAM END ECCU66 AT BEAM END	KCC44, KECCU44 KCC66, KECCU66
PC/EPC TYP	PER SIMPSON CATALOG	PER SIMPSON CATALOG	SELECTION BASE ON POST AND BEAM WIDTH	PCM/EPCM TYP
ECCLL44 ECCLL66	BOLTS AS REQ	1465 (UPLIFT) 3660 (UPLIFT)	ECCLLU44 FOR 4x4 POST ECCLLU66 FOR 6x6 POST	KECCLL44 KECCLL66
ABU44 ABU66	(12) 16d 5/8 ANCHOR BOLT	2200	ABU44 FOR 4x4 POST ABU44 FOR 4x4 POST	PAU44 PAU66
HUC410	(18) 16d FOR WOOD	1510	CONCRETE, MASONRY, WOOD FOR 4x10 BM	HD410IF
HUC412	(22) 16d FOR WOOD	1510	CONCRETE, MASONRY, WOOD FOR 4x12 BM	HD412IF
LUS TYP	PER SIMPSON CATALOG	PER SIMPSON CATALOG	LUS24 FOR 2x6, LUS26 FOR 2x8, LUS28 FOR 2x10, ETC.	JUS TYP

*SUBJECT TO COORDINATION WITH TRUSS ENGINEERING CRITERIA

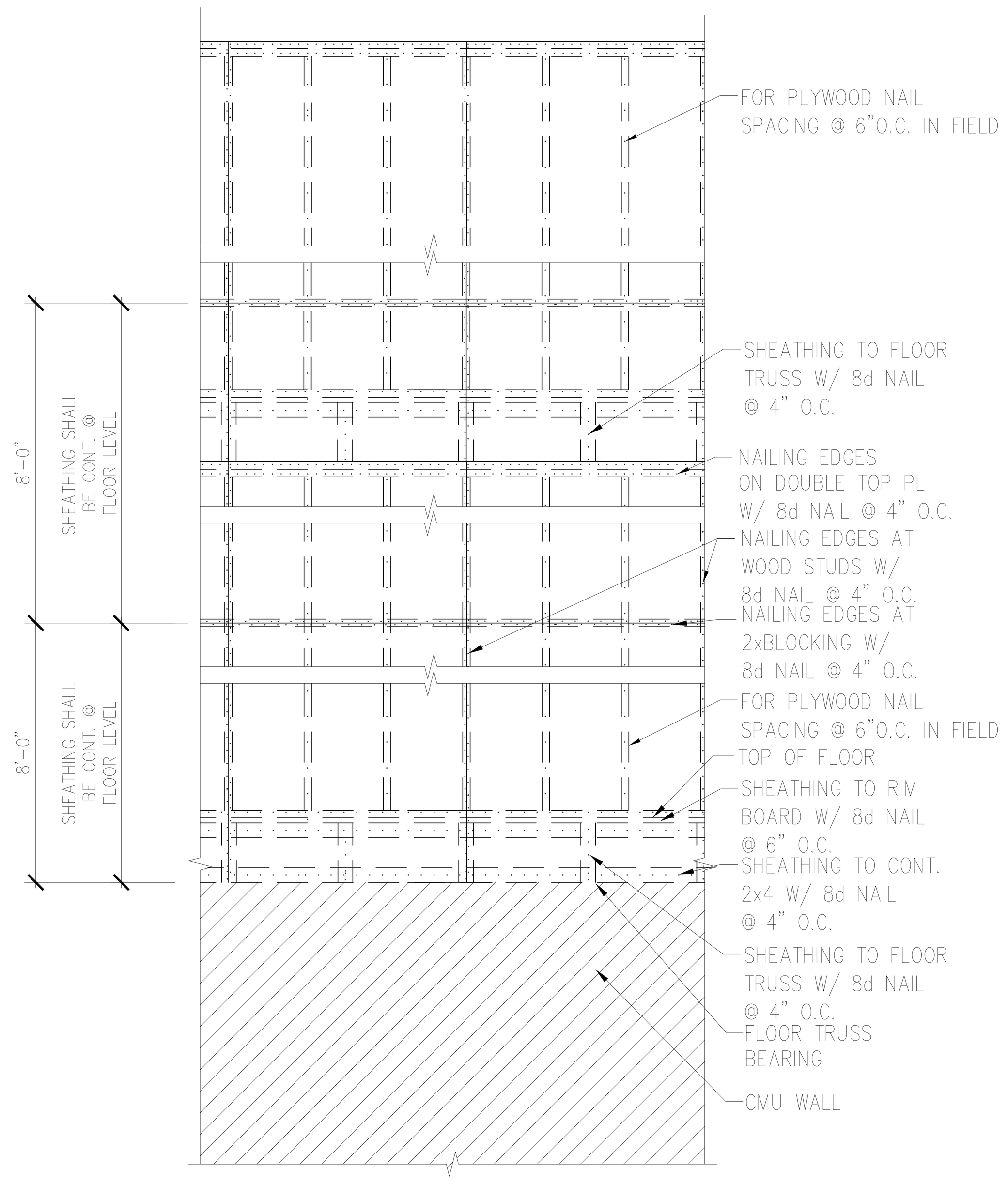

1 TYP EXTERIOR WALL SHEATHING LAY-OUT

SCALE: 3/4" = 1'-0"

TRUSS NOTES

1. TRUSSES SHOWN FOR GENERAL CONFIGURATION ONLY, WEB MEMBERS ARE NOT SHOWN, BUT SHALL BE DESIGNED BY THE TRUSS MANUFACTURER IN ACCORDANCE WITH THE GENERAL NOTES. WORKING POINTS SHALL BE DETERMINED BY THE TRUSS MANUFACTURER.
2. TRUSS MANUFACTURER IS RESPONSIBLE FOR THE DESIGN OF ANY BRIDGING OR BRACING REQUIRED TO BRACE THE TRUSS BOTTOM CHORDS FOR WIND UPLIFT.
3. SEE THE ARCHITECTURAL DRAWINGS FOR ELEVATIONS, OVERHANGS AND BEARING CONDITIONS.
4. THE CONNECTION OF TRUSS TO TRUSS SHALL BE PROVIDED BY THE TRUSS MANUFACTUROR.
5. VERIFY TRUSS SLOPE WITH ARCH DRWG PRIOR TO CONSTRUCTION.

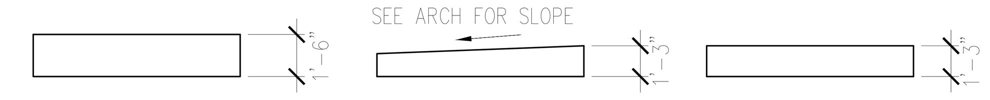

FT-1/FGT-1 FT-2/FGT-2 FT-3/FGT-3

FLOOR TRUSS TYPES

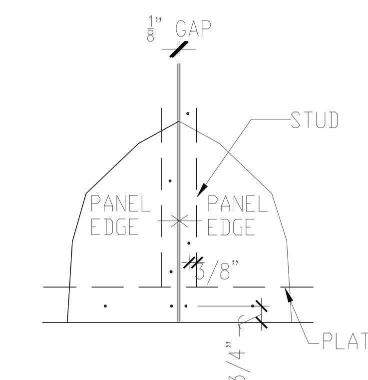

1. ALL HORIZONTAL & VERTICAL JOINTS SHALL OCCUR OVER FRAMING & SHALL BE ATTACHED IN THE SPACING SHOWN ON GENERAL NOTES. SOLID 2X BLOCKING OR FRAMING MEMBER SHALL BE AT ALL PANEL EDGES.

2 SHEATHING JOINT DETAIL

SCALE: N.T.S.

SHEARWALL SCHEDULE FOR 4 STORY BLDGS

TYPE	SHEATHING FND-2nd FLR	SHEATHING 2nd-ROOF @ 2 STORY	SHEATHING 3rd-ROOF @ 3 STORY	SHEATHING 4th-ROOF @ 4 STORY	SHEATHING NAILING FND-2nd FLR	SHEATHING NAILING 2nd-ROOF @ 2 STORY	SHEATHING NAILING 3rd-ROOF @ 3 STORY	SHEATHING NAILING 4th-ROOF @ 4 STORY	FND CONN EACH END OF WALL CONNECTOR	FND BOLT-8" EMBED DBL NUT EA END	ATTACH TO STUDS	REQ'D STUDS AT END OF WALL	FND SOLE PLATE ATTACHMENT	2ND FLOOR SHEAR BLKG	2nd FLOOR CONN EACH END OF WALL CONNECTOR	NAILS EACH END OF STRAP AT STUD	BOLTS TO STUDS	REQ'D STUDS AT END OF WALL	3rd FLOOR SHEAR BLKG	3rd FLOOR CONN EACH END OF WALL CONNECTOR	NAILS EACH END OF STRAP AT STUD	BOLTS TO STUDS	REQ'D STUDS AT END OF WALL	4th FLOOR SHEAR BLKG	4TH FLOOR CONN EACH END OF WALL CONNECTOR	NAILS EACH END OF STRAP AT STUD	BOLTS TO STUDS	REQ'D STUDS AT END OF WALL
1	7/16" C-D PLYWD *2	7/16" C-D PLYWD *2	7/16" C-D PLYWD *2	7/16" C-D PLYWD *2	8d NAILS @ 4" O.C.	8d NAILS @ 4" O.C.	8d NAILS @ 6" O.C.	8d NAILS @ 6" O.C.	HD7B	7/8" DIA	3-3/4" DIA BOLTS	(5) 2x4	1/2" DIAx 7" EMB. A. BOLTS @ 24" O.C. *4	N/A	(3) CS20x40	18-10d	N/A	(4) 2x4	N/A	(2) CS20x40	18-10d	N/A	(3) 2x4	N/A	CS20x40	18-10d	N/A	(2) 2x4
2	5/8" GYPSUM WALLBOARD *2	5/8" GYPSUM WALLBOARD *2	5/8" GYPSUM WALLBOARD *2	5/8" GYPSUM WALLBOARD *2	6d COOLER NAILS @ 4" O.C.	6d COOLER NAILS @ 4" O.C.	6d COOLER NAILS @ 6" O.C.	6d COOLER NAILS @ 6" O.C.	HD5B	5/8" DIA	2-3/4" DIA BOLTS	(5) 2x4	1/2" DIAx 7" EMB. A. BOLTS @ 24" O.C. *4	N/A	(3) CS20x40	18-10d	N/A	(4) 2x4	N/A	(2) CS20x40	18-10d	N/A	(3) 2x4	N/A	CS20x40	18-10d	N/A	(2) 2x4
3	7/16" C-D PLYWD *3	7/16" C-D PLYWD *3	7/16" C-D PLYWD *3	7/16" C-D PLYWD *3	8d NAILS @ 4" O.C.	8d NAILS @ 4" O.C.	8d NAILS @ 6" O.C.	8d NAILS @ 6" O.C.	HD9B	7/8" DIA	3-7/8" DIA BOLTS	(5) 2x6	1/2" DIAx 7" EMB. A. BOLTS @ 24" O.C. *4	N/A	(3) CS20x40	18-10d	N/A	(4) 2x6	N/A	(2) CS20x40	18-10d	N/A	(3) 2x6	N/A	CS20x40	18-10d	N/A	(2) 2x6

*1 SHEATH BOTH FACES OF WOOD BEARING WALL. PROVIDE SOLID BLOCKING AT ALL SHEET EDGES, AND AT 4'-0" O.C. MAXIMUM BETWEEN STUDS. 7/16" O.S.B SUBSTITUTION IS ACCEPTABLE IN LIEU OF C-D PLYWOOD.

*2 THIS IS AN INTERIOR PARTY WALL, WITH SHEATHING ON ONE FACE ONLY. PROVIDE THE SHEARWALL SHEATHING SCHEDULED APPLIED DIRECTLY TO THE STUDS WITH THE SCHEDULED NAILING PATTERN.

*3 SHEATH EXTERIOR FACE WITH SHEARWALL SCHEDULED, AND THE INTERIOR FACE OF STUDS AS SPECIFIED IN THE GENERAL NOTES FOR INTERIOR WALLS. 7/16" O.S.B SUBSTITUTION IS ACCEPTABLE IN LIEU OF C-D PLYWOOD.

*4 ALL ANCHOR BOLTS SHALL HAVE 2" DIA WASHERS.

NOTES:

1 ALL HD, MAS, AND CS FASTENERS ARE AS MANUFACTURED BY THE SIMPSON STRONG-TIE COMPANY, INC., OR EQUAL.

2 WHERE SCHEDULED ADDITIONAL STUDS AT THE ENDS OF SHEAR WALLS ARE INTERRUPTED AT TRUSS BEARING, PROVIDE SOLID BLOCKING IN THE TRUSS SPACE TO MATCH THE STUDS SCHEDULED FOR THE LOWER FLOOR.

3 WHERE SCHEDULED SHEATHING CANNOT EXTEND FULL HEIGHT OF WALL, PROVIDE SHEATHING OR BLOCKING BETWEEN FLOOR TRUSSES AT ALL SHEARWALLS.

4 SHEATHING SHALL EXTEND FULL HEIGHT OF SHEARWALLS. STAGGER SHEATHING HORIZONTAL JOINTS SO THEY DO NOT FALL AT HORIZONTAL JOINT BETWEEN DOUBLE TOP PLATES.

5 WHEREVER THE SHEATHING OF A SHEAR WALL IS INTERRUPTED (I.E. BY AN INTERSECTING WALL) IN THE VERTICAL PLANE, THE SCHEDULED "ADD'L STUD AT END OF WALL" AND HOLDDOWN ANCHORS SHALL BE PROVIDED AT THE END OF THE SHEATHING (ONE EACH SIDE OF THE INTERRUPTION). THE QUANTITY OF SHEARWALL CALLOUTS ON THE PLANS MAY NOT ACCURATELY REFLECT THE NUMBER OF HOLDDOWNS REQUIRED BECAUSE OF THIS. THE CONTRACTOR MUST FIRST DETERMINE WHERE THE SHEARWALL SHEATHING WILL BE INTERRUPTED BEFORE DETERMINING THE NUMBER HOLDDOWNS REQUIRED.

6 WHERE BOLTS ARE CALLED OUT FOR HOLDDOWN ANCHORS, THE BOLTS SHALL BE THROUGH BOLTS CONFORMING TO ASTM A307.

7 7/16" O.S.B. MAY BE USED IN LIEU OF THE 7/16" C-DX PLYWOOD SHEATHING EXCEPT FOR ROOF TRUSS SHEATHING.

8 ANCHOR BOLTS SHALL ALL HAVE 3" HOOKS. A36 ALL THREAD RODS, DRILLED AND EPOXY SET INTO FOOTINGS, MAY BE SUBSTITUTED FOR ANCHOR BOLTS CAST IN PLACE. ALL THREAD RODS SHALL HAVE SAME EMBEDMENT DEPTH AS ANCHOR BOLTS.

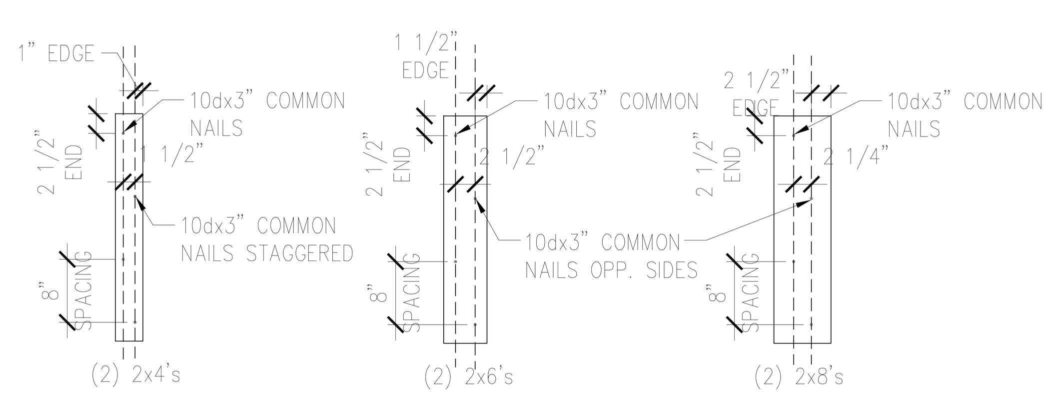

FOR STUD PACKS w/ MORE THAN (2) STUDS, USE NAILING PATTERN FOR EACH LAYER.

3 2x BUILT-UP STUD COLUMN DETAILS

SCALE: N.T.S.

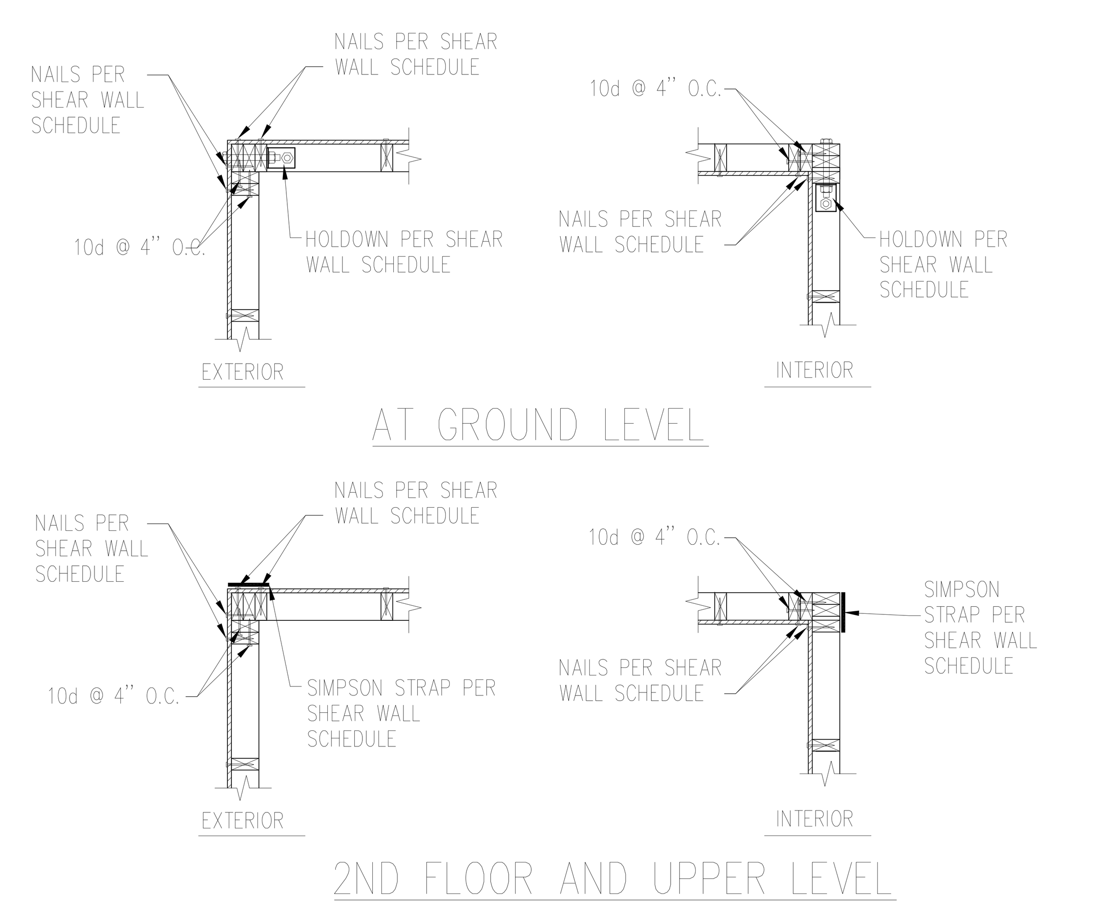

4 TYP. SHEARWALL CORNER HOLDOWN

SCALE: NTS

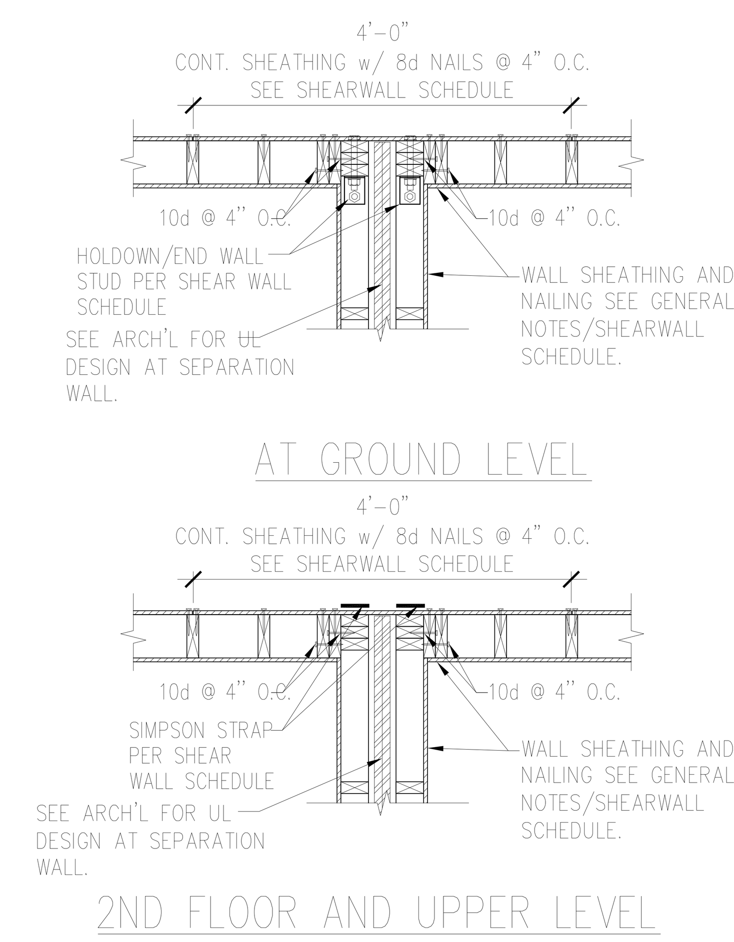

5 TYPICAL SHEATHING AT TENANT SEPARATION WALL

SCALE: N.T.S.

ISSUE HISTORY

No.	Date	Description
1	04/15/22	PERMIT SUBMISSION

REVISION HISTORY

No.	Date	Description

FUGLEBERG KOCH

2555 Temple Trail, Winter Park, FL 32789 (407) 629-0595
www. fuglebergkoch.com AA26002103

CONSULTANT

ASE ENGINEERING SERVICES, INC.
STRUCTURAL DESIGN GROUP
TO THE BEST OF MY KNOWLEDGE, THE BUILDING DESIGN PLANS AND SPECIFICATIONS COMPLY WITH BUILDING STRUCTURAL DESIGN CODE. THE SIGNING AND SEALING OF THE PLANS AND SPECIFICATIONS ARE ONLY FOR THE BUILDING'S STRUCTURAL COMPONENTS AFFECTED BY WIND, LIVE AND GRAVITY LOADS.
10244 East Colonial Drive, Suite 202
Orlando, Florida 32817 – 407-677-5565 Fax 407-730-2999
Certificate of Authorization No. 25873

Wenyi Hu P.E.
Alabama No. 26652

ALABAMA LICENSED No. 26652 PROFESSIONAL ENGINEER 4/26/2022

THE ROBERT MADISON

MADISON, ALABAMA

Drawn:	CW
Checked:	CW
Approval:	MX
Date:	02-20-22
Project #:	XXX-XXX

GENERAL NOTES BLDG TYPES A, B & C

S0.02

PLOTTED:

© 2018 These documents and their contents are the property of FUGLEBERG KOCH - AA26002103, and are issued only for the specific project noted on these drawings. Any reproductions, revisions, or modifications of these documents without the expressed written consent of Fugleberg Koch is prohibited by law.

PLAN NOTES:

1. SEE GENERAL NOTES ON SHEETS S0.01 & S0.02.
2. DO NOT SCALE DRAWINGS. SEE ARCH'L. DRAWINGS FOR ADDITIONAL DIMENSIONS NOT SHOWN, VERIFY ALL DIMENSIONS WITH ARCH'L. DRAWINGS PRIOR TO START OF CONSTRUCTION. IF DISCREPANCIES SHOULD OCCUR – CONTACT THE ARCHITECT IN WRITING FOR CLARIFICATION BEFORE PROCEEDING.
3. 4" (TOTAL) CONCRETE SLAB REINFORCED WITH 6x6-W1.4xW1.4 W.W.F. OVER 10 MIL VAPOR BARRIER ON COMPACTED SUBGRADE. COORDINATE ALL SLAB SLOPES, DEPRESSIONS AND LIMITS THERE OF WITH ARCH'L. DRAWINGS (FOR ACTUAL TOP OF SLAB ELEVATIONS, SEE ARCH'L. AND / OR CIVIL DRAWINGS)
4. PRIOR TO CONCRETE PLACEMENT PROVIDE TERMITE SOIL TREATMENT WITH TEN YEAR WARRANTY AND FOUR ANNUAL INSPECTIONS AND RENEWALS. SEE ARCHITECTURAL FOR REQUIREMENT.
5. ◯ INDICATES WOOD STUD SHEAR WALL TYPE, AND SHADING INDICATES EXTENT OF SHEAR WALL. SEE THE SHEAR WALL SCHEDULE ON SHEET S0.02 FOR SHEAR WALL INFORMATION.
6. THE MAX. SPACING OF CONTROL JOINT FOR ENCLOSURE SPACE SHALL BE 20'-0" O.C., AND FOR OPEN SPACE SHALL BE 8'-0" O.C. COORD. W/ FLOOR COVERING PLACEMENT. SEND SUBMITTAL TO ARCHITECT FOR REVIEW.
7. SEE ARCH'L. DRAWINGS FOR LOCATIONS / LIMITS AND CONSTRUCTION INFORMATION OF INTERIOR NON-BEARING PARTITION WALLS NOT SHOWN ON PLAN. SEE GENERAL NOTES.
8. COORDINATE ALL SLAB (TOPPING) SLOPES AND DEPRESSIONS WITH ARCH'L. DRAWINGS. (FOR ACTUAL TOP OF SLAB ELEVATIONS, SEE ARCH'L. DRAWINGS)
9. SEE MECHANICAL DRAWINGS FOR LOCATION (ON PLANK) OF MECHANICAL UNITS. H.C. MANUFACTURER / SUPPLIER TO DESIGN FOR UNIT WEIGHT. AS REQUIRED VERIFY WEIGHTS WITH MECHANICAL DRAWINGS.
10. INDICATES MASONRY BEARING WALLS REINFORCED WITH (1)-#5 VERTICAL GROUT FILLED CELLS SOLID AT ALL CORNERS, ADJACENT MASONRY OPENINGS AND 24" O.C. (MAX) .
11. SEE 16&17/S5.02 FOR THE 2x BLOCKING BETWEEN BEARING WALL FLOOR LEVEL.

FOOTING SCHEDULE

MARK	SIZE WIDTH x LENGTH x DEPTH	REINFORCEMENT BOTTOM	NOTES
WF-1.0	1'-0"xCONT.x2'-2"	(2)-#5's CONT.	
WF-1.5A	1'-6"xCONT.x2'-0"	(2)-#5's CONT. #4's @ 48" O.C. TRANSVERSE	
WF-1.5	1'-6"xCONT.x2'-2"	(2)-#5's CONT. #4's @ 48" O.C. TRANSVERSE	
WF-2.0	2'-0"xCONT.x2'-2"	(2)-#5's CONT. #4's @ 48" O.C. TRANSVERSE	TYP. EXTERIOR WOOD WALL FOOTING
WF-2.0A	2'-0"xCONT.x1'-0"	(3)-#5's CONT. #4's @ 48" O.C. TRANSVERSE	TYP. INTERIOR WOOD WALL FOOTING
WF-3.0	3'-0"xCONT.x2'-2"	(3)-#5's CONT. #4's @ 48" O.C. TRANSVERSE	TYP. EXTERIOR CMU WALL FOOTING
WF-3.0A	3'-0"xCONT.x1'-0"	(3)-#5's CONT. #4's @ 48" O.C. TRANSVERSE	TYP. INTERIOR CMU WALL FOOTING
F-2.5A	2'-6"x2'-6"x1'-0"	(3)-#5's EA WAY	
F-2.5	2'-6"x2'-6"x2'-2"	(3)-#5's EA WAY	

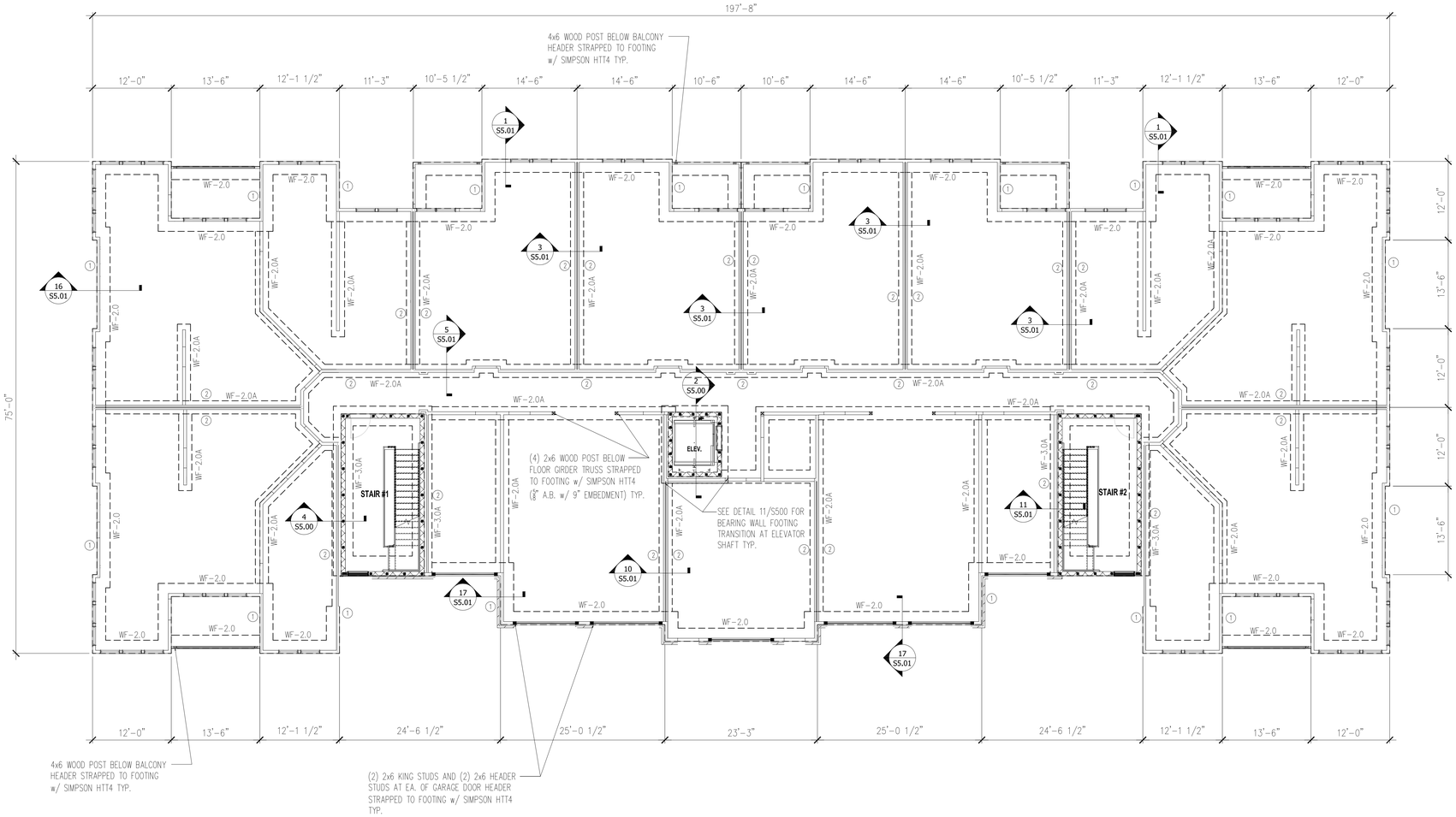

1 FOUNDATION PLAN
SCALE: 1/8" = 1'-0"

U.S. DEPARTMENT OF HOUSING AND URBAN DEVELOPMENT

ISSUE HISTORY

No.	Date	Description
1	04/15/22	PERMIT SUBMISSION

REVISION HISTORY

No.	Date	Description

FUGLEBERG KOCH
2555 Temple Trail, Winter Park, FL 32789 (407) 629-0595
www. fuglebergkoch.com AA26002103

CONSULTANT

ASE ENGINEERING SERVICES, INC.
STRUCTURAL DESIGN GROUP
TO THE BEST OF MY KNOWLEDGE, THE BUILDING DESIGN PLANS AND SPECIFICATIONS COMPLY WITH BUILDING STRUCTURAL DESIGN CODE. THE SIGNING AND SEALING OF THE PLANS AND SPECIFICATIONS ARE ONLY FOR THE BUILDING'S STRUCTURAL COMPONENTS AFFECTED BY WIND, LIVE AND DEAD LOADS.
10244 East Colonial Drive, Suite 202
Orlando, Florida 32817 – 407-677-5565 Fax 407-730-2999
Certificate of Authorization No. 25873
Wenyi Hu P.E.
Alabama No. 26652

ALABAMA LICENSED No. 26652 PROFESSIONAL ENGINEER
04/28/2022

THE ROBERT MADISON	Drawn:	CW
	Checked:	CW
MADISON, ALABAMA	Approval:	MX
	Date:	02-20-22
	Project #:	XXX-XXX

BUILDING TYPE B FOUNDATION PLAN

S2.01

PLOTTED:

© 2018 These documents and their contents are the property of FUGLEBERG KOCH - AA26002103, and are licensed only for the specific project noted on these drawings. Any reproductions, revisions, or modifications of these documents without the expressed written consent of Fugleberg Koch is prohibited by law.

PLAN NOTES:

1. SEE GENERAL NOTES ON SHEET S0.01 & S0.02.
2. DO NOT SCALE DRAWINGS. SEE ARCH'L. DRAWINGS FOR ADDITIONAL DIMENSIONS NOT SHOWN, VERIFY ALL DIMENSIONS WITH ARCH'L. DRAWINGS PRIOR TO START OF CONSTRUCTION. IF DISCREPANCIES SHOULD OCCUR – CONTACT THE ARCHITECT IN WRITING FOR CLARIFICATION BEFORE PROCEEDING.
3. ◯ INDICATES WOOD STUD SHEAR WALL TYPE, AND SHADING INDICATES EXTENT OF SHEAR WALL. SEE THE SHEAR WALL SCHEDULE ON SHEET S0.02 FOR SHEAR WALL INFORMATION.
4. SEE ARCH'L. DRAWINGS FOR LOCATIONS/LIMITS AND CONSTRUCTION INFORMATION OF INTERIOR NON-BEARING PARTITION WALLS NOT SHOWN ON PLAN. SEE GENERAL NOTES (SHEET S0.01) FOR ADDITIONAL WALL FRAMING INFORMATION.
5. PROVIDE WOOD HEADER OVER ALL OPENINGS IN WOOD WALLS (COORD. EXACT SIZE, LOCATION AND ELEVATIONS WITH ARCH'L. DRAWINGS) IF NO HEADER TYPE HAS BEEN CALL-OUT ON PLAN, PROVIDE WOOD HEADER BASED ON HEADER SCHEDULE SHOWN ON S0.01 SHEET. SEE DETAIL 1/S5.04 FOR CONT. HEADER OVER NON-MULLED WINDOWS AND STRAPPING.
6. PRE-ENGINEERED 18" DEEP WOOD TRUSSES AT 24" O.C. (MAX) U.N.O., 15" DEEP WOOD TRUSSES AT 24" O.C. (MAX) U.N.O AT BALCONY/BREEZEWAY WITH 3/4" P.T. C-D PLYWOOD SHEATHING.
7. COORDINATE LOCATION OF FLOOR TRUSSES W/ MECH. DWGS FOR LOCATION OF EXHAUST FAN, AIR HANDLING, AND DUCTS.
8. F.G.T. INDICATES FLOOR GIRDER TRUSS.
9. THE REQUIRED NUMBER OF FASTENERS FOR CONNECTORS SUCH AS NAILS TO WOOD MEMBERS, SEE SIMPSON CATALOG.
10. SEE THE GENERAL NOTES FOR FLOOR SHEATHING INFORMATION, AND FOR WOOD TRUSS TYPES.
11. PROVIDE DOUBLE WOOD STUDS UNDER WOOD HEADER, WOOD BEAM, F.G.T., G.T. CONTINUOUS TO THE FTG. U.N.O. (PROVIDE (2) 2X4 WOOD BLOCKING BETWEEN TRUSS TOP AND BOTTOM CORDS BELOW)
12. AT DOORWAYS FOR INTERIOR BEARING WALLS, ADD A (2) 2x BLOCKING BETWEEN FLOOR LEVELS.
13. SEE ARCH DRAWINGS FOR SPECS ON LIGHTWEIGHT CONCRETE OVER WOOD JOIST TYP.
14. INDICATES MASONRY BEARING WALLS REINFORCED WITH (1)-#5 VERTICAL GROUT FILLED CELLS SOLID AT ALL CORNERS, ADJACENT MASONRY OPENINGS AND 24" O.C. (MAX) .
15. PROVIDE DOUBLE KNOCK OUT BLOCK BOND BEAM AT EA FLOOR LEVEL WITH #5 BARS AT EA COURSE.
16. PROVIDE PRECAST "U" LINTELS OVER ALL OPENINGS IN MASONRY WALL (COORD. EXACT SIZE, LOCATIONS AND ELEVATIONS WITH ARCH'L. DRAWINGS). IF NO LINTEL TYPE HAS BEEN CALL-OUT ON PLAN, PROVIDE MASONRY LINTEL TYPE: 8F16-1B/1T, AND 8F14-1B/1T FOR DOOR SEE "LINTEL SCHEDULE" (ON SHEET S5.00) FOR LINTEL TYPE SIZES AND REINFORCING. PROVIDE TEMPORARY SHORING DURING CONSTRUCTION IF LINTEL SPAN IS GREATER THAN 6 (SIX) FEET.
17. SEE ARCH PLANS FOR OUTSIDE CORNER PANEL SHADOW BOX LOCATIONS AND DETAIL 12/S5.03 FOR CONNECTION/FRAMING SPECS.

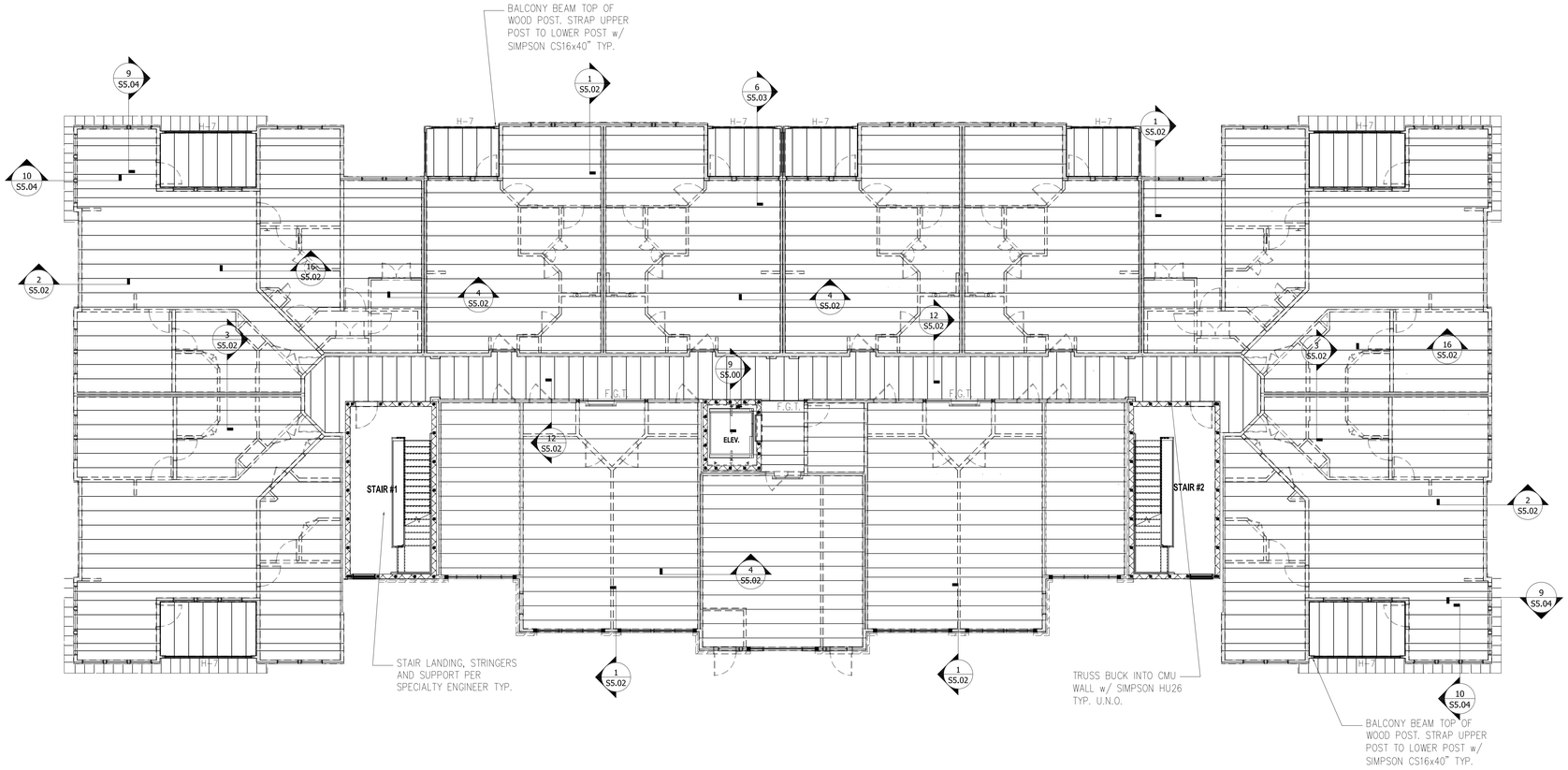

1 2ND FLOOR PLAN
SCALE: 1/8" = 1'-0"

U.S. DEPARTMENT OF HOUSING AND URBAN DEVELOPMENT

ISSUE HISTORY

No.	Date	Description
1	04/15/22	PERMIT SUBMISSION

REVISION HISTORY

No.	Date	Description

FUGLEBERG KOCH
2555 Temple Trail, Winter Park, FL 32789 (407) 629-0595
www. fugleberg koch.com AA26002103

CONSULTANT

ASE ENGINEERING SERVICES, INC.
STRUCTURAL DESIGN GROUP
TO THE BEST OF MY KNOWLEDGE, THE BUILDING DESIGN PLANS AND SPECIFICATIONS COMPLY WITH BUILDING STRUCTURAL DESIGN CODE. THE SIGNING AND SEALING OF THE PLANS AND SPECIFICATIONS ARE ONLY FOR THE BUILDING'S STRUCTURAL COMPONENTS AFFECTED BY WIND, LIVE AND DEAD LOADS.
10244 East Colonial Drive, Suite 202
Orlando, Florida 32817 – 407-677-5565 Fax 407-730-2999
Certificate of Authorization No. 25813
Wenyi Hu P.E.
Alabama No. 26652

ALABAMA LICENSED No. 26652 PROFESSIONAL ENGINEER
4/28/2022

THE ROBERT MADISON	Drawn:	CW
	Checked:	CW
	Approval:	MX
MADISON, ALABAMA	Date:	02-20-22
	Project #:	XXX-XXX

BUILDING TYPE B
2nd FLOOR FRAMING PLAN

S2.02

PLOTTED:

© 2018 These documents and their contents are the property of FUGLEBERG KOCH - AA26002103, and are issued for the specific project noted on these drawings. Any reproductions, revisions, or modifications of these documents without the expressed written consent of Fugleberg Koch is prohibited by law.

PLAN NOTES:

1. SEE GENERAL NOTES ON SHEET S0.01 & S0.02.
2. DO NOT SCALE DRAWINGS. SEE ARCH'L. DRAWINGS FOR ADDITIONAL DIMENSIONS NOT SHOWN; VERIFY ALL DIMENSIONS WITH ARCH'L. DRAWINGS PRIOR TO START OF CONSTRUCTION. IF DISCREPANCIES SHOULD OCCUR – CONTACT THE ARCHITECT IN WRITING FOR CLARIFICATION BEFORE PROCEEDING.
3. ◯ INDICATES WOOD STUD SHEAR WALL TYPE, AND SHADING INDICATES EXTENT OF SHEAR WALL. SEE THE SHEAR WALL SCHEDULE ON SHEET S0.02 FOR SHEAR WALL INFORMATION.
4. SEE ARCH'L. DRAWINGS FOR LOCATIONS/LIMITS AND CONSTRUCTION INFORMATION OF INTERIOR NON-BEARING PARTITION WALLS NOT SHOWN ON PLAN. SEE GENERAL NOTES (SHEET S0.01) FOR ADDITIONAL WALL FRAMING INFORMATION.
5. PROVIDE WOOD HEADER OVER ALL OPENINGS IN WOOD WALLS (COORD. EXACT SIZE, LOCATION AND ELEVATIONS WITH ARCH'L. DRAWINGS) IF NO HEADER TYPE HAS BEEN CALL-OUT ON PLAN, PROVIDE WOOD HEADER BASED ON HEADER SCHEDULE SHOWN ON S0.01 SHEET. SEE DETAIL 1/S5.04 FOR CONT. HEADER OVER NON-MULLED WINDOWS AND STRAPPING.
6. PRE-ENGINEERED 18" DEEP WOOD TRUSSES AT 24" O.C. (MAX) U.N.O., 15" DEEP WOOD TRUSSES AT 24" O.C. (MAX) U.N.O AT BALCONY/BREEZEWAY WITH 3/4" P.T. C-D PLYWOOD SHEATHING.
7. COORDINATE LOCATION OF FLOOR TRUSSES W/ MECH. DWGS FOR LOCATION OF EXHAUST FAN, AIR HANDLING, AND DUCTS.
8. F.G.T. INDICATES FLOOR GIRDER TRUSS.
9. THE REQUIRED NUMBER OF FASTENERS FOR CONNECTORS SUCH AS NAILS TO WOOD MEMBERS, SEE SIMPSON CATALOG.
10. SEE THE GENERAL NOTES FOR FLOOR SHEATHING INFORMATION, AND FOR WOOD TRUSS TYPES.
11. PROVIDE DOUBLE WOOD STUDS UNDER WOOD HEADER, WOOD BEAM, F.G.T., G.T. CONTINUOUS TO THE FTG. U.N.O. (PROVIDE (2) 2X4 WOOD BLOCKING BETWEEN TRUSS TOP AND BOTTOM CORDS BELOW)
12. AT DOORWAYS FOR INTERIOR BEARING WALLS, ADD A (2) 2x BLOCKING BETWEEN FLOOR LEVELS.
13. SEE ARCH DRAWINGS FOR SPECS ON LIGHTWEIGHT CONCRETE OVER WOOD JOIST TYP.
14. INDICATES MASONRY BEARING WALLS REINFORCED WITH (1)-#5 VERTICAL GROUT FILLED CELLS SOLID AT ALL CORNERS, ADJACENT MASONRY OPENINGS AND 24" O.C. (MAX) .
15. PROVIDE DOUBLE KNOCK OUT BLOCK BOND BEAM AT EA FLOOR LEVEL WITH #5 BARS AT EA COURSE.
16. PROVIDE PRECAST "U" LINTELS OVER ALL OPENINGS IN MASONRY WALL (COORD. EXACT SIZE, LOCATIONS AND ELEVATIONS WITH ARCH'L. DRAWINGS). IF NO LINTEL TYPE HAS BEEN CALL-OUT ON PLAN, PROVIDE MASONRY LINTEL TYPE: 8F16-1B/1T, AND 8F14-1B/1T FOR DOOR SEE "LINTEL SCHEDULE" (ON SHEET S5.00) FOR LINTEL TYPE SIZES AND REINFORCING. PROVIDE TEMPORARY SHORING DURING CONSTRUCTION IF LINTEL SPAN IS GREATER THAN 6 (SIX) FEET.
17. SEE ARCH PLANS FOR OUTSIDE CORNER PANEL SHADOW BOX LOCATIONS AND DETAIL 12/S5.03 FOR CONNECTION/FRAMING SPECS.

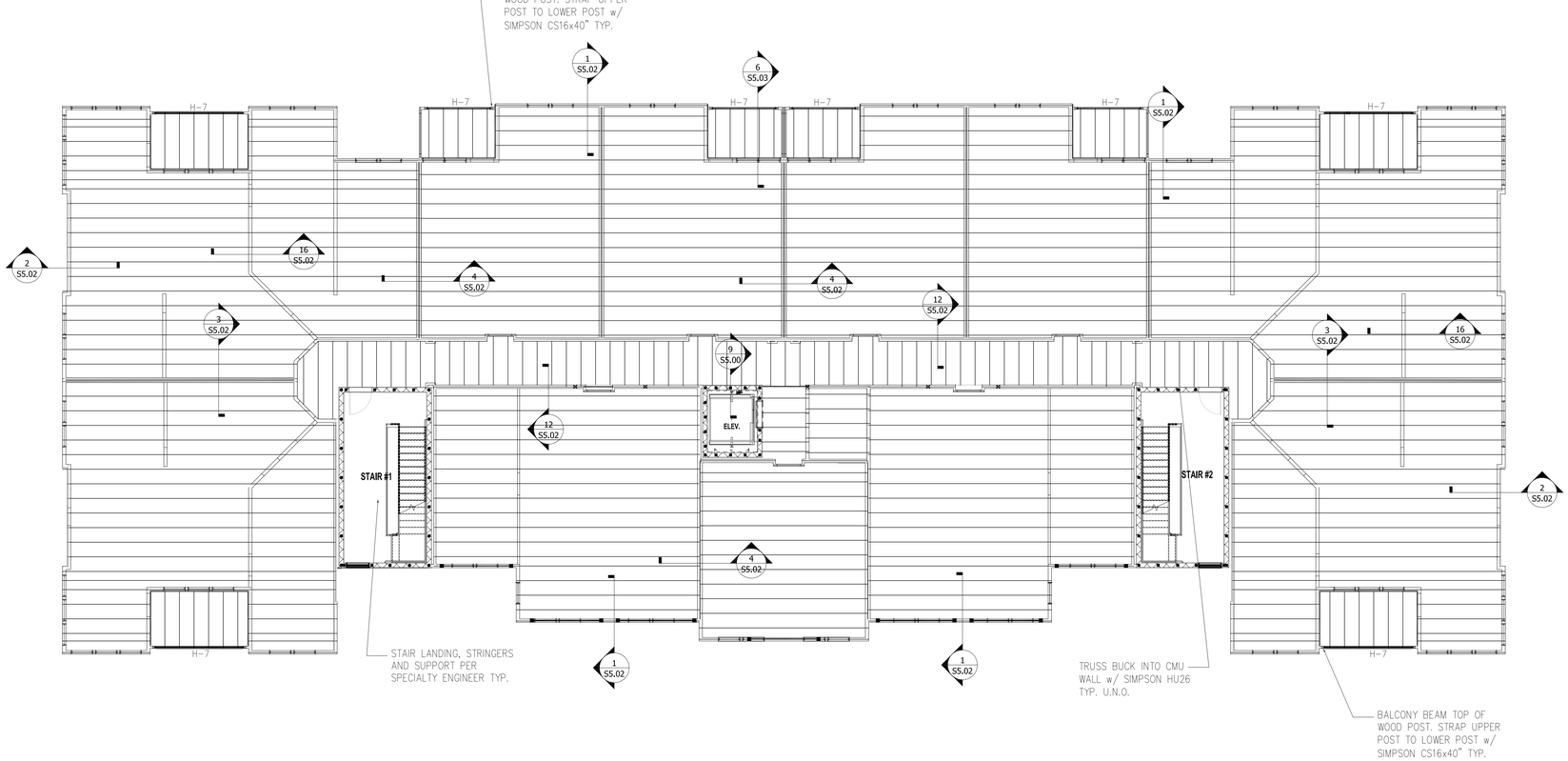

1 3RD FLOOR PLAN
SCALE: 1/8" = 1'-0"

U.S. DEPARTMENT OF HOUSING AND URBAN DEVELOPMENT

ISSUE HISTORY

No.	Date	Description
1	04/15/22	PERMIT SUBMISSION

REVISION HISTORY

No.	Date	Description

FUGLEBERG KOCH
2555 Temple Trail, Winter Park, FL 32789 (407) 629-0595
www. fuglebergkoch.com AA26002103

CONSULTANT

ASE ENGINEERING SERVICES, INC.
STRUCTURAL DESIGN GROUP
TO THE BEST OF MY KNOWLEDGE, THE BUILDING DESIGN PLANS AND SPECIFICATIONS COMPLY WITH BUILDING STRUCTURAL DESIGN CODE. THE SIGNING AND SEALING OF THE PLANS AND SPECIFICATIONS ARE ONLY FOR THE BUILDING STRUCTURAL COMPONENTS AFFECTED BY WIND, LIVE AND GRAVITY LOADS.
10244 East Colonial Drive, Suite 202
Orlando, Florida 32817 – 407-677-5565 Fax 407-730-2999
Certificate of Authorization No. 25873
Wenyi Hu P.E.
Alabama No. 26652

ALABAMA LICENSED No. 26652 PROFESSIONAL ENGINEER
4/26/2022

Drawn:	CW
Checked:	CW
Approval:	MX
Date:	02-20-22
Project #:	XXX-XXX

THE ROBERT MADISON
MADISON, ALABAMA

BUILDING TYPE B
3rd FLOOR FRAMING PLAN

S2.03

PLOTTED:

© 2018 These documents and their contents are the property of FUGLEBERG KOCH – AA26002103, and are issued only for the specific project shown herein. Any reproductions, revisions, or modifications of these documents without the expressed written consent of Fugleberg Koch is prohibited by law.

PLAN NOTES:

1. SEE GENERAL NOTES ON SHEET S0.01 & S0.02.
2. DO NOT SCALE DRAWINGS. SEE ARCH'L. DRAWINGS FOR ADDITIONAL DIMENSIONS NOT SHOWN, VERIFY ALL DIMENSIONS WITH ARCH'L. DRAWINGS PRIOR TO START OF CONSTRUCTION. IF DISCREPANCIES SHOULD OCCUR – CONTACT THE ARCHITECT IN WRITING FOR CLARIFICATION BEFORE PROCEEDING.
3. ◯ INDICATES WOOD STUD SHEAR WALL TYPE, AND SHADING INDICATES EXTENT OF SHEAR WALL. SEE THE SHEAR WALL SCHEDULE ON SHEET S0.02 FOR SHEAR WALL INFORMATION.
4. SEE ARCH'L. DRAWINGS FOR LOCATIONS/LIMITS AND CONSTRUCTION INFORMATION OF INTERIOR NON-BEARING PARTITION WALLS NOT SHOWN ON PLAN. SEE GENERAL NOTES (SHEET S0.01) FOR ADDITIONAL WALL FRAMING INFORMATION.
5. PROVIDE WOOD HEADER OVER ALL OPENINGS IN WOOD WALLS (COORD. EXACT SIZE, LOCATION AND ELEVATIONS WITH ARCH'L. DRAWINGS) IF NO HEADER TYPE HAS BEEN CALL-OUT ON PLAN, PROVIDE WOOD HEADER BASED ON HEADER SCHEDULE SHOWN ON S0.01 SHEET. SEE DETAIL 1/S5.04 FOR CONT. HEADER OVER NON-MULLED WINDOWS AND STRAPPING.
6. PRE-ENGINEERED 18" DEEP WOOD TRUSSES AT 24" O.C. (MAX) U.N.O., 15" DEEP WOOD TRUSSES AT 24" O.C. (MAX) U.N.O AT BALCONY/BREEZEWAY WITH 3/4" P.T. C-D PLYWOOD SHEATHING.
7. COORDINATE LOCATION OF FLOOR TRUSSES W/ MECH. DWGS FOR LOCATION OF EXHAUST FAN, AIR HANDLING, AND DUCTS.
8. F.G.T. INDICATES FLOOR GIRDER TRUSS.
9. THE REQUIRED NUMBER OF FASTENERS FOR CONNECTORS SUCH AS NAILS TO WOOD MEMBERS, SEE SIMPSON CATALOG.
10. SEE THE GENERAL NOTES FOR FLOOR SHEATHING INFORMATION, AND FOR WOOD TRUSS TYPES.
11. PROVIDE DOUBLE WOOD STUDS UNDER WOOD HEADER, WOOD BEAM, F.G.T., G.T. CONTINUOUS TO THE FTG. U.N.O. (PROVIDE (2) 2X4 WOOD BLOCKING BETWEEN TRUSS TOP AND BOTTOM CORDS BELOW)
12. AT DOORWAYS FOR INTERIOR BEARING WALLS, ADD A (2) 2x BLOCKING BETWEEN FLOOR LEVELS.
13. SEE ARCH DRAWINGS FOR SPECS ON LIGHTWEIGHT CONCRETE OVER WOOD JOIST TYP.
14. INDICATES MASONRY BEARING WALLS REINFORCED WITH (1)-#5 VERTICAL GROUT FILLED CELLS SOLID AT ALL CORNERS, ADJACENT MASONRY OPENINGS AND 24" O.C. (MAX) .
15. PROVIDE DOUBLE KNOCK OUT BLOCK BOND BEAM AT EA FLOOR LEVEL WITH #5 BARS AT EA COURSE.
16. PROVIDE PRECAST "U" LINTELS OVER ALL OPENINGS IN MASONRY WALL (COORD. EXACT SIZE, LOCATIONS AND ELEVATIONS WITH ARCH'L. DRAWINGS). IF NO LINTEL TYPE HAS BEEN CALL-OUT ON PLAN, PROVIDE MASONRY LINTEL TYPE: 8F16-1B/1T, AND 8F14-1B/1T FOR DOOR SEE "LINTEL SCHEDULE" (ON SHEET S5.00) FOR LINTEL TYPE SIZES AND REINFORCING. PROVIDE TEMPORARY SHORING DURING CONSTRUCTION IF LINTEL SPAN IS GREATER THAN 6 (SIX) FEET.
17. SEE ARCH PLANS FOR OUTSIDE CORNER PANEL SHADOW BOX LOCATIONS AND DETAIL 12/S5.03 FOR CONNECTION/FRAMING SPECS.

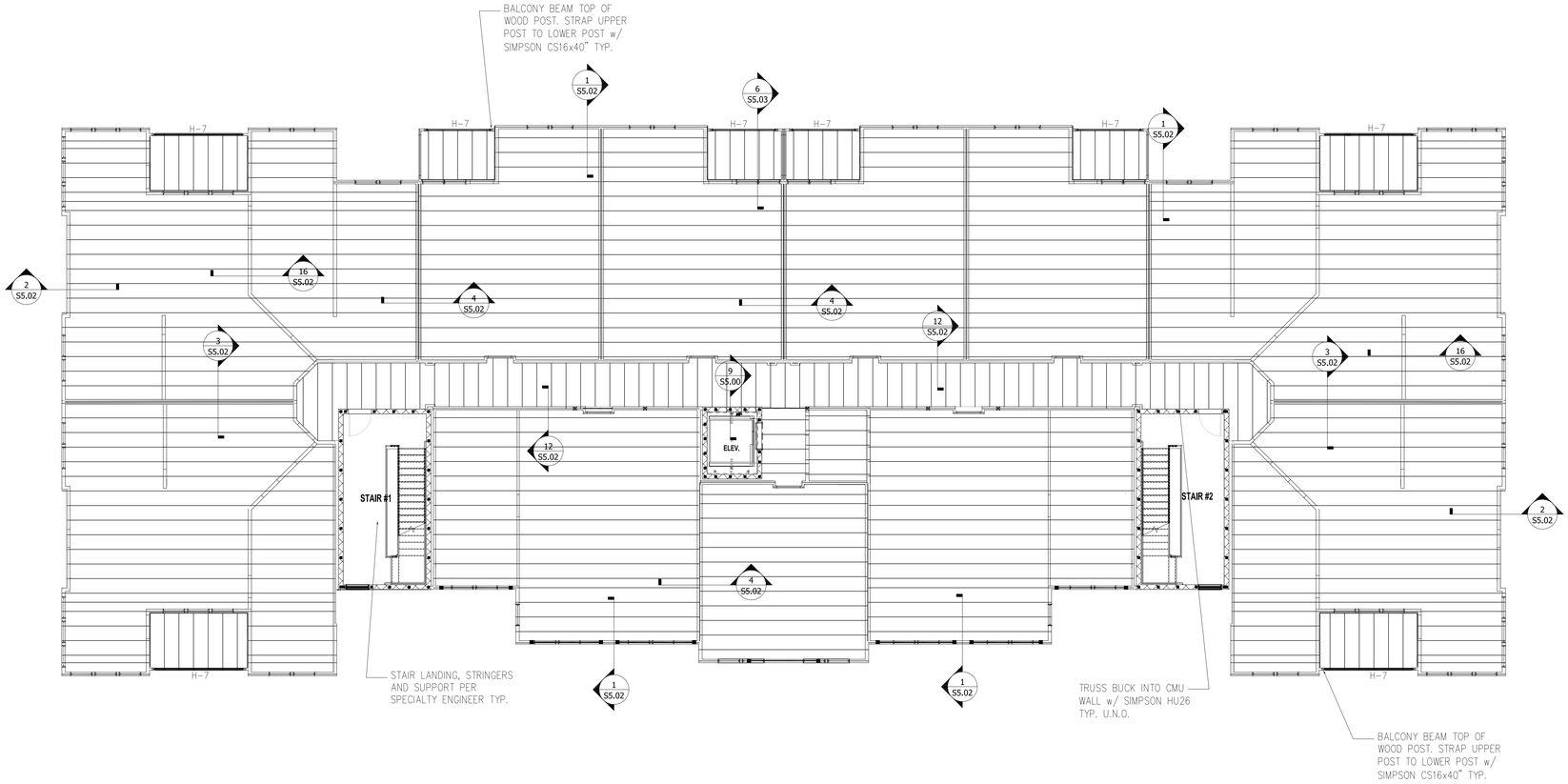

1 4th FLOOR PLAN
SCALE: 1/8" = 1'-0"

U.S. DEPARTMENT OF HOUSING AND URBAN DEVELOPMENT

ISSUE HISTORY

No.	Date	Description
1	04/15/22	PERMIT SUBMISSION

REVISION HISTORY

No.	Date	Description

© 2018 These documents and their contents are the property of FUGLEBERG KOCH - AA26002103, and are issued only for the specific project noted on these drawings. Any reproductions, revisions, or modifications of these documents without the expressed written consent of Fugleberg Koch is prohibited by law.

FUGLEBERG KOCH
2555 Temple Trail, Winter Park, FL 32789 (407) 629-0595
www. fuglebergkoch.com AA26002103
CONSULTANT

ASE ENGINEERING SERVICES, INC.
STRUCTURAL DESIGN GROUP
TO THE BEST OF MY KNOWLEDGE, THESE DRAWINGS AND SPECIFICATIONS COMPLY WITH BUILDING STRUCTURAL DESIGN CODE. THE DESIGNS AND SEALING OF THE PLANS AND SPECIFICATIONS ARE ONLY FOR THE BUILDING'S STRUCTURAL COMPONENTS AFFECTED BY WIND, LIVE AND GRAVITY LOADS.
10244 East Colonial Drive, Suite 202
Orlando, Florida 32817 – 407-677-5565 Fax 407-730-2999
Certificate of Authorization No. 25873
Wenyi Hu P.E.
Alabama No. 26652

ALABAMA LICENSED No. 26652 PROFESSIONAL ENGINEER
4/26/2022

Drawn:	CW
Checked:	CW
Approval:	MX
Date:	02-20-22
Project #:	XXX-XXX

THE ROBERT MADISON
MADISON, ALABAMA

BUILDING TYPE B
4th FLOOR FRAMING PLAN

S2.04

PLOTTED:

PLAN NOTES:

1. SEE GENERAL NOTES ON SHEET S0.01 & S0.02.
2. DO NOT SCALE DRAWINGS. SEE ARCH'L. DRAWINGS FOR ADDITIONAL DIMENSIONS NOT SHOWN. VERIFY ALL DIMENSIONS WITH ARCH'L. DRAWINGS PRIOR TO START OF CONSTRUCTION. IF DISCREPANCIES SHOULD OCCUR – CONTACT THE ARCHITECT IN WRITING FOR CLARIFICATION BEFORE PROCEEDING.
3. SEE ARCH'L. DRAWINGS FOR LOCATIONS/LIMITS AND CONSTRUCTION INFORMATION OF INTERIOR NON-BEARING PARTITION WALLS NOT SHOWN ON PLAN. SEE GENERAL NOTES (SHEET S0.01) FOR ADDITIONAL WALL FRAMING INFORMATION.
4. PROVIDE WOOD HEADER OVER ALL OPENINGS IN WOOD WALLS (COORD. EXACT SIZE, LOCATION AND ELEVATIONS WITH ARCH'L. DRAWINGS) IF NO HEADER TYPE HAS BEEN CALL-OUT ON PLAN, PROVIDE WOOD HEADER BASED ON HEADER SCHEDULE SHOWN ON S0.01 SHEET.
5. PRE-ENGINEERED WOOD TRUSSES & MISCELLANEOUS WOOD FRAMING SPACED AT 24"O.C.(MAX).
6. O.B. INDICATES OVER-BUILT PRE-ENG. TRUSS.
7. G.T. INDICATES GIRDER TRUSS.
8. THE REQUIRED NUMBER OF FASTENERS FOR CONNECTORS SUCH AS NAILS TO WOOD MEMBERS, SEE SIMPSON CATALOG.
9. SEE THE GENERAL NOTES FOR ROOF SHEATHING INFORMATION, AND FOR WOOD TRUSS TYPES.
10. TRUSS ENGINEER TO DESIGN TRUSS TO INCORPORATE LOADS FROM MECHANICAL UNITS.
11. PROVIDE DOUBLE WOOD STUDS UNDER WOOD HEADER, WOOD BEAM, F.G.T., G.T. TO THE FTG. U.N.O.
12. 2x10 JOIST @ 16" O.C. TOP OF ELEVATOR SHAFT. SEE DETAILS 7,11/S5.00 FOR JOIST LAYOUT AND HOIST BEAM CONNECTION.

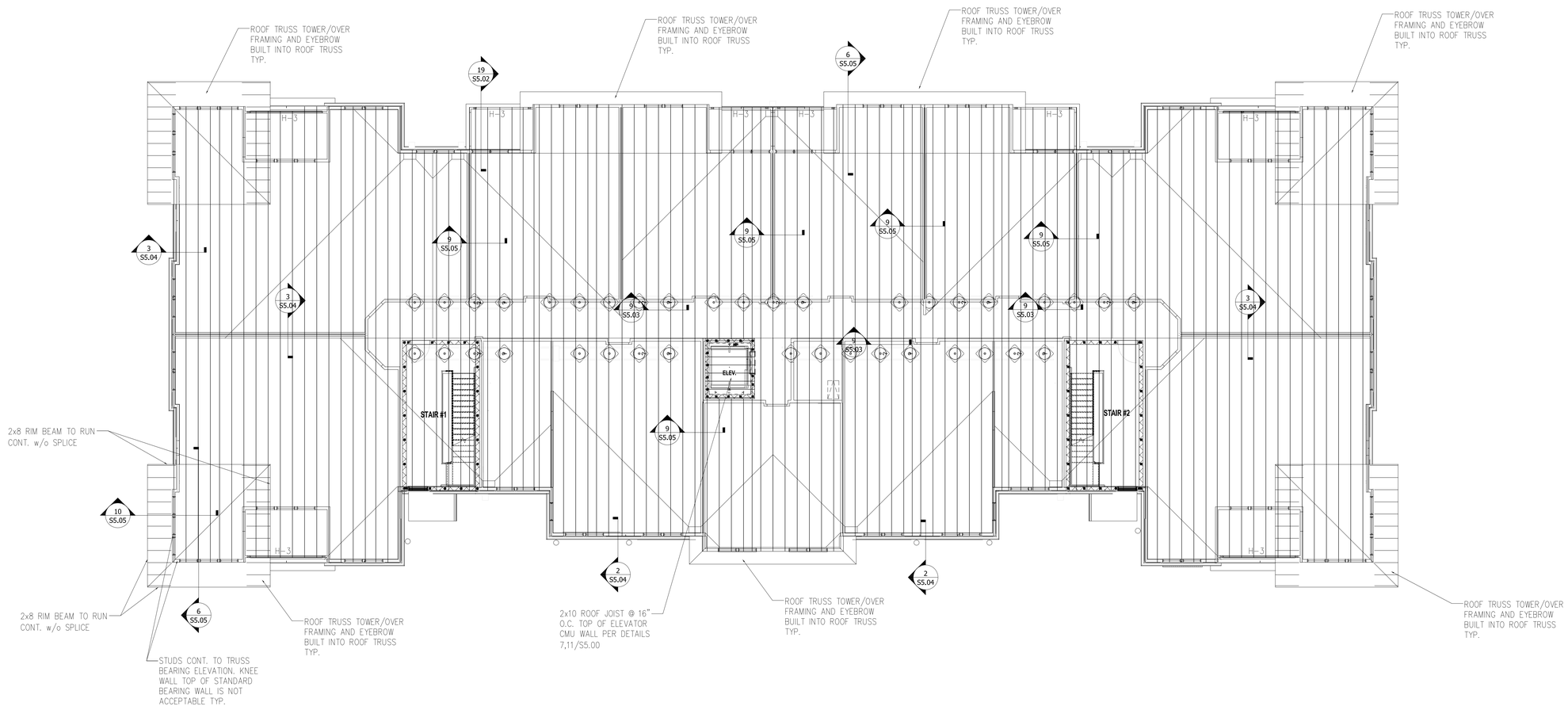

1 ROOF FRAMING PLAN
SCALE: 1/8" = 1'-0"

U.S. DEPARTMENT OF HOUSING AND URBAN DEVELOPMENT

ISSUE HISTORY

No.	Date	Description
1	04/15/22	PERMIT SUBMISSION

REVISION HISTORY

No.	Date	Description

© 2018 These documents and their contents are the property of FUGLEBERG KOCH - AA26002103. Any reproductions, revisions, or modifications of these documents without the expressed written consent of Fugleberg Koch is prohibited by law.

FUGLEBERG KOCH
2555 Temple Trail, Winter Park, FL 32789 (407) 629-0595
www. fuglebergkoch.com AA26002103
CONSULTANT

ASE ENGINEERING SERVICES, INC.
STRUCTURAL DESIGN GROUP
TO THE BEST OF MY KNOWLEDGE THESE DRAWINGS AND SPECIFICATIONS COMPLY WITH BUILDING STRUCTURAL DESIGN CODE. THE DESIGNS AND SEALING OF THE PLANS AND SPECIFICATIONS ARE ONLY FOR THE BUILDING'S STRUCTURAL COMPONENTS AFFECTED BY WIND, LIVE AND GRAVITY LOADS.
10244 East Colonial Drive, Suite 202
Orlando, Florida 32817 – 407-677-5565 Fax 407-730-2999
Certificate of Authorization No. 25873
Wenyi Hu P.E.
Alabama No. 26652

ALABAMA LICENSED No. 26652 PROFESSIONAL ENGINEER
4/26/2022

Drawn:	CW
Checked:	CW
Approval:	MX
Date:	02-20-22
Project #:	XXX-XXX

THE ROBERT MADISON
MADISON, ALABAMA

BUILDING TYPE B
ROOF FRAMING PLAN

S2.05

PLOTTED:

MASONRY WALL CONSTRUCTION

1. HOLLOW LOAD BEARING UNITS SHALL BE NORMAL WEIGHT, GRADE N, TYPE 2, CONFORMING TO ASTM C90, WITH A MINIMUM NET COMPRESSIVE STRENGTH OF 1900 PSI ($f'm$ = 1500 PSI).

2. MORTAR SHALL BE TYPE M OR S, CONFORMING TO ASTM C270.

3. COURSE GROUT USED TO FILL MASONRY CELLS SHALL CONFORM TO ASTM C476 WITH A MAXIMUM AGGREGATE SIZE OF 3/8" AND A MINIMUM COMPRESSIVE STRENGTH OF 3,000 PSI. AT 28 DAYS. THE GROUT SHALL BE PLACED WITH A SLUMP OF 8" TO 11". PLACE GROUT IN ACCORDANCE WITH ACI 530-11.

4. VERTICAL REINFORCEMENT SHALL BE AS NOTED ON THE DRAWINGS WITH CELLS FILLED WITH COARSE GROUT.

5. VERTICAL REINFORCEMENT SHALL BE HELD IN POSITION AT THE TOP AND BOTTOM. REINFORCEMENT SHALL BE PLACED IN THE CENTER OF THE MASONRY CELL TYPICAL UNLESS OTHERWISE NOTED. SEE TYPICAL GROUTING DETAIL FOR ADDITIONAL INFORMATION.

6. REINFORCING STEEL SHALL BE LAPPED MINIMUM 48 BAR DIAMETERS UNLESS NOTED OTHERWISE ON THE DRAWINGS.

7. HORIZONTAL WALL REINFORCEMENT SHALL BE STANDARD TRUSS TYPE DUR-O-WAL (9 GA. SIDE X 9 GA. CROSS) @ 16" O.C., UNLESS SHOWN OTHERWISE ON DRAWINGS.

8. WHEN A FOUNDATION DOWEL DOES NOT LINE UP WITH A VERTICAL CORE, IT SHALL NOT BE SLOPED MORE THAN ONE HORIZONTAL IN SIX VERTICALS. DOWELS SHALL BE GROUTED INTO A CORE IN VERTICAL ALIGNMENT, EVEN THOUGH IT IS IN AN ADJACENT CELL TO THE VERTICAL WALL REINFORCEMENT.

9. PROVIDE PRECAST CONCRETE LINTELS OVER ALL OPENINGS UNLESS NOTED OTHERWISE ON DRAWINGS. LINTELS SHALL BE OF SUFFICIENT SIZE AND REINFORCEMENT FOR THE GIVEN SPANS AND LOADING CONDITIONS. SUBMIT SHOP DRAWINGS WITH RATED LOAD CAPACITIES TO THE ARCHITECT FOR REVIEW.

10. SPECIAL INSPECTION OF UNIT MASONRY IS REQUIRED.

11. THIS DESIGN MEETS THE REQUIREMENTS OF ACI 530.1, ASCE 7-16.

12. ALL UNIT MASONRY CONSTRUCTION SHALL COMPLY WITH FBC 2020.

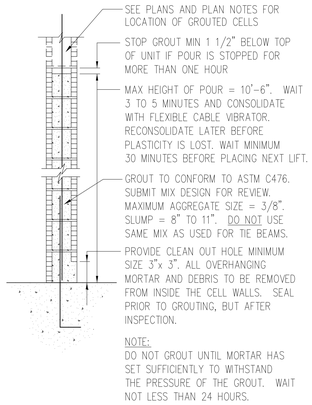

1 GROUTING SECTION TYPICAL HIGH LIFT
SCALE: N.T.S.

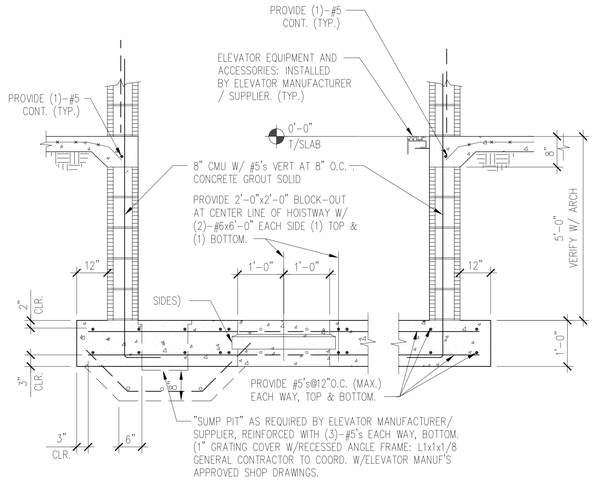

2 ELEVATOR PIT DETAIL
SCALE 3/4" = 1'-0"

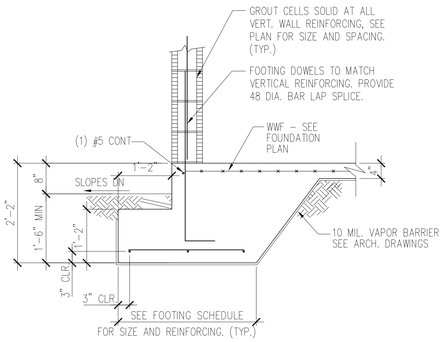

3 CMU WALL AT EXT. FOOTER
SCALE 3/4" = 1'-0"

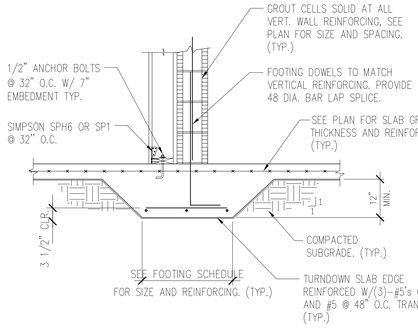

4 THICKENED SLAB/FOOTING
SCALE: N.T.S.

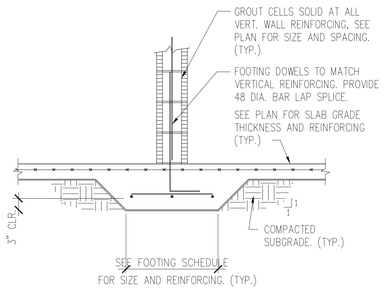

5 THICKENED SLAB/FOOTING
SCALE: N.T.S.

MASONRY LINTEL SCHEDULE
(CAST-CRETE LINTEL)

MARK	LENGTH (L)	CAST-CRETE MARK	REMARK
MB-1	2' -10"< L ≤ 5'-10"	8F16-0B/1T PRECAST	
MB-2	5' -10"< L ≤ 14'-0"	8F16-1B/1T PRECAST	
MB-3	14' -0"< L ≤ 21'-4"	8F16-1B/1T PRESTRESSED	
MB-4	14' -0"< L ≤ 21'-4"	8F28-2B/1T PRESTRESSED	

1. PROVIDE MASONRY LINTEL OVER ALL OPENINGS. IF NO LINTEL IS SPECIFIED, PROVIDE MB-2.
2. PROVIDE MINIMUM END BEARING OF 8". CUT OUT BOTTOM OF LINTEL AT END TO ALLOW CONTINUATION OF FILLED CELL REINFORCING.
3. MASONRY LINTEL SUBSTITUTIONS MUST BE APPROVED BY "ADVANCED STRUCTURAL ENGINEERING" PRIOR TO INSTALLATION.

NOTE: SHORE PRECAST "U" LINTELS PER MANUFACTURER'S RECOMMENDATIONS.

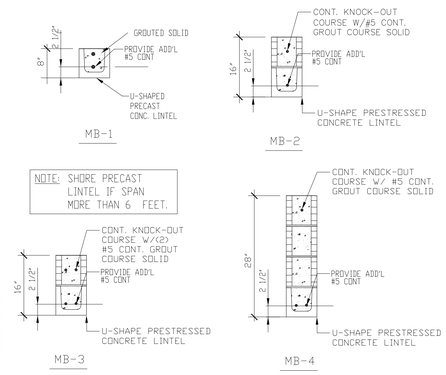

6 MASONRY LINTEL SCHEDULE
SCALE: N.T.S.

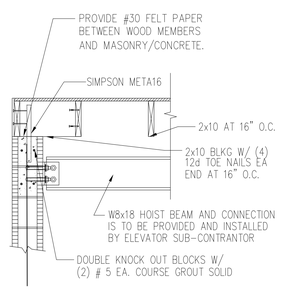

7 SECTION @ ELEVATOR
SCALE: N.T.S.

BRICK VENEER LINTELS:
1. ALL STEEL VENEER LINTELS SHALL BE HOT-DIPPED GALVANIZED AND HAVE A MINIMUM BEARING OF 6 INCHES AT EACH END.
2. PROVIDE BRICK TIES FROM BRICK TO WOOD STUDS @ 16" O.C. EACH WAY.

VENEER LINTEL SCHEDULE	
MAX CLEAR SPAN "L"	STEEL VENEER LINTEL
3'-0" MAX	L4x4x1/4
4'-0" MAX	L4x4x1/4
6'-0" MAX	L5x5x5/16
11'-0" MAX	L8x5x7/16 LLV (BENT PLATE)
13'-0" MAX @ ONE STORY WALLS OR 4'-0" MAX. TALL BRICK FACING	L8x5x7/16 LLV (BENT PLATE)

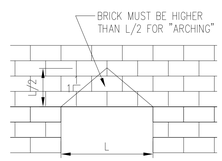

(GC TO NOTIFY EOR IF FIELD CONDITIONS DIFFER FROM WHAT IS PRESENTED

8 SECTION
SCALE: N.T.S.

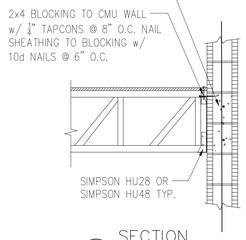

9 SECTION
SCALE: N.T.S.

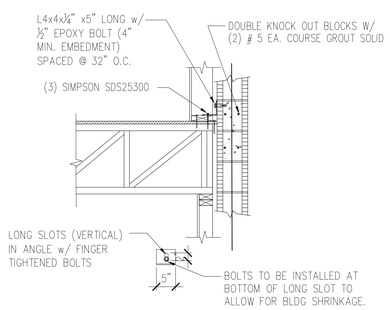

TYPICAL ANGLE CONNECTION AT CMU WALL
10 SCALE 3/4" = 1'-0"

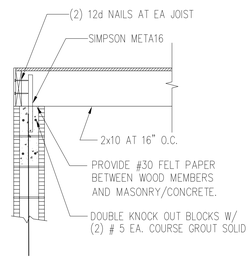

11 SECTION @ ELEVATOR
SCALE: N.T.S.

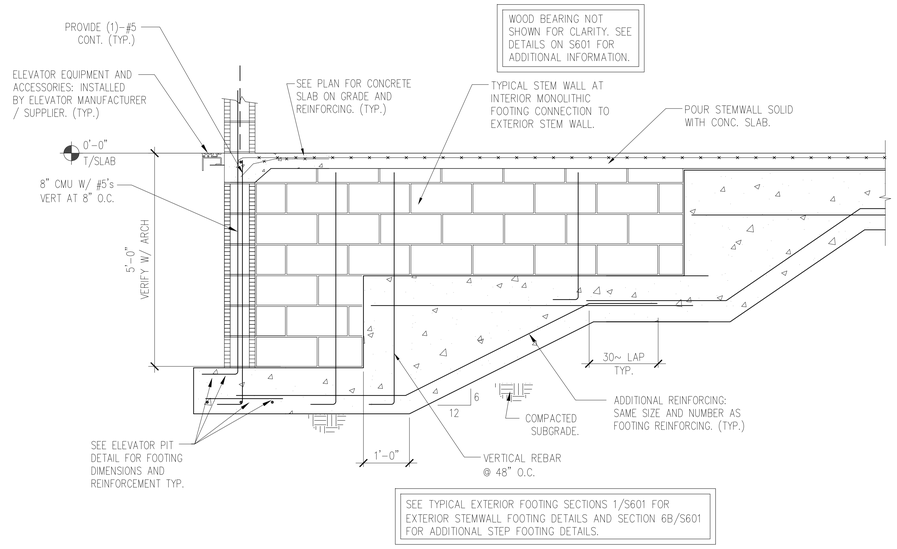

TYP. FOOTING TRANSITION FOR INTERIOR FOOTERS AT ELEV. PIT
11 SCALE 3/4" = 1'-0"

ISSUE HISTORY

No.	Date	Description
1	04/15/22	PERMIT SUBMISSION

REVISION HISTORY

No.	Date	Description

© 2018 These documents and their contents are the property of FUGLEBERG KOCH - AA26002103. Any reproductions, revisions, or modifications of these documents without the expressed written consent of Fugleberg Koch is prohibited by law.

FUGLEBERG KOCH
2555 Temple Trail, Winter Park, FL 32789 (407) 629-0595
www. fuglebergkoch.com AA26002103
CONSULTANT

ASE ENGINEERING SERVICES, INC.
STRUCTURAL DESIGN GROUP
TO THE BEST OF MY KNOWLEDGE, THE BUILDING DESIGN PLANS AND SPECIFICATIONS COMPLY WITH BUILDING STRUCTURAL DESIGN CODE. THE SIGNING AND SEALING OF THE PLANS AND SPECIFICATIONS ARE ONLY FOR THE BUILDING STRUCTURAL COMPONENTS AFFECTED BY WIND, LIVE AND GRAVITY LOADS.
10244 East Colonial Drive, Suite 202
Orlando, Florida 32817 – 407-677-5565 Fax 407-730-2999
Certificate of Authorization No. 25873
Wenyi Hu P.E.
Alabama No. 26652

ALABAMA LICENSED No. 26652 PROFESSIONAL ENGINEER
4/26/2022

THE ROBERT MADISON
MADISON, ALABAMA

Drawn:	CW
Checked:	CW
Approval:	MX
Date:	02-20-22
Project #:	XXX-XXX

SECTION AND DETAILS BLDG TYPES A, B & C

S5.00

PLOTTED:

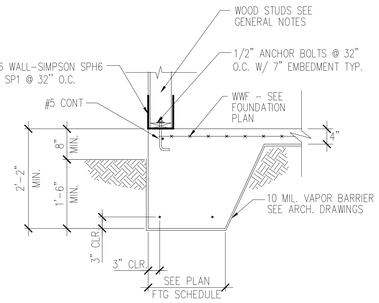

1 SECTION
SCALE 3/4" = 1'-0"

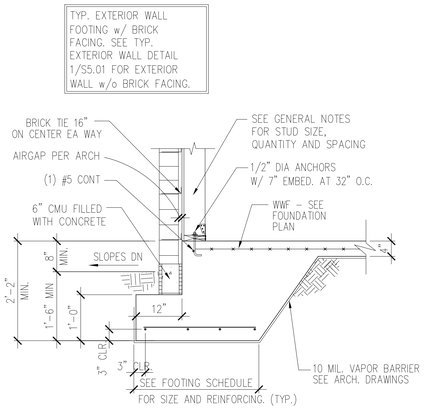

2 SECTION
SCALE = N.T.S.

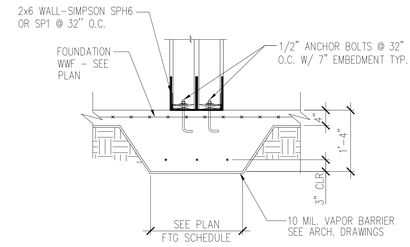

3 SECTION
SCALE 3/4" = 1'-0"

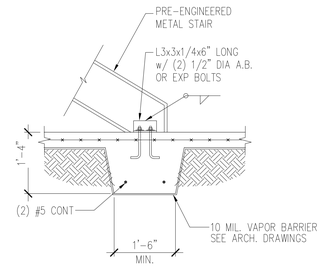

4 SECTION
SCALE 3/4" = 1'-0"

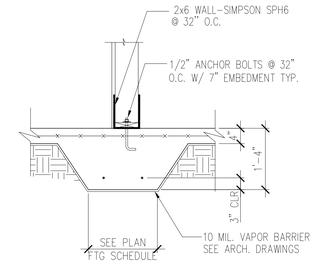

5 SECTION
SCALE 3/4" = 1'-0"

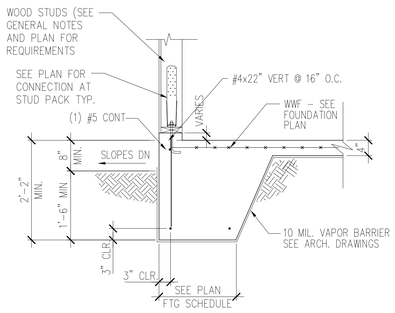

6 SECTION
SCALE 3/4" = 1'-0"

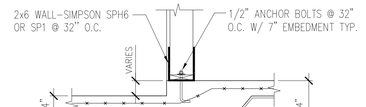

7 SECTION
SCALE 3/4" = 1'-0"

CONTROL JOINT CONSTRUCTION JOINT

NOTE:

1. CONSTRUCTION JOINTS MAYBE USED IN LIEU OF CONTROL JOINTS.
2. JOINT PLACEMENT REQUIREMENTS:
   FOR INCLOSED / INTERIOR AREAS. 20'-0" O.C. (MAX.) EACH WAY
   FOR OUTSIDE / EXTERIOR AREAS. 8'-0" O.C. (MAX.) EACH WAY
   WHERE TOP OF SLAB SURFACES ARE TO BE FINISHED WITH TILE - GENERAL CONTRACTOR IS TO COORDINATE JOINT LOCATIONS WITH THAT OF TILE MORTAR JOINTS. SUBMITTAL SHALL BE SENT TO THE ARCHITECT.

8 TYPICAL CONTROL JOINT DETAIL
SCALE 3/4" = 1'-0"

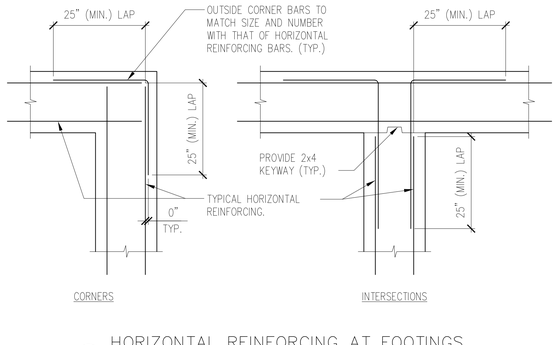

9 HORIZONTAL REINFORCING AT FOOTINGS
SCALE 3/4" = 1'-0"

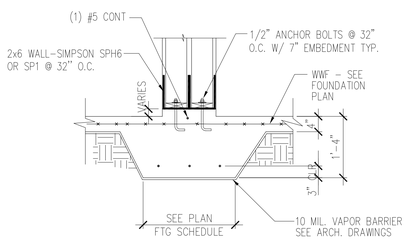

10 SECTION
SCALE 3/4" = 1'-0"

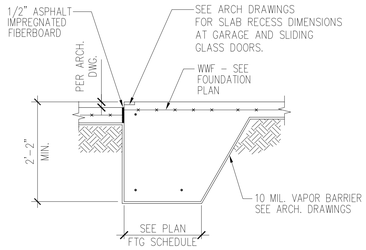

SCALE 3/4" = 1'-0"
11 SECTION

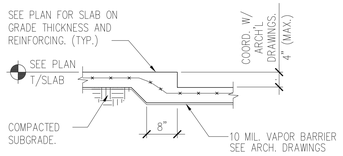

12 DEPRESSED SLAB DETAIL
SCALE 3/4" = 1'-0"

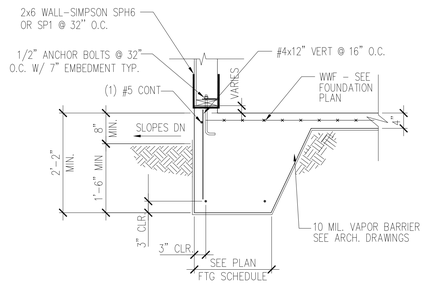

13 SECTION
SCALE 3/4" = 1'-0"

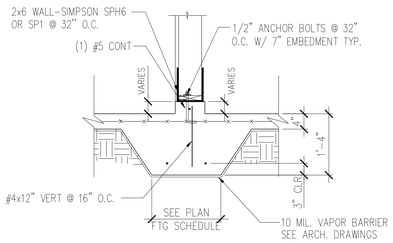

14 SECTION
SCALE 3/4" = 1'-0"

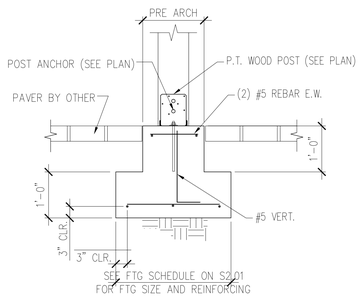

15 SECTION
SCALE 3/4" = 1'-0"

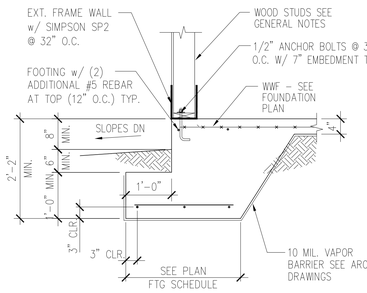

16 SECTION (FL TRUSS PERP. TO WALL)
SCALE 3/4" = 1'-0"

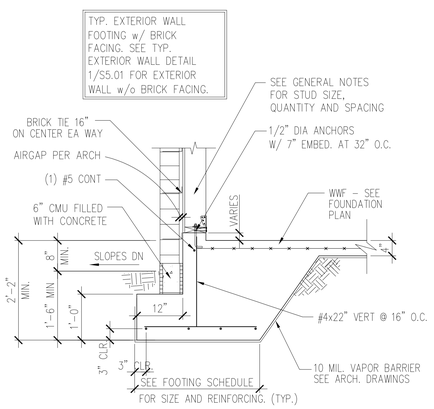

17 SECTION
SCALE = N.T.S.

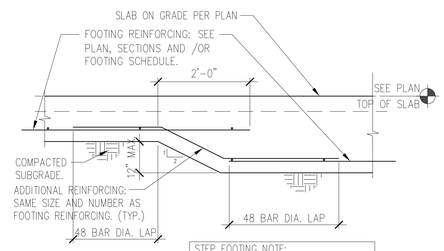

STEP FOOTING NOTE:
GENERAL CONTRACTOR TO COORDINATE WITH CIVIL ENGINEERING DRAWINGS TO FOOTING STEPS TO MAINTAIN MINIMUM EMBEDMENT OF FOUNDATION.

18 STEP FOOTING DETAIL
SCALE: N.T.S.

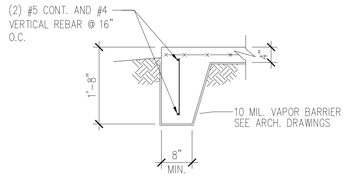

19 SECTION
SCALE 3/4" = 1'-0"

1 04/20/2021 Revisions in response to Contractor's RFI No. 042

ISSUE HISTORY

No.	Date	Description
1	04/15/22	PERMIT SUBMISSION

REVISION HISTORY

No.	Date	Description

FUGLEBERG KOCH
2555 Temple Trail, Winter Park, FL 32789 (407) 629-0595
www. fuglebergkoch.com AA26002103
CONSULTANT

ASE ENGINEERING SERVICES, INC.
STRUCTURAL DESIGN GROUP
TO THE BEST OF MY KNOWLEDGE, THE BUILDING DESIGN PLANS AND SPECIFICATIONS COMPLY WITH BUILDING STRUCTURAL DESIGN CODE, THE SIGNING AND SEALING OF THE PLANS AND SPECIFICATIONS ARE ONLY FOR THE BUILDING STRUCTURAL COMPONENTS AFFECTED BY WIND, LIVE AND GRAVITY LOADS.
10244 East Colonial Drive, Suite 202
Orlando, Florida 32817 - 407-677-5565 Fax 407-730-2999
Certificate of Authorization No. 25873
Wenyi Hu P.E.
Alabama No. 26652

ALABAMA LICENSED No. 26652 PROFESSIONAL ENGINEER
4/26/2022

THE ROBERT MADISON	Drawn:	CW
	Checked:	CW
	Approval:	MX
MADISON, ALABAMA	Date:	02-20-22
	Project #:	XXX-XXX

SECTION AND DETAILS BLDG TYPES A, B & C

S5.01

PLOTTED:

© 2018 These documents and their contents are the property of FUGLEBERG KOCH - AA26002103, and are intended for use on this specific project noted on these drawings. Any reproductions, revisions, or modifications of these documents without the expressed written consent of Fugleberg Koch is prohibited by law.

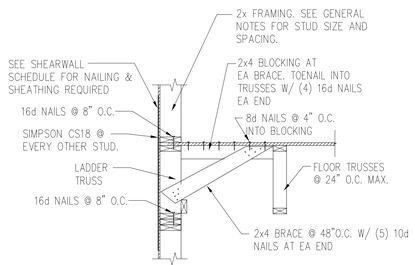

1 BRACING AT END WALL
SCALE 3/4" = 1'-0"

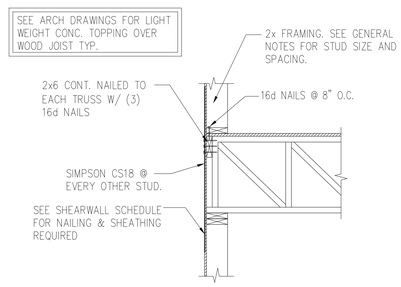

2 SECTION
SCALE 3/4" = 1'-0"

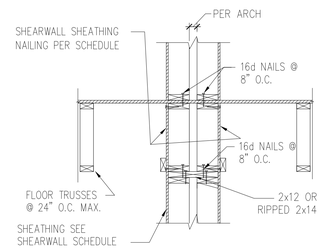

3 TENANT SEP. WALL/SHEARWALL SECTION
SCALE 3/4" = 1'-0"

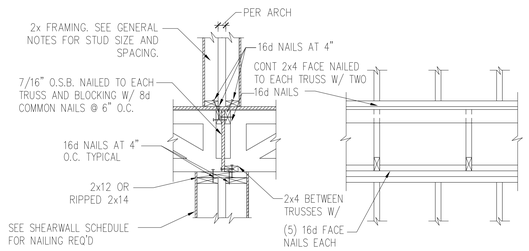

4 TYPICAL SHEATHING AND BLOCKING SHEARWALL DETAIL
SCALE 3/4" = 1'-0"

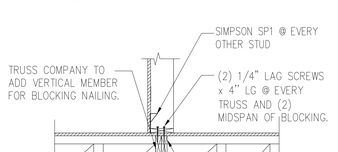

5 TYP. WALL SUPPORTED BY FLOOR TRUSSES
SCALE 3/4" = 1'-0"

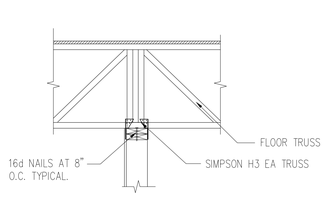

6 SECTION
SCALE 3/4" = 1'-0"

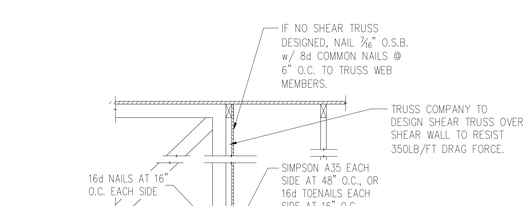

7 TENANT SEP. WALL/SHEARWALL SECTION @ ROOF
SCALE 3/4" = 1'-0"

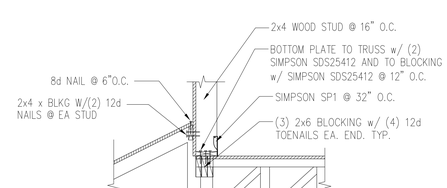

8 SECTION @ CANTILEVER TRUSS
SCALE 3/4" = 1'-0"

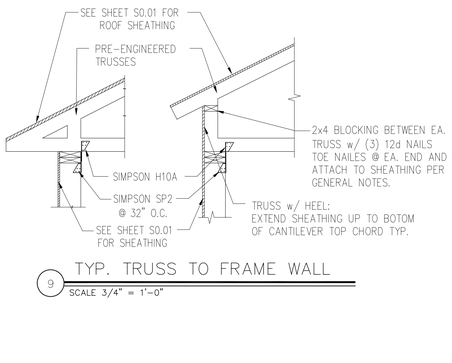

9 TYP. TRUSS TO FRAME WALL
SCALE 3/4" = 1'-0"

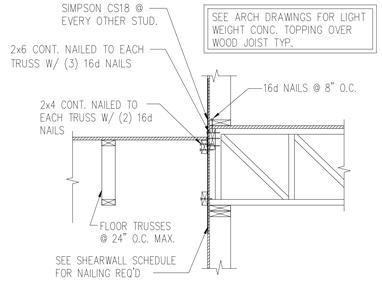

10 SECTION
SCALE 3/4" = 1'-0"

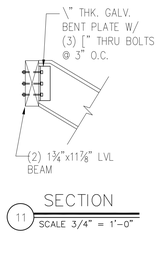

11 SECTION
SCALE 3/4" = 1'-0"

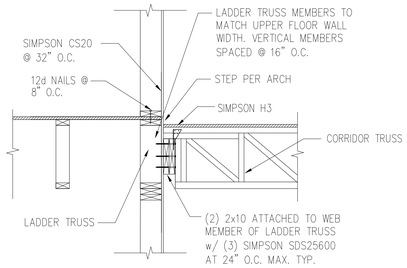

12 SECTION @ CORRIDOR
SCALE 3/4" = 1'-0"

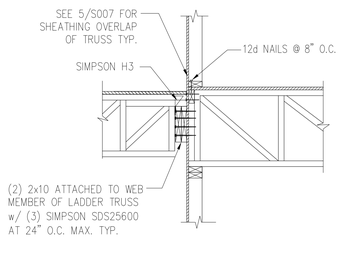

13 SECTION @ CORRIDOR
SCALE 3/4" = 1'-0"

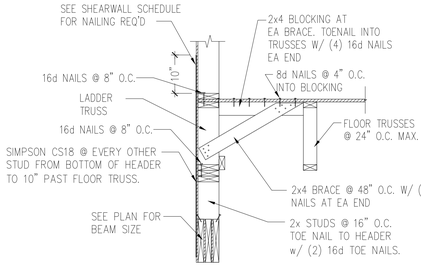

14 SECTION AT PARALEL TRUSS OVER GARAGE
SCALE 3/4" = 1'-0"

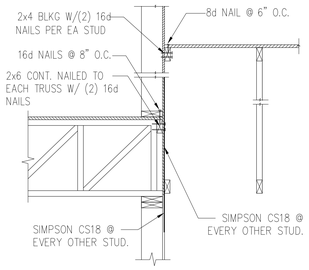

15 SECTION
SCALE 3/4" = 1'-0"

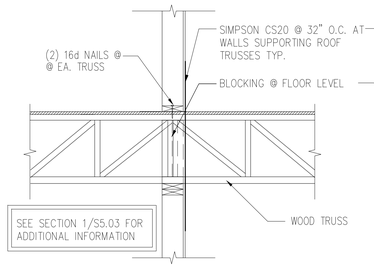

16 TYP. BLOCKING AT BEARING WALLS
SCALE 3/4" = 1'-0"

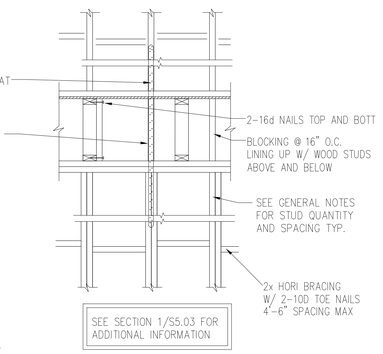

17 TYP. BLOCKING AT BEARING WALLS
SCALE 3/4" = 1'-0"

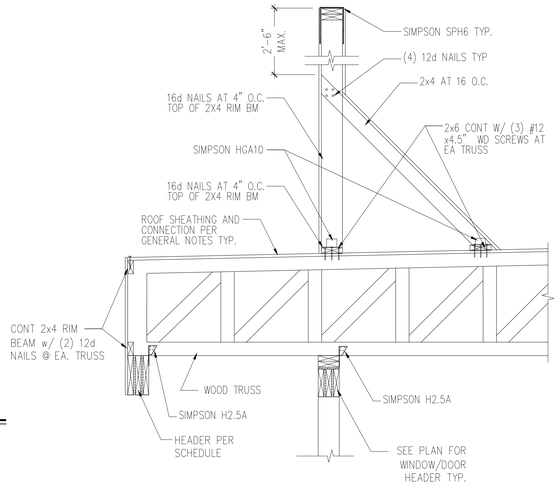

19 TYP. SECTION @ PARAPET WALL
SCALE 3/4" = 1'-0"

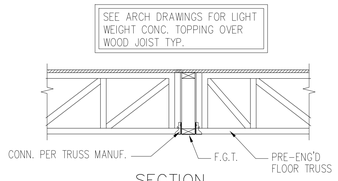

18 SECTION
SCALE 3/4" = 1'-0"

U.S. DEPARTMENT OF HOUSING AND URBAN DEVELOPMENT

ISSUE HISTORY

No.	Date	Description
1	04/15/22	PERMIT SUBMISSION

REVISION HISTORY

No.	Date	Description

FUGLEBERG KOCH
2555 Temple Trail, Winter Park, FL 32789 (407) 629-0595
www.fuglebergkoch.com AA26002103
CONSULTANT

ASE ENGINEERING SERVICES, INC.
STRUCTURAL DESIGN GROUP
TO THE BEST OF MY KNOWLEDGE, THE BUILDING DESIGN PLANS AND SPECIFICATIONS COMPLY WITH BUILDING STRUCTURAL DESIGN CODE. THE SIGNING AND SEALING OF THE PLANS AND SPECIFICATIONS ARE ONLY FOR THE BUILDING'S STRUCTURAL COMPONENTS AFFECTED BY WIND, LIVE AND DEAD LOADS.
10244 East Colonial Drive, Suite 202
Orlando, Florida 32817 – 407-677-5565 Fax 407-730-2999
Certificate of Authorization No. 25813
Wenyi Hu P.E.
Alabama No. 26652

ALABAMA LICENSED No. 26652 PROFESSIONAL ENGINEER
4/28/2022

Drawn:	CW
Checked:	CW
Approval:	MX
Date:	02-20-22
Project #:	XXX-XXX

THE ROBERT MADISON
MADISON, ALABAMA

SECTION AND DETAILS BLDG TYPES A, B & C

S5.02

PLOTTED:

© 2018 These documents and their contents are the property of FUGLEBERG KOCH - AA26002103, and are issued only for the specific project noted on these drawings. Any reproductions, revisions, or modifications of these documents without the expressed written consent of Fugleberg Koch is prohibited by law.

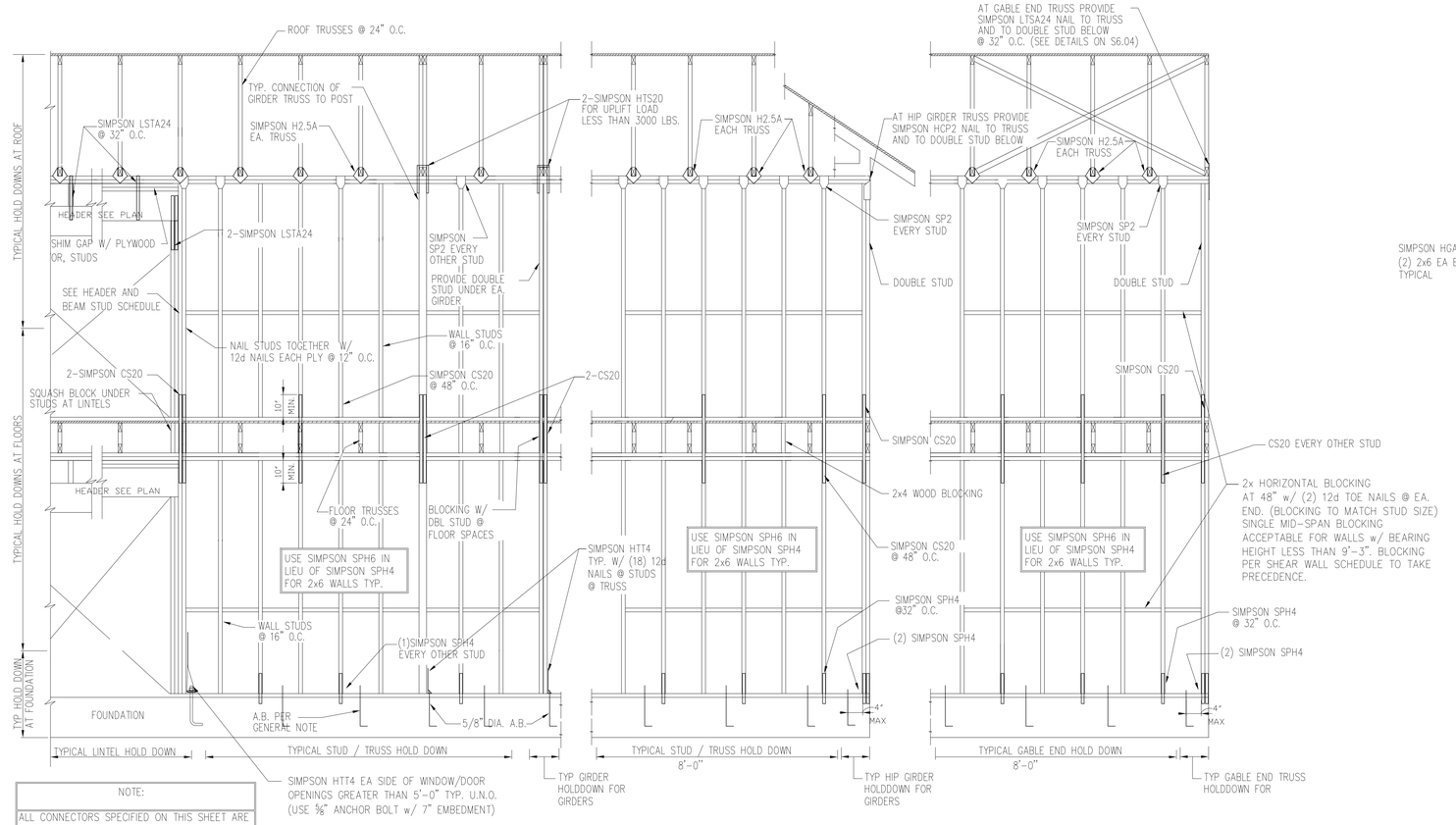

1 TYP. STUD WALL HOLDOWN
SCALE 3/4" = 1'-0"

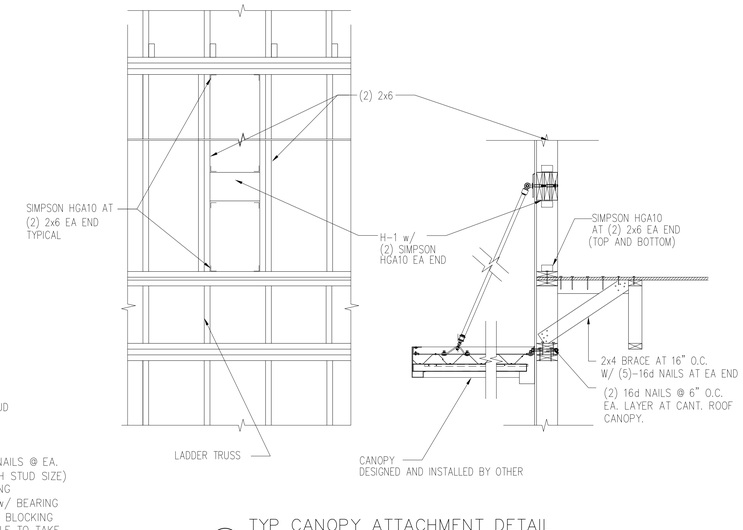

2 TYP CANOPY ATTACHMENT DETAIL
SCALE: N.T.S.

NOTE:

ALL CONNECTORS SPECIFIED ON THIS SHEET ARE SUGGESTED AND MAY BE REPLACED BY OTHER MODELS OR MANUFACTURERS ONLY IF THEY MEET OR EXCEED MIN. UPLIFT REQUIREMENTS DISCRIBED IN PROJECT DOCUMENTS, INCLUDING SHOP DRAWINGS.

ANCHORAGE/STRAPPING FOR ENDS OF SHEAR WALLS IS NOT SHOWN AND IS IN ADDITION TO THAT SHOWN HERE.

MINIMUM WALL AND HEADER STUD REQUIREMENTS

		MAXIMUM HEADER SPAN (FEET)			
		3	6	9	12
		NUMBER OF HEADER STUDS SUPPORTING END OF HEADER			
		1*	2	2	3
UNSUPPORTED WALL HEIGHT	STUD SPACING	NUMBER OF FULL LENGTH STUDS AT EACH END OF HEADER			
10' OR LESS	12"	2	2	3	3
	16"	2	2	3	3
	24"	1	2	2	2
GREATER THAN 10'	12"	2	2	3	4
	16"	2	2	3	3
	24"	1	2	2	2

*THE HEADER STUD SHALL NOT BE REQUIRED IF THE HEADER IS SUPPORTED BY A SUITABLE FRAMING ANCHOR

8 HEADER AND BEAM STUD SCHEDULE
SCALE 3/4" = 1'-0"

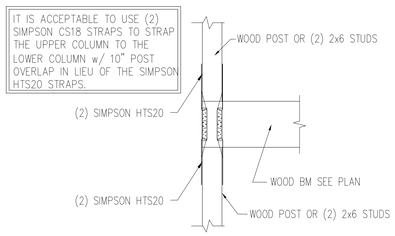

5 SECTION
SCALE 3/4" = 1'-0"

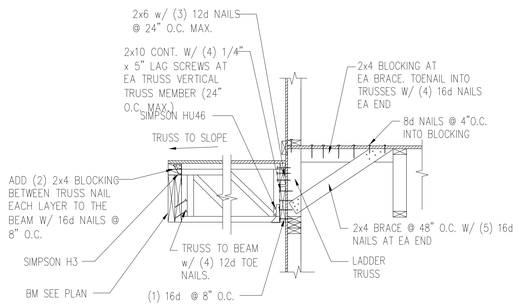

6 SECTION
SCALE: N.T.S.

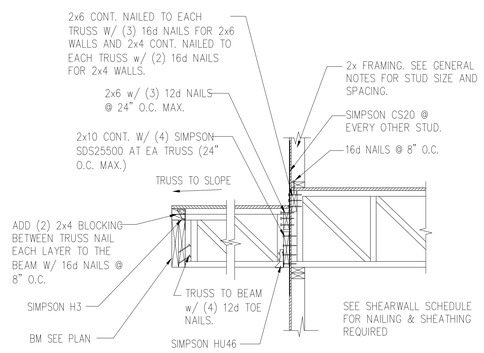

7 SECTION
SCALE 3/4" = 1'-0"

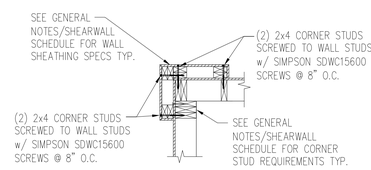

12 OUTSIDE CORNER – PANEL SHADOW BOX
SCALE 3/4" = 1'-0"

NOTES:

1. DO NOT SPLICE TOP PLATES WITHIN 6'-0" OF ENDS OF WOOD STRUCTURAL PANEL SHEAR WALLS.
2. THIS DETAIL APPLIES AT ALL EXTERIOR WALLS AND INTERIOR SHEARWALLS.

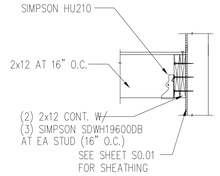

8 SECTION
SCALE 3/4" = 1'-0"

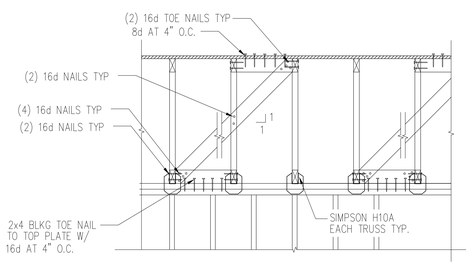

9 TYP. ROOF TRUSS BRACING AT PERPENDICULAR SHEAR WALL
SCALE 3/4" = 1'-0"

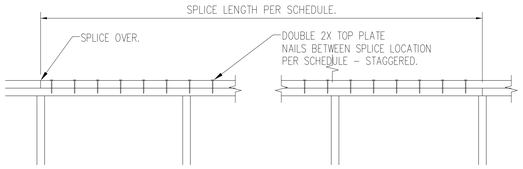

LENGTH OF WALL (BETWEEN CORNERS)	SPLICE LENGTH (MINIMUM)	NAILS ALONG SPLICE LENGTH
OVER 30'	4'-0"	18-16d
OVER 20'	2'-8"	10-16d
OVER 10'	1'-4"	6-16d
LESS THAN 10'	1'-4"	4-16d

10 TYPICAL TOP PLATE SPLICE
SCALE 3/4" = 1'-0"

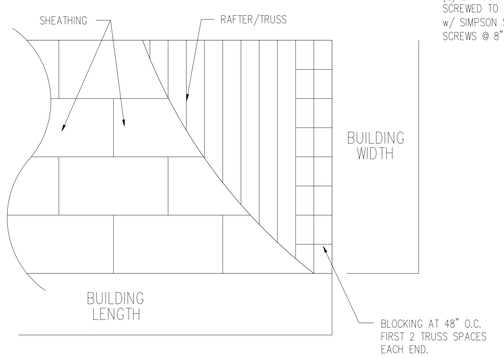

11 ROOF SHEATHING LAYOUT
SCALE N.T.S.

ISSUE HISTORY

No.	Date	Description
1	04/15/22	PERMIT SUBMISSION

REVISION HISTORY

No.	Date	Description

FUGLEBERG KOCH
2555 Temple Trail, Winter Park, FL 32789 (407) 629-0595
www.fuglebergkoch.com AA26002103
CONSULTANT

ASE ENGINEERING SERVICES, INC.
STRUCTURAL DESIGN GROUP
TO THE BEST OF MY KNOWLEDGE, THE BUILDING DESIGN PLANS AND SPECIFICATIONS COMPLY WITH BUILDING STRUCTURAL DESIGN CODE. THE SIGNING AND SEALING OF THE PLANS AND SPECIFICATIONS ARE ONLY FOR THE BUILDING'S STRUCTURAL COMPONENTS AFFECTED BY WIND, LIVE AND DEAD LOADS.
10344 East Colonial Drive, Suite 202
Orlando, Florida 32817 – 407-677-5565 Fax 407-730-2999
Certificate of Authorization No. 25873
Wenyi Hu P.E.
Alabama No. 26652

ALABAMA LICENSED No. 26652 PROFESSIONAL ENGINEER
4/28/2022

THE ROBERT MADISON	Drawn: CW
	Checked: CW
	Approval: MX
MADISON, ALABAMA	Date: 02-20-22
	Project #: XXX-XXX

SECTION AND DETAILS BLDG TYPES A, B & C

S5.03

PLOTTED:

© 2018 These documents and their contents are the property of FUGLEBERG KOCH - AA26002103, and are issued only for the use by the specific project noted on these drawings. Any reproductions, revisions, or modifications of these documents without the expressed written consent of Fugleberg Koch is prohibited by law.

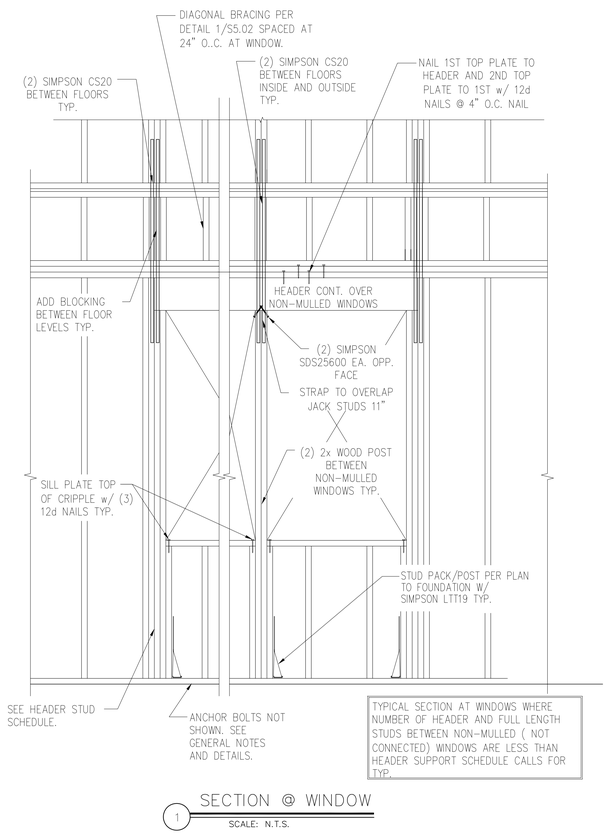

1 SECTION @ WINDOW
SCALE: N.T.S.

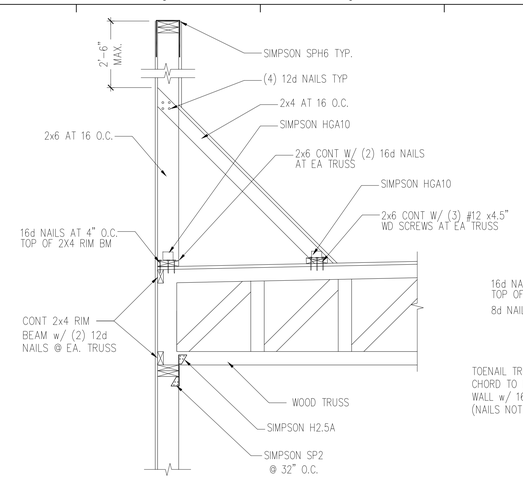

2 SECTION @ ROOF
SCALE: N.T.S.

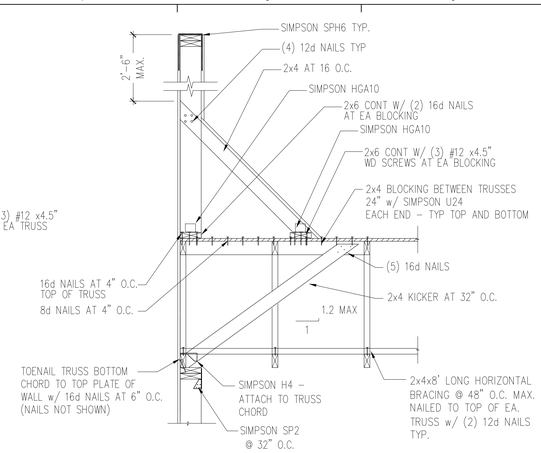

3 TYP GABLE END SECTION
SCALE: N.T.S.

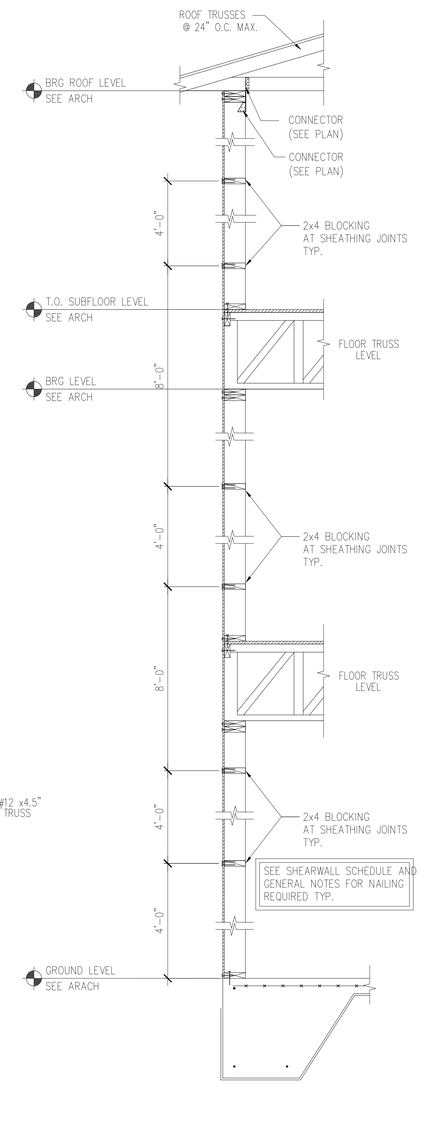

6 TYP. EXT. WALL SHEATHING AND NAILING LAYOUT
SCALE: N.T.S.

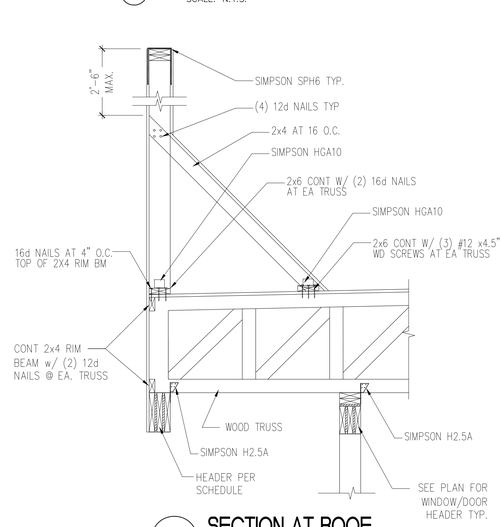

4 SECTION AT ROOF
SCALE: 3/4" = 1'-0"

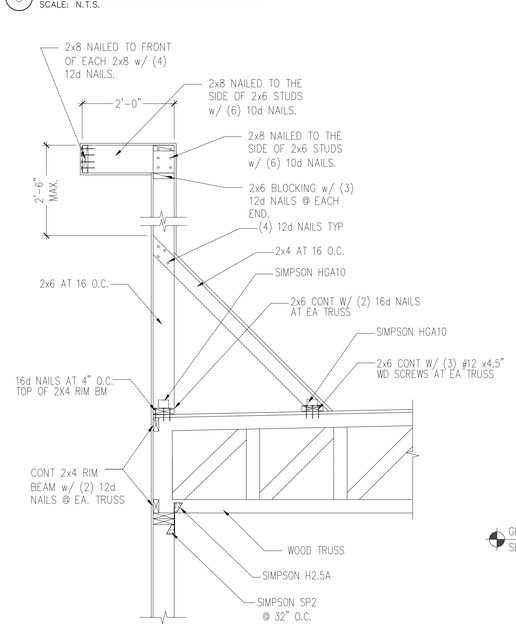

5 SECTION AT ROOF
SCALE: 3/4" = 1'-0"

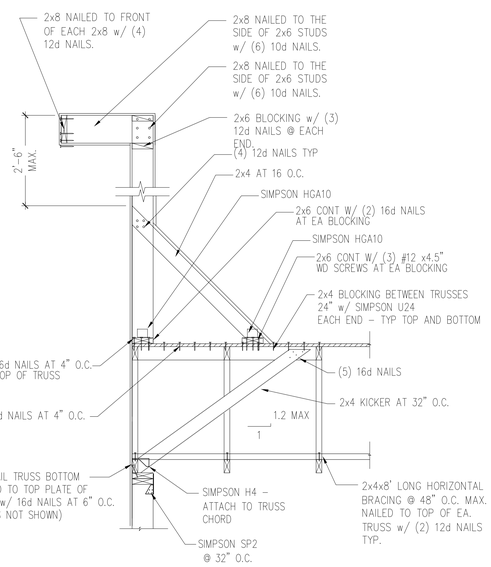

7 TYP GABLE END SECTION
SCALE: N.T.S.

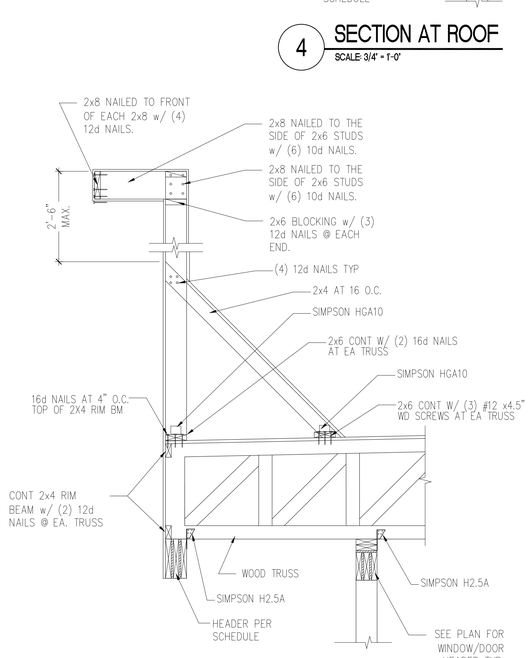

8 SECTION AT ROOF
SCALE: 3/4" = 1'-0"

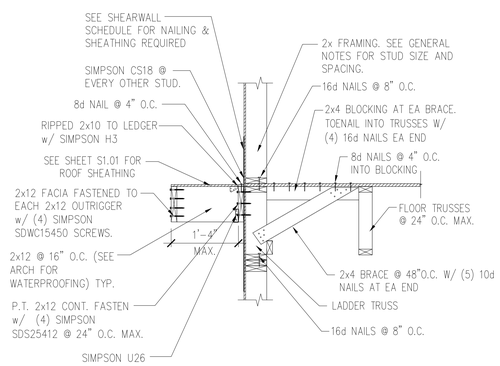

9 SECTION @ EYEBROW
SCALE: 3/4" = 1'-0"

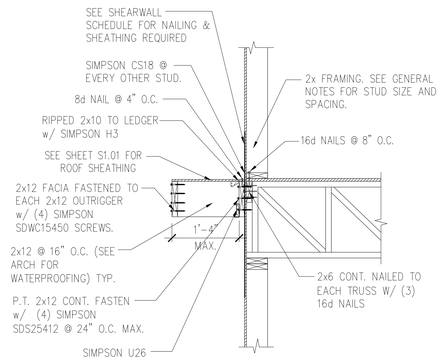

10 SECTION @ EYEBROW
SCALE: 3/4" = 1'-0"

U.S. DEPARTMENT OF HOUSING AND URBAN DEVELOPMENT

ISSUE HISTORY

No.	Date	Description
1	04/15/22	PERMIT SUBMISSION

REVISION HISTORY

No.	Date	Description

© 2018 These documents and their contents are the property of FUGLEBERG KOCH - AA26002103, and are issued only for the project listed on these drawings. Any reproductions, revisions, or modifications of these documents without the expressed written consent of Fugleberg Koch is prohibited by law.

FUGLEBERG KOCH
2555 Temple Trail, Winter Park, FL 32789 (407) 629-0595
www.fuglebergkoch.com AA26002103
CONSULTANT

ASE ENGINEERING SERVICES, INC.
STRUCTURAL DESIGN GROUP
TO THE BEST OF MY KNOWLEDGE, THE BUILDING DESIGN PLANS AND SPECIFICATIONS COMPLY WITH BUILDING STRUCTURAL DESIGN CODE. THE SIGNING AND SEALING OF THE PLANS AND SPECIFICATIONS ARE ONLY FOR THE BUILDING'S STRUCTURAL COMPONENTS AFFECTED BY WIND, LIVE AND DEAD LOADS.
10244 East Colonial Drive, Suite 202
Orlando, Florida 32817 ~ 407-677-5565 Fax 407-730-2999
Certificate of Authorization No. 25813
Wenyi Hu P.E.
Alabama No. 26652

ALABAMA LICENSED No. 26652 PROFESSIONAL ENGINEER
4/28/2022

THE ROBERT MADISON
MADISON, ALABAMA

Drawn:	CW
Checked:	CW
Approval:	MX
Date:	02-20-22
Project #:	XXX-XXX

SECTION AND DETAILS
BLDG TYPES A, B & C

S5.04

PLOTTED:

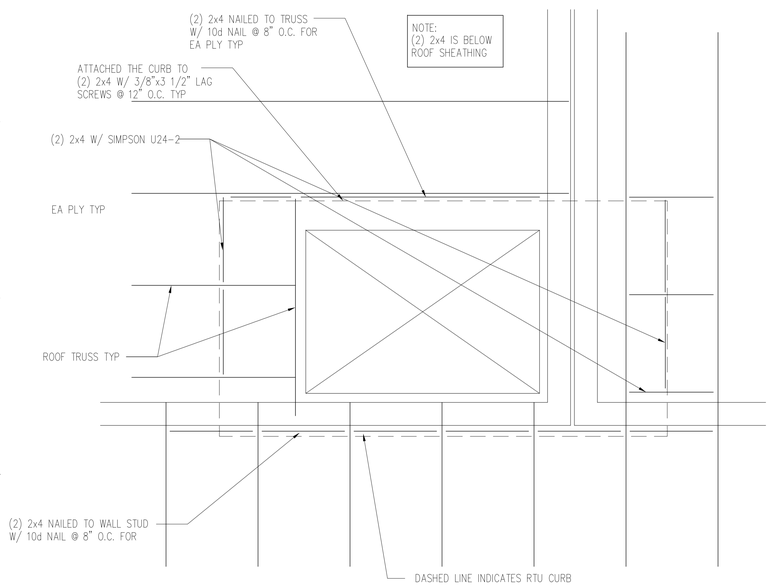

1 TYPICAL RTU ATTACHMENT DETAIL
SCALE: N.T.S.

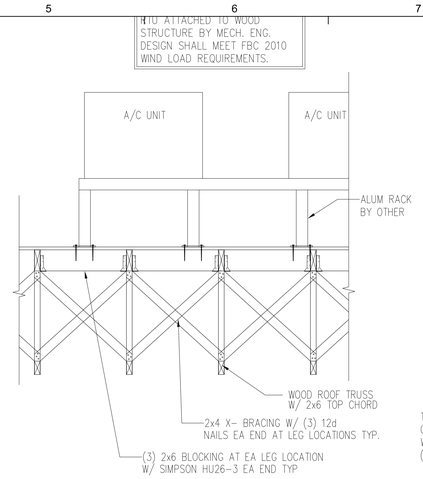

2 SECTION
SCALE: N.T.S.

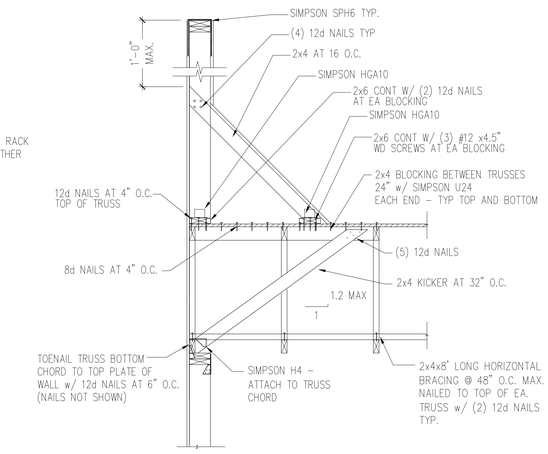

3 TYP GABLE END SECTION
SCALE: N.T.S.

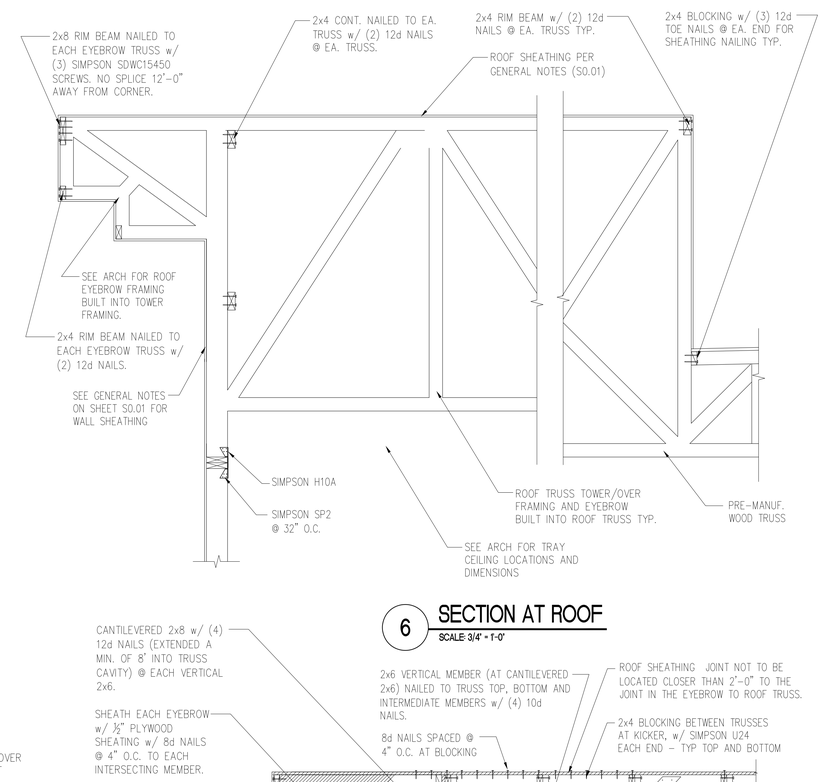

6 SECTION AT ROOF
SCALE: 3/4" = 1'-0"

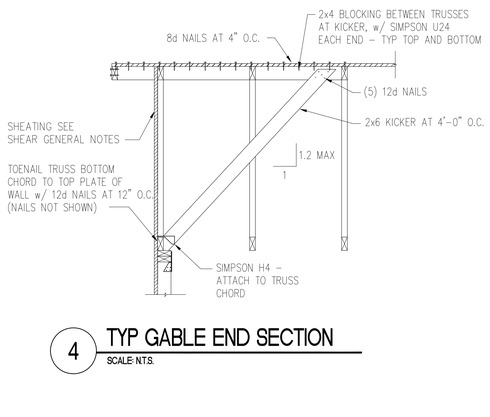

4 TYP GABLE END SECTION
SCALE: N.T.S.

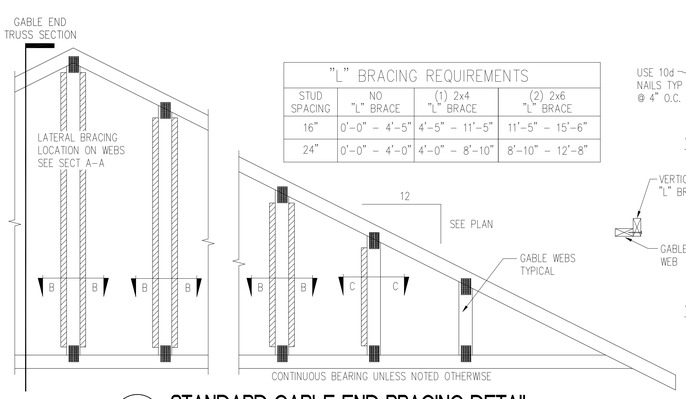

"L" BRACING REQUIREMENTS

STUD SPACING	NO "L" BRACE	(1) 2x4 "L" BRACE	(2) 2x6 "L" BRACE
16"	0'-0" - 4'-5"	4'-5" - 11'-5"	11'-5" - 15'-6"
24"	0'-0" - 4'-0"	4'-0" - 8'-10"	8'-10" - 12'-8"

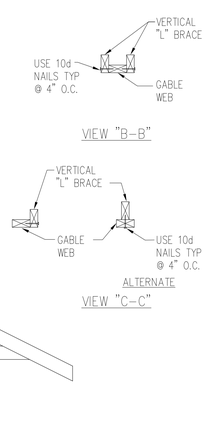

5 STANDARD GABLE END BRACING DETAIL
SCALE: N.T.S.

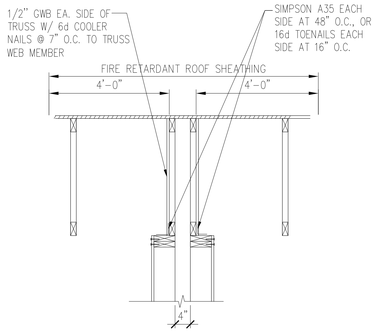

7 PARTY WALL/SHEARWALL SECTION AT ROOF
SCALE: 3/4" = 1'-0"

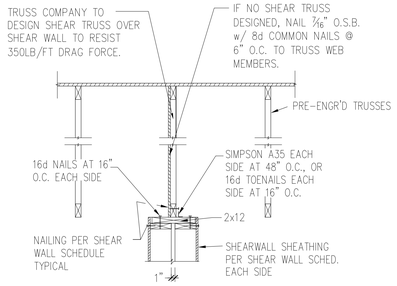

8 PARTY WALL/SHEARWALL SECTION AT ROOF (2x6 WALL)
SCALE: 3/4" = 1'-0"

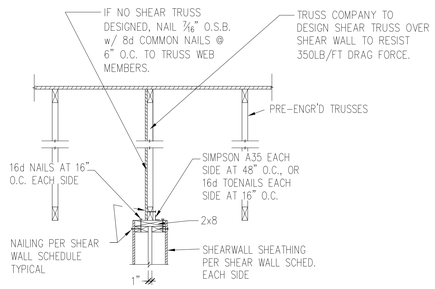

9 PARTY WALL/SHEARWALL SECTION AT ROOF (2x4 WALL)
SCALE: 3/4" = 1'-0"

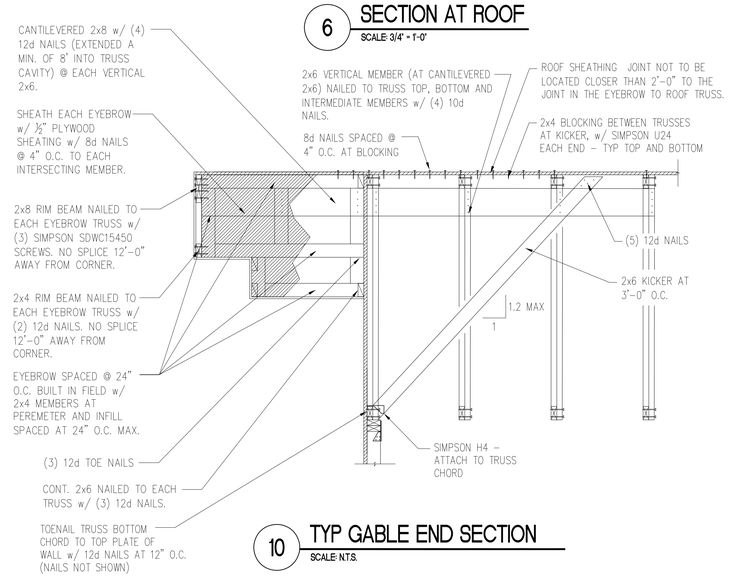

10 TYP GABLE END SECTION
SCALE: N.T.S.

ISSUE HISTORY

No.	Date	Description
1	04/15/22	PERMIT SUBMISSION

REVISION HISTORY

No.	Date	Description

FUGLEBERG KOCH
2555 Temple Trail, Winter Park, FL 32789 (407) 629-0595
www.fuglebergkoch.com AA26002103
CONSULTANT

ASE ENGINEERING SERVICES, INC.
STRUCTURAL DESIGN GROUP
TO THE BEST OF MY KNOWLEDGE THE SUBMITTED PLANS AND SPECIFICATIONS COMPLY WITH THE BUILDING STRUCTURAL DESIGN CODE. THE DESIGN AND SEALING OF THE PLANS AND SPECIFICATIONS ARE ONLY FOR THE BUILDING'S STRUCTURAL COMPONENTS AFFECTED BY WIND, LIVE AND GRAVITY LOADS.
10244 East Colonial Drive, Suite 202
Orlando, Florida 32817 - 407-677-5565 Fax 407-730-2999
Certificate of Authorization No. 25813
Wenyi Hu P.E.
Alabama No. 26652

ALABAMA LICENSED No. 26652 PROFESSIONAL ENGINEER
4/26/2022

THE ROBERT MADISON
MADISON, ALABAMA

Drawn:	CW
Checked:	CW
Approval:	MX
Date:	02-20-22
Project #:	XXX-XXX

SECTION AND DETAILS
BLDG TYPES A, B & C

S5.05

PLOTTED:

© 2016 These documents and their contents are the property of FUGLEBERG KOCH - AA26002103, and are loaned for the specific project noted on these drawings. Any reproductions, revisions, or modifications of these documents without the expressed written consent of Fugleberg Koch is prohibited by law.

U.S. DEPARTMENT OF HOUSING AND URBAN DEVELOPMENT

ABBREVIATIONS

ABV	ABOVE	HWR	HOT WATER RETURN
ADJ	ADJUSTABLE	HWS	HOT WATER SUPPLY
AF	AIRFOIL	HVAC	HEATING VENTILATION AND AIR CONDITIONING
AFF	ABOVE FINISHED FLOOR	HV	HEATING AND VENTILATING
AC	AIR CONDITIONER	IN.WG	INCHES WATER GAUGE
ACU	AIR CONDITIONING UNIT	KW	KILOWATTS
AHU	AIR HANDLING UNIT	LAT	LEAVING DIFFUSER
AP	ACCESS PANEL	LD	LINEAR DIFFUSER
BAS	BUILDING AUTOMATION SYSTEM	LWT	LEAVING WATER TEMPERATURE
BI	BACKWARD INCLINE	MAX	MAXIMUM
BLDG	BUILDING	MBH	1000 X BTUH
BHP	BRAKE HORSEPOWER	MIN	MINIMUM
BTUH	BRITISH THERMAL UNIT PER HOUR	MD	MANUAL VOLUME DAMPER
BDD	BACKDRAFT DAMPER	M	MOTORIZED DAMPER
CD	CONDENSATE DRAIN	MZ	MULTI–ZONE
CFM	CUBIC FEET PER MINUTE	N.T.S.	NOT TO SCALE
CLG	CEILING	OA	OUTSIDE AIR
CHW	CHILLED WATER	OBMVD	OPPOSED BLADE MANUAL VOLUME DAMPER
CHWR	CHILLED WATER RETURN	OPD	OPEN DRIP PROOF
CHWS	CHILLED WATER SUPPLY	PROP	PROPELLER
CWR	CONDENSER WATER RETURN	PCR	PRE–CONDITIONED AIR SYSTEM RETURN WATER
CWS	CONDENSER WATER SUPPLY	PCS	PERCENT
CONC	CONCRETE	PD	PRESSURE DROP
COND	CONDENSATE	PERF. PL.	PERFORATED PLATE
CONT	CONTINUOUS	PLBG	PLUMBING
CO	CARBON MONOXIDE	PSIA	POUNDS PER SQUARE INCH ABSOLUTE
COP	COEFFICIENT OF PERFORMANCE	PSIG	POUNDS PER SQUARE INCH GAUGE
CU	CONDENSING UNIT	RA	RETURN AIR
DB	DRYBULB	RD	RADIATION DAMPER
DWDI	DOUBLE WIDTH, DOUBLE INLET	REG	REGISTER
DWGS	DRAWINGS	REQ'D	REQUIRED
DX	DIRECT EXPANSION	RG	RETURN AIR GRILLE
EF	EXHAUST FAN	RH	RELATIVE HUMIDITY
EXH	EXHAUST	RPM	REVOLUTIONS PER MINUTE
EA	EACH	RR	RETURN AIR REGISTER
EAT	ENTERING AIR TEMPERATURE	RTU	ROOFTOP UNIT
EER	ENERGY EFFICIENCY RATIO	SA	SUPPLY AIR
ELECT	ELECTRICAL	SF	SUPPLY FAN
ENT	ENTERING	SD	SMOKE DETECTOR
EQ	EQUAL	SDMP	SMOKE DAMPER
ER	EXHAUST REGISTER	SQ.FT.	SQUARE FOOT
EWT	ENTERING WATER TEMPERATURE	SR	SUPPLY REGISTER
FC	FORWARD CURVED	STR	STARTER
FCU	FAN COIL UNIT	SWSI	SINGLE WIDTH, SINGLE INLET
FD	FIRE DAMPER	SZ	SINGLE ZONE
FL	FLOOR	TEFC	TOTALLY ENCLOSED FAN COOLED
FLEX	FLEXIBLE CONNECTOR OR DUCT	TEMP	TEMPERATURE
FPM	FEEL PER MINUTE	TG	TRANSFER GRILLE
F/S	COMBINATION FIRE AND SMOKE DAMPER	T/O	TRANSFER OPENING ABOVE CEILING
FT. H_2O	FEET WATER GAUGE	T'STAT	THERMOSTAT
F	DEGREES FAHRENHEIT	TYP	TYPICAL
GA	GAUGE	VFDC	VARIABLE FREQUENCY DRIVE
GAL	GALLON	VAV	VARIABLE AIR VOLUME
GALV	GALVANIZED	VS	VARIABLE SPEED
GPM	GALLONS PER MINUTE	W	WATTS
HP	HORSEPOWER	W/	WITH
HTWR	HIGH TEMPERATURE HOT WATER RETURN	W/O	WITHOUT
HTWS	HIGH TEMPERATURE HOT WATER SUPPLY	WB	WETBULB
HW	HOT WATER	ZD	ZONE DAMPER

GENERAL NOTES

1. INSTALL EQUIPMENT AND MATERIALS IN COMPLIANCE WITH MANUFACTURER'S MINIMUM CLEARANCE REQUIREMENTS AND RECOMMENDATIONS.
2. COMPLY WITH THE LATEST EDITIONS OF NFPA AND THE LATEST ADOPTED EDITION FLORIDA BUILDING CODE (MECHANICAL, PLUMBING, GAS AND ENERGY CONSERVATION).
3. ALL MATERIALS SHALL FIT THE SPACE AVAILABLE. VERIFY DIMENSIONS AND CLEARANCES ON BUILDING PLANS PRIOR TO COMMENCING WORK.
4. AN INDEPENDENT TEST AND BALANCE CONTRACTOR (TABC) SHALL BE HIRED BY THE GENERAL CONTRACTOR.
5. TABC IS RESPONSIBLE FOR TESTING AND BALANCING OF AIR SYSTEMS IN ACCORDANCE WITH AABC GUIDELINES. A TEST AND BALANCE REPORT SHALL BE SUBMITTED TO THE ARCHITECT FOR APPROVAL.
6. PROVIDE 45 DEGREE BRANCH TAKE–OFF PER SMACNA FIG. 2–8 ON ALL RECTANGULAR DUCT TAKE–OFFS.
7. ALL DUCTWORK TAKE–OFFS AND/OR BRANCH DUCTWORK SHALL BE PROVIDED WITH BALANCING DAMPERS (REMOTE IF IN HARD CEILING AREAS).
8. PROVIDE AND INSTALL DUCT MOUNTED HINGED ACCESS DOORS FOR ALL SMOKE AND/OR FIRE DAMPERS, NOT OTHERWISE ACCESSIBLE.
9. CONTRACTOR SHALL COORDINATE VOLTAGE AND PHASE OF EACH PIECE OF EQUIPMENT WITH THE ELECTRICAL CONTRACTOR PRIOR TO ORDERING AND SHALL COORDINATE WITH ALL OTHER TRADES PRIOR TO OR INSTALLING EQUIPMENT AND MATERIALS.
10. COORDINATE ALL HVAC SYSTEM DRAWINGS WITH EXISTING/NEW TRUSS TO AVOID INTERFERENCE BETWEEN MECHANICAL SYSTEMS AND ROOF STRUCTURE. CONTRACTOR SHALL BE RESPONSIBLE FOR ALL COSTS ASSOCIATED WITH TRUSS INTERFERENCE THAT OCCURS IN THE FIELD DURING CONSTRUCTION. COORDINATE IN ADVANCE. DUCT SIZES MAY BE REVISED TO FIT TRUSS SYSTEM SO LONG AS THE EQUIVALENT INSIDE CROSS SECTIONAL AREA IS NOT DECREASED.
11. GAUGES AND CONSTRUCTION FOR DUCTWORK SHALL CONFORM TO THE LATEST EDITION OF SMACNA'S HVAC DUCT CONSTRUCTION STANDARDS.
12. TRANSITION RECTANGULAR DUCTWORK ON BOTTOM AND SIDES. MAINTAIN TOP OF DUCTWORK LEVEL AND HIGH AS POSSIBLE. FLEXIBLE DUCT RUN–OUTS TO CEILING DIFFUSERS SHALL BE AS STRAIGHT AS POSSIBLE AND FREE OF SAGS AND KINKS. FLEX DUCT SHALL BE THE SAME SIZE AS THE DIFFUSER NECK IT SERVES.
13. ALL DUCT TRANSITIONS FROM SQUARE TO ROUND SHALL BE SMOOTH SQUARE TO ROUND TRANSITIONS. SPIN–IN FITTINGS AT THE END OF CAPPED DUCTS ARE NOT ACCEPTABLE. DUCT DIMENSIONS SHOWN ARE INSIDE CLEAR DIMENSIONS.
14. THE CONTRACTOR SHALL FULFILL ALL REQUIREMENTS OF THE CONTRACT DOCUMENTS AND SHALL COMPLETE THE WORK SHOWN ON THESE DRAWINGS. ALL SYSTEMS SHALL BE FINISHED, TESTED AND BALANCED, ADJUSTED, AND PROVEN TO BE FULLY OPERATIONAL AND USEABLE.
15. ADJUST ALL DIFFUSERS IN CORRIDORS OR WITHIN THREE (3) FEET OF A WALL TO PROVIDE 2–WAY OR 3–WAY BLOW AWAY FROM OR PARALLEL TO WALLS. ALL DIFFUSERS SHALL HAVE 4–WAY BLOW UNLESS NOTED OTHERWISE.
16. PORTIONS OF DUCTWORK VISIBLE THROUGH GRILLES AND REGISTERS IN FINISHED AREAS SHALL BE PAINTED FLAT BLACK.
17. ALL DAMPERS IN AND ABOVE CEILING SHALL BE ACCESSIBLE. CONTRACTOR SHALL COORDINATE ALL ACCESS PANELS IN CEILINGS OR WALLS WITH ARCHITECTURAL REFLECTED CEILING PLANS AND INTERIOR DRAWINGS FOR PROPER LOCATION.
18. MOUNT THERMOSTATS WHERE INDICATED ON PLANS 48" ABOVE FINISHED FLOOR UNLESS NOTED OTHERWISE. IN HANDICAPPED ACCESSIBLE AREAS, MOUNT CONTROLS AT 48" (MAXIMUM) ABOVE FINISHED FLOOR.
19. COORDINATE DUCTWORK AND PIPING WITH PLUMBING, FIRE PROTECTION AND ELECTRICAL. MAKE OFFSETS AND TRANSITIONS TO COORDINATE WITH OTHER TRADES WITHOUT ANY ADDITIONAL EXPENSE TO THE CONTRACT.
20. SEAL ALL TRANSVERSE JOINTS AND FITTINGS WITH DUCT SEALER.
21. TRAP AND ROUTE CONDENSATE DRAINS LINES, FULL SIZE OF UNIT CONNECTION, AS INDICATED. SLOPE 1/8" PER FOOT.
22. ALTERNATE MANUFACTURERS AND MODELS WILL BE REVIEWED. THERE MAY BE ARCHITECTURAL, STRUCTURAL AND ELECTRICAL CHANGES RESULTING FROM THE ALTERNATES. THE COST OF IMPLEMENTING AND ENGINEERING THESE CHANGES SHALL BE BORNE BY THE MECHANICAL SUBCONTRACTOR.
23. PIPE AND DUCT ROUTING SHOWN IS SCHEMATIC. PROVIDE ANY ADDITIONAL OFFSETS AND FITTINGS, INCLUDING DIVIDED DUCTS, REQUIRED FOR PROPER INSTALLATION AND TO MAINTAIN CLEARANCES AS ENCOUNTERED IN THE FIELD.
24. COORDINATE CEILING MOUNTED AIR DEVICE LOCATION WITH REFLECTED CEILING PLAN AND OTHER TRADES.
25. ALL CONTROL WIRING AND CONDUIT SHALL COMPLY WITH NEC DIVISION 16 SPECIFICATIONS.
26. PROVIDE MATERIALS WHICH HAVE A FLAME SPREAD RATING OF 25 OR LESS AND A SMOKE DEVELOPED RATING OF 50 OR LESS WHEN TESTED IN ACCORD WITH ASTM E84.
27. SLEEVE AND FIRE STOP PENETRATIONS THROUGH FIRE RATED SYSTEMS TO MAINTAIN RATING OF SYSTEM. USE MINIMUM GALVANIZED STEEL GAUGE DUCT AS REQUIRED TO MAINTAIN RATING OF SYSTEM.
28. WHERE THE EXHAUST DUCT IS CONCEALED WITHIN THE BUILDING CONSTRUCTION, THE EQUIVALENT LENGTH OF THE DUCT SHALL BE IDENTIFIED ON A PERMANENT LABEL OR TAG. THE LABEL OR TAG SHALL BE LOCATED WITHIN 6 FEET OF THE EXHAUST DUCT CONNECTION.
29. CONTRACTOR TO ORDER ALL FIRE/SMOKE DAMPERS WITH INTEGRAL SMOKE DETECTORS AND END STOP INDICATOR OPTIONS. VERIFY VOLTAGE WITH ELECTRICAL DRAWINGS. IF BUILDING IS EQUIPPED WITH FIRE ALARM SYSTEM ALL FIRE/SMOKE DAMPERS WILL BE CONNECTED TO BUILDING FIRE ALARM SYSTEM.
30. ALL MECHANICAL EQUIPMENT SHALL BE THOROUGHLY CLEANED OF ALL DIRT, OIL, CONCRETE, ETC. ANY DENTS, SCRATCHES OR OTHER VISIBLE BLEMISHES SHALL BE CORRECTED AND THE APPEARANCE OF THE EQUIPMENT MADE "LIKE NEW" AND TO THE SATISFACTION OF THE ARCHITECT/ENGINEER. UPON COMPLETION, AND BEFORE FINAL ACCEPTANCE OF THE WORK, ALL DEBRIS, RUBBISH, LEFTOVER MATERIALS, TOOLS AND EQUIPMENT SHALL BE REMOVED FROM THE SITE. PROTECTION OF WORK UNTIL FINAL ACCEPTANCE: PROTECT ALL MATERIALS AND EQUIPMENT FROM DAMAGE, ENTRANCE OF DIRT AND CONSTRUCTION DEBRIS FROM THE TIME OF INSTALLATION UNTIL FINAL ACCEPTANCE. ANY MATERIALS AND EQUIPMENT WHICH ARE DAMAGED SHALL BE REPAIRED TO "AS NEW" CONDITION OR REPLACED AT THE DIRECTION OF THE ARCHITECT/ENGINEER. WHERE FACTORY FINISHES OCCUR AND DAMAGE IS MINOR, FINISHES MAY BE TOUCHED UP. IF, IN THE OPINION OF THE ARCHITECT/ENGINEER THE DAMAGE IS EXCESSIVE, FACTORY FINISH SHALL BE REPLACED TO "NEW" CONDITION.
31. DRAWINGS ARE DIAGRAMMATIC AND INDICATE THE GENERAL ARRANGEMENT AND EXTENT OF WORK. EXACT LOCATIONS AND ARRANGEMENT OF MATERIALS AND EQUIPMENT SHALL BE DETERMINED, WITH THE ACCEPTANCE OF THE ARCHITECT/ENGINEER, AS WORK PROGRESSES TO CONFORM IN THE BEST POSSIBLE MANNER WITH THE SURROUNDINGS AND WITH THE ADJOINING WORK OF OTHER TRADES. WHERE LOCATIONS OF EQUIPMENT, DEVICES OR FIXTURES ARE CONTROLLED BY ARCHITECTURAL FEATURES, ESTABLISH SUCH LOCATIONS BY REFERRING TO DIMENSIONS ON ARCHITECTURAL DRAWINGS AND NOT BY SCALING DRAWINGS.
32. IN CASE OF DIFFERENCES BETWEEN DRAWINGS AND SPECIFICATIONS, OR WHERE DRAWINGS AND SPECIFICATIONS ARE NOT CLEAR OR DEFINITE, THE SUBJECT SHALL BE REFERRED TO ARCHITECT/ENGINEER FOR CLARIFICATION AND INSTRUCTIONS.
33. ANY INTERRUPTION OF EXISTING MECHANICAL AND ELECTRICAL SERVICES SHALL BE COORDINATED IN ADVANCE WITH THE OWNER'S REPRESENTATIVE. THIS INCLUDES, BUT IS NOT LIMITED TO, SERVICES PROVIDING CHILLED WATER, ELECTRICITY, OR OTHER CRITICAL SYSTEMS AS MAY BE PERTINENT TO THIS PARTICULAR PROJECT. SERVICE INTERRUPTION TIMES AND DURATION OF INTERRUPTION OF SERVICES SHALL BE DECIDED BY THE OWNER. PROVIDE APPROPRIATE PROVISIONS (SUCH AS ISOLATION SHUT–OFF VALVES, DAMPERS, END CAPS, AND SIMILAR ITEMS) AS NECESSARY TO ACCOMMODATE THE REQUIRED SERVICE INTERRUPTIONS. IF SHUTDOWNS CANNOT BE ACCOMMODATED, PROVIDE MEANS FOR "WET" TAPPING OR "HOT" TAPPING OF PIPING SYSTEMS.
34. ALL MAIN DUCTWORK SHOWN PER PLAN IS TO BE SHEET METAL OR DUCT BOARD. ALL DUCT BOARD INSTALLATIONS ARE TO BE APPROVED BY BUILDING OWNER PRIOR TO MATERIAL PURCHASE.
35. FIRE & FIRE/SMOKE DAMPERS ARE REQUIRED TO BE UL LISTED AND APPROVED FOR THE ASSEMBLIES LISTED ON THE ARCHITECTURAL DRAWINGS. THESE DAMPERS MUST ALSO BE REVIEWED AND APPROVED BY THE ARCHITECT PRIOR TO ORDERING.

ENERGY CALCULATION VALUES

ROOF:	R–38
WALLS:	R–21
WINDOWS:	
SHGC:	0.25
U VALUE:	U–0.30
VLT:	0.5
DOORS:	R–2.85
FLOORS:	R–10

NOTE:

THIS PROJECT HAS MET THE MINIMUM ENERGY CODE REQUIREMENTS AND HAS BEEN DESIGNED TO THE MINIMUM VALUES NOTED. ALL MATERIALS USED IN THE CONSTRUCTION OF THIS PROJECT MUST MEET OR EXCEED THE MINIMUM VALUES NOTED PER THE LATEST ADOPTED EDITION OF THE FLORIDA BUILDING CODE AND FLORIDA ENERGY CODE.

NOTE:

GENERAL NOTES ON THIS MECHANICAL SHEET ARE FOR GENERAL REFERENCE PURPOSES ONLY. ALL OF THESE NOTES MAY NOT BE USED FOR THIS PROJECT.

LEGEND

Symbol	Description
	SUPPLY DIFFUSER (4–WAY)
	RETURN OR OUTDOOR AIR GRILLE
	EXHAUST GRILLE
	SUPPLY DUCT UP SECTION (RECTANGULAR)
	RETURN DUCT UP SECTION (RECTANGULAR)
	EXHAUST DUCT UP SECTION (RECTANGULAR)
	SUPPLY DUCT DOWN SECTION (RECTANGULAR)
	RETURN DUCT DOWN SECTION (RECTANGULAR)
	EXHAUST DUCT DOWN SECTION (RECTANGULAR)
	SUPPLY DUCT UP SECTION (ROUND)
	SUPPLY DUCT DOWN SECTION (ROUND)
	LINEAR SLOT DIFFUSER
	EXISTING LINEAR SLOT DIFFUSER (LIGHT LINETYPE)
A/B	RECTANGULAR DUCTWORK WITH TAKE–OFF, BALANCING DAMPER AND INSULATED FLEXIBLE ROUND DUCT. SAME SIZE AS DIFFUSER INLET UNLESS NOTED OTHERWISE. FIRST DIMENSION IS THAT OF SIDE SHOWN
A ø	ROUND DUCTWORK
	CONICAL FITTING WITH DAMPER ON BRANCH CONNECTION TO RECTANGULAR MAIN (PROVIDE DAMPER IN LOW PRESSURE DUCTWORK ONLY)
	EXISTING DUCTWORK TO REMAIN (LIGHT LINETYPE)
R	DUCT OFFSETS UP (RISE) IN DIRECTION INDICATED
D	DUCT OFFSETS DOWN (DROP) IN DIRECTION INDICATED
	OPPOSED BLADE VOLUME DAMPER (OBD)
	MANUAL DAMPER
	FLEXIBLE DUCT CONNECTION
	FIRE/RADIATION DAMPER WITH ACCESS PANEL
	COMBINATION FIRE/SMOKE DAMPER WITH ACCESS PANEL
	EXISTING DUCTWORK TO BE REMOVED (DASHED LINETYPE)
SD	DUCT MOUNTED SMOKE DETECTOR PROVIDED AND WIRED BY ELECTRICAL CONTRACTOR AND INSTALLED IN DUCT BY MECHANICAL CONTRACTOR. REFER TO SPECIFICATIONS FOR CONTROL REQUIREMENTS.
A–100	AIR DEVICE TAG MARK–CFM
	SIDEWALL TRANSFER GRILLE
	SIDEWALL SUPPLY REGISTER
	SIDEWALL RETURN GRILLE OR OUTSIDE AIR LOUVER
	SIDEWALL EXHAUST GRILLE
TS	WALL MOUNTED DDC TEMPERATURE SENSOR MOUNT 4'–0" ABOVE FINISHED FLOOR
T	WALL MOUNTED THERMOSTAT MOUNT 4'–0" ABOVE FINISHED FLOOR
C	WALL MOUNTED CO SENSOR MOUNT 4'–0" ABOVE FINISHED FLOOR
H	WALL MOUNTED DDC HUMIDITY SENSOR MOUNT 4'–0" ABOVE FINISHED FLOOR
H S	WALL MOUNTED HUMIDISTAT SENSOR MOUNT 4'–0" ABOVE FINISHED FLOOR
A / B	PHOTO DETAIL OR SECTION IDENTIFICATION TARGET A = DETAIL NUMBER B = SHEET NUMBER ON WHICH DETAIL IS LOCATED
RD	RADIATION DAMPER INSTALLED IN AIR DEVICE
RD	RADIATION DAMPER INSTALLED IN DUCT
	ELBOW WITH TURNING VANES

Symbol	Description
X	REFERENCE NOTES
X	REFERENCE NOTE – MULTI–DISCIPLINE SHEETS
	FLOW DIRECTION
	INDICATES POINT OF CONNECTION BETWEEN NEW AND EXISTING
	POINT OF DISCONNECT
CWS	CONDENSER WATER SUPPLY PIPING
CWR	CONDENSER WATER RETURN PIPING
BCWS	BUILDING CONDENSER WATER SUPPLY PIPING
BCWR	BUILDING CONDENSER WATER RETURN PIPING
CHWS	CHILLED WATER SUPPLY PIPING
CHWR	CHILLED WATER RETURN PIPING
HWS	HEATING WATER SUPPLY PIPING
HWR	HEATING WATER RETURN PIPING
CD	CONDENSATE DRAIN PIPING
R	REFRIGERANT PIPING
FS	FLOW SENSOR
SP	STATIC PRESSURE TRANSMITTER ASSEMBLY
L=1/4W, MIN. 4" / L / 45° / W	RECTANGULAR BRANCH DUCT CONNECTION. (PROVIDE BALANCING DAMPER AT ALL BRANCH CONNECTIONS)
	TEE (PLAN, UP, DOWN)
	ELBOW (PLAN, UP, DOWN)
	VALVE
	TWO WAY MOTORIZED CONTROL VALVE
	THREE WAY MOTORIZED CONTROL VALVE
	PRESSURE REDUCING VALVE
	FLOW CONTROL VALVE
	BALL VALVE FOR PIPING 2–INCHES AND SMALLER, BUTTERFLY VALVE FOR PIPING 2–1/2 INCHES AND LARGER
	BUTTERFLY VALVE
	CHECK VALVE
	STRAINER
	BALANCE VALVE WITH INTEGRAL TAPS FOR CONNECTION OF DIFFERENTIAL PRESSURE METER. VALVE SHALL HAVE NAMEPLATE INDICATING WATER FLOW RATE VERSUS VALVE PRESSURE DROP
A	AUTOMATIC FLOW CONTROL VALVE WITH INTEGRAL TEMPERATURE AND PRESSURE TEST PORTS
	UNION
	VENTURI FLOW METER
	PRESSURE AND/OR TEMPERATURE PORT
	THERMOMETER
	PRESSURE GAUGE WITH GAUGE COCK
	FLEXIBLE CONNECTION
	PRESSURE RELIEF VALVE
	OPENING IN WALL ABOVE CEILING
AHU 3 (EQUIPMENT TYPE / MARK)	EQUIPMENT TAG
UC	1" DOOR UNDER CUT. ARROW INDICATES DIRECTION OF FLOW
	FLEX DUCT

NOTE:

SYMBOLS SHOWN ON THIS MECHANICAL LEGEND ARE FOR REFERENCE PURPOSES ONLY. ALL OF THESE SYMBOLS MAY NOT BE USED FOR THIS PROJECT.

ISSUE HISTORY

No.	Date	Description
1	04/15/22	Permit Submission

REVISION HISTORY

No.	Date	Description

FUGLEBERG KOCH

2555 Temple Trail, Winter Park, FL 32789 (407) 629-0595
www. fuglebergkoch.com AA26002103

CONSULTANT

Joseph, Lawrence & Co
Consulting Engineers
1180 HARWOOD AVE. SUITE 3000
ALTAMONTE SPRINGS, FLORIDA 32714
TEL: 321.972.4466
WWW.JLCENG.COM
CA NO. 4050 - E

JLC 22.0023.00

ALABAMA LICENSED No. 33858 PROFESSIONAL ENGINEER ADAM J. BARNEY

THE MADISON

HUNTSVILLE, AL

Drawn:	MJR/SMB
Checked:	BLS/AJB
Approval:	BLS/AJB
Date:	04/15/2022
Project #:	5722

SYMBOL LEGEND & GENERAL NOTES MECHANICAL

M0.01

© 2018 These documents and their contents are the property of FUGLEBERG KOCH - AA26002103, and are issued only for the specific project noted on these drawings. Any reproductions, revisions, or modifications of these documents without the expressed written consent of Fugleberg Koch is prohibited by law.

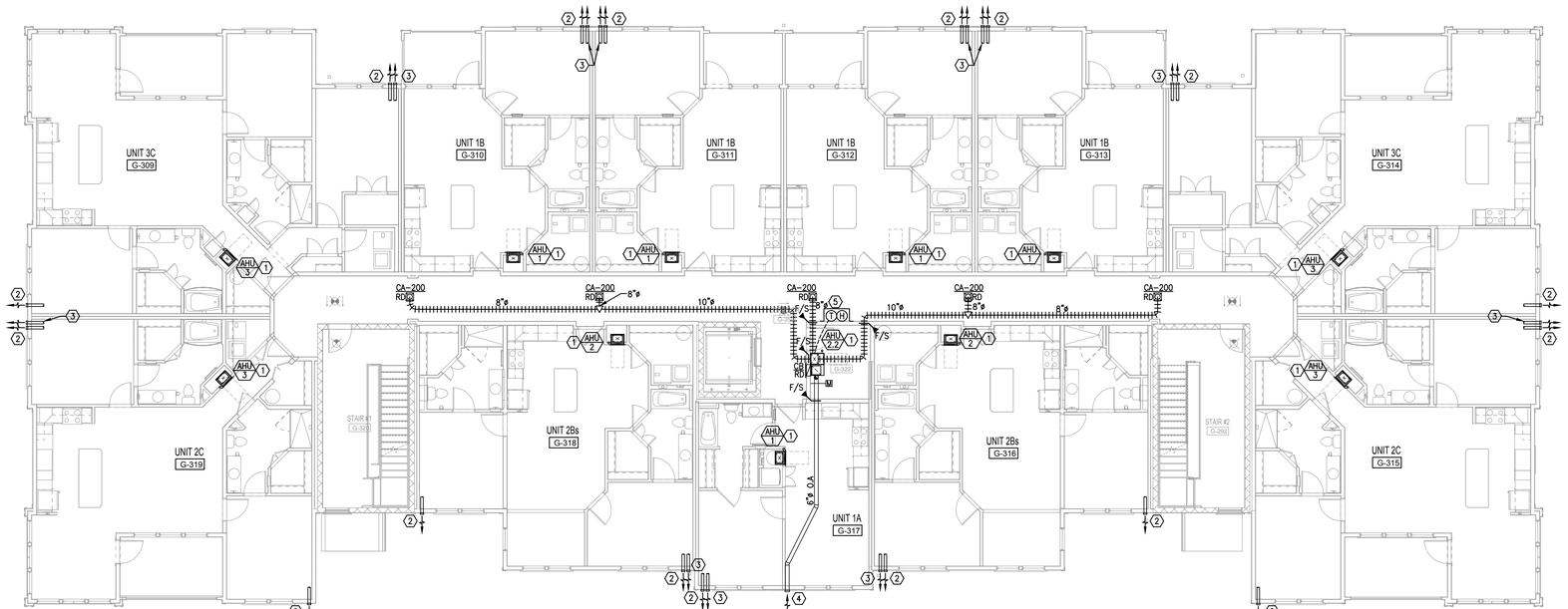

F1 BUILDING TYPE B - 2ND LEVEL - MECHANICAL
1/8" = 1'-0"

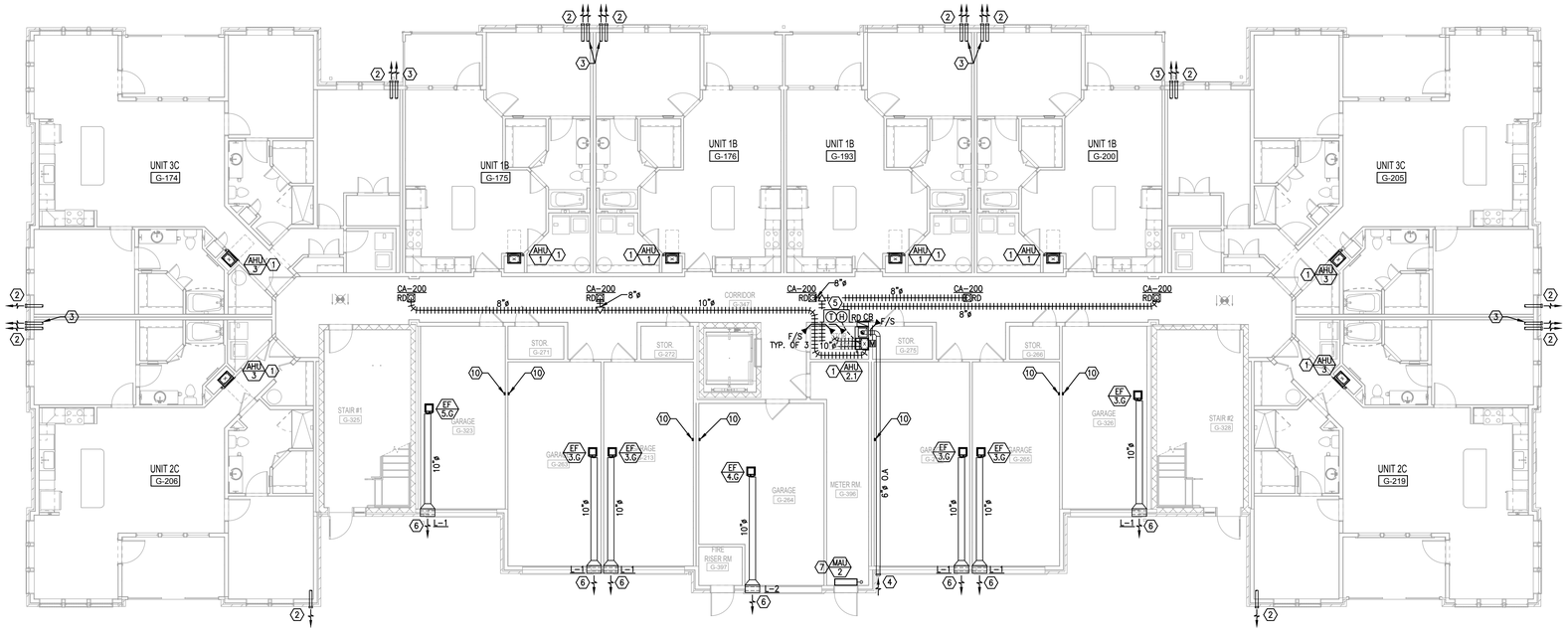

K1 BUILDING TYPE B - GROUND LEVEL - MECHANICAL
1/8" = 1'-0"

GENERAL NOTES:

1. ALL EXHAUST OUTLETS SHALL BE FARTHER THAN 3 FEET AWAY FROM ANY OPERABLE WINDOWS.
2. INSTALL CONDENSING UNIT ON HOUSEKEEPING PAD PER DETAIL. CONDENSING UNITS TO BE INSTALLED WITH REQUIRED MANUFACTURER CLEARANCE. REFER TO OVERALL SITE PLAN FOR PROPOSED CONDENSING UNIT LOCATIONS BASED ON BUILDING SITE LOCATION.

REFERENCE NOTES: ⓧ

1. MOUNT AHU PER DETAIL AND ROUTE REFRIGERANT LINES WITHIN MECHANICAL CLOSET WALL DOWN THRU FLOOR AND UNDER SLAB TO GROUND MOUNTED CONDENSING UNIT. SEE PLUMBING PLANS FOR CONDENSATE DISPOSAL. ROUTE REFRIGERANT LINES PER DETAIL.
2. ROUTE TOILET EXHAUST DUCT FROM WALL MOUNTED EXHAUST FAN THROUGH TRUSS SPACE TO BUILDING SIDEWALL. TERMINATE DUCT AT EXTERIOR WALL CAP WITH BIRD SCREEN PER RISER DIAGRAM. PRIME COAT AND PAINT WALL CAP TO MATCH BUILDING COLOR. SEE INDIVIDUAL UNIT PLANS FOR CONTINUATION.
3. ROUTE DRYER EXHAUST DUCT THROUGH TRUSS SPACE TO BUILDING SIDEWALL. TERMINATE DUCT AT EXTERIOR WALL CAP (NO BIRD SCREEN) PER RISER DIAGRAM. PRIME COAT AND PAINT WALL CAP TO MATCH BUILDING COLOR. SEE INDIVIDUAL UNIT PLAN FOR CONTINUATION.
4. OUTSIDE AIR DUCT. ROUTE UP TO TRUSS SPACE AND ROUTE TO EXTERIOR WALL CAP. PRIME COAT AND PAINT WALL CAP TO MATCH ADJACENT SURFACES. OUTSIDE AIR DUCT SHALL BE LOCATED A MINIMUM OF 10 FEET AWAY FROM ANY DISCHARGE AIR. PROVIDE WITH INTEGRAL BIRD SCREEN.
5. PROVIDE NEW FULLY DIGITAL 7 DAY PROGRAMMABLE TYPE THERMOSTAT/HUMIDISTAT WITH AUTO CHANGE OVER AND AUTO SET BACK. MOUNT THERMOSTAT IN MECHANICAL ROOM. MOUNT TEMPERATURE SENSOR IN CORRIDOR 48" ABOVE FINISHED FLOOR. PROVIDE WITH CLEAR ACRYLIC LOCKING COVER.
6. ROUTE EXHAUST DUCT FROM CEILING MOUNTED EXHAUST FANS THROUGH TRUSS SPACE TO BUILDING SIDEWALL. TERMINATE DUCT AT EXTERIOR WALL LOUVRE. PRIME COAT AND PAINT WALL CAP TO MATCH BUILDING COLOR.
7. MOUNT MAU IN METER ROOM ABOVE DOOR. ROUTE REFRIGERANT LINES IN WALL DOWN THRU FLOOR(S) AND UNDER SLAB TO CONDENSING UNIT. ROUTE CONDENSATE DRAIN LINE DOWN WALL AND OUT TO GRASSY AREA PER DETAIL. PROVIDE CONDENSATE PUMP EQUAL TO BLUEDIAMOND X87-721 IF REQUIRED. CONDENSATE PUMP MUST BE ACCESSIBLE.
8. ROUTE REFRIGERANT LINES FROM GROUND MOUNTED CONDENSING UNITS UNDER SLAB AND UP INTERIOR WALL TO AIR HANDLERS ON 2ND, 3RD AND 4TH FLOORS.
9. INSTALL CONDENSING UNIT AND HOUSEKEEPING PAD PER DETAIL. COORDINATE CONDENSING UNIT LOCATIONS WITH OWNER.
10. PROVIDE HARD WIRED 120V CARBON MONOXIDE MONITOR EQUAL TO FIRST ALERT.

U.S. DEPARTMENT OF HOUSING AND URBAN DEVELOPMENT

ISSUE HISTORY

No.	Date	Description
1	04/15/22	Permit Submission

REVISION HISTORY

No.	Date	Description

FUGLEBERG KOCH
2555 Temple Trail, Winter Park, FL 32789 (407) 629-0595
www. fuglebergkoch.com AA26002103

CONSULTANT
Joseph, Lawrence & Co
Consulting Engineers
1180 HARWOOD AVE. SUITE 3000
ALTAMONTE SPRINGS, FLORIDA 32714
TEL: 321.972.4466
WWW.JLCENG.COM
CA NO. 4050 - E

JLC 22.0023.00

A. B. BARNES No. 53886 PROFESSIONAL ENGINEER STATE OF FLORIDA

THE MADISON	Drawn: MJR/SMB
	Checked: BLS/AJB
	Approval: BLS/AJB
HUNTSVILLE, AL	Date: 04/15/2022
	Project #: 5722

BUILDING TYPE B
GROUND & 2ND LEVEL
MECHANICAL

M2.04

© 2015 These documents and their contents are the property of FUGLEBERG KOCH - ARCHITECTS, and are to be used only for the specific project for which they were prepared by them. Any reproduction, reuse, or modification of these documents without the expressed written consent of Fugleberg Koch is prohibited by law.

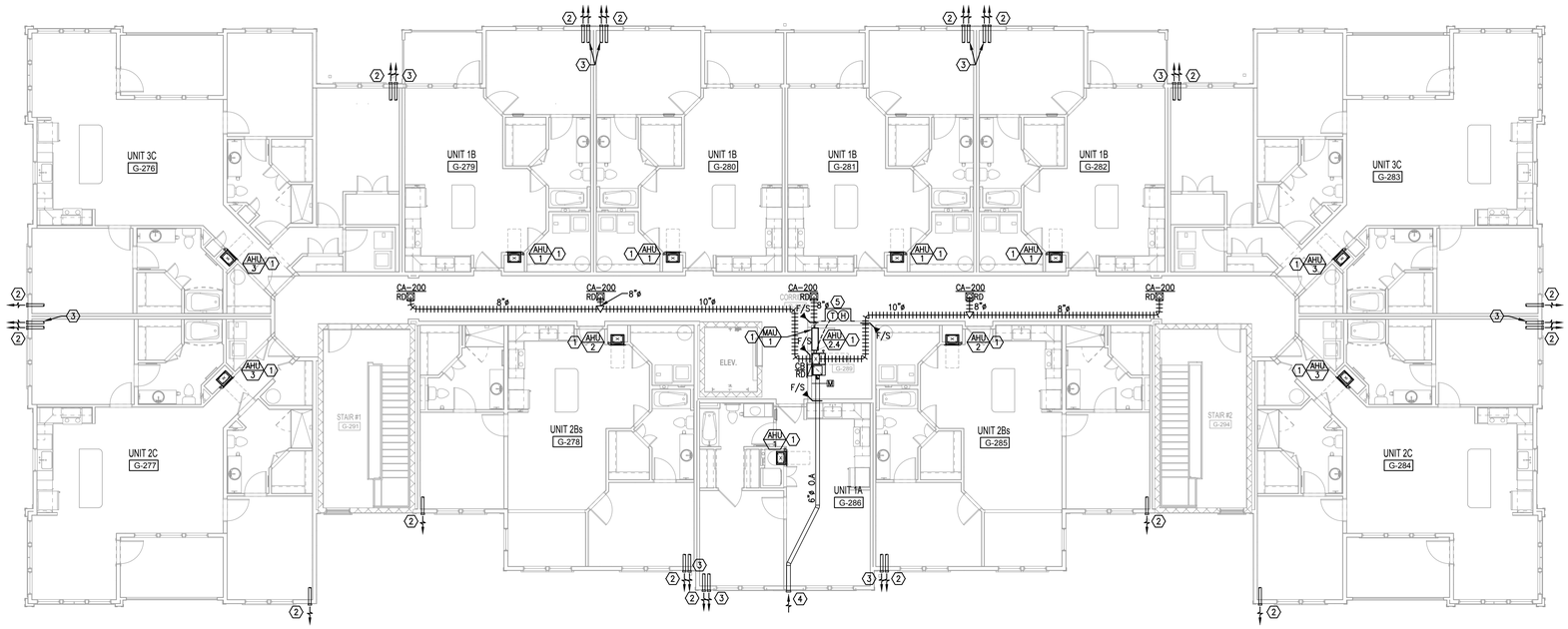

F1 BUILDING TYPE B - 4TH LEVEL - MECHANICAL
1/8" = 1'-0"

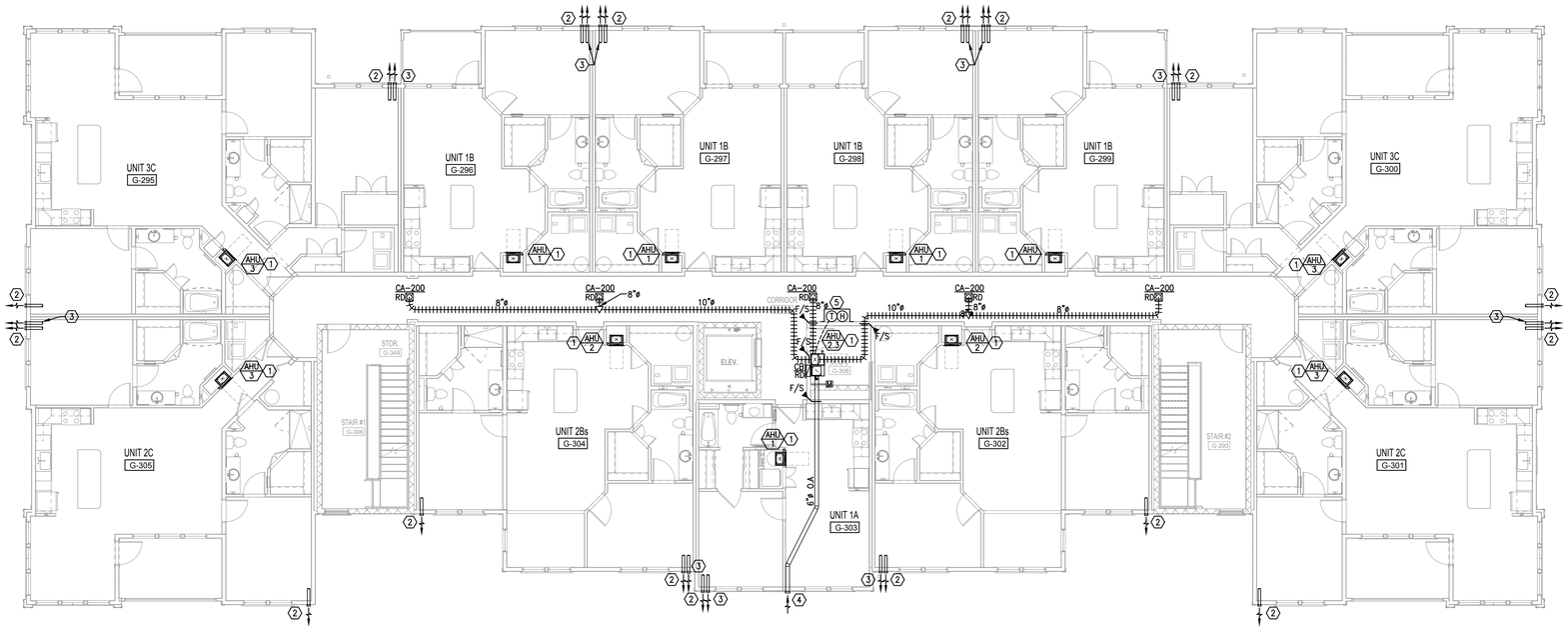

K1 BUILDING TYPE B - 3RD LEVEL - MECHANICAL
1/8" = 1'-0"

GENERAL NOTES:

1. ALL EXHAUST OUTLETS SHALL BE FARTHER THAN 3 FEET AWAY FROM ANY OPERABLE WINDOWS.
2. INSTALL CONDENSING UNIT ON HOUSEKEEPING PAD PER DETAIL. CONDENSING UNITS TO BE INSTALLED WITH REQUIRED MANUFACTURER CLEARANCE. REFER TO OVERALL SITE PLAN FOR PROPOSED CONDENSING UNIT LOCATIONS BASED ON BUILDING SITE LOCATION.

REFERENCE NOTES: ⓧ

1. MOUNT AHU PER DETAIL AND ROUTE REFRIGERANT LINES WITHIN MECHANICAL CLOSET WALL DOWN THRU FLOOR AND UNDER SLAB TO GROUND MOUNTED CONDENSING UNIT. SEE PLUMBING PLANS FOR CONDENSATE DISPOSAL. ROUTE REFRIGERANT LINES PER DETAIL.
2. ROUTE TOILET EXHAUST DUCT FROM WALL MOUNTED EXHAUST FAN THROUGH TRUSS SPACE TO BUILDING SIDEWALL. TERMINATE DUCT AT EXTERIOR WALL CAP WITH BIRD SCREEN PER RISER DIAGRAM. PRIME COAT AND PAINT WALL CAP TO MATCH BUILDING COLOR. SEE INDIVIDUAL UNIT PLANS FOR CONTINUATION.
3. ROUTE DRYER EXHAUST DUCT THROUGH TRUSS SPACE TO BUILDING SIDEWALL. TERMINATE DUCT AT EXTERIOR WALL CAP (NO BIRD SCREEN) PER RISER DIAGRAM. PRIME COAT AND PAINT WALL CAP TO MATCH BUILDING COLOR. SEE INDIVIDUAL UNIT PLAN FOR CONTINUATION.
4. OUTSIDE AIR DUCT. ROUTE UP TO TRUSS SPACE AND ROUTE TO EXTERIOR WALL CAP. PRIME COAT AND PAINT WALL CAP TO MATCH ADJACENT SURFACES. OUTSIDE AIR DUCT SHALL BE LOCATED A MINIMUM OF 10 FEET AWAY FROM ANY DISCHARGE AIR. PROVIDE WITH INTEGRAL BIRD SCREEN.
5. PROVIDE NEW FULLY DIGITAL 7 DAY PROGRAMMABLE TYPE THERMOSTAT/HUMIDISTAT WITH AUTO CHANGE OVER AND AUTO SET BACK. MOUNT THERMOSTAT IN MECHANICAL ROOM. MOUNT TEMPERATURE SENSOR IN CORRIDOR 48" ABOVE FINISHED FLOOR. PROVIDE WITH CLEAR ACRYLIC LOCKING COVER.
6. MOUNT MAU IN ELEC/IT ROOM ABOVE DOOR. ROUTE REFRIGERANT LINES IN WALL DOWN THRU FLOOR(S) AND UNDER SLAB TO CONDENSING UNIT. ROUTE CONDENSATE DRAIN LINE DOWN WALL AND OUT TO GRASSY AREA PER DETAIL. PROVIDE CONDENSATE PUMP EQUAL TO BLUEDIAMOND X87-721 IF REQUIRED. CONDENSATE PUMP MUST BE ACCESSIBLE.

U.S. DEPARTMENT OF HOUSING AND URBAN DEVELOPMENT

ISSUE HISTORY

No.	Date	Description
1	04/15/22	Permit Submission

REVISION HISTORY

No.	Date	Description

© 2015 These documents and their contents are the property of FUGLEBERG KOCH - AA26002103, and are loaned only for the specific project for which they are prepared. Any reproduction, reuse, or modification of these documents without the expressed written consent of Fugleberg Koch is prohibited by law.

FUGLEBERG KOCH
2555 Temple Trail, Winter Park, FL 32789 (407) 629-0595
www.fuglebergkoch.com AA26002103

CONSULTANT
Joseph, Lawrence & Co
Consulting Engineers
1180 HARWOOD AVE. SUITE 3000
ALTAMONTE SPRINGS, FLORIDA 32714
TEL: 321.972.4466
WWW.JLCENG.COM
CA NO. 4050 - E

JLC 22.0023.00

A. B. BARNES No. 53886 PROFESSIONAL ENGINEER STATE OF FLORIDA

Drawn:	MJR/SMB
Checked:	BLS/AJB
Approval:	BLS/AJB
Date:	04/15/2022
Project #	5722

THE MADISON
HUNTSVILLE, AL

BUILDING TYPE B
3RD & 4TH LEVEL
MECHANICAL

M2.05

GENERAL NOTES:

A. INSTALLATION OF EQUIPMENT SHALL COMPLY WITH EQUIPMENT MANUFACTURER'S INSTALLATION AND CLEARANCE REQUIREMENTS.

B. CONTRACTOR IS RESPONSIBLE FOR PROVIDING ALL EQUIPMENT AND ACCESSORIES FOR HVAC EQUIPMENT. THIS CONTRACTOR SHALL VERIFY ALL EQUIPMENT REQUIREMENT AND QUANTITIES PRIOR TO BID.

REFERENCE NOTES: ⟨X⟩

1. MOUNT NEW CONDENSING UNITS TO NEW ROOF MOUNTED RAIL SYSTEM PER DETAIL.
2. PROVIDE REFRIGERANT LINE ROOF PENETRATION COVER PER DETAIL.
3. SUPPORT REFRIGERANT PIPING ABOVE ROOF SURFACE PER DETAIL.

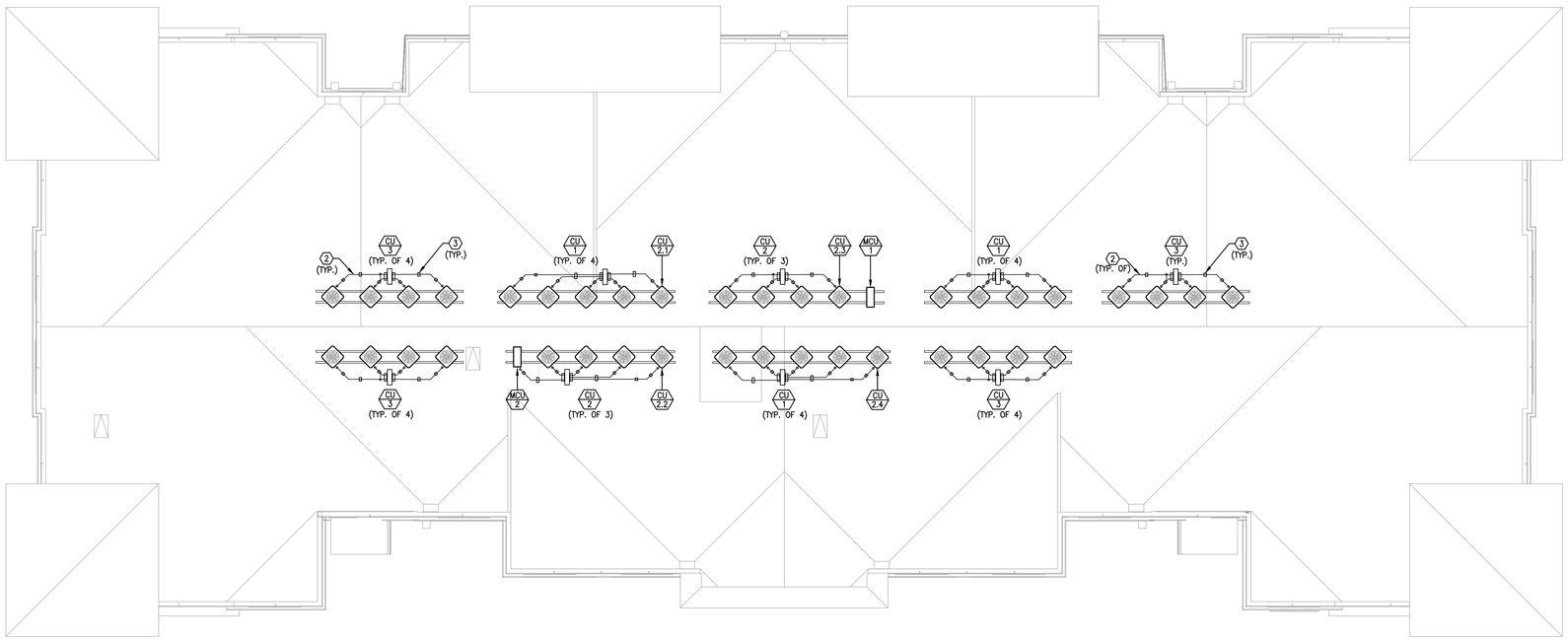

K1 BUILDING TYPE B - ROOF PLAN - MECHANICAL
1/8" = 1'-0"

U.S. DEPARTMENT OF HOUSING AND URBAN DEVELOPMENT

ISSUE HISTORY

No.	Date	Description
1	04/15/22	Permit Submission

REVISION HISTORY

No.	Date	Description

FUGLEBERG KOCH
2555 Temple Trail, Winter Park, FL 32789 (407) 629-0595
www. fuglebergkoch.com AA26002103

CONSULTANT
Joseph, Lawrence & Co
Consulting Engineers
1180 HARWOOD AVE. SUITE 3000
ALTAMONTE SPRINGS, FLORIDA 32714
TEL: 321.972.4466
WWW.JLCENG.COM
CA NO. 4050 - E

JLC 22.0023.00

A. B. BARNES
No. 53886
PROFESSIONAL
LICENSED
STATE OF FLORIDA
A. B. BARNES

Drawn:	MJR/SMB
Checked:	BLS/AJB
Approval:	BLS/AJB
Date:	04/15/2022
Project #	5722

THE MADISON
HUNTSVILLE, AL

BUILDING TYPE B
ROOF PLAN
MECHANICAL

M2.06

© 2015 These documents and their contents are the property of FUGLEBERG KOCH - ARCHITECTS, and are loaned only for the specific project noted on these drawings. Any reproduction, revisions, or modifications of these documents without the expressed written consent of Fugleberg Koch is prohibited by law.

NATURAL VENTILATION CALC.	
UNIT 1A	
UNIT FLOOR AREA:	538
MIN. VENTILATION AREA: (UNIT AREA * 4%)	21.52
ACTUAL VENTILATION AREA: (OPERABLE OPENING AREA)	52

NATURAL VENTILATION CALCULATIONS BASED ON FLORIDA MECHANICAL CODE CHAPTER 4, SECTION 402.

PER FMC SECTION 401.2 NATURAL VENTILATION IS BEING PROVIDED TO THE DWELLING UNIT THROUGH OPERABLE WINDOWS AND DOORS. THE ADJOINING KITCHEN SPACE COMMUNICATES DIRECTLY WITH THE LIVING NATURALLY VENTILATED LIVING SPACE PER FMC SECTION 402.3 THEREBY NO MECHANICAL EXHAUST IS REQUIRED FOR THE KITCHEN.

ALL AREAS CALCULATED IN SQUARE FEET

DRYER VENT LENGTH CALC.	
UNIT 1A	
HORIZONTAL LENGTH:	21.71
VERTICAL LENGTH:	7
90° (5 FT EACH):	10
45° (2.5 FT EACH):	0
TOTAL EQ. LENGTH (FT):	38.71

THIS DRYER VENT TOTAL EQUIVALENT LENGTH EXCEEDS THE CODE MAXIMUM OF 35 FEET, ANY CLOTHES DRYER CONNECTED TO THE DRYER EXHAUST SYSTEM IS REQUIRED TO HAVE A MANUFACTURER'S SERVICE RATING THAT MEETS OR EXCEEDS THE OVERALL DRYER VENT LENGTH OF THIS SYSTEM AS CALCULATED PER THE DRYER MANUFACTURER REQUIREMENTS.

MECHANICAL CONTRACTOR TO PROVIDE PERMANENTLY AFFIXED LABEL IDENTIFYING THE TOTAL EQUIVALENT LENGTH OF THE UNIT DRYER EXHAUST SYSTEM AS LISTED ABOVE WITHIN 6 FEET OF THE DRYER EXHAUST DUCTWORK CONNECTION STATING "THIS DRYER VENT IS 38.71' LONG AND REQUIRES A DRYER CAPABLE OF MEETING THIS DRYER VENT LENGTH".

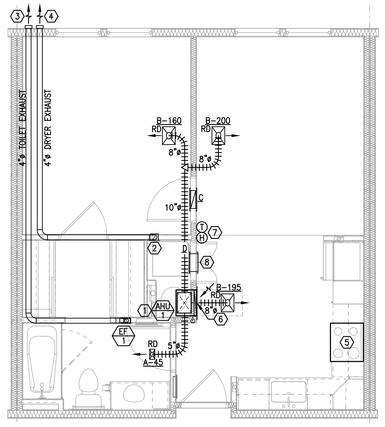

G5 UNIT 1A - MECHANICAL
1/4" = 1'-0"

GENERAL NOTES:

1. PROVIDE 1" DOOR UNDER CUT IN ALL BEDROOMS IN ADDITION TO TRANSFER GRILLE.
2. ALL EXHAUST OUTLETS SHALL BE FARTHER THAN 3 FEET AWAY FROM ANY OPERABLE WINDOWS.
3. DUCT SYSTEMS ARE TO BE SEALED WITH TAPE COMPLYING WITH UL 181, MASTIC GASKETS, OR AN APPROVED SYSTEM AS REQUIRED BY THE ICC IRC, SECTION M1601.3.1 OR ICC IMC, SECTION 603.9 TO REDUCE LEAKAGE.
4. ALL MATERIALS INSTALLED WITHIN PLENUM RETURN CLOSET SHALL BE ASTM E-84 25/50 FIRE/SMOKE RATED OR BE WRAPPED WITH ASTM E-84 25/50 FIRE/SMOKE RATED MATERIAL. USE PLENUM RATED FIELD WIRING EQUAL TO SOUTHWIRE WITHIN AHU CLOSET. FULLY INSULATE EXPOSED SCHEDULE 40 PVC PIPING WITH 3M FIRE BARRIER PLENUM WRAP 5A+ OR EQUAL.
5. EXHAUST VENT DUCTWORK TO BE INSTALLED WITH A $\frac{1}{4}$" SLOPE TOWARD OUTLETS FOR THE FIRST 5'-0". EXHAUST DUCTWORK TO BE INSTALLED WITH LONGITUDINAL SEAMS FACING UPWARD FOR THE ENTIRE LENGTH OF THE DUCTWORK.

REFERENCE NOTES: (X)

1. MOUNT AHU PER DETAIL AND ROUTE REFRIGERANT LINES WITHIN MECHANICAL CLOSET WALL DOWN TO 1ST FLOOR AND UNDER SLAB TO GROUND MOUNTED CONDENSING UNIT. SEE PLUMBING PLANS FOR CONDENSATE DISPOSAL. ROUTE REFRIGERANT LINES PER RISER DIAGRAM.
2. INSTALL DRYER EXHAUST WALL CONNECTION BOX PER DETAIL.
3. ROUTE 4"ø EXHAUST DUCT FROM WALL MOUNTED EXHAUST FAN THROUGH TRUSS SPACE TO BUILDING SIDEWALL PER DETAIL. TERMINATE DUCT AT EXTERIOR WALL CAP PER RISER DIAGRAM.
4. ROUTE 4"ø DRYER EXHAUST DUCT THROUGH TRUSS SPACE TO BUILDING SIDEWALL PER DETAIL. TERMINATE DUCT AT EXTERIOR WALL CAP (NO BIRD SCREEN) PER RISER DIAGRAM.
5. MICROWAVE WITH DUCTLESS HOOD.
6. PROVIDE FACTORY PANEL FOR RETURN AIR AND SERVICE ACCESS.
7. PROVIDE HONEYWELL VISIONPRO 8000 TOUCHSCREEN 7-DAY PROGRAMMABLE THERMOSTAT OR EQUAL.
8. PROVIDE LOUVER ABOVE DOOR TO THE LAUNDRY CLOSET FOR DRYER MAKE-UP AIR.

UL ASSEMBLY REQUIREMENTS:

INSTALL LOWER FLOOR DUCTS IN THE L-500 FLOOR TRUSS SYSTEM. FOLLOW THE REQUIREMENTS OF THE UL LISTING FOR THE L-500 SYSTEM.

INSTALL TOP FLOOR DUCTS IN THE P-500 ROOF TRUSS SYSTEM. FOLLOW THE REQUIREMENTS OF THE UL LISTING FOR THE P-500 SYSTEM.

1. PROVIDE CEILING RADIATION DAMPERS AT ALL SUPPLY AND TRANSFER DUCTS AND REGISTER PENETRATIONS.
2. MAXIMUM DAMPER SIZE OF 324 SQUARE INCHES (18X18) AND NO MORE THAN 162 SQUARE INCHES PER 100 SF OF CEILING AREA.
3. MAINTAIN 1" BETWEEN DAMPERS AND TRUSSES.
4. PROVIDE MINIMUM 2" SEPARATION BETWEEN DAMPERS.
5. INSTALL ONLY RADIATION DAMPERS THAT ARE UL LISTED FOR THE ASSEMBLY IN WHICH THEY ARE INTENDED.

BLOWER DOOR TESTING REQUIREMENTS

PER FLORIDA ENERGY EFFICIENCY CODE SECTION R402.4 ALL APARTMENT UNITS LOCATED WITHIN BUILDINGS THAT ARE 3 STORIES OR LESS ARE REQUIRED TO BE LEAK TESTED WITH A MAXIMUM LEAK RATE OF NO GREATER THAN 7 AIR CHANGES PER HOUR. IF LEAK TESTING RESULTS SHOW A LEAK RATE HIGHER THAN 7 AIR CHANGES PER HOUR THE UNIT THERMAL ENVELOPE MUST BE SEALED ACCORDINGLY AND RE-TESTED. A PASSING CERTIFIED BLOWER DOOR TEST REPORT MUST BE SUPPLIED TO THE AUTHORITY HAVING JURISDICTION PRIOR TO CERTIFICATE OF OCCUPANCY.

PER FLORIDA MECHANICAL CODE SECTION 401.2 IF THE UNIT LEAK RATE IS FOUND TO BE LESS THAN 3 AIR CHANGES PER HOUR DEDICATED MECHANICAL VENTILATION WILL BE REQUIRED TO BE INSTALLED.

**DOES NOT APPLY TO BUILDINGS 4 STORIES OR GREATER*

U.S. DEPARTMENT OF HOUSING AND URBAN DEVELOPMENT

ISSUE HISTORY

No.	Date	Description
1	04/15/22	Permit Submission

REVISION HISTORY

No.	Date	Description

FUGLEBERG KOCH
2555 Temple Trail, Winter Park, FL 32789 (407) 629-9595
www. fuglebergkoch.com AA26002103

CONSULTANT

Joseph, Lawrence & Co
Consulting Engineers
1180 HARWOOD AVE SUITE 3000
ALTAMONTE SPRINGS, FLORIDA 32714
TEL. 321.972.4466
WWW.JLCENG.COM
CA NO. 4050 - E

JLC 22.0023.00

STATE OF FLORIDA BRIAN L. SMITH LICENSE No. 73885 PROFESSIONAL ENGINEER

Drawn:	MJR/SMB
Checked:	BLS/AJB
Approval:	BLS/AJB
Date:	04/15/2022
Project #	5722

THE MADISON

HUNTSVILLE, AL

ENLARGED UNIT PLANS MECHANICAL

M3.01

© 2019 These documents and their contents are the property of FUGLEBERG KOCH - ADDRESSED, and are loaned to the owner for the specific project shown. Any reproduction, re-use, or modification of these documents without the expressed written consent of Fugleberg Koch is prohibited by law.

NATURAL VENTILATION CALC.	
UNIT 1B	
UNIT FLOOR AREA:	719
MIN. VENTILATION AREA: (UNIT AREA * 4%)	28.76
ACTUAL VENTILATION AREA: (OPERABLE OPENING AREA)	73

NATURAL VENTILATION CALCULATIONS BASED ON FLORIDA MECHANICAL CODE CHAPTER 4, SECTION 402.

PER FMC SECTION 401.2 NATURAL VENTILATION IS BEING PROVIDED TO THE DWELLING UNIT THROUGH OPERABLE WINDOWS AND DOORS. THE ADJOINING KITCHEN SPACE COMMUNICATES DIRECTLY WITH THE LIVING NATURALLY VENTILATED LIVING SPACE PER FMC SECTION 402.3 THEREBY NO MECHANICAL EXHAUST IS REQUIRED FOR THE KITCHEN.

ALL AREAS CALCULATED IN SQUARE FEET

DRYER VENT LENGTH CALC.	
UNIT 1B	
HORIZONTAL LENGTH:	26.54
VERTICAL LENGTH:	7
90° (5 FT EACH):	10
45° (2.5 FT EACH):	0
TOTAL EQ. LENGTH (FT):	43.54

THIS DRYER VENT TOTAL EQUIVALENT LENGTH EXCEEDS THE CODE MAXIMUM OF 35 FEET, ANY CLOTHES DRYER CONNECTED TO THE DRYER EXHAUST SYSTEM IS REQUIRED TO HAVE A MANUFACTURER'S SERVICE RATING THAT MEETS OR EXCEEDS THE OVERALL DRYER VENT LENGTH OF THIS SYSTEM AS CALCULATED PER THE DRYER MANUFACTURER REQUIREMENTS.

MECHANICAL CONTRACTOR TO PROVIDE PERMANENTLY AFFIXED LABEL IDENTIFYING THE TOTAL EQUIVALENT LENGTH OF THE UNIT DRYER EXHAUST SYSTEM AS LISTED ABOVE WITHIN 6 FEET OF THE DRYER EXHAUST DUCTWORK CONNECTION STATING "THIS DRYER VENT IS 43.54' LONG AND REQUIRES A DRYER CAPABLE OF MEETING THIS DRYER VENT LENGTH".

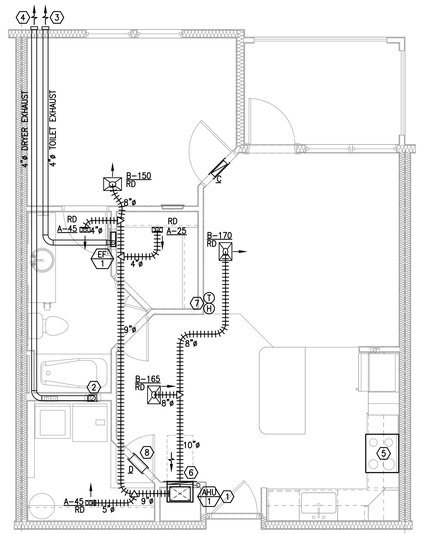

G5 UNIT 1B - MECHANICAL
1/4" = 1'-0"

GENERAL NOTES:

1. PROVIDE 1" DOOR UNDER CUT IN ALL BEDROOMS IN ADDITION TO TRANSFER GRILLE.
2. ALL EXHAUST OUTLETS SHALL BE FARTHER THAN 3 FEET AWAY FROM ANY OPERABLE WINDOWS.
3. DUCT SYSTEMS ARE TO BE SEALED WITH TAPE COMPLYING WITH UL 181, MASTIC GASKETS, OR AN APPROVED SYSTEM AS REQUIRED BY THE ICC IRC, SECTION M1601.3.1 OR ICC IMC, SECTION 603.9 TO REDUCE LEAKAGE.
4. ALL MATERIALS INSTALLED WITHIN PLENUM RETURN CLOSET SHALL BE ASTM E-84 25/50 FIRE/SMOKE RATED OR BE WRAPPED WITH ASTM E-84 25/50 FIRE/SMOKE RATED MATERIAL. USE PLENUM RATED FIELD WIRING EQUAL TO SOUTHWIRE WITHIN AHU CLOSET. FULLY INSULATE EXPOSED SCHEDULE 40 PVC PIPING WITH 3M FIRE BARRIER PLENUM WRAP 5A+ OR EQUAL.
5. EXHAUST VENT DUCTWORK TO BE INSTALLED WITH A $\frac{1}{4}$" SLOPE TOWARD OUTLETS FOR THE FIRST 5'-0". EXHAUST DUCTWORK TO BE INSTALLED WITH LONGITUDINAL SEAMS FACING UPWARD FOR THE ENTIRE LENGTH OF THE DUCTWORK.

REFERENCE NOTES: (X)

1. MOUNT AHU PER DETAIL AND ROUTE REFRIGERANT LINES WITHIN MECHANICAL CLOSET WALL DOWN TO 1ST FLOOR AND UNDER SLAB TO GROUND MOUNTED CONDENSING UNIT. SEE PLUMBING PLANS FOR CONDENSATE DISPOSAL. ROUTE REFRIGERANT LINES PER RISER DIAGRAM.
2. INSTALL DRYER EXHAUST WALL CONNECTION BOX PER DETAIL.
3. ROUTE 4"ø EXHAUST DUCT FROM WALL MOUNTED EXHAUST FAN THROUGH TRUSS SPACE TO BUILDING SIDEWALL PER DETAIL. TERMINATE DUCT AT EXTERIOR WALL CAP PER RISER DIAGRAM.
4. ROUTE 4"ø DRYER EXHAUST DUCT THROUGH TRUSS SPACE TO BUILDING SIDEWALL PER DETAIL. TERMINATE DUCT AT EXTERIOR WALL CAP (NO BIRD SCREEN) PER RISER DIAGRAM.
5. MICROWAVE WITH DUCTLESS HOOD.
6. PROVIDE FACTORY PANEL FOR RETURN AIR AND SERVICE ACCESS.
7. PROVIDE HONEYWELL VISIONPRO 8000 TOUCHSCREEN 7-DAY PROGRAMMABLE THERMOSTAT OR EQUAL.
8. PROVIDE LOUVER ABOVE DOOR TO THE LAUNDRY CLOSET FOR DRYER MAKE-UP AIR.

UL ASSEMBLY REQUIREMENTS:

INSTALL LOWER FLOOR DUCTS IN THE L-500 FLOOR TRUSS SYSTEM. FOLLOW THE REQUIREMENTS OF THE UL LISTING FOR THE L-500 SYSTEM.

INSTALL TOP FLOOR DUCTS IN THE P-500 ROOF TRUSS SYSTEM. FOLLOW THE REQUIREMENTS OF THE UL LISTING FOR THE P-500 SYSTEM.

1. PROVIDE CEILING RADIATION DAMPERS AT ALL SUPPLY AND TRANSFER DUCTS AND REGISTER PENETRATIONS.
2. MAXIMUM DAMPER SIZE OF 324 SQUARE INCHES (18X18) AND NO MORE THAN 162 SQUARE INCHES PER 100 SF OF CEILING AREA.
3. MAINTAIN 1" BETWEEN DAMPERS AND TRUSSES.
4. PROVIDE MINIMUM 2" SEPARATION BETWEEN DAMPERS.
5. INSTALL ONLY RADIATION DAMPERS THAT ARE UL LISTED FOR THE ASSEMBLY IN WHICH THEY ARE INTENDED.

BLOWER DOOR TESTING REQUIREMENTS

PER FLORIDA ENERGY EFFICIENCY CODE SECTION R402.4 ALL APARTMENT UNITS LOCATED WITHIN BUILDINGS THAT ARE 3 STORIES OR LESS ARE REQUIRED TO BE LEAK TESTED WITH A MAXIMUM LEAK RATE OF NO GREATER THAN 7 AIR CHANGES PER HOUR. IF LEAK TESTING RESULTS SHOW A LEAK RATE HIGHER THAN 7 AIR CHANGES PER HOUR THE UNIT THERMAL ENVELOPE MUST BE SEALED ACCORDINGLY AND RE-TESTED. A PASSING CERTIFIED BLOWER DOOR TEST REPORT MUST BE SUPPLIED TO THE AUTHORITY HAVING JURISDICTION PRIOR TO CERTIFICATE OF OCCUPANCY.

PER FLORIDA MECHANICAL CODE SECTION 401.2 IF THE UNIT LEAK RATE IS FOUND TO BE LESS THAN 3 AIR CHANGES PER HOUR DEDICATED MECHANICAL VENTILATION WILL BE REQUIRED TO BE INSTALLED.

**DOES NOT APPLY TO BUILDINGS 4 STORIES OR GREATER*

U.S. DEPARTMENT OF HOUSING AND URBAN DEVELOPMENT

ISSUE HISTORY

No.	Date	Description
1	04/15/22	Permit Submission

REVISION HISTORY

No.	Date	Description

© 2018 These documents and their contents are the property of FUGLEBERG KOCH - ADDITIONS, and are loaned for use on this project only. Any reproduction, re-venue, or modification of these documents without the expressed written consent of Fugleberg Koch is prohibited by law.

FUGLEBERG KOCH
2555 Temple Trail, Winter Park, FL 32789 (407) 629-0595
www. fuglebergkoch.com AA26002103

CONSULTANT
Joseph, Lawrence & Co Consulting Engineers
1180 HARWOOD AVE SUITE 3000
ALTAMONTE SPRINGS, FLORIDA 32714
TEL. 321.972.4466
WWW.JLCENG.COM
CA NO. 4050 - E

JLC 22.0023.00

No. 73855 PROFESSIONAL ENGINEER STATE OF FLORIDA

Drawn:	MJR/SMB
Checked:	BLS/AJB
Approved:	BLS/AJB
Date:	04/15/2022
Project #	5722

THE MADISON
HUNTSVILLE, AL

ENLARGED UNIT PLANS MECHANICAL

M3.02

NATURAL VENTILATION CALC.

UNIT 2BS

UNIT FLOOR AREA:	1,002
MIN. VENTILATION AREA: (UNIT AREA * 4%)	40.08
ACTUAL VENTILATION AREA: (OPERABLE OPENING AREA)	74.75

NATURAL VENTILATION CALCULATIONS BASED ON FLORIDA MECHANICAL CODE CHAPTER 4, SECTION 402.

PER FMC SECTION 401.2 NATURAL VENTILATION IS BEING PROVIDED TO THE DWELLING UNIT THROUGH OPERABLE WINDOWS AND DOORS. THE ADJOINING KITCHEN SPACE COMMUNICATES DIRECTLY WITH THE LIVING NATURALLY VENTILATED LIVING SPACE PER FMC SECTION 402.3 THEREBY NO MECHANICAL EXHAUST IS REQUIRED FOR THE KITCHEN.

ALL AREAS CALCULATED IN SQUARE FEET

DRYER VENT LENGTH CALC.

UNIT 2BS

HORIZONTAL LENGTH:	26.37
VERTICAL LENGTH:	7
90° (5 FT EACH):	10
45° (2.5 FT EACH):	0
TOTAL EQ. LENGTH (FT):	43.37

THIS DRYER VENT TOTAL EQUIVALENT LENGTH EXCEEDS THE CODE MAXIMUM OF 35 FEET, ANY CLOTHES DRYER CONNECTED TO THE DRYER EXHAUST SYSTEM IS REQUIRED TO HAVE A MANUFACTURER'S SERVICE RATING THAT MEETS OR EXCEEDS THE OVERALL DRYER VENT LENGTH OF THIS SYSTEM AS CALCULATED PER THE DRYER MANUFACTURER REQUIREMENTS.

MECHANICAL CONTRACTOR TO PROVIDE PERMANENTLY AFFIXED LABEL IDENTIFYING THE TOTAL EQUIVALENT LENGTH OF THE UNIT DRYER EXHAUST SYSTEM AS LISTED ABOVE WITHIN 6 FEET OF THE DRYER EXHAUST DUCTWORK CONNECTION STATING "THIS DRYER VENT IS 43.37' LONG AND REQUIRES A DRYER CAPABLE OF MEETING THIS DRYER VENT LENGTH".

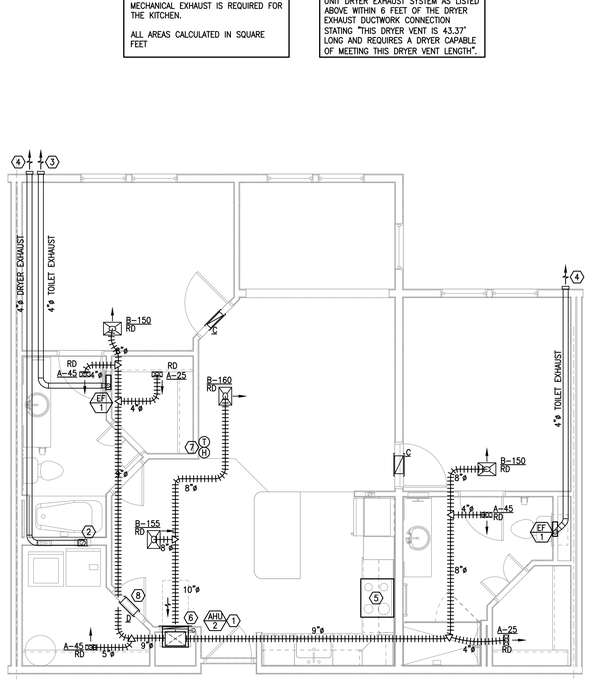

G5 UNIT 2Bs - MECHANICAL
1/4" = 1'-0"

GENERAL NOTES:

1. PROVIDE 1" DOOR UNDER CUT IN ALL BEDROOMS IN ADDITION TO TRANSFER GRILLE.
2. ALL EXHAUST OUTLETS SHALL BE FARTHER THAN 3 FEET AWAY FROM ANY OPERABLE WINDOWS.
3. DUCT SYSTEMS ARE TO BE SEALED WITH TAPE COMPLYING WITH UL 181, MASTIC GASKETS, OR AN APPROVED SYSTEM AS REQUIRED BY THE ICC IRC, SECTION M1601.3.1 OR ICC IMC, SECTION 603.9 TO REDUCE LEAKAGE.
4. ALL MATERIALS INSTALLED WITHIN PLENUM RETURN CLOSET SHALL BE ASTM E-84 25/50 FIRE/SMOKE RATED OR BE WRAPPED WITH ASTM E-84 25/50 FIRE/SMOKE RATED MATERIAL. USE PLENUM RATED FIELD WIRING EQUAL TO SOUTHWIRE WITHIN AHU CLOSET. FULLY INSULATE EXPOSED SCHEDULE 40 PVC PIPING WITH 3M FIRE BARRIER PLENUM WRAP 5A+ OR EQUAL.
5. EXHAUST VENT DUCTWORK TO BE INSTALLED WITH A $\frac{1}{4}$" SLOPE TOWARD OUTLETS FOR THE FIRST 5'-0". EXHAUST DUCTWORK TO BE INSTALLED WITH LONGITUDINAL SEAMS FACING UPWARD FOR THE ENTIRE LENGTH OF THE DUCTWORK.

REFERENCE NOTES: (X)

1. MOUNT AHU PER DETAIL AND ROUTE REFRIGERANT LINES WITHIN MECHANICAL CLOSET WALL DOWN TO 1ST FLOOR AND UNDER SLAB TO GROUND MOUNTED CONDENSING UNIT. SEE PLUMBING PLANS FOR CONDENSATE DISPOSAL. ROUTE REFRIGERANT LINES PER RISER DIAGRAM.
2. INSTALL DRYER EXHAUST WALL CONNECTION BOX PER DETAIL.
3. ROUTE 4"ø EXHAUST DUCT FROM WALL MOUNTED EXHAUST FAN THROUGH TRUSS SPACE TO BUILDING SIDEWALL PER DETAIL. TERMINATE DUCT AT EXTERIOR WALL CAP PER RISER DIAGRAM.
4. ROUTE 4"ø DRYER EXHAUST DUCT THROUGH TRUSS SPACE TO BUILDING SIDEWALL PER DETAIL. TERMINATE DUCT AT EXTERIOR WALL CAP (NO BIRD SCREEN) PER RISER DIAGRAM.
5. MICROWAVE WITH DUCTLESS HOOD.
6. PROVIDE FACTORY PANEL FOR RETURN AIR AND SERVICE ACCESS.
7. PROVIDE HONEYWELL VISIONPRO 8000 TOUCHSCREEN 7-DAY PROGRAMMABLE THERMOSTAT OR EQUAL.
8. PROVIDE LOUVER ABOVE DOOR TO THE LAUNDRY CLOSET FOR DRYER MAKE-UP AIR.

UL ASSEMBLY REQUIREMENTS:

INSTALL LOWER FLOOR DUCTS IN THE L-500 FLOOR TRUSS SYSTEM. FOLLOW THE REQUIREMENTS OF THE UL LISTING FOR THE L-500 SYSTEM.

INSTALL TOP FLOOR DUCTS IN THE P-500 ROOF TRUSS SYSTEM. FOLLOW THE REQUIREMENTS OF THE UL LISTING FOR THE P-500 SYSTEM.

1. PROVIDE CEILING RADIATION DAMPERS AT ALL SUPPLY AND TRANSFER DUCTS AND REGISTER PENETRATIONS.
2. MAXIMUM DAMPER SIZE OF 324 SQUARE INCHES (18X18) AND NO MORE THAN 162 SQUARE INCHES PER 100 SF OF CEILING AREA.
3. MAINTAIN 1" BETWEEN DAMPERS AND TRUSSES.
4. PROVIDE MINIMUM 2" SEPARATION BETWEEN DAMPERS.
5. INSTALL ONLY RADIATION DAMPERS THAT ARE UL LISTED FOR THE ASSEMBLY IN WHICH THEY ARE INTENDED.

BLOWER DOOR TESTING REQUIREMENTS

PER FLORIDA ENERGY EFFICIENCY CODE SECTION R402.4 ALL APARTMENT UNITS LOCATED WITHIN BUILDINGS THAT ARE 3 STORIES OR LESS ARE REQUIRED TO BE LEAK TESTED WITH A MAXIMUM LEAK RATE OF NO GREATER THAN 7 AIR CHANGES PER HOUR. IF LEAK TESTING RESULTS SHOW A LEAK RATE HIGHER THAN 7 AIR CHANGES PER HOUR THE UNIT THERMAL ENVELOPE MUST BE SEALED ACCORDINGLY AND RE-TESTED. A PASSING CERTIFIED BLOWER DOOR TEST REPORT MUST BE SUPPLIED TO THE AUTHORITY HAVING JURISDICTION PRIOR TO CERTIFICATE OF OCCUPANCY.

PER FLORIDA MECHANICAL CODE SECTION 401.2 IF THE UNIT LEAK RATE IS FOUND TO BE LESS THAN 3 AIR CHANGES PER HOUR DEDICATED MECHANICAL VENTILATION WILL BE REQUIRED TO BE INSTALLED.

**DOES NOT APPLY TO BUILDINGS 4 STORIES OR GREATER*

U.S. DEPARTMENT OF HOUSING AND URBAN DEVELOPMENT

ISSUE HISTORY

No.	Date	Description
1	04/15/22	Permit Submission

REVISION HISTORY

No.	Date	Description

FUGLEBERG KOCH
2555 Temple Trail, Winter Park, FL 32789 (407) 629-0595
www.fuglebergkoch.com AA26002103

CONSULTANT
Joseph, Lawrence & Co
Consulting Engineers
1180 HARWOOD AVE. SUITE 3000
ALTAMONTE SPRINGS, FLORIDA 32714
TEL. 321.972.4466
WWW.JLCENG.COM
CA NO. 4050 - E

JLC 22.0023.00

STATE OF FLORIDA LICENSED PROFESSIONAL ENGINEER No. 73885 ALEXANDER J. BRAUN

Drawn:	MJR/SMB
Checked:	BLS/AJB
Approval:	BLS/AJB
Date:	04/15/2022
Project #	5722

THE MADISON
HUNTSVILLE, AL

ENLARGED UNIT PLANS MECHANICAL

M3.05

© 2018 These documents and their contents are the property of FUGLEBERG KOCH - ARCHITECTS, and are issued only for the specific project shown herein. Any reproduction, reuse, or modification of these documents without the expressed written consent of Fugleberg Koch is prohibited by law.

NATURAL VENTILATION CALC.	
UNIT 2C	
UNIT FLOOR AREA:	1,258
MIN. VENTILATION AREA: (UNIT AREA * 4%)	50.32
ACTUAL VENTILATION AREA: (OPERABLE OPENING AREA)	151

NATURAL VENTILATION CALCULATIONS BASED ON FLORIDA MECHANICAL CODE CHAPTER 4, SECTION 402.

PER FMC SECTION 401.2 NATURAL VENTILATION IS BEING PROVIDED TO THE DWELLING UNIT THROUGH OPERABLE WINDOWS AND DOORS. THE ADJOINING KITCHEN SPACE COMMUNICATES DIRECTLY WITH THE LIVING NATURALLY VENTILATED LIVING SPACE PER FMC SECTION 402.3 THEREBY NO MECHANICAL EXHAUST IS REQUIRED FOR THE KITCHEN.

ALL AREAS CALCULATED IN SQUARE FEET

DRYER VENT LENGTH CALC.	
UNIT 2C	
HORIZONTAL LENGTH:	25.46
VERTICAL LENGTH:	7
90° (5 FT EACH):	5
45° (2.5 FT EACH):	2.5
TOTAL EQ. LENGTH (FT):	40

THIS DRYER VENT TOTAL EQUIVALENT LENGTH EXCEEDS THE CODE MAXIMUM OF 35 FEET, ANY CLOTHES DRYER CONNECTED TO THE DRYER EXHAUST SYSTEM IS REQUIRED TO HAVE A MANUFACTURER'S SERVICE RATING THAT MEETS OR EXCEEDS THE OVERALL DRYER VENT LENGTH OF THIS SYSTEM AS CALCULATED PER THE DRYER MANUFACTURER REQUIREMENTS.

MECHANICAL CONTRACTOR TO PROVIDE PERMANENTLY AFFIXED LABEL IDENTIFYING THE TOTAL EQUIVALENT LENGTH OF THE UNIT DRYER EXHAUST SYSTEM AS LISTED ABOVE WITHIN 6 FEET OF THE DRYER EXHAUST DUCTWORK CONNECTION STATING "THIS DRYER VENT IS 40' LONG AND REQUIRES A DRYER CAPABLE OF MEETING THIS DRYER VENT LENGTH".

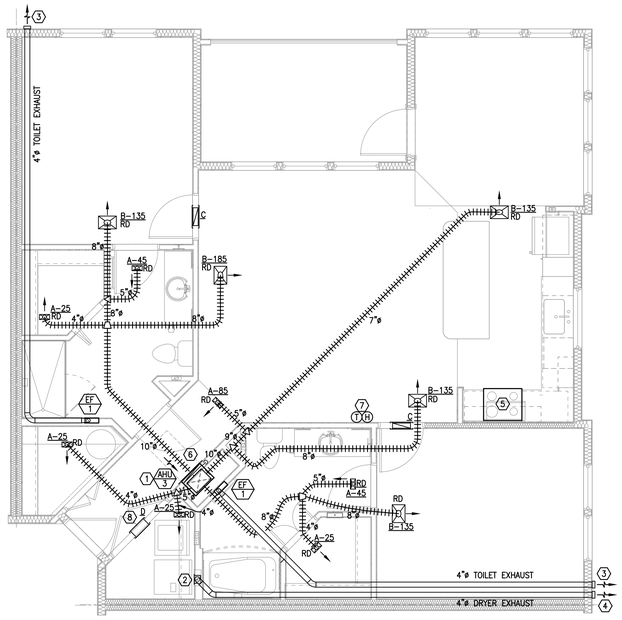

G5 UNIT 2C - MECHANICAL
1/4" = 1'-0"

GENERAL NOTES:

1. PROVIDE 1" DOOR UNDER CUT IN ALL BEDROOMS IN ADDITION TO TRANSFER GRILLE.
2. ALL EXHAUST OUTLETS SHALL BE FARTHER THAN 3 FEET AWAY FROM ANY OPERABLE WINDOWS.
3. DUCT SYSTEMS ARE TO BE SEALED WITH TAPE COMPLYING WITH UL 181, MASTIC GASKETS, OR AN APPROVED SYSTEM AS REQUIRED BY THE ICC IRC, SECTION M1601.3.1 OR ICC IMC, SECTION 603.9 TO REDUCE LEAKAGE.
4. ALL MATERIALS INSTALLED WITHIN PLENUM RETURN CLOSET SHALL BE ASTM E-84 25/50 FIRE/SMOKE RATED OR BE WRAPPED WITH ASTM E-84 25/50 FIRE/SMOKE RATED MATERIAL. USE PLENUM RATED FIELD WIRING EQUAL TO SOUTHWIRE WITHIN AHU CLOSET. FULLY INSULATE EXPOSED SCHEDULE 40 PVC PIPING WITH 3M FIRE BARRIER PLENUM WRAP 5A+ OR EQUAL.
5. EXHAUST VENT DUCTWORK TO BE INSTALLED WITH A $\frac{1}{4}$" SLOPE TOWARD OUTLETS FOR THE FIRST 5'-0". EXHAUST DUCTWORK TO BE INSTALLED WITH LONGITUDINAL SEAMS FACING UPWARD FOR THE ENTIRE LENGTH OF THE DUCTWORK.

REFERENCE NOTES: (X)

1. MOUNT AHU PER DETAIL AND ROUTE REFRIGERANT LINES WITHIN MECHANICAL CLOSET WALL DOWN TO 1ST FLOOR AND UNDER SLAB TO GROUND MOUNTED CONDENSING UNIT. SEE PLUMBING PLANS FOR CONDENSATE DISPOSAL. ROUTE REFRIGERANT LINES PER RISER DIAGRAM.
2. INSTALL DRYER EXHAUST WALL CONNECTION BOX PER DETAIL.
3. ROUTE 4"ø EXHAUST DUCT FROM WALL MOUNTED EXHAUST FAN THROUGH TRUSS SPACE TO BUILDING SIDEWALL PER DETAIL. TERMINATE DUCT AT EXTERIOR WALL CAP PER RISER DIAGRAM.
4. ROUTE 4"ø DRYER EXHAUST DUCT THROUGH TRUSS SPACE TO BUILDING SIDEWALL PER DETAIL. TERMINATE DUCT AT EXTERIOR WALL CAP (NO BIRD SCREEN) PER RISER DIAGRAM.
5. MICROWAVE WITH DUCTLESS HOOD.
6. PROVIDE FACTORY PANEL FOR RETURN AIR AND SERVICE ACCESS.
7. PROVIDE HONEYWELL VISIONPRO 8000 TOUCHSCREEN 7-DAY PROGRAMMABLE THERMOSTAT OR EQUAL.
8. PROVIDE LOUVER ABOVE DOOR TO THE LAUNDRY CLOSET FOR DRYER MAKE-UP AIR.

UL ASSEMBLY REQUIREMENTS:

INSTALL LOWER FLOOR DUCTS IN THE L-500 FLOOR TRUSS SYSTEM. FOLLOW THE REQUIREMENTS OF THE UL LISTING FOR THE L-500 SYSTEM.

INSTALL TOP FLOOR DUCTS IN THE P-500 ROOF TRUSS SYSTEM. FOLLOW THE REQUIREMENTS OF THE UL LISTING FOR THE P-500 SYSTEM.

1. PROVIDE CEILING RADIATION DAMPERS AT ALL SUPPLY AND TRANSFER DUCTS AND REGISTER PENETRATIONS.
2. MAXIMUM DAMPER SIZE OF 324 SQUARE INCHES (18X18) AND NO MORE THAN 162 SQUARE INCHES PER 100 SF OF CEILING AREA.
3. MAINTAIN 1" BETWEEN DAMPERS AND TRUSSES.
4. PROVIDE MINIMUM 2" SEPARATION BETWEEN DAMPERS.
5. INSTALL ONLY RADIATION DAMPERS THAT ARE UL LISTED FOR THE ASSEMBLY IN WHICH THEY ARE INTENDED.

BLOWER DOOR TESTING REQUIREMENTS

PER FLORIDA ENERGY EFFICIENCY CODE SECTION R402.4 ALL APARTMENT UNITS LOCATED WITHIN BUILDINGS THAT ARE 3 STORIES OR LESS ARE REQUIRED TO BE LEAK TESTED WITH A MAXIMUM LEAK RATE OF NO GREATER THAN 7 AIR CHANGES PER HOUR. IF LEAK TESTING RESULTS SHOW A LEAK RATE HIGHER THAN 7 AIR CHANGES PER HOUR THE UNIT THERMAL ENVELOPE MUST BE SEALED ACCORDINGLY AND RE-TESTED. A PASSING CERTIFIED BLOWER DOOR TEST REPORT MUST BE SUPPLIED TO THE AUTHORITY HAVING JURISDICTION PRIOR TO CERTIFICATE OF OCCUPANCY.

PER FLORIDA MECHANICAL CODE SECTION 401.2 IF THE UNIT LEAK RATE IS FOUND TO BE LESS THAN 3 AIR CHANGES PER HOUR DEDICATED MECHANICAL VENTILATION WILL BE REQUIRED TO BE INSTALLED.

*DOES NOT APPLY TO BUILDINGS 4 STORIES OR GREATER

U.S. DEPARTMENT OF HOUSING AND URBAN DEVELOPMENT

ISSUE HISTORY

No.	Date	Description
1	04/15/22	Permit Submission

REVISION HISTORY

No.	Date	Description

© 2015 These documents and their contents are the property of FUGLEBERG KOCH - AA26002103. and are issued only for the specified project. Any reproduction, re-use, or modification of these documents without the expressed written consent of Fugleberg Koch is prohibited by law.

FUGLEBERG KOCH
2555 Temple Trail, Winter Park, FL 32789 (407) 629-0595
www. fuglebergkoch.com AA26002103

CONSULTANT
Joseph, Lawrence & Co
Consulting Engineers
1180 HARWOOD AVE. SUITE 3000
ALTAMONTE SPRINGS, FLORIDA 32714
TEL: 321.972.4466
WWW.JLCENG.COM
CA NO. 4050 - E

JLC 22.0023.00

A. B. BRANDT No. 73885 PROFESSIONAL ENGINEER STATE OF FLORIDA

Drawn:	MJR/SMB
Checked:	BLS/AJB
Approval:	BLS/AJB
Date:	04/15/2022
Project #:	5722

THE MADISON
HUNTSVILLE, AL

ENLARGED UNIT PLANS MECHANICAL

M3.06

GENERAL NOTES:

1. CONTRACTOR TO VERIFY ALL MECHANICAL EQUIPMENT SELECTED FITS WITHIN DESIGNATED SPACE SHOWN ON MECHANICAL PLANS AND PROVIDES THE CORRECT CLEARANCES REQUIRED BY THE MANUFACTURER.
2. CONTRACTOR SHALL COORDINATE VOLTAGE, PHASE AND REQUIRED MOCP FOR EACH PIECE OF EQUIPMENT WITH THE ELECTRICAL CONTRACTOR PRIOR TO ORDERING.
3. IF PRODUCTS/EQUIPMENT ARE VALUE ENGINEERED OR SUBSTITUTED IT IS THE CONTRACTORS RESPONSIBILITY TO FIELD COORDINATE ALL NEW PRODUCTS/EQUIPMENT REQUIREMENTS WITH OTHER DISCIPLINES/TRADES.

FAN SCHEDULE

MARK	AREA SERVED	TYPE	CFM	T.S.P.	HP/WATTS	RPM	VOLTS/PH	SONES	MANUFACTURER & MODEL NO.	NOTES
EF-1	UNITS	CEILING	52	0.25	7.7 WATTS	1,050	120/1ø	0.5	PANASONIC FV-0510VSC1 OR EQUAL	1., 2. & 3.
EF-2.G	UNIT GARAGE	CEILING	163	0.25	19 WATTS	911	120/1ø	0.8	GREENHECK CSP-A390-VG	4. & 5.
EF-3.G	UNIT GARAGE	CEILING	240	0.25	34 WATTS	1,021	120/1ø	0.8	GREENHECK CSP-A390-VG	4. & 5.
EF-4.G	UNIT GARAGE	CEILING	290	0.25	49 WATTS	1,129	120/1ø	1.0	GREENHECK CSP-A390-VG	4. & 5.
EF-5.G	UNIT GARAGE	CEILING	200	0.25	25 WATTS	950	120/1ø	0.7	GREENHECK CSP-A390-VG	4. & 5.

NOTES:
1. EXHAUST FAN EQUIPPED WITH 4" OVAL CONNECTION. PROVIDE DUCTWORK TRANSITION AS REQUIRED.
2. EXHAUST FAN TO OPERATE ON INDIVIDUAL SWITCH WITHIN BATHROOM.
3. PROVIDE EXHAUST FAN CEILING RADIATION DAMPER PANASONIC MODEL PC-RD05C5 WHEN INSTALLED IN RATED CEILING.
4. PROVIDE RADIATION DAMPER/FIRE DAMPER AT ALL RATED ASSEMBLY PENETRATIONS.
5. PROVIDE WITH CARBON MONOXIDE DETECTOR MOUNTED ON GARAGE WALL FOR CONTROL OF FAN. FOLLOW FACTORY RECOMMENDED LOCATION AND MOUNTING HEIGHT.

LOUVER SCHEDULE (AMENITIES AREA)

MARK	SERVICE	AIR FLOW (CFM)	FREE AREA (SF)	W x H (IN)	MAX. VELOCITY IN FPM	MAX. PRESSURE DROP (IN H20)	MANUFACTURER & MODEL NO.	NOTES
L-1	EXHAUST AIR	240	0.4	14"x12"	632	0.06	GREENHECK EDD-401-14x12	1. & 2.
L-2	OUTSIDE AIR	290	0.5	14"x16"	598	0.05	GREENHECK ESD-635-14x16	1. & 2.
L-3	OUTSIDE AIR	198	0.3	12"x14"	687	0.06	GREENHECK ESD-635-12x14	1. & 2.

NOTES:
1. PROVIDE BIRD SCREEN.
2. PROVIDE GRAVITY BACK DRAFT DAMPER ON INTERIOR SIDE OF LOUVER.

FLEX DUCT SCHEDULE

CFM	FLEX SIZE
0 – 35	4"ø
36 – 60	5"ø
61 – 100	6"ø
101 – 140	7"ø
141 – 210	8"ø
211 – 280	9"ø
281 – 400	10"ø
401 – 600	12"ø
601 – 900	14"ø
901 – 1,300	16"ø
1,300 – 1,700	18"ø

AIR DEVICE SCHEDULE (APARTMENTS)

MARK	DESCRIPTION	FACE SIZE	NECK	MATERIAL	MANUFACTURER & MODEL NO.	NOTES
A	LOUVERED FACE SUPPLY DIFFUSER	8"x4"	SEE PLAN	STEEL	TRUAIRE 401	1.
B	LOUVERED FACE SUPPLY DIFFUSER	14"x10"	SEE PLAN	STEEL	TRUAIRE 401	1.
C	RETURN AIR TRANSFER GRILLE	14"x8"	SEE PLAN	ALUMINUM	TAMARACK TECHNOLOGIES RAP 14.8	1.
D	RETURN AIR TRANSFER GRILLE	14"x8"	SEE PLAN	ALUMINUM	TRUAIRE 170	1.
E	LOUVERED FACE RETURN GRILLE	18"x18"	SEE PLAN	STEEL	TRUAIRE 170	1.

NOTES:
1. COORDINATE SURFACE FINISHES WITH ARCHITECTURAL DRAWINGS.

APARTMENT DX SPLIT AIR HANDLING UNIT SCHEDULE

		FAN					COOLING COIL			FILTERS			ELECTRIC HEATING COIL			SINGLE POINT UNIT ELEC. REQUIREMENTS		UNIT INFORMATION						
MARK	LOCATION SERVED	TOTAL AIR FLOW (CFM)	OUTSIDE AIR FLOW (CFM)	EXTERNAL STATIC PRESS. (IN.WG.)	DRIVE TYPE	HP	ENTERING AIR TEMP. (F° DB/WB)	LEAVING AIR TEMP. (F° DB/WB)	TOTAL CAPACITY (BTUH)	TYPE	EFFICIENCY	THICKNESS	NO. OF STAGES	TOTAL KW	VOLTAGE/ PHASE	SINGLE CIRCUIT MCA	SINGLE CIRCUIT MOCP	UNIT SIZE (H"xW"xD")	OPERATING WEIGHT (LBS.)	MANUFACTURER	MODEL NUMBER	MOUNTING	NOTES
AHU-1	1A, 1B, 1BS	600	–	0.3	DIRECT	1/3	80.0/67.0	56.0/54.0	18,000	THROWAWAY	25%-30%	1"	1	6	208/1ø	36.0	40	36"x20"x16"	84	GOODMAN OR EQUAL	AWUF190816*	THRU WALL	1., 2. 3. & 4
AHU-2	2B, 2BS	800	–	0.3	DIRECT	1/3	80.0/67.0	56.0/54.0	24,000	THROWAWAY	25%-30%	1"	1	6	208/1ø	36.0	40	36"x20"x16"	84	GOODMAN OR EQUAL	AWUF250816*	THRU WALL	1., 2. 3. & 4
AHU-3	2C	1,000	–	0.3	DIRECT	1/2	80.0/67.0	56.0/54.0	30,000	THROWAWAY	25%-30%	1"	1	7.5	208/1ø	49.1	50	36"x24"x21"	109	GOODMAN OR EQUAL	AWUF321016*	THRU WALL	1., 2. 3. & 4
AHU-4	3C	1,200	–	0.3	DIRECT	1/2	80.0/67.0	56.0/54.0	36,000	THROWAWAY	25%-30%	1"	1	7.5	208/1ø	49.1	50	36"x24"x21"	96	GOODMAN OR EQUAL	AWUF371016*	STAND MOUNT	1., 2, & 3.

NOTES:
1. PROVIDE COMPLETE WITH PULL TYPE DISCONNECT SWITCH (PROVIDED BY DIVISION 16) AND HONEYWELL TH8321WF1001 7-DAY PROGRAMMABLE THERMOSTAT AND INTEGRAL HUMIDISTAT.
2. ROUTE AND SIZE REFRIGERANT LINES PER MANUFACTURER'S REQUIREMENTS.
3. PROVIDE CONDENSATE OVERFLOW SWITCH SAFE-T SWITCH MODEL SS2 OR EQUIVALENT.
4. PROVIDE MANUFACTURER'S WALL PANEL, MODEL NUMBER WAD-1 OR WAD-2 BASED ON AIR HANDLER MODEL NUMBER.

APARTMENT DX SPLIT CONDENSING UNIT SCHEDULE (STRAIGHT COOL)

MARK	LOCATION	COMPRESSOR			CONDENSER FANS		ELECTRICAL							UNIT INFORMATION		MANUFACTURER	MODEL NUMBER	NOTES
		OUTDOOR DESIGN TEMP. (F°)	QTY.	CAPACITY STEPS %	QTY.	NOMINAL HP	VOLTAGE/ PHASE	COMPRESSOR RLA EACH	CONDENSER FANS QTY.	CONDENSER FANS FLA (EA.)	MCA	MOCP	SEER	UNIT SIZE (H"xW"xD")	OPERATING WEIGHT (LBS.)			
CU-1	GROUND	95°	1	100	1	1/8	208/1ø	9.0	1	0.70	12.0	20	14.0	28"x26"x26"	131	GOODMAN OR EQUAL	GSX140191*	1. & 2.
CU-2	GROUND	95°	1	100	1	1/8	208/1ø	13.5	1	0.70	17.6	30	14.0	33"x26"x26"	136	GOODMAN OR EQUAL	GSX140251*	1. & 2.
CU-3	GROUND	95°	1	100	1	1/6	208/1ø	12.8	1	0.95	17.0	25	14.0	33"x29"x29"	162	GOODMAN OR EQUAL	GSX140311*	1. & 2.
CU-4	GROUND	95°	1	100	1	1/6	208/1ø	14.1	1	0.95	18.6	30	14.0	33"x29"x29"	162	GOODMAN OR EQUAL	GSX140371*	1. & 2.

NOTES:
1. PROVIDE COMPLETE WITH PULL TYPE DISCONNECT SWITCH (PROVIDED BY DIVISION 16), TIME DELAY RELAY AND ANTI-SHORT CYCLE TIMER.
2. MOUNT AND SECURE CONDENSING UNITS PER DETAILS PROVIDED.

MINI-SPLIT AIR HANDLING UNIT SCHEDULE

		FAN					COOLING COIL						FILTERS			ELECTRIC HEATING COIL			SINGLE POINT UNIT ELEC. REQUIREMENTS			UNIT INFORMATION				
MARK	LOCATION SERVED	TOTAL AIR FLOW (CFM)	OUTSIDE AIR FLOW (CFM)	EXTERNAL STATIC PRESS. (IN.WG.)	DRIVE TYPE	FLA	ENTERING AIR TEMP. (F° DB/WB)	LEAVING AIR TEMP. (F° DB/WB)	TOTAL CAPACITY (BTUH)	SENSIBLE CAPACITY (BTUH)	COIL AREA (SQ.FT.)	COIL ROW/FINS	TYPE	EFFICIENCY	THICKNESS	TOTAL CAPACITY (BTUH)	VOLTS/ PHASE	HEATER WATTS	VOLTAGE/ PHASE	SINGLE CIRCUIT MCA	SINGLE CIRCUIT MOCP	UNIT SIZE (H"xW"xD")	OPERATING WEIGHT (LBS.)	MANUFACTURER	MODEL NUMBER	NOTES
MAU-1	ELEVATOR EQUIP.	385	–	–	–	0.19	80.0/67.0	56.0/54.0	12,000	–	–	–	INTERNAL	25%-30%	–	–	–	–	208/1ø	1	–	12"x35"x10"	28	MITSUBISHI OR EQUAL	TPKA0A0121LA00A	1, 2, & 3
MAU-2	FACP	385	–	–	–	0.19	80.0/67.0	56.0/54.0	12,000	–	–	–	INTERNAL	25%-30%	–	14,000	208/1ø	1,030	208/1ø	1	–	12"x35"x10"	28	MITSUBISHI OR EQUAL	TPKA0A0121LA00A	1, 2, & 3

NOTES:
1. POWER FOR INDOOR UNIT PROVIDED FROM EXTERIOR CONDENSER. COORDINATE WITH ELECTRICAL CONTRACTOR TO PROVIDE POWER WIRING BETWEEN EACH UNIT IN FIELD.
2. ROUTE AND SIZE REFRIGERANT LINES PER MANUFACTURER'S REQUIREMENTS.
3. MOUNT AS HIGH ON WALL AS POSSIBLE.

MINI-SPLIT CONDENSING UNIT SCHEDULE

MARK	LOCATION	COMPRESSOR			CONDENSER FANS		ELECTRICAL							UNIT INFORMATION		MANUFACTURER	MODEL NUMBER	NOTES
		OUTDOOR DESIGN TEMP. (F°)	QTY.	CAPACITY STEPS %	QTY.	NOMINAL HP	VOLTAGE/ PHASE	COMPRESSOR RLA/LRA	CONDENSER FANS QTY.	CONDENSER FANS F.L.A.	MCA	MOCP	SEER	UNIT SIZE (H"xW"xD")	OPERATING WEIGHT (LBS.)			
MCU-1	GROUND	95	1	100	1	–	208/1ø	7.0/12.0	1	0.50	11	28	21	25"x32"x12"	92	MITSUBISHI OR EQUAL	TRUYA0121KA70NA	1. & 2.
MCU-2	GROUND	95	1	100	1	–	208/1ø	7.0/12.0	1	0.50	11	28	21	25"x32"x12"	93	MITSUBISHI OR EQUAL	TRUZA0121KA70NA	1. & 2.

NOTES:
1. PROVIDE COMPLETE WITH TIME DELAY RELAY AND ANTI-SHORT CYCLE TIMER.
2. DISCONNECT SWITCH PROVIDED BY DIVISION 16.

U.S. DEPARTMENT OF HOUSING AND URBAN DEVELOPMENT

ISSUE HISTORY

No.	Date	Description
1	04/15/22	Permit Submission

REVISION HISTORY

No.	Date	Description

© 2018 These documents and their contents are the property of FUGLEBERG KOCH - ARCHITECTS, INC. and are issued only for the specific project noted on these drawings. Any reproductions, revisions, or modifications of these documents without the expressed written consent of Fugleberg Koch is prohibited by law.

FUGLEBERG KOCH
2555 Temple Trail, Winter Park, FL 32789 (407) 629-0395
www.fuglebergkoch.com AA26002103

CONSULTANT
Joseph, Lawrence & Co
Consulting Engineers
1180 HARWOOD AVE. SUITE 3000
ALTAMONTE SPRINGS, FLORIDA 32714
TEL: 321.972.4466
WWW.JLCENG.COM
CA NO. 4050 - E

JLC 22.0023.00

THE MADISON
HUNTSVILLE, AL

Drawn:	MJR/SMB
Checked:	BLS/AJB
Approval:	BLS/AJB
Date:	04/15/2022
Project #	5722

SCHEDULES
MECHANICAL

M5.01

GENERAL NOTES:

1. CONTRACTOR TO VERIFY ALL MECHANICAL EQUIPMENT SELECTED FITS WITHIN DESIGNATED SPACE SHOWN ON MECHANICAL PLANS AND PROVIDES THE CORRECT CLEARANCES REQUIRED BY THE MANUFACTURER.
2. CONTRACTOR SHALL COORDINATE VOLTAGE, PHASE AND REQUIRED MOCP FOR EACH PIECE OF EQUIPMENT WITH THE ELECTRICAL CONTRACTOR PRIOR TO ORDERING.
3. IF PRODUCTS/EQUIPMENT ARE VALUE ENGINEERED OR SUBSTITUTED IT IS THE CONTRACTORS RESPONSIBILITY TO FIELD COORDINATE ALL NEW PRODUCTS/EQUIPMENT REQUIREMENTS WITH OTHER DISCIPLINES/TRADES.

AIR DEVICE SCHEDULE (CORRIDORS)

MARK	DESCRIPTION	FACE SIZE	NECK	MATERIAL	MANUFACTURER & MODEL NO.	NOTES
CA	LOUVERED FACE SUPPLY DIFFUSER – CEILING	12"x12"	SEE PLAN	STEEL	USAIRE 4700	1.
CB	LOUVERED FACE RETURN GRILLE	18"x18"	SEE PLAN	STEEL	USAIRE RHF	1.

NOTES:
1. COORIDINATE SURFACE FINISHES WITH ARCHITECTURAL DRAWINGS.

FLEX DUCT SCHEDULE

CFM	FLEX SIZE
0 – 35	4"ø
36 – 60	5"ø
61 – 100	6"ø
61 – 140	7"ø
141 – 210	8"ø
211 – 280	9"ø
281 – 400	10"ø
401 – 600	12"ø
601 – 900	14"ø
901 – 1,300	16"ø
1,300 – 1,700	18"ø

OUTSIDE AIR CALCULATIONS (BLDG 1 CORRIDORS)

CLASSIFICATION	OCC. FACTOR OCCUPANCY/ 1000 SQFT. (PERSONS)	ASHRAE 62.1 VALUES PER TABLE 6.2.2.1		SPACE AREA (SQFT)	SPACE LOAD (PERSONS)	OUTDOOR AIR REQUIRED	OUTDOOR AIR SUPPLIED
		Rp	Ra	Az	Pz	(CFM)	(CFM)
1ST FLOOR							
1ST FLOOR CORRIDOR	–	–	0.06	1,310	–	78.60	80
2ND FLOOR							
2ND FLOOR CORRIDOR	–	–	0.06	1,310	–	78.60	80
3RD FLOOR							
3RD FLOOR CORRIDOR	–	–	0.06	1,310	–	78.60	80
4TH FLOOR							
4TH FLOOR CORRIDOR	–	–	0.06	1,310	–	78.60	80
TOTAL	–	–	–	5,240*	–	314.40	320

NOTES:
1. REQUIRED OUTDOOR VENTILATION AIR VALUES TAKEN FORM ASHRAE 62.1, TABLE 6.2.2.1.
   VENTILATION BREATHING ZONE FORMULA: Vbz = Rp * Pz + Ra * Az
   Pz = OCCUPANCY FACTOR * SPACE AREA
2. OUTSIDE AIR CALC. REFERENCES CHAPTER 15 OF THE 2020 EDITION OF THE OF THE FLORIDA BUILDING BUILDING CODE (MECHANICAL).

*AREA DOES NOT INCLUDE RESTROOMS.

OUTSIDE AIR CALCULATIONS (BLDG 2 CORRIDORS)

CLASSIFICATION	OCC. FACTOR OCCUPANCY/ 1000 SQFT. (PERSONS)	ASHRAE 62.1 VALUES PER TABLE 6.2.2.1		SPACE AREA (SQFT)	SPACE LOAD (PERSONS)	OUTDOOR AIR REQUIRED	OUTDOOR AIR SUPPLIED
		Rp	Ra	Az	Pz	(CFM)	(CFM)
1ST FLOOR							
1ST FLOOR CORRIDOR	–	–	0.06	1,310	–	78.60	80
2ND FLOOR							
2ND FLOOR CORRIDOR	–	–	0.06	1,310	–	78.60	80
3RD FLOOR							
3RD FLOOR CORRIDOR	–	–	0.06	1,310	–	78.60	80
4TH FLOOR							
4TH FLOOR CORRIDOR	–	–	0.06	1,310	–	78.60	80
TOTAL	–	–	–	5,240	–	314.40	320

NOTES:
1. REQUIRED OUTDOOR VENTILATION AIR VALUES TAKEN FORM ASHRAE 62.1, TABLE 6.2.2.1.
   VENTILATION BREATHING ZONE FORMULA: Vbz = Rp * Pz + Ra * Az
   Pz = OCCUPANCY FACTOR * SPACE AREA
2. OUTSIDE AIR CALC. REFERENCES CHAPTER 15 OF THE 2020 EDITION OF THE OF THE FLORIDA BUILDING BUILDING CODE (MECHANICAL).

*AREA DOES NOT INCLUDE RESTROOMS.

COORIDOR DX SPLIT AIR HANDLING UNIT SCHEDULE

MARK	LOCATION SERVED	FAN					COOLING COIL			FILTERS			ELECTRIC HEATING COIL			SINGLE POINT UNIT ELEC. REQUIREMENTS		UNIT INFORMATION					
		TOTAL AIR FLOW (CFM)	OUTSIDE AIR FLOW (CFM)	EXTERNAL STATIC PRESS. (IN.WG.)	DRIVE TYPE	HP	ENTERING AIR TEMP. (F° DB/WB)	LEAVING AIR TEMP. (F° DB/WB)	TOTAL CAPACITY (BTUH)	TYPE	EFFICIENCY	THICKNESS	NO. OF STAGES	TOTAL KW	VOLTAGE/ PHASE	SINGLE CIRCUIT MCA	SINGLE CIRCUIT MOCP	UNIT SIZE (H"xW"xD")	OPERATING WEIGHT (LBS.)	MANUFACTURER	MODEL NUMBER	MOUNTING	NOTES
AHU-1.1	CORRIDOR	1,000	80	0.8	DIRECT	3/4	80.0/67.0	56.0/54.0	30,000	THROWAWAY	25%-30%	1"	1	5	208/1ø	27.0	30	54"x18"x21"	129	GOODMAN OR EQUAL	ASPT37B14*	METAL STAND	1., 2., 3. & 4.
AHU-1.2	CORRIDOR	1,000	80	0.8	DIRECT	3/4	80.0/67.0	56.0/54.0	30,000	THROWAWAY	25%-30%	1"	1	5	208/1ø	27.0	30	54"x18"x21"	129	GOODMAN OR EQUAL	ASPT37B14*	METAL STAND	1., 2., 3. & 4.
AHU-1.3	CORRIDOR	1,000	80	0.8	DIRECT	3/4	80.0/67.0	56.0/54.0	30,000	THROWAWAY	25%-30%	1"	1	5	208/1ø	27.0	30	54"x18"x21"	129	GOODMAN OR EQUAL	ASPT37B14*	METAL STAND	1., 2., 3. & 4.
AHU-1.4	CORRIDOR	1,000	80	0.8	DIRECT	3/4	80.0/67.0	56.0/54.0	30,000	THROWAWAY	25%-30%	1"	1	5	208/1ø	27.0	30	54"x18"x21"	129	GOODMAN OR EQUAL	ASPT37B14*	METAL STAND	1., 2., 3. & 4.
AHU-2.1	CORRIDOR	1,000	80	0.8	DIRECT	3/4	80.0/67.0	56.0/54.0	30,000	THROWAWAY	25%-30%	1"	1	5	208/1ø	27.0	30	54"x18"x21"	129	GOODMAN OR EQUAL	ASPT37B14*	METAL STAND	1., 2., 3. & 4.
AHU-2.2	CORRIDOR	1,000	80	0.8	DIRECT	3/4	80.0/67.0	56.0/54.0	30,000	THROWAWAY	25%-30%	1"	1	5	208/1ø	27.0	30	54"x18"x21"	129	GOODMAN OR EQUAL	ASPT37B14*	METAL STAND	1., 2., 3. & 4.
AHU-2.3	CORRIDOR	1,000	80	0.8	DIRECT	3/4	80.0/67.0	56.0/54.0	30,000	THROWAWAY	25%-30%	1"	1	5	208/1ø	27.0	30	54"x18"x21"	129	GOODMAN OR EQUAL	ASPT37B14*	METAL STAND	1., 2., 3. & 4.
AHU-2.4	CORRIDOR	1,000	80	0.8	DIRECT	3/4	80.0/67.0	56.0/54.0	30,000	THROWAWAY	25%-30%	1"	1	5	208/1ø	27.0	30	54"x18"x21"	129	GOODMAN OR EQUAL	ASPT37B14*	METAL STAND	1., 2., 3. & 4.

NOTES:
1. PROVIDE COMPLETE WITH PULL TYPE DISCONNECT SWITCH (PROVIDED BY DIVISION 16) AND HONEYWELL TH8321WF1001 7-DAY PROGRAMMABLE THERMOSTAT AND INTEGRAL HUMIDISTAT.
2. ROUTE AND SIZE REFRIGERANT LINES PER MANUFACTURER'S REQUIREMENTS.
3. PROVIDE CONDENSATE OVERFLOW SWITCH SAFE-T SWITCH MODEL SS2 OR EQUIVALENT.
4. PROVIDE WITH MOTORIZED OUTSIDE AIR DAMPER. DAMPER TO BE INTERLOCKED WITH AHU AND BALANCED PER OUTSIDE AIR SCHEDULE.
5. PROVIDE SUPPLY AND RETURN DUCT MOUNTED SMOKE DETECTOR FOR UNITS 2000 CFM AND OVER.

CORRIDOR DX SPLIT CONDENSING UNIT SCHEDULE (STRAIGHT COOL)

MARK	LOCATION	COMPRESSOR			CONDENSER FANS		ELECTRICAL							UNIT INFORMATION		MANUFACTURER	MODEL NUMBER	NOTES
		OUTDOOR DESIGN TEMP. (F°)	QTY.	CAPACITY STEPS %	QTY.	NOMINAL HP	VOLTAGE/ PHASE	COMPRESSOR RLA EACH	CONDENSER FANS QTY.	FLA (EA.)	MCA	MOCP	SEER	UNIT SIZE (H"xW"xD")	OPERATING WEIGHT (LBS.)			
CU-1.1	GROUND	95°	1	100	1	1/6	208/1ø	12.8	1	0.95	17.0	25	14.0	33"x29"x29"	162	GOODMAN OR EQUAL	GSX140311*	1. & 2.
CU-1.2	GROUND	95°	1	100	1	1/6	208/1ø	12.8	1	0.95	17.0	25	14.0	33"x29"x29"	162	GOODMAN OR EQUAL	GSX140311*	1. & 2.
CU-1.3	GROUND	95°	1	100	1	1/6	208/1ø	12.8	1	0.95	17.0	25	14.0	33"x29"x29"	162	GOODMAN OR EQUAL	GSX140311*	1. & 2.
CU-1.4	GROUND	95°	1	100	1	1/6	208/1ø	12.8	1	0.95	17.0	25	14.0	33"x29"x29"	162	GOODMAN OR EQUAL	GSX140311*	1. & 2.
CU-2.1	GROUND	95°	1	100	1	1/6	208/1ø	12.8	1	0.95	17.0	25	14.0	33"x29"x29"	162	GOODMAN OR EQUAL	GSX140311*	1. & 2.
CU-2.2	GROUND	95°	1	100	1	1/6	208/1ø	12.8	1	0.95	17.0	25	14.0	33"x29"x29"	162	GOODMAN OR EQUAL	GSX140311*	1. & 2.
CU-2.3	GROUND	95°	1	100	1	1/6	208/1ø	12.8	1	0.95	17.0	25	14.0	33"x29"x29"	162	GOODMAN OR EQUAL	GSX140311*	1. & 2.
CU-2.4	GROUND	95°	1	100	1	1/6	208/1ø	12.8	1	0.95	17.0	25	14.0	33"x29"x29"	162	GOODMAN OR EQUAL	GSX140311*	1. & 2.

NOTES:
1. PROVIDE COMPLETE WITH PULL TYPE DISCONNECT SWITCH (PROVIDED BY DIVISION 16), TIME DELAY RELAY AND ANTI-SHORT CYCLE TIMER.
2. MOUNT AND SECURE CONDENSING UNITS PER DETAILS PROVIDED.

U.S. DEPARTMENT OF HOUSING AND URBAN DEVELOPMENT

ISSUE HISTORY

No.	Date	Description
1	04/15/22	Permit Submission

REVISION HISTORY

No.	Date	Description

© 2015 These documents and their contents are the property of FUGLEBERG KOCH - AA26002103, and are issued for the specified project only. Any reproduction, revision, or modification of these documents without the expressed written consent of Fugleberg Koch is prohibited by law.

FUGLEBERG KOCH
2555 Temple Trail, Winter Park, FL 32789 (407) 629-0595
www.fuglebergkoch.com AA26002103

CONSULTANT
Joseph, Lawrence & Co
Consulting Engineers
1180 HARWOOD AVE SUITE 3000
ALTAMONTE SPRINGS, FLORIDA 32714
TEL: 321.972.4466
WWW.JLCENG.COM
CA NO. 4050 - E

JLC 22.0023.00

A. B. BLANKENSHIP No. 39885 PROFESSIONAL ENGINEER STATE OF ALABAMA

THE MADISON	Drawn: MJR/SMB
	Checked: BLS/AJB
HUNTSVILLE, AL	Approved: BLS/AJB
	Date: 04/15/2022
	Project #: 5722

SCHEDULE
MECHANICAL

M5.03

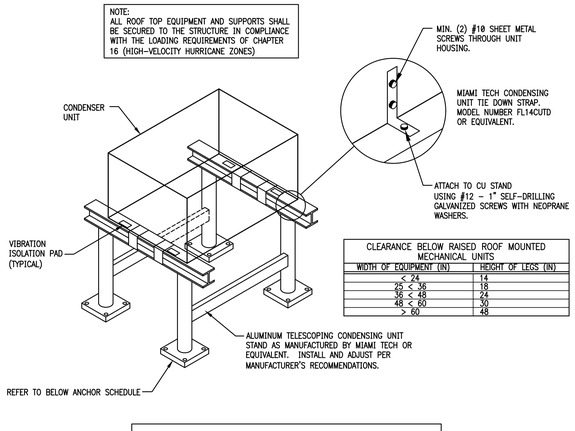

CLEARANCE BELOW RAISED ROOF MOUNTED MECHANICAL UNITS	
WIDTH OF EQUIPMENT (IN)	HEIGHT OF LEGS (IN)
< 24	14
25 < 36	18
36 < 48	24
48 < 60	30
> 60	48

ANCHOR SCHEDULE		
ANCHOR TYPE	HOST STRUCTURE	ANCHOR DESCRIPTION
1	STEEL	⅜"ø SAE GRADE 5 SHEET METAL SCREWS WITH 1"ø MIN. WASHER, TO STRUCTURAL A36 STEEL MEMBERS (3/16" MIN HOST THICKNESS)
2	CONCRETE	⅜"ø CARBON STEEL WEDGE-BOLT CONCRETE ANCHOR WITH 1"ø MIN. WASHER, 2⅜" EMBEDMENT & 6" MIN EDGE DISTANCE, 4 ANCHORS PER BASE PLATE, ONE IN EACH CORNER
3	WOOD	PROVIDE 2" MIN. LAG SCREW TIP TO TUP SPACING & ¾" MIN. WOOD EDGE DISTANCE.
4	STEEL	⅜"ø SAE GRADE 5 THRUBOLT WITH 1"ø MIN. WASHER & NUT, TO STRUCTURAL A36 STEEL MEMBERS (3/16" MIN HOST THICKNESS)

7 NTS CONDENSER RACK DETAIL

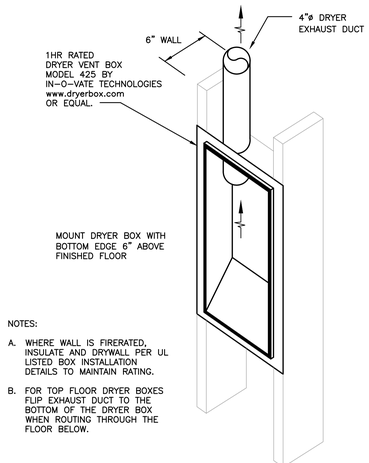

NOTES:

A. WHERE WALL IS FIRERATED, INSULATE AND DRYWALL PER UL LISTED BOX INSTALLATION DETAILS TO MAINTAIN RATING.

B. FOR TOP FLOOR DRYER BOXES FLIP EXHAUST DUCT TO THE BOTTOM OF THE DRYER BOX WHEN ROUTING THROUGH THE FLOOR BELOW.

6 NTS DRYER VENT BOX DETAIL

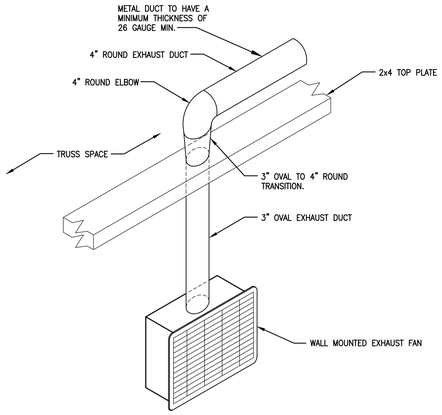

5 NTS WALL MOUNTED EXHAUST FAN DETAIL UNITS

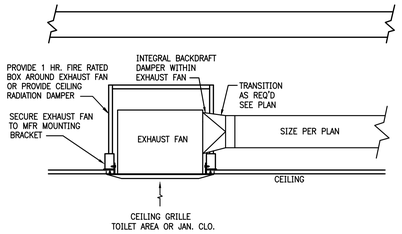

8 NTS CEILING EXHAUST FAN SUPPORT DETAIL FIRE RATED CEILING

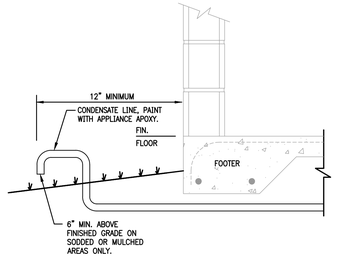

4 NTS CONDENSATE DRAIN TERMINATION DETAIL

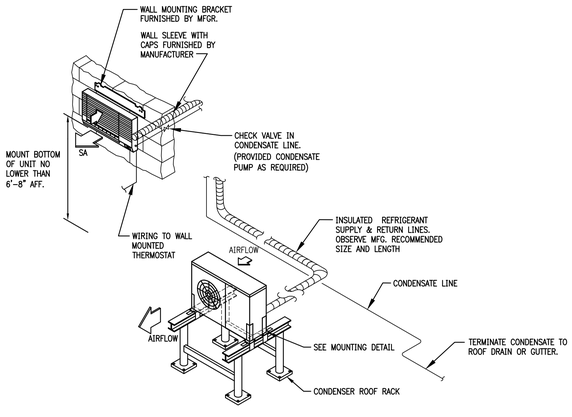

3 NTS WALL MOUNTED SPLIT SYSTEM SUPPORT DETAIL

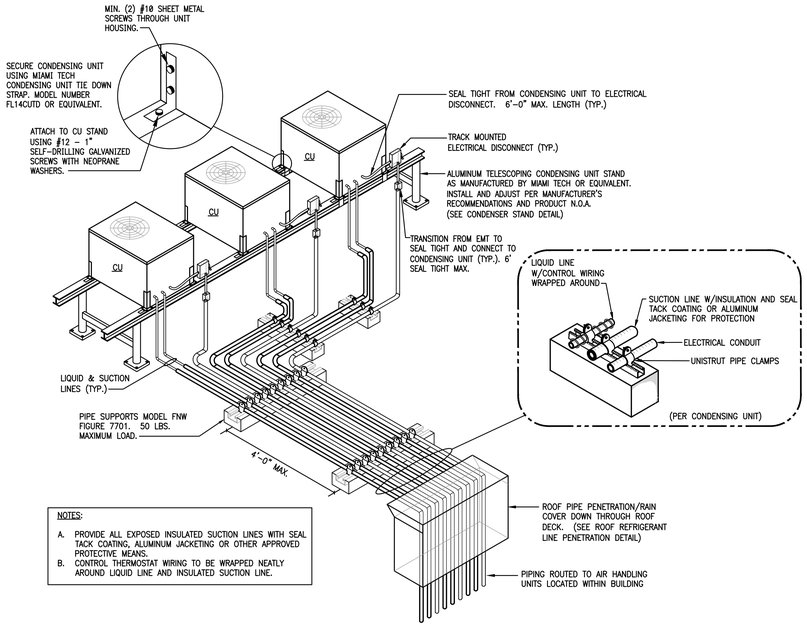

NOTES:

A. PROVIDE ALL EXPOSED INSULATED SUCTION LINES WITH SEAL TACK COATING, ALUMINUM JACKETING OR OTHER APPROVED PROTECTIVE MEANS.

B. CONTROL THERMOSTAT WIRING TO BE WRAPPED NEATLY AROUND LIQUID LINE AND INSULATED SUCTION LINE.

2 NTS ROOF MOUNTED CONDENSING UNIT PIPING DETAIL

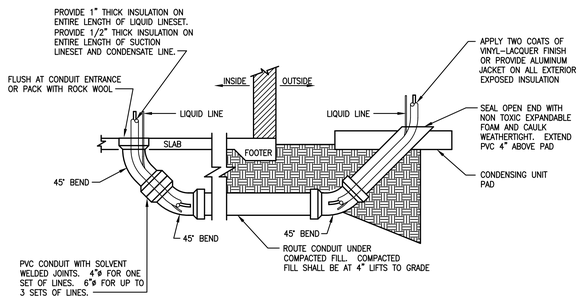

1 NTS REFRIGERANT SLEEVE DETAIL

U.S. DEPARTMENT OF HOUSING AND URBAN DEVELOPMENT

ISSUE HISTORY

No.	Date	Description
1	04/15/22	Permit Submission

REVISION HISTORY

No.	Date	Description

© 2015 These documents and drawings are the property of FUGLEBERG KOCH - ARCHITECTS and may not be used without our consent or written permission.

FUGLEBERG KOCH
2555 Temple Trail, Winter Park, FL 32789 (407) 629-0595
www.fugleberg koch.com AA26002103

CONSULTANT
Joseph, Lawrence & Co Consulting Engineers
1180 HARWOOD AVE. SUITE 3000
ALTAMONTE SPRINGS, FLORIDA 32714
TEL. 321.972.4466
WWW.JLCENG.COM
CA NO. 4050 - E
JLC 22.0023.00

THE MADISON	Drawn: MJR/SMB
HUNTSVILLE, AL	Checked: BLS/AJB
	Approved: BLS/AJB
	Date: 04/15/2022
	Project #: 5722

DETAILS MECHANICAL

M6.01

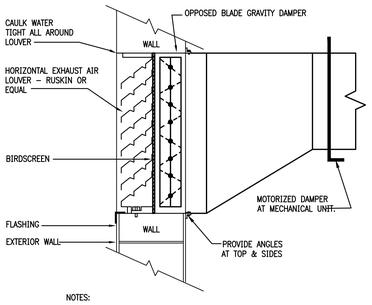

NOTES:

1. PROTECT OPENING PER FLORIDA BUILDING CODE – MECHANICAL SECTION 401.5 AND 401.6

10 NTS SIDEWALL LOUVER DETAIL

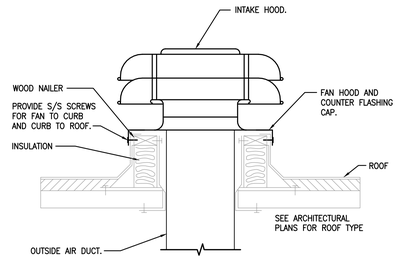

9 NTS OUTSIDE AIR INTAKE DETAIL

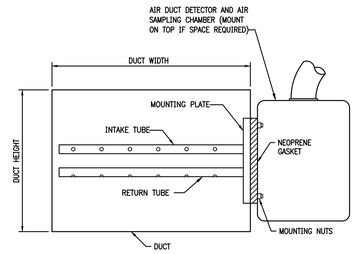

NOTES:

1. INSTALL IN STRICT ACCORDANCE WITH MANUFACTURERS INSTALLATION INSTRUCTIONS.
2. PROVIDE ACCESS DOOR AT SAMPLING TUBES.

8 NTS SMOKE DETECTOR DETAIL

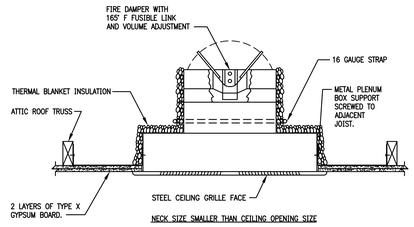

NOTES:

1. DAMPER SHALL BE U.L. CLASSIFIED UNDER U.L. STANDARD 555.
2. THERMAL BLANKET INSULATION SHALL BE U.L. CLASSIFIED UNDER U.L. STANDARD 555.
3. APPLIES TO DIFFUSERS RETURN GRILLES AND TRANSFER GRILLES PENETRATING RATED CEILING.

7 NTS RADIATION DAMPER DETAIL (ATTIC SPACE INSTALLATION)

POTTORFF CFD-521-BT / P522 ASSEMBLY

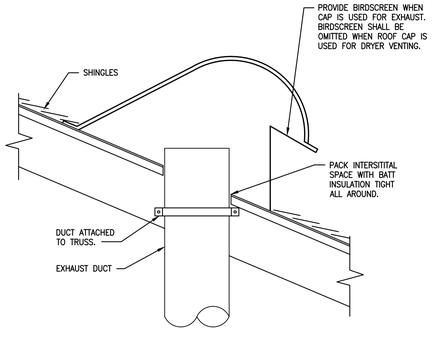

6 NTS ROOF CAP DETAIL

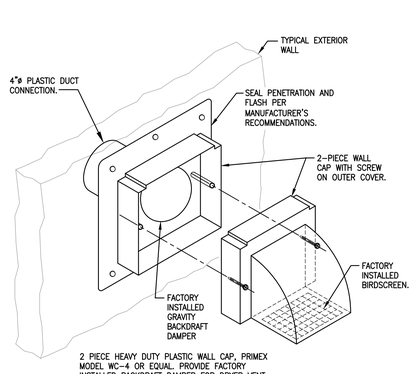

2 PIECE HEAVY DUTY PLASTIC WALL CAP, PRIMEX MODEL WC-4 OR EQUAL. PROVIDE FACTORY INSTALLED BACKDRAFT DAMPER FOR DRYER VENT AND RESTROOM EXHAUST FANS. REMOVE BACKDRAFT DAMPER FOR USE AS OUTSIDE AIR INTAKE. FOR DRYER APPLICATIONS USE THE NO BIRD SCREEN (NS) MODEL. PAINT TO OWNERS SPEC.

5 NTS TYPICAL WALL JACK DETAIL

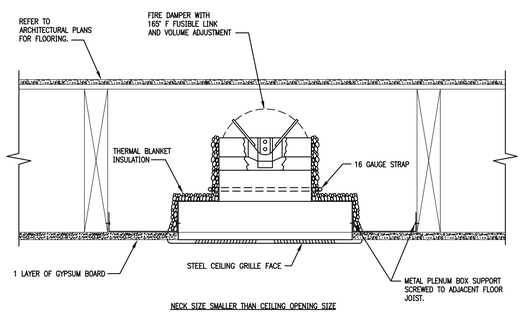

NOTES:

1. DAMPER SHALL BE U.L. CLASSIFIED UNDER U.L. STANDARD 555.
2. THERMAL BLANKET INSULATION SHALL BE U.L. CLASSIFIED UNDER U.L. STANDARD 555.
3. APPLIES TO DIFFUSERS RETURN GRILLES AND TRANSFER GRILLES PENETRATING RATED CEILING.

4 NTS RADIATION DAMPER DETAIL (FLOOR JOIST INSTALLATION)

POTTORFF CFD-521-IP / L521 ASSEMBLY

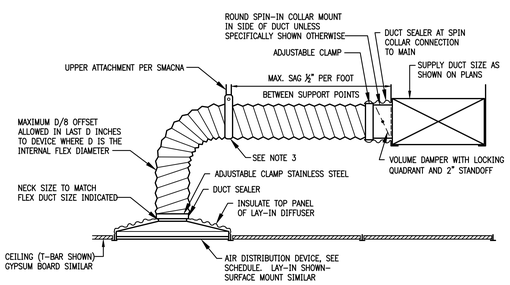

NOTES:

1. EXTEND FLEXIBLE DUCT INSULATION TO DUCT/DIFFUSER PANEL INSULATION AND SEAL WITH MASTIC.
2. MINIMUM 1-1/2" WIDE 22 GAUGE GALVANIZED STRAP HANGER WITH HEMMED EDGES PER SMACNA FIGURE 3-10.
3. FLEXIBLE AIR DUCT SHALL BE FULLY EXTENDED AND NOT COMPRESSED WITH ELBOW RADIUS NO LESS THAN R/D=1.0.

3 NTS FLEXIBLE DUCT DETAIL

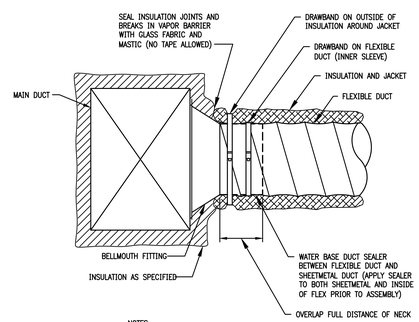

NOTES:

1. TYPICAL FOR: LOW PRESSURE AND HIGH PRESSURE CONNECTION TO MAIN DUCT, FAN TERMINAL UNITS, VARIABLE AIR VOLUME UNITS, AND DIFFUSERS.
2. DRAWBANDS SHALL BE EQUIVALENT TO PANDUIT PLT-H.

2 NTS FLEXIBLE DUCT CONNECTION DETAIL

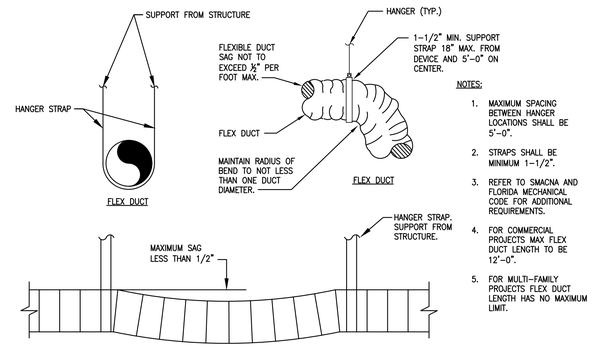

NOTES:

1. MAXIMUM SPACING BETWEEN HANGER LOCATIONS SHALL BE 5'-0".
2. STRAPS SHALL BE MINIMUM 1-1/2".
3. REFER TO SMACNA AND FLORIDA MECHANICAL CODE FOR ADDITIONAL REQUIREMENTS.
4. FOR COMMERCIAL PROJECTS MAX FLEX DUCT LENGTH TO BE 12'-0".
5. FOR MULTI-FAMILY PROJECTS FLEX DUCT LENGTH HAS NO MAXIMUM LIMIT.

1 NTS FLEX DUCT HANGER DETAIL

U.S. DEPARTMENT OF HOUSING AND URBAN DEVELOPMENT

ISSUE HISTORY

No.	Date	Description
1	04/15/22	Permit Submission

REVISION HISTORY

No.	Date	Description

FUGLEBERG KOCH

2555 Temple Trail, Winter Park, FL 32789 (407) 629-9395
www.fuglebergkoch.com AA26002103

CONSULTANT

Joseph, Lawrence & Co
Consulting Engineers
1180 HARWOOD AVE SUITE 3000
ALTAMONTE SPRINGS, FLORIDA 32714
TEL. 321.972.4466
WWW.JLCENG.COM
CA NO. 4050 - E

JLC 22.0023.00

STATE OF FLORIDA BRIAN L. SMITH No. 73885 PROFESSIONAL ENGINEER

Drawn:	MJR/SMB
Checked:	BLS/AJB
Approved:	BLS/AJB
Date:	04/15/2022
Project #	5722

THE MADISON

HUNTSVILLE, AL

DETAILS MECHANICAL

M6.02

© 2015 These documents and the contents thereof are the property of FUGLEBERG KOCH - ADDISON, and are loaned to the recipient for review, comment, or bidding purposes only. Reproduction or transmittal of these documents without the expressed written consent of Fugleberg Koch is prohibited by law.

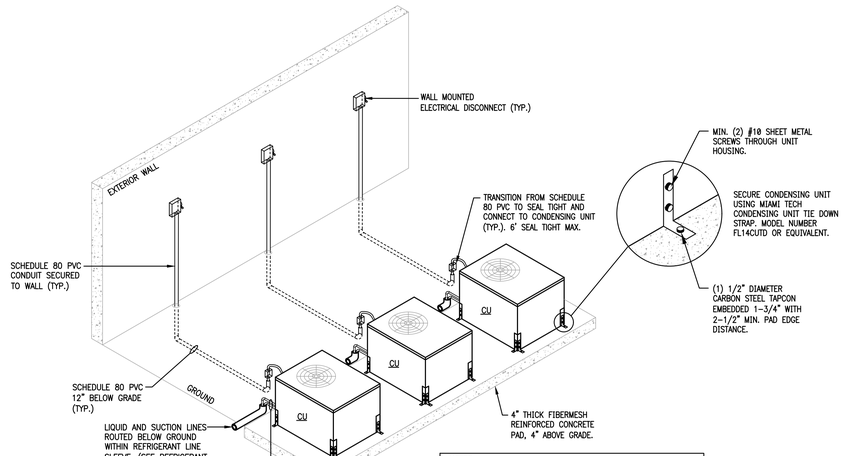

NOTES:

A. PROVIDE ALL EXPOSED INSULATED SUCTION LINES WITH SEAL TACK COATING, ALUMINUM JACKETING OR OTHER APPROVED PROTECTIVE MEANS.
B. CONTROL THERMOSTAT WIRING TO BE WRAPPED NEATLY AROUND LIQUID LINE AND INSULATED SUCTION LINE.

6 GROUND MOUNTED CONDENSING UNIT PIPING DETAIL (REFRIGERANT & ELECTRICAL BELOW GRADE)

NTS

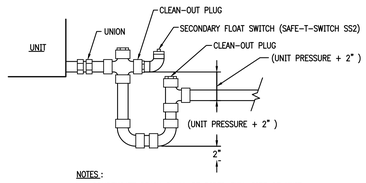

NOTES :

1. CONDENSATE DRAIN SHALL BE PIPED FULL SIZE OF UNIT CONNECTION.
2. CONDENSATE PANS SHALL BE INSTALLED WITH ADEQUATE PITCH TO ENSURE POSITIVE DRAINAGE OF ACCUMULATED CONDENSATE.
3. TRAP CONDENSATE AND DISCHARGE PER PLAN.

5 CONDENSATE DRAIN DETAIL

NTS

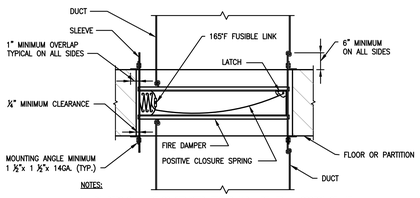

NOTES:

1. DAMPERS SHALL BE CONSTRUCTED, TESTED AND LABELLED IN ACCORDANCE WITH UNDERWRITERS LABORATORIES SAFETY STANDARD 555 FOR DYNAMIC SYSTEMS AND SHALL BE PROVIDED WITH CLOSURE SPRINGS.
2. INSTALLATION SHALL BE IN STRICT ACCORDANCE WITH THE MANUFACTURER'S INSTRUCTIONS.
3. SECURE MOUNTING ANGLES TO SLEEVE AT A MAXIMUM 6" ON CENTER.
4. CLEARANCE BETWEEN FIRE DAMPER SLEEVE AND OPENING SHALL BE ¼" PER FOOT OF HEIGHT (OR WIDTH) UNLESS OTHERWISE STATED IN THE LISTING OF THE ASSEMBLY.
5. PROVIDE ACCESS PANEL IN DUCT AT A POINT ADJACENT TO FUSIBLE LINKAGE.

4 FIRE DAMPER DETAIL

NTS

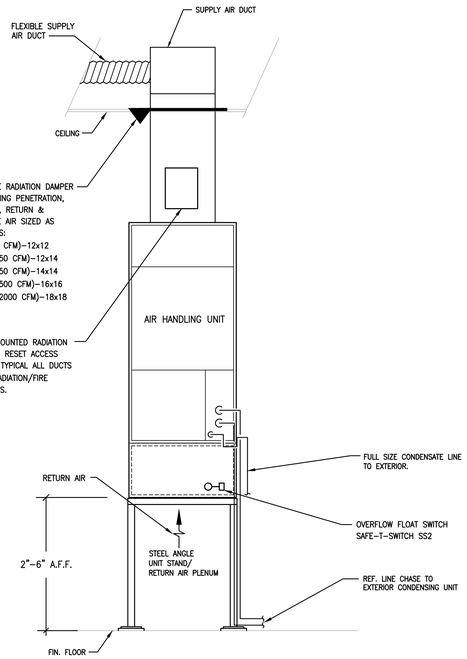

3 VERTICAL AHU DETAIL (UNIT 3C)

NTS

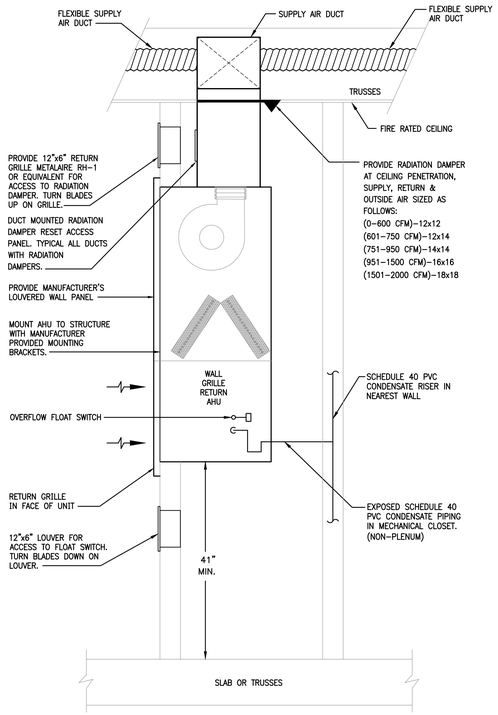

2 THRU WALL MOUNTED AHU DETAIL

NTS

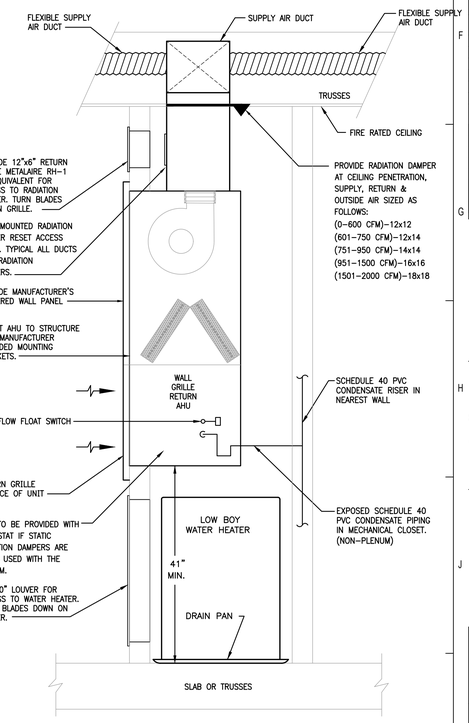

1 CLOSET MOUNTED AHU DETAIL UNITS

NTS

U.S. DEPARTMENT OF HOUSING AND URBAN DEVELOPMENT

ISSUE HISTORY

No.	Date	Description
1	04/15/22	Permit Submission

REVISION HISTORY

No.	Date	Description

FUGLEBERG KOCH
2555 Temple Trail, Winter Park, FL 32789 (407) 629-0595
www.fuglebergkoch.com AA26002103

CONSULTANT
Joseph, Lawrence & Co Consulting Engineers
1180 HARWOOD AVE. SUITE 3000
ALTAMONTE SPRINGS, FLORIDA 32714
TEL: 321.972.4466
WWW.JLCENG.COM
CA NO. 4050 - E

JLC 22.0023.00

A. B. JACOBS No. 53885 PROFESSIONAL ENGINEER STATE OF FLORIDA

THE MADISON	Drawn: MJR/SMB
	Checked: BLS/AJB
	Approved: BLS/AJB
HUNTSVILLE, AL	Date: 04/15/2022
	Project #: 5722

DETAILS MECHANICAL

M6.03

© 2015 These documents and their contents are the property of FUGLEBERG KOCH - ARCHITECTS, and are not to be used on any other project without written consent of Fugleberg Koch is prohibited by law.

System No. F-C-8014

FC 8014

F Rating — 1 Hr
T Rating — 0 Hr

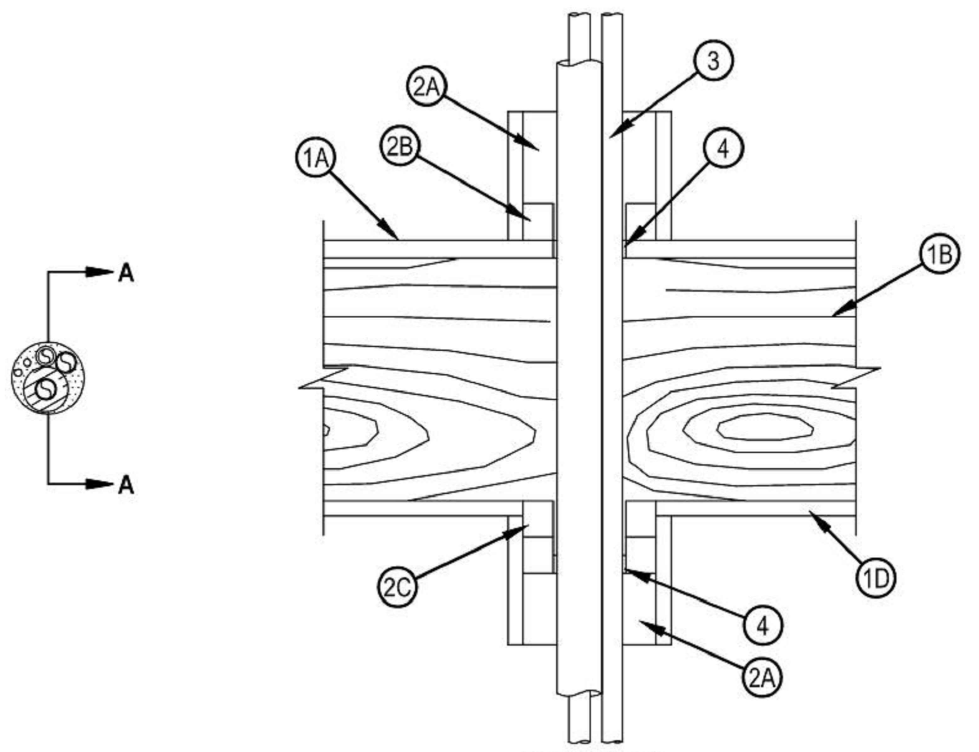

SECTION A-A

1. Floor — Ceiling Assembly — The 1 hr fire-rated wood joist floor-ceiling assembly shall be constructed of the materials and in the manner specified in the individual L500 Series Floor-Ceiling Designs in the UL Fire Resistance Directory, as summarized below:
   - A. Floor System — Lumber or plywood subfloor with finish floor of lumber, plywood or Floor Topping Mixture* as specified in individual Floor-Ceiling Design. Max diam of floor opening is 3 in.
   - B. Joists — Nom 10 in. deep (or deeper) lumber, steel or combination lumber and steel joists, trusses or Structural Wood Members* with bridging as required and with end firestopped.
   - C. Gypsum Board* — Nom 5/8 in. thick as specified in the individual Floor-Ceiling Design. Max diam of openings is 3 in.
2. Chase Wall — (Optional) - The through penetrant (Item 3) may be routed through a 1 hr fire-rated single, double or staggered wood stud/gypsum wallboard chase wall shall be constructed of the materials and in the manner specified in the individual U300 Series Wall and Partition Designs in the UL Fire Resistance Directory and shall include the following construction features:
   - A. Studs — Nom 2 by 6 in. or double nom 2 by 4 in. lumber studs.
   - B. Sole Plate — Nom 2 by 6 in. or parallel 2 by 4 in. lumber plates, tightly butted.
   - C. Top Plate — The double top plate shall consist of two nom 2 by 6 in. or two sets of parallel 2 by 4 in. lumber plates, tightly butted. Max diam of openings is 3 in.
   - D. Gypsum Board* — Thickness, type, number of layers and fasteners shall be as specified in the individual Wall and Partition Design.

Hilti Firestop Systems

Reproduced by HILTI, Inc. Courtesy of
Underwriters Laboratories, Inc.
September 18, 2007

CLASSIFIED UL

Page: 1 of 2

System No. F-C-7013

FC 7013

CLASSIFIED C UL US
Classified by Underwriters Laboratories, Inc. to UL 1479 and CAN/ULC-S115

ANSI/UL1479 (ASTM E814)	CAN/ULC S115
F Rating — 1 Hr	F Rating — 1 Hr
T Rating — 0 Hr	FT Rating — 0 Hr
	FH Rating — 1 Hr
	FTH Rating — 0 Hr

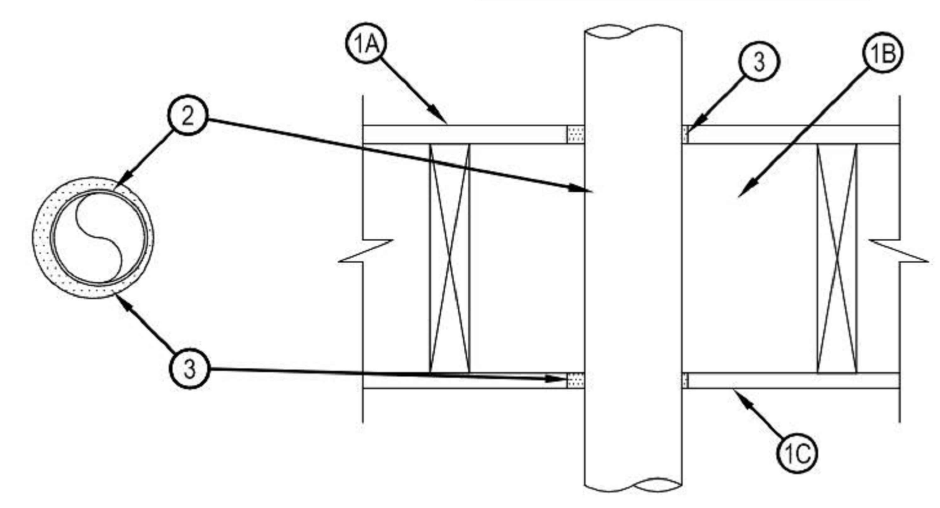

SECTION A-A

1. Floor-Ceiling Assembly — The 1 hr fire-rated solid or trussed lumber joist floor-ceiling assembly shall be constructed of the materials and in the manner specified in the individual L500 Series Floor-Ceiling Designs in the UL Fire Resistance Directory. The general construction features of the floor-ceiling assembly are summarized below:
   - A. Flooring System — Lumber or plywood subfloor with finish floor of lumber, plywood or Floor Topping Mixture* as specified in the individual Floor-Ceiling Design. Max diam of opening shall be 5-1/4 in. (133 mm).
   - B. Wood Joist* — Nom 10 in. (254 mm) deep (or deeper) lumber, steel or combination lumber and steel joists, trusses or Structural Wood Members* with bridging as required and with ends firestopped.
   - C. Gypsum Board* — Nom 4 ft (1.2 m) wide by 5/8 in. (16 mm) thick as specified in the individual Floor-Ceiling Design. Max diam of opening shall be 5-1/4 in. (133 mm).

1.1 Chase Wall — (Not shown, Optional) The through penetrants (Item 2) may be routed through a 1 hr fire-rated single, double or staggered wood stud/gypsum wallboard chase wall having a fire rating consistent with that of the floor-ceiling assembly. The chase wall shall be constructed of the materials and in the manner specified in the individual U300 Series Wall and Partition Designs in the UL Fire Resistance Directory and shall include the following construction features:
   - A. Studs — Nom 2 by 6 in. (51 by 152 mm) lumber or double nom 2 by 4 in. (51 by 102 mm) lumber studs.
   - B. Sole Plate — Nom 2 by 6 in. (51 by 152 mm) lumber or parallel 2 by 4 in. (51 by 102 mm) lumber plates, tightly butted. Max diam of opening shall be 5-1/4 in.
   - C. Top Plate — The double top plate shall consist of two nom 2 by 6 in. (51 by 152 mm) lumber plates or two sets of nom 2 by 4 in. (51 by 102 mm) lumber plates tightly butted. Max diam of opening is 5-1/4 in. (133 mm).
   - D. Gypsum Board* — Thickness, type, number of layers and fasteners shall be as specified in Individual Wall and Partition Design.

Hilti Firestop Systems

Reproduced by HILTI, Inc. Courtesy of
Underwriters Laboratories, Inc.
January 20, 2015

Page: 1 of 2

System No. W-L-7017

WL 7017

CLASSIFIED C UL US
Classified by Underwriters Laboratories, Inc. to UL 1479 and CAN/ULC-S115

ANSI/UL1479 (ASTM E814)	CAN/ULC S115
F Rating — 1 Hr	F Rating — 1 Hr
T Rating — 0 Hr	FT Rating — 0 Hr
	FH Rating — 1 Hr
	FTH Rating — 0 Hr

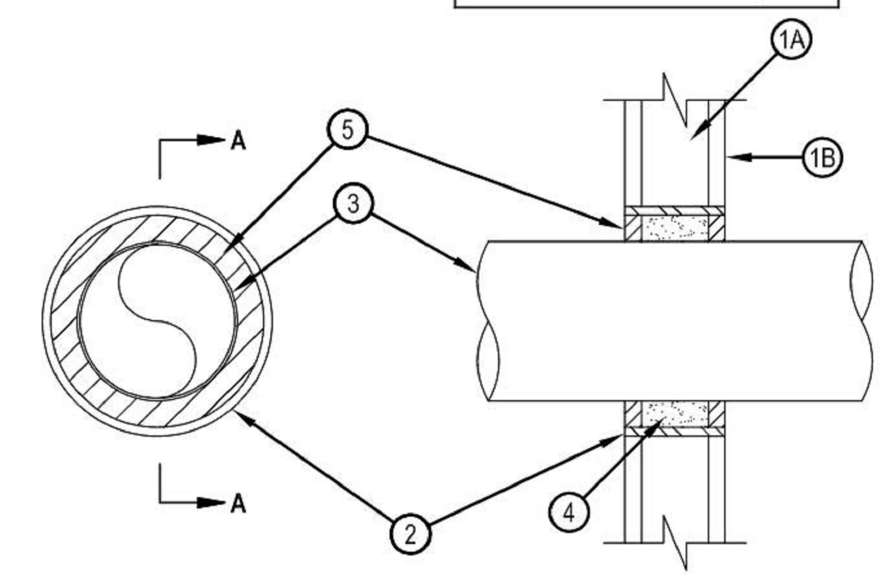

SECTION A-A

1. Wall Assembly — The fire-rated gypsum wallboard/stud wall assembly shall be constructed of the materials and in the manner described in the individual U300, U400, V400 or W400 Series Wall and Partition Designs in the UL Fire Resistance Directory and shall include the following construction features:
   - A. Studs — Wall framing may consist of either wood studs or steel channel studs. Wood studs to consist of nom 2 by 4 in. (51 by 102 mm) lumber spaced 16 in. (406 mm) OC. Steel studs to be min 2-1/2 in. (64 mm) wide and spaced max 24 in. (610 mm) OC.
   - B. Gypsum Board* — One layer of nom 5/8 in. (16 mm) thick gypsum board, as specified in the individual Wall and Partition Design. Max diam of opening is 8-5/8 in. (219 mm).
2. Metallic Sleeve — Nom 8 in. (203 mm) diam (or smaller) Schedule 40 (or heavier) steel sleeve cast into wall assembly with joint compound and installed flush with wall surfaces.
3. Air Duct — Nom 6 in. (152 mm) diam (or smaller) prefabricated No. 28 MSG galv sheet metal duct. A min 1/2 in. (13 mm) to max 1-1/2 in. (38 mm) annular space is required within the firestop system. Duct to be rigidly supported on both sides of wall assembly.
4. Forming Material* — Foamed plastic forming material foamed into opening as a permanent form. Forming material to be recessed from both surfaces of wall as required to accommodate the required thickness of fill material.
   HILTI CONSTRUCTION CHEMICALS, DIV OF HILTI INC — CF812 or CF-AS CJP Foam Sealant
5. Fill, Void or Cavity Material* — Min 5/8 in. (16 mm) thickness of fill material applied within annulus, flush with both surfaces of wall.
   HILTI CONSTRUCTION CHEMICALS, DIV OF HILTI INC — FS-ONE Sealant or FS-ONE MAX Intumescent Sealant

* Indicates such products shall bear the UL or cUL Certification Mark for jurisdictions employing the UL or cUL Certification (such as Canada), respectively.

Hilti Firestop Systems

Reproduced by HILTI, Inc. Courtesy of
Underwriters Laboratories, Inc.
January 26, 2015

System No. F-C-8014

FC 8014

F Rating — 1 Hr
T Rating — 0 Hr

3. Through-Penetrants — Pipes, conduits, tubing and cables to be bundled and centered in the opening. The space between penetrants and the periphery of the opening shall be min 1/4 in. to max 3/4 in. Penetrants to be rigidly supported on both sides of the floor-ceiling assembly.
   - A. Metallic Pipes — A max of two metallic pipes, conduits or tubing, (one 3/4 in. diam and one 1/2 in. diam) to be installed within the firestop system. The following types and sizes of metallic pipes, conduits or tubing may be used:
   - A1. Steel Pipe — Nom 3/4 in. diam (or smaller) Schedule 5 (or heavier) steel pipe.
   - A2. Conduit — Nom 3/4 in. diam (or smaller) steel electrical metallic tubing or steel conduit.
   - A3. Copper Tubing — Nom 3/4 in. diam (or smaller) Type L (or heavier) copper tubing.
   - A4. Copper Pipe — Nom 3/4 in. diam (or smaller) Regular (or heavier) copper pipe.
   - B. Nonmetallic Pipes — A max of one nonmetallic pipe to be installed within the firestop system. The following types and sizes of nonmetallic pipes may be used:
   - B1. Polyvinyl Chloride (PVC) Pipe — Nom 1/2 in. diam (or smaller) Schedule 40 solid core PVC pipe for use in closed (process or supply) or vented (drain, waste or vent) piping systems.
   - B2. Chlorinated Polyvinyl Chloride (CPVC) Pipe — Nom 1/2 in. diam (or smaller) SDR17 CPVC pipe for use in closed (process or supply) or vented (drain, waste or vent) piping systems.
   - C. Cables — A max of two 4/C No. 18 AWG (or smaller) thermostat cables with PVC insulation and PVC/nylon jacketing material.
   - D. Tube Insulation — Plastic+ — Nom 1/2 in. thick acrylonitrile butadiene/polyvinyl chloride (AB/PVC) flexible foam furnished in the form of tubing. Tube insulation to be installed on a max of one metallic pipe or tubing.
     See Plastics+ (QMFZ2) category in the Plastics Recognized Component Directory for names of manufacturers. Any Recognized Component tube insulation material meeting the above specifications and having a UL 94 Flammability Classification of 94-5VA may be used.
4. Fill, Void or Cavity Material* — Sealant — Min 3/4 in. thickness of fill material applied within the annulus, flush with top surface of floor or sole plate. Min 5/8 in. thickness of fill material applied within the annulus, flush with the bottom surface of the ceiling or lower top plate.
   HILTI CONSTRUCTION CHEMICALS, DIV OF
   HILTI INC — FS — ONE Sealant

*Bearing the UL Classification Marking
+Bearing the UL Recognized Component Mark

Hilti Firestop Systems

Reproduced by HILTI, Inc. Courtesy of
Underwriters Laboratories, Inc.
September 18, 2007

CLASSIFIED UL

Page: 2 of 2

System No. F-C-7013

FC 7013

2. Steel Duct — Nom 4 in. (102 mm) diam (or smaller) No. 28 gauge (or heavier) steel duct to be installed either concentrically or eccentrically within the firestop system. The annular space between duct and periphery of opening shall be min of 1/4 in. (6 mm) to max 3/4 in. (19 mm). Steel duct to be rigidly supported on both sides of floor-ceiling assembly.
3. Fill, Void or Cavity Materials*-Sealant — Min 3/4 in. (19 mm) thickness of sealant applied within the annular space, flush with top surface of floor or sole plate. Min 5/8 in. (16 mm) thickness of sealant applied within annular space, flush with bottom surface of gypsum board or lower top plate.
   HILTI CONSTRUCTION CHEMICALS, DIV OF HILTI INC — FS-ONE Sealant or FS-ONE MAX Intumescent Sealant

* Indicates such products shall bear the UL or cUL Certification Mark for jurisdictions employing the UL or cUL Certification (such as Canada), respectively.

Hilti Firestop Systems

Reproduced by HILTI, Inc. Courtesy of
Underwriters Laboratories, Inc.
January 20, 2015

Page: 2 of 2

U.S. DEPARTMENT OF HOUSING AND URBAN DEVELOPMENT

ISSUE HISTORY

No.	Date	Description
1	04/15/22	Permit Submission

REVISION HISTORY

No.	Date	Description

FUGLEBERG KOCH
2555 Temple Trail, Winter Park, FL 32789 (407) 629-0595
www. fuglebergkoch.com AA26002103

CONSULTANT

Joseph, Lawrence & Co
Consulting Engineers
1180 HARWOOD AVE. SUITE 3000
ALTAMONTE SPRINGS, FLORIDA 32714
TEL: 321.972.4466
WWW.JLCENG.COM
CA NO. 4050 - E

JLC 22.0023.00

ALABAMA LICENSED No. 33858 PROFESSIONAL ENGINEER ADAM J. BARNEY

THE MADISON	Drawn:	MJR/SMB
	Checked:	BLS/AJB
	Approval:	BLS/AJB
	Date:	04/15/2022
HUNTSVILLE, AL	Project #:	5722

DETAILS
MECHANICAL

M6.04

© 2018 These documents and their contents are the property of FUGLEBERG KOCH - AA26002103, and are issued only for the specific project noted on these drawings. Any reproductions, revisions, or modifications of these documents without the expressed written consent of Fugleberg Koch is prohibited by law.

System No. W-L-7042

WL 7042

Classified by Underwriters Laboratories, Inc. to UL 1479 and CAN/ULC-S115

ANSI/UL1479 (ASTM E814)	CAN/ULC S115
F Ratings - 1 and 2 Hr (See Items 1 and 3)	F Ratings - 1 and 2 Hr (See Items 1 and 3)
T Rating - 0 Hr	FT Rating - 0 Hr
	FH Ratings - 1 and 2 Hr (See Items 1 and 3)
	FTH Rating - 0 Hr

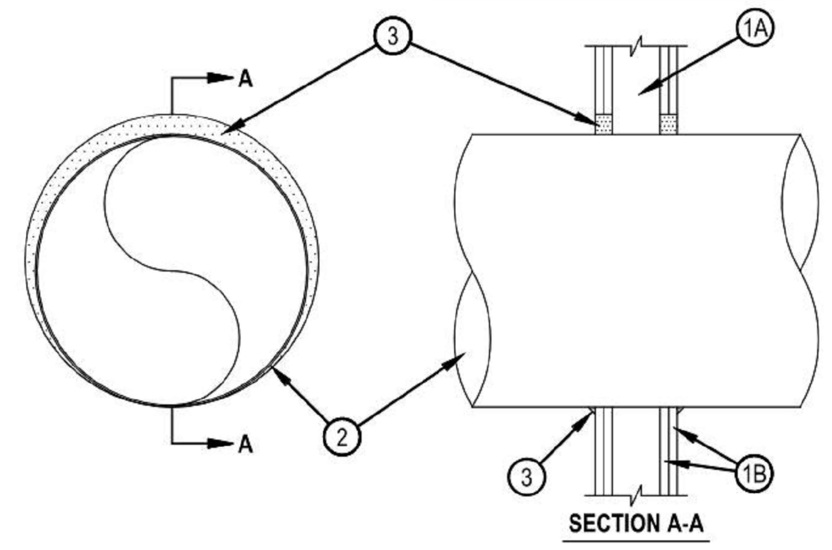

Hilti Firestop Systems

Reproduced by HILTI, Inc. Courtesy of Underwriters Laboratories, Inc. October 12, 2017

System No. W-L-7040

WL 7040

Classified by Underwriters Laboratories, Inc. to UL 1479 and CAN/ULC-S115

ANSI/UL1479 (ASTM E814)	CAN/ULC S115
F Ratings - 1 and 2 Hr (See Items 1 and 3)	F Ratings - 1 and 2 Hr (See Items 1 and 3)
T Rating - 0 Hr	FT Rating - 0 Hr
L Rating at Ambient - Less Than 1 CFM/sq ft	FH Ratings - 1 and 2 Hr (See Items 1 and 3)
L Rating at 400°F - Less Than 1 CFM/sq ft	FTH Rating - 0 Hr
	L Rating at Ambient - Less Than 1 CFM/sq ft
	L Rating at 400°F - Less Than 1 CFM/sq ft

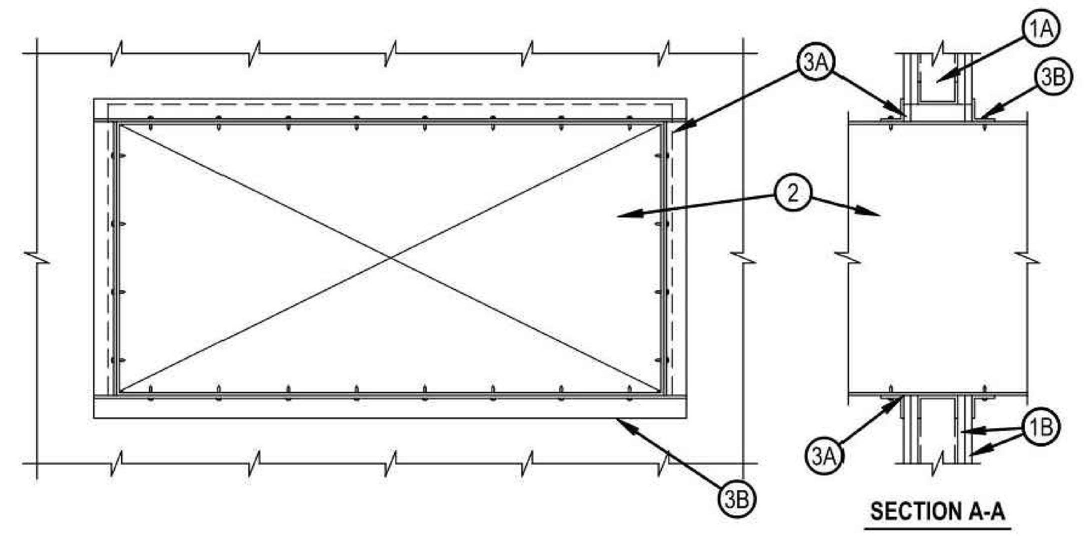

1. Wall Assembly — The fire-rated gypsum wallboard/stud wall assembly shall be constructed of the materials and in the manner specified in the individual U300, U400, V400 or V400 Series Wall and Partition Designs in the Fire Resistance Directory and shall include the following construction features:
   A. Studs — Wall framing may consist of either wood studs or steel channel studs. Wood studs to consist of nom 2 by 4 in. (61 by 102 mm) lumber spaced 16 in. (406 mm) OC. Steel studs to be min 2-1/2 in. (64 mm) wide and spaced max 24 in. (610 mm). Additional framing members shall be used to completely frame around opening.
   B. Gypsum Board* — Nom 5/8 in. (16 mm) thick with square or tapered edges. The gypsum wallboard type, number of layers and sheet orientation shall be as specified in the individual Wall and Partition Design Number. Max area of opening is 1300 in.^{2} (0.84 m^2) with the dimension of 50 in. (1.27 m).
   The hourly F and FH Ratings of the firestop system are equal to the hourly fire rating of the wall assembly in which it is installed.

2. Steel Duct — Nom 24 in. by 48 in. (610 by 1219 mm) (or smaller) No. 24 gauge (or heavier) galv steel duct to be installed within the firestop system. The annular space shall be min 0 (point contact) in. to a max 2 in. (51 mm) Duct to be rigidly supported on both sides of the wall assembly.

Hilti Firestop Systems

Reproduced by HILTI, Inc. Courtesy of Underwriters Laboratories, Inc. September 16, 2015

System No. W-L-7153

WL 7153

Classified by Underwriters Laboratories, Inc. to UL 1479 and CAN/ULC-S115

ANSI/UL1479 (ASTM E814)	CAN/ULC S115
F Ratings - 1 and 2 Hr (See Item 1)	F Ratings - 1 and 2 Hr (See Item 1)
T Rating - 1/2 Hr	FT Rating - 1/2 Hr
	FH Ratings - 1 and 2 Hr (See Item 1)
	FTH Rating - 1/2 Hr

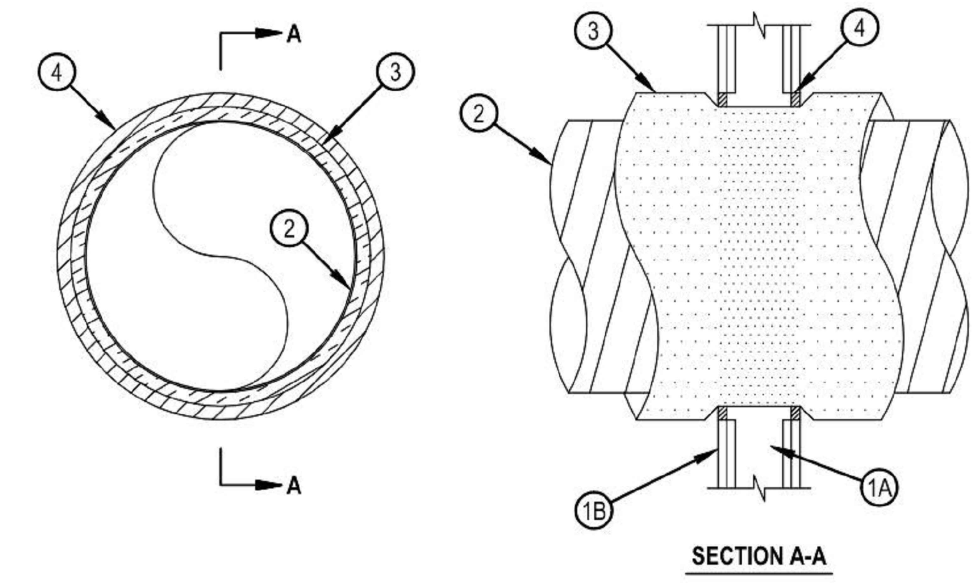

1. Wall Assembly — The 1 or 2 hr fire-rated gypsum wallboard/stud wall assembly shall be constructed of the materials and in the manner described in the individual U400, V400 or W400 Series Wall or Partition Design in the UL Fire Resistance Directory and shall include the following construction features:
   A. Studs — Wall framing shall consist of channel studs. Steel studs to be min 3-1/2 in. (89 mm) wide and spaced max 24 in. (610 mm) OC.
   B. Wallboard, Gypsum* — 5/8 in. (16 mm) thick, 4 ft (122 cm) wide with square or tapered edges. The gypsum board type, thickness, number of layers, fastener type and sheet orientation shall be as specified in the individual Wall and Partition Design in the UL Fire Resistance Directory. Max diam of opening is 24 in. (610 mm).
   The hourly F and FH Ratings of the firestop system are equal to the hourly fire rating of the wall assembly in which it is installed.

Hilti Firestop Systems

Reproduced by HILTI, Inc. Courtesy of Underwriters Laboratories, Inc. November 15, 2017

System No. W-L-7042

WL 7042

1. Wall Assembly — The 1 or 2 hr fire rated wallboard/stud wall assembly shall be constructed of the materials and in the manner specified in the individual U300, U400, V400 or W400 Series Wall and Partition Designs in the UL Fire Resistance Directory and shall include the following construction features.
   A. Studs — Wall framing may consist of either wood studs or steel channel studs. Wood studs to consist of nom 2 by 4 in. (51 by 102 mm) lumber spaced 16 in. (406 mm) OC. Steel studs to be min 2-1/2 in. (64 mm) wide and spaced 24 in. (610 mm) OC. Additional framing members shall be used to completely frame the opening for all ducts greater than 20 in. (502 mm) diam.
   B. Gypsum Board* — For 1 hr assembly, one layer of min 5/8 in. (16 mm) thick wallboard as required in the individual Wall and Partition Design. For 2 hr assembly, two layers of min 5/8 in. (16 mm) thick wallboard as required in the individual Wall and Partition Design. Max diam of opening is 14-1/2 in. (368 mm) for wood stud walls and 25-1/2 in. (648 mm) for steel stud walls.
   The hourly F and FH Ratings of the firestop system are equal to the hourly fire rating of the wall assembly in which it is installed.
2. Through Penetrant — Galv steel duct to be installed concentrically or eccentrically within the firestop system. The annular space between the duct and periphery of opening shall be 0 in. (0 mm, point contact) and max 1-1/2 in. (64 mm) Duct to be rigidly supported on both sides of wall assembly.
   A. Spiral Wound HVAC Duct — Nom 24 in. (610 mm) diam (or smaller) No. 28 MSG (or heavier) galv steel spriral wound duct.
   B. Sheet Metal Duct — Nom 12 in. (305 mm) diam (or smaller) No. 28 MSG (or heavier) galv sheet steel duct.
3. Fill, Void or Cavity Material*—Sealant — Min 5/8 in. (16 mm) and 1-1/4 in. (32 mm) thickness of fill material applied within annulus, flush with both surfaces of wall assembly for 1 and 2 hr F Ratings, respectively. When FS-ONE Max is used, min 5/8 in. (16mm) thickness for both 1 and 2 hr F Ratings. At the point contact location between duct and wallboard, a min 1/2 in. (13 mm) diam bead of sealant shall be applied at the wallboard/duct interface on both surfaces of wall assembly.
   HILTI CONSTRUCTION CHEMICALS, DIV OF HILTI INC — CP601S Elastomeric Firestop Sealant, FS-ONE Sealant, FS-ONE MAX Intumescent Sealant or CP606 Flexible Firestop Sealant

* Indicates such products shall bear the UL or cUL Certification Mark for jurisdictions employing the UL or cUL Certification (such as Canada), respectively.

Hilti Firestop Systems

Reproduced by HILTI, Inc. Courtesy of Underwriters Laboratories, Inc. October 12, 2017

System No. W-L-7040

WL 7040

3. Firestop System — The firestop system shall consist of the following:
   A. Fill, Void or Cavity Material*—Sealant — Min 5/8 in. (16 mm) thickness of fill material applied within annulus flush with both surfaces of wall. At point contact location, a min 1/2 in. (13 mm) diam bead of fill material shall be applied to the wall/duct interface on both surfaces of wall. HILTI CONSTRUCTION CHEMICALS, DIV OF HILTI INC — FS-ONE Sealant, FS-ONE MAX Intumescent Sealant, CP601S Elastomeric Firestop Sealant or CP606 Flexible Sealant
   B. Steel Retaining Angle — No. 18 MSG (0.048 in.) galv steel angles cut to fit contour of duct with a 2 in. overlap on the duct and a min 1 in. overlap on the gypsum board assembly on both sufaces of wall. 2 in. leg of angle secured to duct with min No. 8 by 3/4 in. long sheet metal screws, spaced a max of 6 in. OC. When bead of fill material is used at joint contact locations, angles shall be installed prior to full material curing.

* Indicates such products shall bear the UL or cUL Certification Mark for jurisdictions employing the UL or cUL Certification (such as Canada), respectively.

Hilti Firestop Systems

Reproduced by HILTI, Inc. Courtesy of Underwriters Laboratories, Inc. September 16, 2015

System No. W-L-7153

WL 7153

2. Steel Duct — Galv steel duct to be installed concentrically or eccentrically within the firestop system. Duct to be rigidly supported on both sides of wall assembly.
   A. Spiral Wound HVAC Duct — Nom 20 in. (508 mm) diam (or smaller) No. 24 MSG (or heavier) galv steel spriral wound duct.
   B. Sheet Metal Duct — Nom 12 in. (305 mm) diam (or smaller) No. 28 MSG (or heavier) galv sheet steel duct.
3. Duct Insulation* — Nom 1-1/2 in. or 2 in. (38 or 51 mm) thick glass fiber batt or blanket (min 3/4 pcf or 56 kg/m3) jacketed on the outside with a foil-scrim-kraft facing. Longitudinal and transverse joints sealed with aluminum foil tape. During the installation of the fill material, the batt or blanket shall be compressed 50% such that the annular space within the firestop system shall be min 1/4 in. (6 mm) to max 1-1/2 in. (38 mm). See Batts and Blankets - (BKNV) category in the Building Materials Directory for names of manufacturers. Any batt or blanket meeting the above specifications and bearing the UL Classification Marking with a Flame Spread Index of 25 or less and a Smoke Developed Index 50 or less may be used.
4. Fill, Void or Cavity Material* — Sealant — Min 5/8 in. (16 mm) thickness of fill material applied within annulus, flush with both surfaces of wall. If voids develop after the fill materials cures, the voids shall be sealed with additional fill material.
   HILTI CONSTRUCTION CHEMICALS, DIV OF HILTI INC — FS-ONE Sealant or FS-ONE MAX Intumescent Sealant

* Indicates such products shall bear the UL or cUL Certification Mark for jurisdictions employing the UL or cUL Certification (such as Canada), respectively.

Hilti Firestop Systems

Reproduced by HILTI, Inc. Courtesy of Underwriters Laboratories, Inc. November 15, 2017

ISSUE HISTORY

No.	Date	Description
1	04/15/22	Permit Submission

REVISION HISTORY

No.	Date	Description

FUGLEBERG KOCH
2555 Temple Trail, Winter Park, FL 32789 (407) 629-0595
www. fuglebergkoch.com AA26002103

CONSULTANT
Joseph, Lawrence & Co
Consulting Engineers
1180 HARWOOD AVE. SUITE 3000
ALTAMONTE SPRINGS, FLORIDA 32714
TEL: 321.972.4466
WWW.JLCENG.COM
CA NO. 4050 - E

JLC 22.0023.00

ALABAMA LICENSED No. 33858 PROFESSIONAL ENGINEER ADAM J. BARNEY

THE MADISON	Drawn:	MJR/SMB
	Checked:	BLS/AJB
	Approval:	BLS/AJB
	Date:	04/15/2022
HUNTSVILLE, AL	Project #:	5722

DETAILS
MECHANICAL

M6.05

© 2018 These documents and their contents are the property of FUGLEBERG KOCH - AA26002103, and are issued only for the specific project noted on these drawings. Any reproductions, revisions, or modifications of these documents without the expressed written consent of Fugleberg Koch is prohibited by law.

System No. W-L-7059

WL 7059

Classified by Underwriters Laboratories, Inc. to UL 1479 and CAN/ULC-S115

ANSI/UL1479 (ASTM E814)	CAN/ULC S115
F Ratings - 1 and 2 Hr (See Item 1)	F Ratings - 1 and 2 Hr (See Item 1)
T Rating - 1/2 and 3/4 Hr (See Item 1)	FT Rating - 1/2 and 3/4 Hr(See Item 1)
	FH Ratings - 1 and 2 Hr (See Item 1)
	FTH Rating - 1/2 and 3/4 Hr (See Item 1)

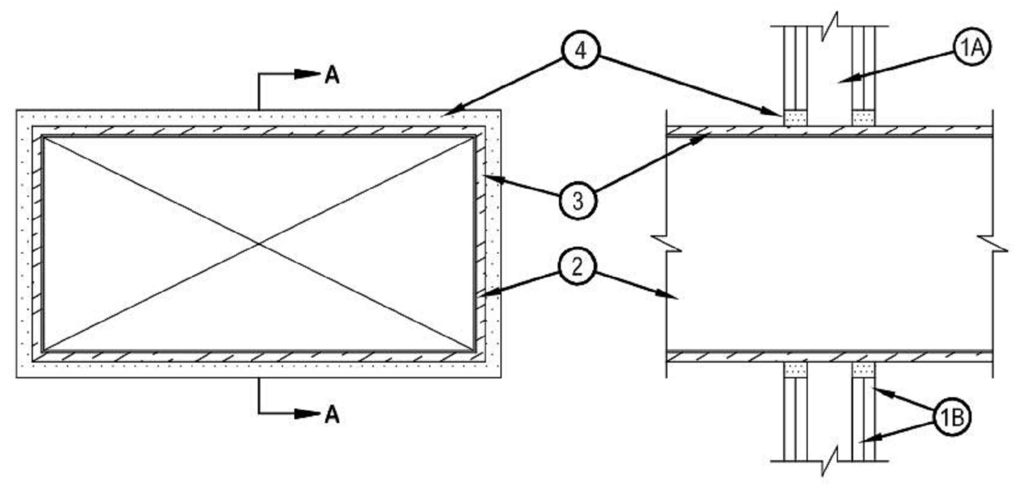

SECTION A-A

1. Wall Assembly — The 1 or 2 hr fire-rated gypsum wallboard/stud wall assembly shall be constructed of the materials and in the manner described In the Individual U400, V400 or W400 Series Wall or Partition Design In the UL Fire Resistance Directory and shall Include the following construction features:
   A. Studs — Wall framing shall consist of channel studs. Steel studs to be min 2-1/2 in. (64 mm) wide and spaced max 24 in. (610 mm) OC. The opening in the wall to accommodate the steel duct (Item 2) shall be framed on all sides using lengths of studs installed between the vertical studs and attached to the studs at each end. The framed opening in the wall shall be a nom 6 in. (152 mm) wide and 12 in. (305 mm) higher than the width and height of the steel duct.
   B. Wallboard, Gypsum* — 5/8 in. (16 mm) thick, 4 ft (1.22 mm) wide with square or tapered edges. The gypsum wallboard type, thickness, number of layers, fastener type and sheet orientation shall be as specified in the individual U300, U400, V400 or W400 Series Design in the UL Fire Resistance Directory. Max area of opening is 395 sq. in. (0.25 m2)with max dimensions of 26-3/4 in. (679 mm) for steel studs. The hourly F and FH Ratings of the firestop system are equal to the hourly fire rating of the wall assembly in which it is installed. The hourly T, FT and FTH Ratings are 1/2 hr and 3/4 hr for 1 and 2 hr rated assemblies, respectively

Hilti Firestop Systems

Reproduced by HILTI, Inc. Courtesy of Underwriters Laboratories, Inc. January 27, 2015

Page: 1 of 2

System No. W-L-7059

WL 7059

2. Steel Duct — Nom 24 In. by 12 In. (610 by 305 mm) (or smaller) No. 24 gauge (or heavier) steel duct to be Installed eccentrically within the framed opening. The annular space shall be min 1 in. (25 mm) to max 1-3/4 in. (45 mm) Steel duct to be rigidly supported on both sides of wall assembly.
3. Batts and Blankets* — Max 1-1/2 in. (38 mm) thick glass fiber batt or blanket (min 3/4 pcf or 12 kg/m3) jacketed on the outside with a foil-scrim-kraft facing. Longitudinal and transverse joints sealed with aluminum foil tape. During the installation of the fill material, the batt or blanket shall be compressed 50% such that the annular space within the firestop system shall be min 1/4 in. (6 mm) to max 1 in. (25 mm). See Batts and Blankets - (BKNV) category In the Building Materials Directory for names of manufacturers. Any batt or blanket meeting the above specifications and bearing the UL Classification Marking with a Flame Spread Index of 25 or less and a Smoke Developed Index 50 or less may be used.
4. Fill, Void or Cavity Material* - Sealant — Min 5/8 in. or 1-1/4 in. (16 or 32 mm) thickness of fill material applied within annulus, flush with both surfaces of wall for 1 or 2 hr walls, respectively. If voids develop after the fill materials cures, the voids shall be sealed with additional fill material.
   HILTI CONSTRUCTION CHEMICALS, DIV OF HILTI INC — FS-ONE Sealant or FS-ONE MAX Intumescent Sealant

* Indicates such products shall bear the UL or cUL Certification Mark for jurisdictions employing the UL or cUL Certification (such as Canada), respectively.

Hilti Firestop Systems

Reproduced by HILTI, Inc. Courtesy of Underwriters Laboratories, Inc. January 27, 2015

Page: 2 of 2

System No. W-L-7151

WL 7151

Classified by Underwriters Laboratories, Inc. to UL 1479 and CAN/ULC-S115

ANSI/UL1479 (ASTM E814)	CAN/ULC S115
F Ratings - 1 and 2 Hr (See Item 1)	F Ratings - 1 and 2 Hr (See Item 1)
T Rating - 0, 1, and 2 Hr (See Item 4C)	FT Rating - 0, 1, and 2 Hr (See Item 4C)
	FH Ratings - 1 and 2 Hr (See Item 1)
	FTH Ratings - 0, 1, and 2 Hr (See Item 4C)

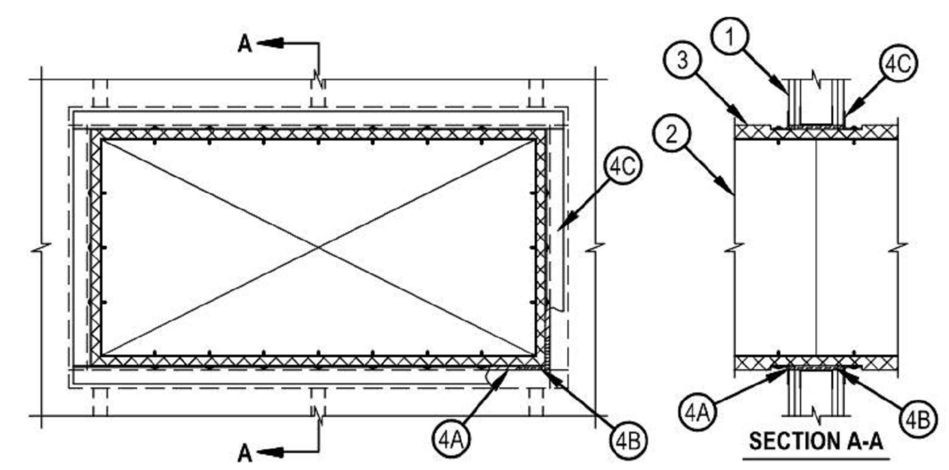

1. Wall Assembly — The fire-rated gypsum board/stud wall assembly shall be constructed of the materials and in the manner specified in the individual U300, U400, V400 or W400 Series Wall and Partition Designs in the Fire Resistance Directory and shall include the following construction features:
   A. Studs — Wall framing may consist of either wood studs or steel channel studs. Wood studs to consist of nom 2 by 4 in. (51 by 102 mm) lumber spaced 16 in. (406 mm) OC. Steel studs to be min 3-1/2 in. (89 mm) wide and spaced max 24 in. (610 mm). Additional framing members shall be used to completely frame around opening.
   B. Gypsum Board* — Nom 5/8 in. (16 mm) thick with square or tapered edges. The gypsum wallboard type, number of layers and sheet orientation shall be as specified in the individual Wall and Partition Design Number. Max area of opening is 210 sq in. (1355 cm2) with a max width of 14-1/2 in. (368 mm) for wood studs. Max area of opening is 2457 in2 (1.58 m2) with the max length or width dimension of 63 in. (1600 mm) for steel studs. The hourly F and FH Ratings of the firestop system are equal to the hourly fire rating of the wall assembly in which it is installed.
2. Steel Duct — Nom 36 in. by 60 in. (914 mm by 1524 mm or smaller) galv steel duct to be installed within the firestop system. The duct shall be constructed and reinforced in accordance with SMACNA construction standards. Duct to be rigidly supported on both sides of the wall assembly.
3. Batts and Blankets* — Max 2 in. (51 mm) thick min 3/4 pcf (12 kg/m3) glass fiber batt or blanket jacketed on the outside with a foil-scrim-kraft facing. Longitudinal and transverse joints sealed with aluminum foil tape. During the installation of the fill material, the batt or blanket shall be compressed minimum 50% such that the annular space within the firestop system shall be min 1/4 in. (6 mm) to a max 3-1/2 in. (89mm); refer to the table below.
   See Batts and Blankets - (BKNV) category in the Building Materials Directory for names of manufacturers. Any batt or blanket meeting the above specifications and bearing the UL Classification Marking with a Flame Spread Index of 25 or less and a Smoke Developed Index 50 or less may be used.

Hilti Firestop Systems

Reproduced by HILTI, Inc. Courtesy of Underwriters Laboratories, Inc. August 22, 2018

Page: 1 of 2

System No. W-L-7151

WL 7151

4. Firestop System — The firestop system shall consist of the following:
   A. Packing Material — Min 3-1/2 in. (89 mm) thickness of min 4.0 pcf (64 kg/m3) mineral wool batt insulation firmly packed into the opening as a permanent form. Packing material to be recessed from both sides of the wall to accommodate the required thickness of fill material.
   B. Fill, Void or Cavity Material*—Sealant — Min 5/8 in. (16 mm) thickness of fill material applied within annulus flush with both surfaces of the wall.
   HILTI CONSTRUCTION CHEMICALS, DIV OF HILTI INC — FS-ONE MAX Intumescent Sealant
   C. Steel Retaining Angle — No. 18 MSG (or heavier) galv steel angles. When duct dimension exceeds 48 in. (1219 mm), angles shall be No. 16 MSG (or heavier). Angles cut to fit contour of duct with a 2 in. (51 mm) overlap on the duct and a min 1 in. (25 mm) overlap on the gypsum board assembly on both surfaces of wall. 2 in. (51 mm) leg of angle secured to duct with min No. 8 by 3/4 in. (19 mm) long sheet metal screws, spaced a max of 6 in. (152 mm) OC. Angles are optional for ducts 30 in. (762 mm) by 24 in. (610 mm) and smaller. In addition, see table below for additional conditions and options regarding retaining angles.

Max Duct Dimension	Duct Thickness	Max Insulation Thickness (Item 3)	Annular Space	Packing Material (Item 4A) Required	Angle (Item 4C) Required	T-Rating Hr
**24 in. (610 mm)	24 ga or heavier	1-1/2 in. (38 mm)	1/4 in. min to 1 in. max (6 to 25 mm)	No	No	0
25 in. (635 mm) wide by 45 in. (1143 mm) high	24 ga or heavier	2 in. (51 mm)	1/4 in. min to 3-1/2 in. max (6 to 89 mm)	Yes	No	1 and 2 (Same as wall rating)

** Indicates that when max 1-1/2 in. (38 mm) thick insulation is used, steel angles are optional for those sides of the duct that do not exceed the dimension specified.

* Indicates such products shall bear the UL or cUL Certification Mark for jurisdictions employing the UL or cUL Certification (such as Canada), respectively.

Hilti Firestop Systems

Reproduced by HILTI, Inc. Courtesy of Underwriters Laboratories, Inc. August 22, 2018

Page: 2 of 2

Classified by Underwiters Laboratories, Inc. to ANSI/UL 1479 (ASTM E814) and CAN/ULC S115

System No. F-C-7060

ANSI/UL1479 (ASTM E814)	CAN/ULC S115
F Rating - 1 Hr	F Rating - 1 Hr
T Ratings - 1 Hr	FT Ratings - 1 Hr
L Rating At Ambient - Less Than 1 CFM/sq ft	FH Rating - 1 Hr
	FTH Ratings - 1 Hr
	L Rating At Ambient - Less Than 1 CFM/sq ft

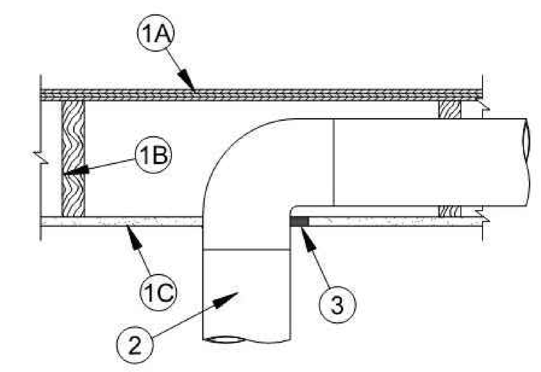

1. **Floor - Ceiling Assembly -** The 1 hr fire-rated wood joist floor-ceiling assembly shall be constructed of the materials and in the manner specified in the individual L500 Designs in the UL Fire Resistance Directory, as summarized below:
   A. **Flooring System -** Lumber or plywood subfloor with finish floor of lumber, plywood or **Floor Topping Mixture*** as specified in the individual Floor-Ceiling Design.
   B. **Wood Joists -** Nom 10 in. (254 mm) deep (or deeper) lumber, steel or combination lumber and steel joists, trusses or **Structural Wood Members*** with bridging as required and with ends firestopped.
   C. **Gypsum Board* -** Thickness, type, number of layers and fasteners as required in the individual Floor-Ceiling Design. Diam of opening is to be max 1-1/2 in. (38 mm) larger than diam of steel duct.

1A. **Chase Wall -** (Optional, Not Shown) - The through penetrant (Item 2) may be routed through a 1 hr fire rated single, double or staggered wood stud/gypsum board chase wall. Depth of chase wall stud cavity to be min 1/2 in. (13 mm) greater than diameter of opening cut in top plates to accommodate the through penetrant (Item 2). The chase wall shall be constructed of the materials and in the manner specified in the individual U300 Series Wall and Partition Designs in the UL Fire Resistance Directory and shall include the following construction features:
   A. **Studs -** Nom 2 by 4 in. (51 by 102 mm), 2 by 6 in. (51 by 152 mm) or double nom 2 by 4 in. (51 by 102 mm) lumber studs.
   B. **Sole Plate -** Nom 2 by 4 in. (51 by 102 mm), 2 by 6 in. (51 by 152 mm)or parallel 2 by 4 in. (51 by 102 mm) lumber plates, tightly butted.
   C. **Top Plate -** The double top plate shall consist of two nom 2 by 4 in (51 by 102 mm)., two nom 2 by 6 in. (51 by 152 mm) or two sets of parallel 2 by 4 in. (51 by 102 mm) lumber plates, tightly butted. Diam of opening is to be max 1-1/2 in. (38 mm) larger than diam of steel duct. As an alternate, the opening may be square-cut with a max dimension 1-1/2 in. (38 mm) greater than the diam of the pipe. Plates may be discontinuous over opening, terminating at two opposing edges of opening. Max length of discontinuity is 7-1/2 in. (191 mm).
   D. **Steel Plate -** When lumber plates are discontinuous, nom 1-1/2 in. (38 mm) wide No. 20 gauge (or heavier) galv steel plates shall be installed to connect discontinuous lumber plates and to provide a form for the fill material. Steel plates sized to lap 2 in. (51 mm) onto each discontinuous lumber plate and secured to lumber plates with steel screws or nails.
   E. **Gypsum Board* -** Thickness, type, number of layers and fasteners shall be as specified in the individual Wall and Partition Design.

Specified Technologies Inc. 210 Evans Way Somerville, NJ 08876

Reproduced courtesy of Underwriters Laboratories, Inc.
Created or Revised: January 07, 2015
(800)992-1180 • (908)526-8000 • FAX (908)231-8415 • E-Mail:techserv@stifirestop.com • Website:www.stifirestop.com

F-C-7060
PAGE 1 OF 2

2. **Steel Duct -** One nom 6 in. (152 mm) diam (or smaller) No. 30 GA (or heavier) galvanized steel duct to be installed either concentrically or eccentrically within the opening. Annular space to be min 0 in. (point contact) to max 1-1/2 in. (38 mm). Steel duct to be rigidly supported on both sides of floor-ceiling assembly.
3. **Fill, Void or Cavity Material* - Sealant -** Min 5/8 in. (16 mm) thickness of fill material applied within the annulus, flush with bottom surface of ceiling or top plate. Min 1/4 in. (6 mm) diam bead of fill material applied at point contact location at the penetrant/ceiling or chase wall top plate interface.

SPECIFIED TECHNOLOGIES INC - SpecSeal LCI Sealant, SpecSeal LC150 Sealant or Type WF300 Caulk

*** Indicates such products shall bear the UL or cUL Certification Mark for jurisdictions employing the UL or cUL Certification (such as Canada), respectively.**

Specified Technologies Inc. 210 Evans Way Somerville, NJ 08876

Reproduced courtesy of Underwriters Laboratories, Inc.
Created or Revised: January 07, 2015
(800)992-1180 • (908)526-8000 • FAX (908)231-8415 • E-Mail:techserv@stifirestop.com • Website:www.stifirestop.com

F-C-7060
PAGE 2 OF 2

U.S. DEPARTMENT OF HOUSING AND URBAN DEVELOPMENT

ISSUE HISTORY

No.	Date	Description
1	04/15/22	Permit Submission

REVISION HISTORY

No.	Date	Description

FUGLEBERG KOCH

2555 Temple Trail, Winter Park, FL 32789 (407) 629-0595
www. fuglebergkoch.com AA26002103

CONSULTANT

Joseph, Lawrence & Co Consulting Engineers
1180 HARWOOD AVE. SUITE 3000
ALTAMONTE SPRINGS, FLORIDA 32714
TEL: 321.972.4466
WWW.JLCENG.COM
CA NO. 4050 - E

JLC 22.0023.00

ALABAMA LICENSED No. 33858 PROFESSIONAL ENGINEER ADAM J. BARNEY

THE MADISON	Drawn:	MJR/SMB
	Checked:	BLS/AJB
	Approval:	BLS/AJB
	Date:	04/15/2022
HUNTSVILLE, AL	Project #:	5722

DETAILS
MECHANICAL

M6.06

© 2018 These documents and their contents are the property of FUGLEBERG KOCH - AA26002103, and are issued only for the specific project noted on these drawings. Any reproductions, revisions, or modifications of these documents without the expressed written consent of Fugleberg Koch is prohibited by law.

COM*check* Software Version COMcheckWeb
Envelope Compliance Certificate

Project Information

Energy Code: 2018 IECC
Project Title: The Madison - Building Type B
Location: Madison (Madison), Alabama
Climate Zone: 3a
Project Type: New Construction
Vertical Glazing / Wall Area: 22%

Construction Site: Owner/Agent: Designer/Contractor:

Additional Efficiency Package(s)
Credits: 1.0 Required 1.0 Proposed
Reduced Lighting Power, 1.0 credit

Building Area	Floor Area
1-Multifamily : Nonresidential	51552

Envelope Assemblies

Assembly	Gross Area or Perimeter	Cavity R-Value	Cont. R-Value	Proposed U-Factor	Budget U-Factor(a)
Roof: Attic Roof, Wood Joists, [Bldg. Use 1 - Multifamily]	14873	38.0	0.0	0.027	0.027
Floor: Unheated Slab-On-Grade, Vertical 2 ft., [Bldg. Use 1 - Multifamily] (c)	637	---	10.0	0.540	0.540
NORTH					
Ext. Wall: Wood-Framed, 24in. o.c., [Bldg. Use 1 - Multifamily]	9964	21.0	0.0	0.060	0.064
Door: Glass (over 50% glazing): Metal Frame, Entrance Door, Perf. Specs.: Product ID G07, SHGC 0.40, PF 0.50, [Bldg. Use 1 - Multifamily] (b)	48	---	---	0.450	0.770
Door: Uninsulated Single-Layer Metal, Garage door 14% glazing, [Bldg. Use 1 - Multifamily]	573	---	---	1.500	0.310
Window: Vinyl Frame: Operable, Perf. Specs.: Product ID L, SHGC 0.25, [Bldg. Use 1 - Multifamily] (b)	1849	---	---	0.300	0.600
Window: Vinyl Frame: Fixed, Perf. Specs.: Product ID I & O, SHGC 0.25, [Bldg. Use 1 - Multifamily] (b)	144	---	---	0.300	0.460
EAST					
Ext. Wall: Wood-Framed, 24in. o.c., [Bldg. Use 1 - Multifamily]	3834	21.0	0.0	0.060	0.064
Window: Vinyl Frame: Operable, Perf. Specs.: Product ID L & RR, SHGC 0.25, [Bldg. Use 1 - Multifamily] (b)	628	---	---	0.300	0.600
Window: Vinyl Frame: Fixed, Perf. Specs.: Product ID I & O, SHGC 0.25, [Bldg. Use 1 - Multifamily] (b)	68	---	---	0.300	0.460
SOUTH					
Ext. Wall: Wood-Framed, 24in. o.c., [Bldg. Use 1 - Multifamily]	9973	21.0	0.0	0.060	0.064
Door: Glass (over 50% glazing): Metal Frame, Entrance Door, Perf. Specs.: Product ID G07, SHGC 0.40, PF 0.50, [Bldg. Use 1 - Multifamily] (b)	336	---	---	0.450	0.770
Window: Vinyl Frame: Operable, Perf. Specs.: Product ID L, SHGC 0.25, [Bldg. Use 1 - Multifamily] (b)	2068	---	---	0.300	0.600
Window: Vinyl Frame: Fixed, Perf. Specs.: Product ID I & O,	108	---	---	0.300	0.460

Assembly	Gross Area or Perimeter	Cavity R-Value	Cont. R-Value	Proposed U-Factor	Budget U-Factor(a)
SHGC 0.25, [Bldg. Use 1 - Multifamily] (b)					
WEST					
Ext. Wall: Wood-Framed, 24in. o.c., [Bldg. Use 1 - Multifamily]	3855	21.0	0.0	0.060	0.064
Window: Vinyl Frame: Operable, Perf. Specs.: Product ID L & RR, SHGC 0.25, [Bldg. Use 1 - Multifamily] (b)	628	---	---	0.300	0.600
Window: Vinyl Frame: Fixed, Perf. Specs.: Product ID I & O, SHGC 0.25, [Bldg. Use 1 - Multifamily] (b)	68	---	---	0.300	0.460

(a) Budget U-factors are used for software baseline calculations ONLY, and are not code requirements.
(b) Fenestration product performance must be certified in accordance with NFRC and requires supporting documentation.
(c) Slab-On-Grade proposed and budget U-factors shown in table are F-factors.

Envelope PASSES: Design 19% better than code

Envelope Compliance Statement

Compliance Statement: The proposed envelope design represented in this document is consistent with the building plans, specifications, and other calculations submitted with this permit application. The proposed envelope systems have been designed to meet the 2018 IECC requirements in COM*check* Version COMcheckWeb and to comply with any applicable mandatory requirements listed in the Inspection Checklist.

Adam J. Barney, P.E. — Name - Title | Signature | 04/18/2022 — Date

COM*check* Software Version COMcheckWeb
Interior Lighting Compliance Certificate

Project Information

Energy Code: 2018 IECC
Project Title: The Madison - Building Type B
Project Type: New Construction

Construction Site: Owner/Agent: Designer/Contractor:

Additional Efficiency Package(s)
Credits: 1.0 Required 1.0 Proposed
Reduced Lighting Power, 1.0 credit

Allowed Interior Lighting Power

A Area Category	B Floor Area (ft2)	C Allowed Watts / ft2	D Allowed Watts
1-Multifamily	51552	0.61	31550
		Total Allowed Watts =	31550

Proposed Interior Lighting Power

A Fixture ID : Description / Lamp / Wattage Per Lamp / Ballast	B Lamps/ Fixture	C # of Fixture	D Fixture Watt.	E (C X D)
1-Multifamily				
LED: A: LED Other Fixture Unit 16W:	1	85	15	1275
LED: B1: LED Other Fixture Unit 25W:	1	30	21	630
LED: C: LED Other Fixture Unit 16W:	1	63	17	1071
LED: C1: LED Other Fixture Unit 16W:	1	114	17	1938
LED: D: LED Other Fixture Unit 28W:	1	63	30	1890
LED: F: LED Other Fixture Unit 28W:	1	136	55	7480
LED: T1: LED Other Fixture Unit 16W:	1	38	18	684
LED: G: LED Other Fixture Unit 25W:	1	64	21	1344
LED: H: LED Other Fixture Unit 25W:	1	8	21	168
LED: BA: LED Other Fixture Unit 13W: Exemption:Lighting approved for safety considerations	1	50	14	Exempt
LED: BB: LED Other Fixture Unit 13W: Exemption:Lighting approved for safety considerations	1	9	14	Exempt
LED: BC: LED Other Fixture Unit 50W: Exemption:Emergency lighting automatically off during normal business operation	1	30	53	Exempt
LED: BD: LED Other Fixture Unit 36W: Exemption:Lighting approved for safety considerations	1	4	37	Exempt
LED: BF: LED Other Fixture Unit 28W:	1	28	31	868
LED: EM: LED Other Fixture Unit 6.5W: Exemption:Lighting approved for safety considerations	1	24	3	Exempt
			Total Proposed Watts =	17348

Interior Lighting PASSES: Design 45% better than code

Interior Lighting Compliance Statement

Compliance Statement: The proposed interior lighting design represented in this document is consistent with the building plans, specifications, and other calculations submitted with this permit application. The proposed interior lighting systems have been designed to meet the 2018 IECC requirements in COM*check* Version COMcheckWeb and to comply with any applicable mandatory requirements listed in the Inspection Checklist.

Blake L. Suddeth, P.E. — Name - Title | Signature | 04/18/2022 — Date

COM*check* Software Version COMcheckWeb
Exterior Lighting Compliance Certificate

Project Information

Energy Code: 2018 IECC
Project Title: The Madison - Building Type B
Project Type: New Construction
Exterior Lighting Zone 2 (Residentially zoned area (LZ2))

Construction Site: Owner/Agent: Designer/Contractor:

Allowed Exterior Lighting Power

A Area/Surface Category	B Quantity	C Allowed Watts /	D Tradable Wattage	E Allowed Watts (B X C)
Pedestrian and vehicular entrances and exits	12 ft of	14	Yes	168
Illuminated area of facade wall or surface	500 ft2	0.07	No	38
		Total Tradable Watts (a) =		168
		Total Allowed Watts =		206
		Total Allowed Supplemental Watts (b) =		400

(a) Wattage tradeoffs are only allowed between tradable areas/surfaces.
(b) A supplemental allowance equal to 400 watts may be applied toward compliance of both non-tradable and tradable areas/surfaces.

Proposed Exterior Lighting Power

A Fixture ID : Description / Lamp / Wattage Per Lamp / Ballast	B Lamps/ Fixture	C # of Fixture	D Fixture Watt.	E (C X D)
Pedestrian and vehicular entrances and exits (12 ft of door width): Tradable Wattage				
LED: BW: LED Other Fixture Unit 36W:	1	4	36	144
Illuminated area of facade wall or surface (500 ft2): Non-tradable Wattage				
LED: BW: LED Other Fixture Unit 36W:	1	4	36	144
			Total Tradable Proposed Watts =	144

Exterior Lighting PASSES: Design 69% better than code

Exterior Lighting Compliance Statement

Compliance Statement: The proposed exterior lighting design represented in this document is consistent with the building plans, specifications, and other calculations submitted with this permit application. The proposed exterior lighting systems have been designed to meet the 2018 IECC requirements in COM*check* Version COMcheckWeb and to comply with any applicable mandatory requirements listed in the Inspection Checklist.

Blake L. Suddeth, P.E. — Name - Title | Signature | 04/18/2022 — Date

COM*check* Software Version COMcheckWeb
Mechanical Compliance Certificate

Project Information

Energy Code: 2018 IECC
Project Title: The Madison - Building Type B
Location: Madison (Madison), Alabama
Climate Zone: 3a
Project Type: New Construction

Construction Site: Owner/Agent: Designer/Contractor:

Additional Efficiency Package(s)
Credits: 1.0 Required 1.0 Proposed
Reduced Lighting Power, 1.0 credit

Mechanical Systems List

Quantity	System Type & Description
19	AHU-1 (Single Zone): Cooling: 19 each - Split System, Capacity = 18 kBtu/h, Air-Cooled Condenser, Air Economizer; Proposed Efficiency = 14.00 SEER, Required Efficiency: 13.00 SEER; Fan System: FAN SYSTEM 1 -- Compliance (Motor nameplate HP and fan efficiency method) : Passes; Fans: 1.5-TON Supply, Constant Volume, 600 CFM, 0.3 motor nameplate hp, 98.0 fan efficiency grade, 98.0 total fan efficiency, 98.0 design fan efficiency , fan exception: Fan array <= 5 total HP
14	AHU-2 (Single Zone): Cooling: 14 each - Split System, Capacity = 24 kBtu/h, Air-Cooled Condenser, Air Economizer; Proposed Efficiency = 14.00 SEER, Required Efficiency: 13.00 SEER; Fan System: FAN SYSTEM 2 -- Compliance (Motor nameplate HP and fan efficiency method) : Passes; Fans: 2-TON Supply, Constant Volume, 800 CFM, 0.3 motor nameplate hp, 98.0 fan efficiency grade, 98.0 total fan efficiency, 98.0 design fan efficiency , fan exception: Fan array <= 5 total HP
8	AHU-4 (Single Zone): Cooling: 1 each - Split System, Capacity = 36 kBtu/h, Air-Cooled Condenser, Unknown Economizer; Proposed Efficiency = 14.00 SEER, Required Efficiency: 13.00 SEER; Fan System: FAN SYSTEM 4 -- Compliance (Motor nameplate HP and fan efficiency method) : Passes; Fans: FAN 4 Supply, Constant Volume, 1200 CFM, 0.5 motor nameplate hp, 98.0 fan efficiency grade, 98.0 total fan efficiency, 98.0 design fan efficiency , fan exception: Fan array <= 5 total HP
3	Water Heater: Electric Storage Water Heater, Capacity: 38 gallons; Proposed Efficiency: 1.00 SL, %/h (if > 12 kW), Required Efficiency: 1.01 SL, %/h (if > 12 kW)
30	Water Heater: Electric Storage Water Heater, Capacity: 40 gallons; Proposed Efficiency: 0.98 SL, %/h (if > 12 kW), Required Efficiency: 0.98 SL, %/h (if > 12 kW)
8	Water Heater: Electric Storage Water Heater, Capacity: 50 gallons w/ Circulation Pump; Proposed Efficiency: 0.84 SL, %/h (if > 12 kW), Required Efficiency: 0.84 SL, %/h (if > 12 kW)

Mechanical Compliance Statement

Compliance Statement: The proposed mechanical design represented in this document is consistent with the building plans, specifications, and other calculations submitted with this permit application. The proposed mechanical systems have been designed to meet the 2018 IECC requirements in COM*check* Version COMcheckWeb and to comply with any applicable mandatory requirements listed in the Inspection Checklist.

Adam J. Barney, P.E. — Name - Title | Signature | 04/18/2022 — Date

ISSUE HISTORY

No.	Date	Description
1	04/15/22	Permit Submission

REVISION HISTORY

No.	Date	Description

FUGLEBERG KOCH
2555 Temple Trail, Winter Park, FL 32789 (407) 629-0595
www. fuglebergkoch.com AA26002103

CONSULTANT
Joseph, Lawrence & Co Consulting Engineers
1180 HARWOOD AVE. SUITE 3000
ALTAMONTE SPRINGS, FLORIDA 32714
TEL: 321.972.4466
WWW.JLCENG.COM
CA NO. 4050 - E

JLC 22.0023.00

THE MADISON
HUNTSVILLE, AL

Drawn:	MJR/SMB
Checked:	BLS/AJB
Approval:	BLS/AJB
Date:	04/15/2022
Project #:	5722

ENERGY CALCULATIONS MECHANICAL

M7.02

© 2018 These documents and their contents are the property of FUGLEBERG KOCH - AA26002103, and are issued only for the specific project noted on these drawings. Any reproductions, revisions, or modifications of these documents without the expressed written consent of Fugleberg Koch is prohibited by law.

ELECTRICAL SYMBOL LEGEND

WIRING AND POWER

NOTE:
SYMBOLS SHOWN ARE FOR REFERENCE PURPOSES ONLY. ALL OF THESE SYMBOLS MAY NOT BE USED FOR THIS PROJECT.

- WALL OUTLET BOX AND SINGLE RECEPTACLE
- WALL OUTLET BOX AND DUPLEX RECEPTACLE
- TWO GANG WALL OUTLET BOX AND (2) DUPLEX RECEPTACLES
- WALL OUTLET BOX AND DUPLEX RECEPTACLE MOUNTED ABOVE COUNTER
- WALL OUTLET BOX AND DUPLEX RECEPTACLE WITH TOP HALF SWITCHED
- WALL OUTLET BOX AND DUPLEX RECEPTACLE CONNECTED TO EMERGENCY SYSTEM
- CEILING OUTLET BOX AND SINGLE RECEPTACLE
- CEILING OUTLET BOX AND DUPLEX RECEPTACLE
- WALL OUTLET BOX AND GFCI DUPLEX RECEPTACLE
- WALL OUTLET BOX AND GFCI DUPLEX RECEPTACLE MOUNTED ABOVE COUNTER
- S — WALL OUTLET BOX AND DUPLEX SAFETY RECEPTACLE
- T — WALL OUTLET BOX AND DUPLEX TWIST-LOCK RECEPTACLE
- WP — WALL OUTLET BOX AND GFCI DUPLEX RECEPTACLE WITH WEATHERPROOF COVER
- WALL OUTLET BOX AND SPECIAL PURPOSE OUTLET AS NOTED ON PLANS
- FLUSH FLOOR OUTLET BOX WITH DUPLEX RECEPTACLE
- FLUSH FLOOR OUTLET BOX WITH (2) DUPLEX RECEPTACLES
- FLUSH FLOOR OUTLET BOX WITH DUPLEX RECEPTACLE AND TELECOMMUNICATIONS OUTLET
- FLUSH WALL JUNCTION BOX AND BLANK PLATE
- JUNCTION BOX AND BLANK PLATE ABOVE CEILING
- SURFACE MOUNTED JUNCTION BOX AND BLANK PLATE
- WP — SURFACE MOUNTED WEATHERPROOF JUNCTION BOX AND COVER
- PB — FLUSH GRADE FIBER COMPOSITE PULL BOX AS NOTED
- M — MOTOR CONNECTION AS NOTED
- FLUSH SHUNT-TRIP BUTTON, MOUNTED 80" TO TOP
- C — CONTROL AND/OR POWER EQUIPMENT CONNECTION
- TIME CLOCK
- PC — PHOTO CELL
- DISCONNECT SWITCH, SIZE AS NOTED
- 120/208V BRANCH CIRCUIT PANELBOARD, SURFACE MOUNTED
- 120/208V BRANCH CIRCUIT PANELBOARD, FLUSH MOUNTED
- 277/480V BRANCH CIRCUIT PANELBOARD
- T — TRANSFORMER
- AUTOMATIC TRANSFER SWITCH
- A-3 — BRANCH CIRCUIT HOMERUN WITH PANEL NAME AND CIRCUIT NUMBER, QUANTITY OF ARROWHEADS DENOTES QUANTITY OF BRANCH CIRCUITS
- BRANCH CIRCUIT WIRING, PROVIDE QUANTITY OF CONDUCTORS REQUIRED FOR CIRCUITING AND SWITCHING INDICATED ON PLANS
- POWER LEG ONLY (NO SWITCH LEG BETWEEN ROOMS)
- CONDUIT CAPPED OFF
- CONDUIT CONTINUED
- CONDUIT RUN UP
- CONDUIT RUN DOWN
- GROUND OR GROUND ROD AS NOTED

LIGHTING AND SWITCHING

- CEILING MOUNTED LIGHT FIXTURE, REFER TO LIGHT FIXTURE SCHEDULE
- CEILING MOUNTED RECESSED DOWNLIGHT FIXTURE, REFER TO LIGHT FIXTURE SCHEDULE
- CEILING MOUNTED RECESSED WALLWASH FIXTURE, REFER TO LIGHT FIXTURE SCHEDULE
- CEILING MOUNTED "CLOSE TO CEILING" FIXTURE, REFER TO LIGHT FIXTURE SCHEDULE
- PENDANT MOUNTED LIGHT FIXTURE, REFER TO LIGHT FIXTURE SCHEDULE
- TRACK LIGHT FIXTURE WITH HEADS AS REQUIRED, REFER TO LIGHT FIXTURE SCHEDULE
- WALL MOUNTED LIGHT FIXTURE, REFER TO LIGHT FIXTURE SCHEDULE
- CEILING MOUNTED LIGHT FIXTURE WITH EMERGENCY BACKUP
- CEILING MOUNTED RECESSED DOWNLIGHT FIXTURE WITH EMERGENCY BACKUP
- WALL MOUNTED LIGHT FIXTURE WITH EMERGENCY BACKUP
- WALL MOUNTED EMERGENCY BATTERY LIGHT FIXTURE, REFER TO LIGHT FIXTURE SCHEDULE
- CEILING MOUNTED EMERGENCY BATTERY LIGHT FIXTURE, REFER TO LIGHT FIXTURE SCHEDULE
- CEILING MOUNTED EXIT SIGN WITH EMERGENCY BACKUP, REFER TO LIGHT FIXTURE SCHEDULE
- WALL MOUNTED EXIT SIGN WITH EMERGENCY BACKUP, REFER TO LIGHT FIXTURE SCHEDULE
- COMBINATION EXIT SIGN AND EMERGENCY LIGHT FIXTURE WITH BATTERY BACKUP
- Sa — WALL OUTLET BOX AND SINGLE POLE SWITCH ('a' INDICATES SWITCH LEG)
- S3 — WALL OUTLET BOX AND THREE-WAY SWITCH
- SF — WALL OUTLET BOX AND FAN CONTROL SWITCH
- SD — WALL OUTLET BOX AND DIMMER SWITCH AS REQUIRED FOR LOAD SERVED
- SD3 — WALL OUTLET BOX AND THREE-WAY DIMMER SWITCH
- SM — WALL OUTLET BOX WITH SINGLE POLE MANUAL MOTOR STARTER SWITCH
- SO — WALL OUTLET BOX AND DUAL TECHNOLOGY OCCUPANCY SENSOR
- ST — WALL OUTLET BOX AND DIGITAL TIMECLOCK SWITCH FOR AUTOMATIC CONTROL
- OS — CEILING OUTLET BOX AND DUAL TECHNOLOGY OCCUPANCY SENSOR
- DL — CEILING OUTLET BOX AND DAYLIGHT HARVESTING SENSOR

FIRE ALARM SYSTEM LEGEND

- F — MANUAL PULL STATION
- cd — WALL MOUNTED HORN WITH STROBE (cd=CANDELA RATING)
- WP — WALL MOUNTED HORN WITH STROBE IN WEATHERPROOF ENCLOSURE
- CEILING MOUNTED HORN WITH STROBE
- M — WALL MOUNTED MINI HORN
- M — WALL MOUNTED MINI HORN WITH STROBE
- WALL MOUNTED VOICE EVACUATION SPEAKER WITH STROBE
- CEILING MOUNTED VOICE EVACUATION SPEAKER WITH STROBE
- WALL MOUNTED STROBE
- SMOKE DETECTOR
- CO — SMOKE AND CARBON MONOXIDE COMBINATION DETECTOR
- DUCT MOUNTED SMOKE DETECTOR
- HEAT DETECTOR
- REMOTE DUCT DETECTOR INDICATOR LIGHT AND TEST SWITCH (NUMBER INDICATES QUANTITY)
- R — FAN SHUT-DOWN RELAY
- D — ELECTROMAGNETIC DOOR RELEASE DEVICE
- SMOKE DAMPER (PROVIDE BY MECHANICAL, CONNECTED BY ELECTRICAL)
- P — FIREMAN'S PHONE JACK
- TS — SPRINKLER SYSTEM SUPERVISORY SWITCH CONNECTION
- FS — SPRINKLER SYSTEM FLOW SWITCH CONNECTION
- CM — CONTROL MODULE
- MM — MONITOR MODULE
- LB — LOCK BOX
- FACP — FIRE ALARM CONTROL PANEL
- FATC — FIRE ALARM TERMINAL CABINET
- FAAP — FIRE ALARM ANNUNCIATOR PANEL
- DACT — DIGITAL ALARM COMMUNICATOR TRANSMITTER

TELECOMMUNICATION SYSTEM LEGEND

- COMBINATION TELECOMMUNICATIONS/DATA WALL OUTLET BOX AND BLANK PLATE WITH MIN. 3/4"C. TO ACCESSIBLE CEILING SPACE. COORDINATE OUTLET REQUIREMENTS WITH OWNER.
- W — TELECOMMUNICATIONS WALL OUTLET BOX AND BLANK PLATE FOR WALL MOUNTED TELEPHONE WITH MIN. 3/4"C. TO ACCESSIBLE CEILING SPACE. COORDINATE OUTLET REQUIREMENTS WITH OWNER.
- DATA WALL OUTLET BOX AND BLANK PLATE WITH MIN. 3/4"C. TO ACCESSIBLE CEILING SPACE. COORDINATE OUTLET REQUIREMENTS WITH OWNER.
- FLUSH FLOOR OUTLET BOX WITH POWER DEVICE AND TELECOMMUNICATIONS OUTLET WITH MIN. 3/4"C. TO ACCESSIBLE CEILING SPACE.
- WAP — CEILING OUTLET BOX AND BLANK PLATE WITH MIN. 3/4"C. TO TTB FOR WIRELESS ACCESS POINT. COORDINATE OUTLET REQUIREMENTS WITH OWNER.
- TV — COMBINATION TELECOMMUNICATIONS/TELEVISION WALL OUTLET BOX AND BLANK PLATE. COORDINATE OUTLET AND CABLING REQUIREMENTS WITH OWNER.
- 3/4" PLYWOOD TELEPHONE TERMINAL BOARD, SIZE AS SHOWN ON PLANS.
- TTC — TELEPHONE TERMINAL CABINET, SIZE AS NOTED ON PLAN.

GENERAL NOTES

1. ALL WORK SHALL BE DONE IN ACCORDANCE WITH THE LATEST ADOPTED EDITION OF THE NATIONAL ELECTRICAL CODE (NFPA 70), AND THE LATEST ADOPTED EDITION OF THE INTERNATIONAL BUILDING CODE.
2. CONTRACTOR SHALL FIELD VERIFY ALL CONDITIONS AND COORDINATE WITH ALL EQUIPMENT MANUFACTURER/INSTALLERS PRIOR TO BIDDING.
3. ALL ELECTRICAL MATERIALS, DEVICES, APPLIANCES, AND EQUIPMENT SHALL BE LABEL LISTED BY AN APPROVED THIRD-PARTY TESTING AGENCY.

BUILDING:

4. INSTALLATION HEIGHT OF EQUIPMENT (TO CENTERLINE) ABOVE FINISHED FLOOR UNLESS NOTED OTHERWISE SHALL BE:

   RECEPTACLE = 18"
   CLOCK = 7'-6"
   SWITCH = 44"
   MODULAR JACK FOR WALL MOUNTED TELEPHONE = 48"
   MODULAR TELEPHONE JACK = 18"
   TELEVISION OUTLET = 84"
   COMPUTER OUTLET = 18"
   CALL SWITCH = 44"
   REMOTE TEST STATION FOR DUCT DETECTOR = 52"
   C = ABOVE COUNTER BACKSPLASH, COORDINATE WITH ARCHITECTURAL ELEVATIONS AND MILLWORK.

5. ALL CONDUIT AND WIRING SHALL BE CONCEALED IN WALLS OR ABOVE CEILINGS UNLESS NOTED OTHERWISE OR APPROVED BY THE ARCHITECT/ENGINEER. ALL DEVICE OUTLET BOXES SHALL BE RECESSED UNLESS NOTED OTHERWISE OR APPROVED BY THE ARCHITECT/ENGINEER. WHERE APPROVED OR NOTED SURFACE METAL RACEWAY AND DEVICE BOXES SHALL BE USED IN LIEU OF CONDUIT AND CONCEALED BOXES AT NO EXTRA COST TO THE OWNER.
6. ALL CONDUIT ROUTING SHOWN IS APPROXIMATE ONLY. CONTRACTOR SHALL FIELD VERIFY FINAL ROUTE WITH ALL OTHER TRADES AND CONDITIONS IN FIELD PRIOR TO ROUGH-IN.
7. CONDUIT RUNS SHOWN ARE SCHEMATIC AND DO NOT INDICATE THE NECESSARY FITTINGS AND JUNCTION BOXES THAT ARE INCLUDED IN THE SCOPE OF THE WORK.
8. CONTRACTOR SHALL PERMANENTLY IDENTIFY ALL WIRING WITH THE SOURCE AND CIRCUIT AT ALL ELECTRICAL EQUIPMENT, PULL AND JUNCTION BOXES AND ELECTRICAL TERMINATIONS PROVIDED OR ASSOCIATED WITH THIS CONSTRUCTION.
9. COORDINATE EXACT LOCATION OF LIGHTING FIXTURES IN MECH. ROOMS/SPACES WITH DUCTWORK INSTALLER PRIOR TO ROUGH-IN. LOCATE BELOW DUCTWORK(8'-0" AFF MINIMUM) CENTERED IN ROOM AS MUCH AS POSSIBLE.
10. COORDINATE EXACT INSTALLATION REQUIREMENTS OF OUTLETS IN MILLWORK WITH ARCHITECTURAL DRAWINGS, APPROVED SHOP DRAWINGS AND MILLWORK INSTALLER PRIOR TO ROUGH-IN.
11. VERIFY EXACT LOCATION OF ALL MECHANICAL EQUIPMENT WITH MECHANICAL INSTALLER PRIOR TO ROUGH-IN.
12. REFER TO ARCHITECTURAL REFLECTED CEILING PLANS FOR EXACT LOCATIONS OF ALL LIGHT FIXTURES.
13. PROVIDE NYLON PULLSTRINGS IN ALL EMPTY CONDUITS.
14. COORDINATE THE EXACT LOCATION OF ALL ELECTRICAL EQUIPMENT LOCATED IN ELEVATOR MACHINE ROOMS, SHAFTS AND PITS. LOCATE EQUIPMENT AS REQUIRED TO MEET APPLICABLE CODES.PROVIDE AUTOMATIC DISCONNECTION OF THE ELEVATOR MAIN POWER SUPPLY (PER ANSI A17.1, RULE 102.2 1987 ED.) PRIOR TO ACTIVATION OF AUTOMATIC SPRINKLER LOCATED WITHIN THE ELEVATOR MACHINE ROOM, PIT OR SHAFT. COORDINATE WITH FIRE PROTECTION AND FIRE ALARM INSTALLER.
15. COORDINATE THE REQUIRED SIZE OF ALL CIRCUIT BREAKERS FEEDING EQUIPMENT, (I.E. MOTORS, HVAC, KITCHEN EQUIPMENT, SPECIAL PURPOSE OUTLETS, ELEVATORS, OWNER FURNISHED EQUIPMENT ETC.) WITH APPROVED EQUIPMENT SHOP DRAWINGS AND OWNER REPRESENTATIVES PRIOR TO ORDERING PANELBOARDS. BREAKERS SHALL BE SIZED PER THE NEC, THE EQUIPMENT NAME PLATE AND MANUFACTURERS RECOMMENDATIONS.
16. ALL DIMMED CIRCUITS SHALL BE PROVIDED WITH DEDICATED NEUTRALS FOR EACH DIMMER AND PHASE CONDUCTOR THROUGHOUT THE ENTIRE CIRCUIT.
17. THE POWER COMPANY SHALL BE CONTACTED WITHIN 10 DAYS OF THE AWARD OF THE CONTRACT BY THE CONTRACTOR TO VERIFY THE ACTUAL AVAILABLE SHORT CIRCUIT FAULT CURRENT (AIC) AT THE TRANSFORMER SECONDARY BUSHINGS. THE CONTRACTOR SHALL PROVIDE ELECTRICAL DISTRIBUTION AND UTILIZATION EQUIPMENT AND PANELBOARDS WHICH HAVE AIC/WITHSTAND RATINGS GREATER THAN THE AVAILABLE AIC AT EACH POINT IN THE ELECTRICAL SYSTEM.
18. VISIT THE EXISTING FACILITY AND CAREFULLY EXAMINE THOSE PORTIONS OF THE BUILDING AND SITE AFFECTED BY THIS WORK BEFORE SUBMITTING PROPOSALS, SO AS TO BECOME FAMILIAR WITH THE EXISTING CONDITIONS AND DIFFICULTIES THAT WILL AFFECT EXECUTION OF THE WORK. SUBMISSION OF A PROPOSAL WILL BE CONSTRUED AS EVIDENCE THAT SUCH EXAMINATION HAS BEEN MADE AND LATER CLAIMS FOR LABOR, EQUIPMENT OR MATERIALS REQUIRED BECAUSE OF DIFFICULTIES ENCOUNTERED WILL NOT BE RECOGNIZED.
19. CONTRACTOR SHALL INCLUDE IN HIS BID THE TRANSPORT AND DISPOSAL OR RECYCLING OF ALL WASTE MATERIALS GENERATED BY THIS PROJECT IN ACCORDANCE WITH ALL RULES, REGULATIONS AND GUIDELINES APPLICABLE.
20. PANEL SCHEDULES INDICATE CIRCUIT DESIGNATIONS ONLY. CONTRACTOR TO PROVIDE MATERIALS AS REQUIRED WHEN NEUTRALS ARE SHARED TO COMPLY WITH NEC REQUIREMENTS. ALL SINGLE PHASE MULTIWIRE BRANCH CIRCUITS SHALL BE FED VIA A TWO POLE BREAKER OR TWO SINGLE POLE BREAKERS WITH AN IDENTIFIED HANDLE TIE. ALL THREE PHASE MULTIWIRE BRANCH CIRCUITS SHALL BE FED VIA A THREE POLE BREAKER OR THREE SINGLE POLE BREAKERS WITH AN IDENTIFIED HANDLE TIE (PER NEC 210.4B).
21. PER NEC 110.22; PROVIDE PERMANENT LABELING FOR ALL SERIES RATED PANEL ENCLOSURES TO READ AS FOLLOWS: CAUTION – SERIES COMBINATION SYSTEM RATED _______ AMPERES. IDENTIFIED REPLACEMENT COMPONENTS REQUIRED.
27. ELECTRICAL CONTRACTOR SHALL PROVIDE FULL LIGHTNING PROTECTION SYSTEM FOR THIS PROJECT PER NFPA 780.

GROUNDING:

28. ALL METAL RACEWAYS, INCLUDING CONDUIT, WIRE TROUGHS, WIREMOLD, ETC., SHALL BE GROUNDED. ALL CONNECTIONS IN METAL RACEWAYS SHALL BE COMPLETED IN SUCH A MANNER AS TO MAINTAIN A CONTINUOUS PATH TO GROUND THROUGHOUT THE ENTIRE LENGTH OF THE RACEWAY.

WIRING:

29. UNLESS NOTED OTHERWISE ON THE DRAWINGS OR ON THE EQUIPMENT WIRING SCHEDULE, EACH BRANCH CIRCUIT HOME RUN SHALL BE THREE (3) #12 AWG THHN/THWN (1 HOT, 1 NEUTRAL & 1 EQUIPMENT GROUND) IN 3/4" EMT CONDUIT. PROTECT EACH CIRCUIT WITH A 20 AMPERE, 1-POLE OVERCURRENT DEVICE UNLESS NOTED OTHERWISE. COMBINED NEUTRALS ARE NOT PERMITTED.

U.S. DEPARTMENT OF HOUSING AND URBAN DEVELOPMENT

ISSUE HISTORY

No.	Date	Description
1	04/15/22	Permit Submission

REVISION HISTORY

No.	Date	Description

FUGLEBERG KOCH
2555 Temple Trail, Winter Park, FL 32789 (407) 629-0595
www. fuglebergkoch.com AA26002103

CONSULTANT
Joseph, Lawrence & Co
Consulting Engineers
1180 HARWOOD AVE. SUITE 3000
ALTAMONTE SPRINGS, FLORIDA 32714
TEL: 321.972.4466
WWW.JLCENG.COM
CA NO. 4050 - E

JLC 22.0023.00

ALABAMA LICENSED No. 31127 PROFESSIONAL ENGINEER BLAKE L. SUDDETH

Drawn:	MJR/SMB
Checked:	BLS/AJB
Approval:	BLS/AJB
Date:	04/15/2022
Project #:	5722

THE MADISON
HUNTSVILLE, AL

SYMBOL LEGEND & GENERAL NOTES ELECTRICAL

E0.01

© 2018 These documents and their contents are the property of FUGLEBERG KOCH - AA26002103, and are issued only for the specific project noted on these drawings. Any reproductions, revisions, or modifications of these documents without the expressed written consent of Fugleberg Koch is prohibited by law.

GENERAL NOTES:

A. DO NOT SCALE ELECTRICAL DRAWING FOR ANY DIMENSIONS.

B. ALL WORK SHALL COMPLY WITH THE 2017 NATIONAL ELECTRICAL CODE, NATIONAL, STATE AND LOCAL CODES. PROVIDE GROUNDING AND BONDING PER NEC 250.

C. SEE SINGLE LINE DIAGRAM FOR FEEDER WIRE AND CONDUIT SIZE. ALL CIRCUITS NOT SIZED ON DRAWING SHALL BE INSTALLED TO MEET MINIMUM SIZE REQUIRED BY NEC. ALL CONDUCTORS SHALL HAVE AN EQUIPMENT GROUND WIRE SIZED PER NEC.

D. FIELD VERIFY EXACT LOCATION OF ALL DEVICES AND EQUIPMENT PRIOR TO ROUGH IN.

E. REFER TO ENLARGED TYPICAL UNIT PLANS FOR ALL ELECTRICAL IN UNITS.

REFERENCE NOTES: ⓧ

1. PROVIDE TWO-WAY COMMUNICATION SYSTEM AND CABLING TO MAIN BASE STATION AS REQUIRED BY 2018 FFPC, AND 2018 NFPA 101 LIFE SAFETY CODE. COORDINATE LOCATION WITH OWNER AND AUTHORITY HAVING JURISDICTION PRIOR TO ROUGH-IN.
2. ELECTRICAL CONTRACTOR SHALL COORDINATE DISCONNECT AND FUSE REQUIREMENTS FOR MECHANICAL UNIT WITH MECHANICAL CONTRACTOR AND EQUIPMENT MANUFACTURER PRIOR TO ROUGH-IN AND PROVIDE AS REQUIRED. COORDINATE LOCATION OF DISCONNECT WITH OWNER AND MECHANICAL CONTRACTOR PRIOR TO ROUGH-IN. LOCATE AS REQUIRED TO MAINTAIN NEC CLEARANCES.
3. COORDINATE EXACT LOCATION WITH THE ELECTRIC UTILITY AND ARCHITECTURAL PLANS. VERIFY 3'-0" CLEARANCE EXISTS IN FRONT OF METER CENTER AND HOUSE PANEL. A MAXIMUM OF 6'-6" SHALL BE MAINTAINED FROM GRADE TO THE CENTER OF THE HIGHEST METER.
4. PROVIDE 2" UNDERGROUND CONDUIT FROM FACP BACK TO MASTER FACP LOCATED IN CLUBHOUSE. REFER TO FIRE ALARM RISER DIAGRAM FOR ADDITIONAL INFORMATION.
5. CONNECT INTERIOR MECHANICAL MINI-SPLIT UNIT MAU-1 THROUGH EXTERIOR UNIT MCU-1. CONNECT PER MANUFACTURER'S RECOMMENDATIONS, AND PROVIDE ALL CONTROL WIRING, CONDUIT, ETC. AS REQUIRED.
6. COORDINATE EXACT LOCATION OF BUILDING SHUNT TRIP WITH FIRE MARSHALL PRIOR TO ROUGH-IN. SHUNT TRIP TO SHUT OFF ELECTRICAL SERVICE TO MCⓑ.
7. COORDINATE EXACT LOCATION OF TAMPER AND FLOW SWITCHES WITH FIRE PROTECTION DRAWINGS PRIOR TO ROUGH-IN.
8. PROVIDE PUSHBUTTON CONTROL AND LOW VOLTAGE WIRING FOR GARAGE DOOR OPENER AS REQUIRED BY OWNER/MANUFACTURER.
9. PROVIDE 120V CEILING MOUNTED OUTLET FOR GARAGE DOOR OPENER. COORDINATE LOCATION WITH DOOR INSTALLER PRIOR TO ROUGH-IN. PROVIDE LOW VOLTAGE WIRING AND PUSH BUTTON LOCATED NEAR DOOR AS REQUIRED.
10. GARAGE EXHAUST FAN TO BE CONTROLLED BY CARBON MONOXIDE DETECTOR PROVIDED BY MECHANICAL CONTRACTOR. CONNECT FAN TO LIGHTING CIRCUIT SERVING GARAGE. REFER TO LIGHTING PLAN FOR ADDITIONAL INFORMATION.
11. PROVIDE 120V CONNECTION TO CARBON MONOXIDE SENSOR PROVIDED BY MECHANICAL CONTRACTOR. COORDINATE CONTROL WIRING WITH MECHANICAL CONTRACTOR AND PROVIDE AS REQUIRED. CONNECT TO LOCAL GARAGE CIRCUIT.
12. PROVIDE EXTERIOR GARAGE DOOR KEYPAD. COORDINATE LOCATION AND REQUIREMENTS WITH GARAGE DOOR INSTALLER. PROVIDE LOW VOLTAGE WIRING AS REQUIRED.
13. ELECTRICAL CONTACTOR SHALL PROVIDE (1) 8"x8" JUNCTION BOX WITH COVERPLATE ON EACH FLOOR OF BUILDING FOR FUTURE DAS SYSTEM IF REQUIRED. PROVIDE 2"C. (EMPTY W/ PULLSTRING) BETWEEN ALL JUNCTION BOXES FOR FUTURE DAS SYSTEM WIRING. COORDINATE LOCATION OF JUNCTION BOXES WITH OWNER AND FIRE ALARM CONTRACTOR PRIOR TO ROUGH-IN. LABEL ALL JUNCTION BOXES, COVERPLATE AND CONDUIT AS REQUIRED FOR FUTURE IDENTIFICATION.
14. PROVIDE 120V CIRCUIT FOR CONNECTION OF FIRE/SMOKE DAMPER. CONNECT TO CIRCUIT HA-39. COORDINATE LOCATION AND CONNECTION REQUIREMENTS WITH MECHANICAL CONTRACTOR PRIOR TO ROUGH-IN.

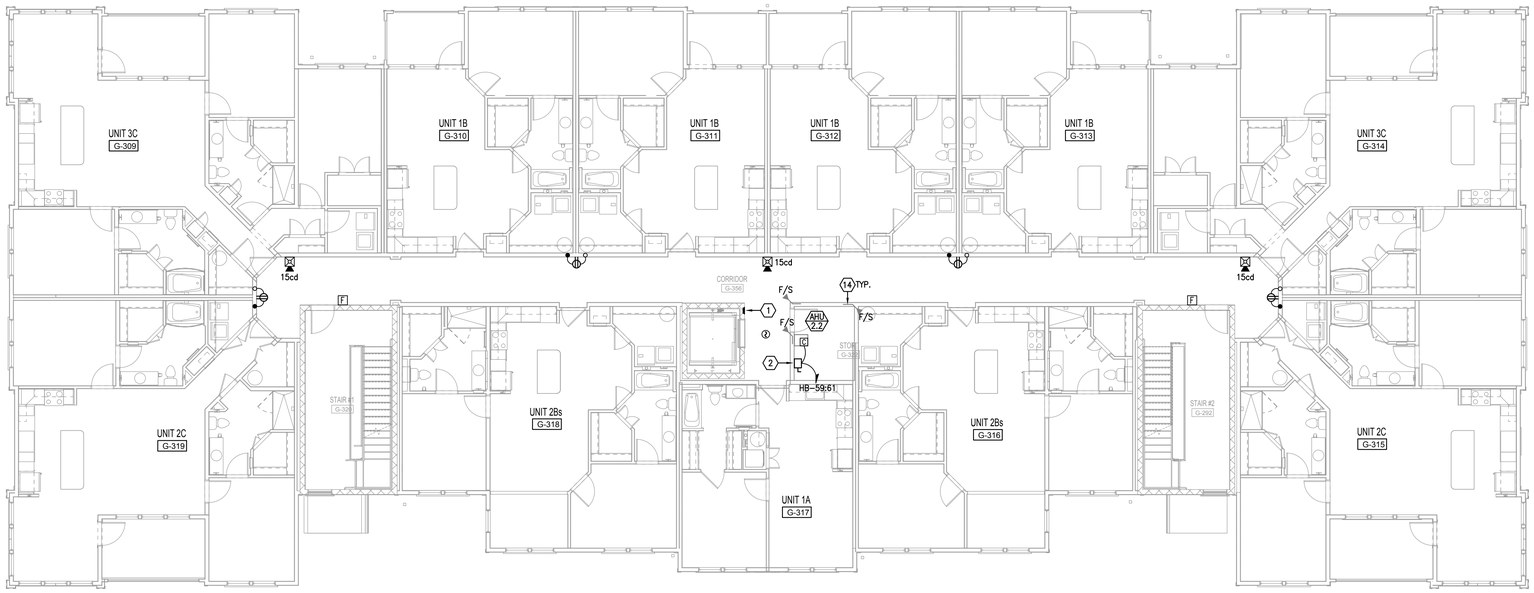

F1 BUILDING TYPE B - 2ND LEVEL - POWER & SYSTEMS
1/8" = 1'-0"

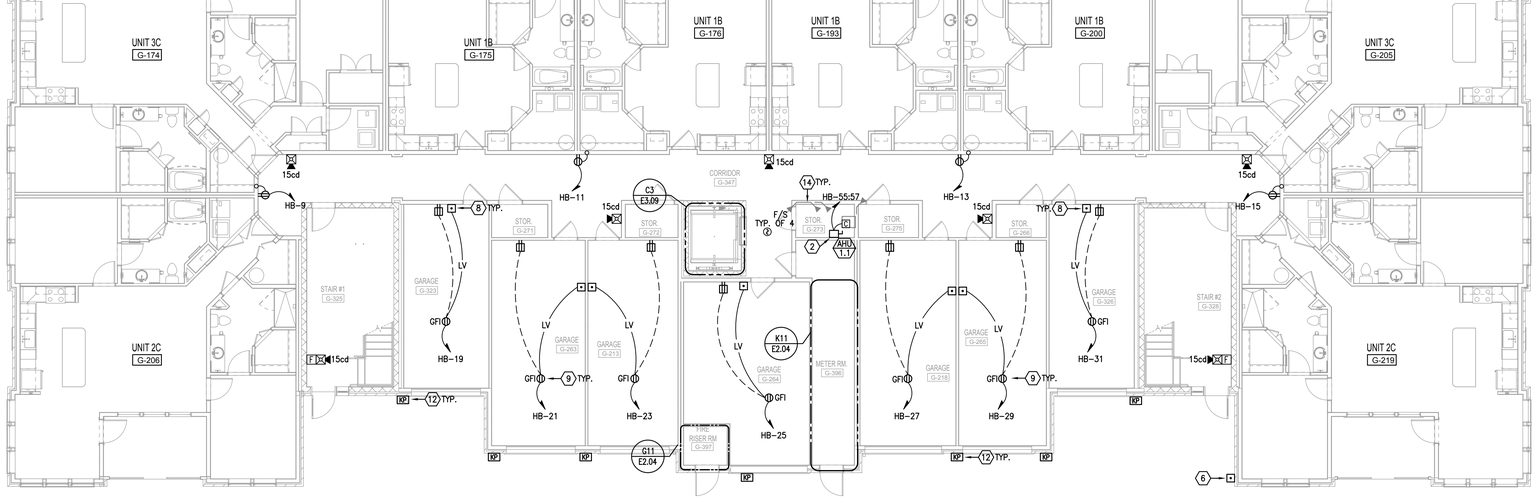

K1 BUILDING TYPE B - GROUND LEVEL - POWER & SYSTEMS
1/8" = 1'-0"

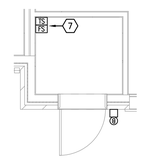

G11 ENLARGED PLAN - FIRE RISER ROOM
1/4" = 1'-0"

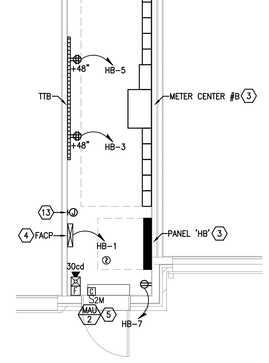

K11 ENLARGED PLAN - ELEC. ROOM
1/4" = 1'-0"

ISSUE HISTORY

No.	Date	Description
1	04/15/22	Permit Submission

REVISION HISTORY

No.	Date	Description

FUGLEBERG KOCH
2555 Temple Trail, Winter Park, FL 32789 (407) 629-0595
www. fuglebergkoch.com AA26002103

CONSULTANT
Joseph, Lawrence & Co Consulting Engineers
1180 HARWOOD AVE. SUITE 3000
ALTAMONTE SPRINGS, FLORIDA 32714
TEL: 321.972.4466
WWW.JLCENG.COM
CA NO. 4050 - E

JLC 22.0023.00

Drawn:	MJR/SMB
Checked:	BLS/AJB
Approved:	BLS/AJB
Date:	04/15/2022
Project #	5722

THE MADISON
HUNTSVILLE, AL

BUILDING TYPE B
GROUND & 2ND LEVEL
POWER & SYSTEMS

E2.04

© 2015 These documents and their contents are the property of FUGLEBERG KOCH - AA26002103, and are issued only for the specific project shown herein. Any reproductions, reuse, or modifications of these documents without the expressed written consent of Fugleberg Koch is prohibited by law.

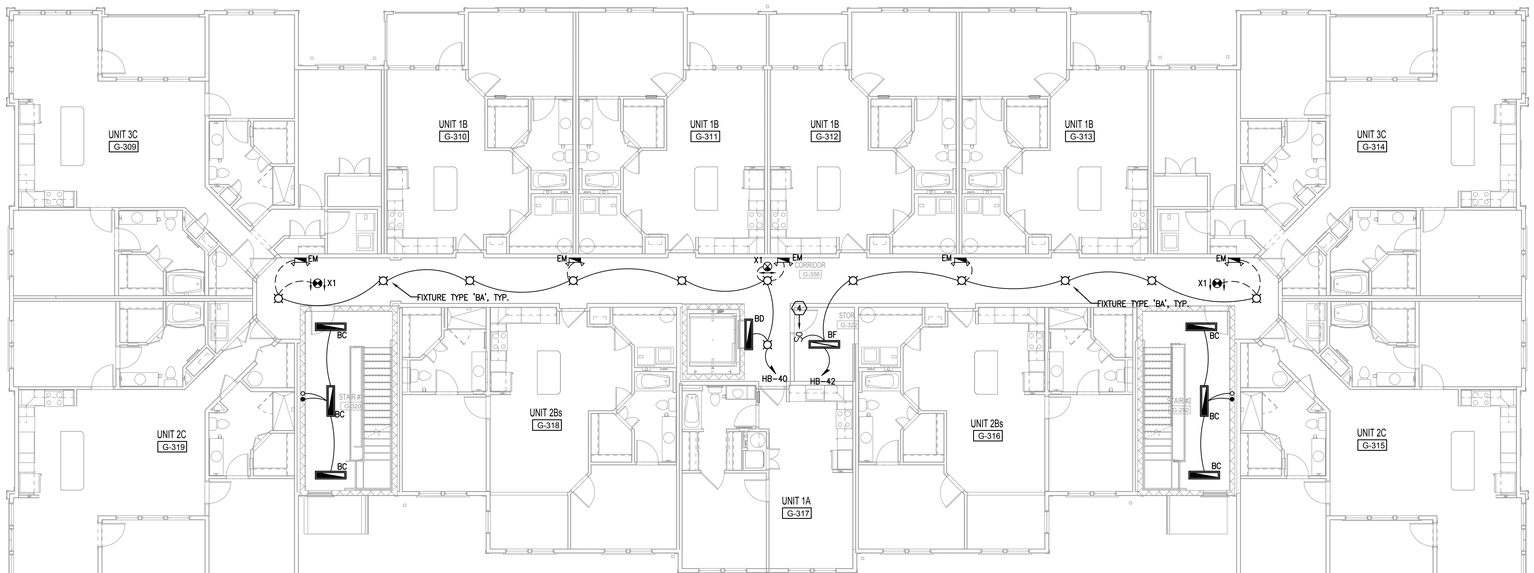

F1 BUILDING TYPE B - 2ND LEVEL - LIGHTING

1/8" = 1'-0"

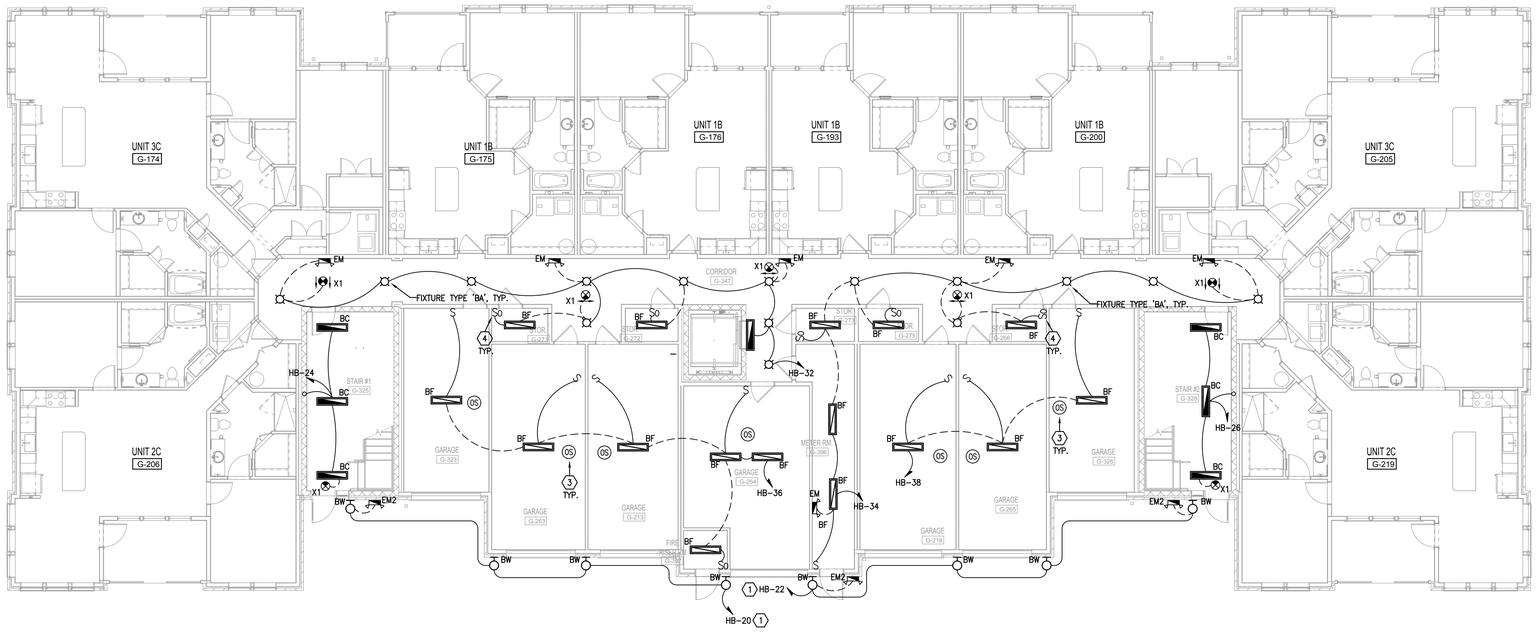

K1 BUILDING TYPE B - GROUND LEVEL - LIGHTING

1/8" = 1'-0"

GENERAL NOTES:

A. DO NOT SCALE ELECTRICAL DRAWING FOR ANY DIMENSIONS.

B. ALL WORK SHALL COMPLY WITH THE 2017 NATIONAL ELECTRICAL CODE, NATIONAL, STATE AND LOCAL CODES. PROVIDE GROUNDING AND BONDING PER NEC 250.

C. SEE SINGLE LINE DIAGRAM FOR FEEDER WIRE AND CONDUIT SIZE. ALL CIRCUITS NOT SIZED ON DRAWING SHALL BE INSTALLED TO MEET MINIMUM SIZE REQUIRED BY NEC. ALL CONDUCTORS SHALL HAVE AN EQUIPMENT GROUND WIRE SIZED PER NEC.

D. FIELD VERIFY EXACT LOCATION OF ALL DEVICES AND EQUIPMENT PRIOR TO ROUGH IN.

E. REFER TO ENLARGED TYPICAL UNIT PLANS FOR ALL ELECTRICAL IN UNITS.

F. 'NL' NEXT TO FIXTURE DESIGNATES FIXTURE TO BE CONNECTED AHEAD OF AUTOMATIC CONTROLS TO OPERATE CONTINUOUSLY.

G. ALL EMERGENCY LIGHTING FIXTURES AND EXIT SIGNS SHALL BE CONNECTED "HOT" TO THE INDICATED LOCAL LIGHTING CIRCUIT.

H. EMERGENCY ILLUMINATION SHALL BE PROVIDED FOR A PERIOD OF 90 MINUTES IN THE EVENT OF FAILURE OF NORMAL LIGHTING. EMERGENCY LIGHTING FACILITIES SHALL BE ARRANGED TO PROVIDE INITIAL ILLUMINATION THAT IS AT LEAST AN AVERAGE OF 1 FOOTCANDLE (10 LUX) AND A MINIMUM AT ANY POINT OF 0.1 FOOTCANDLE (1 LUX) MEASURED ALONG THE PATH OF EGRESS AT FLOOR LEVEL. ILLUMINATION LEVELS SHALL BE PERMITTED TO DECLINE TO 0.6 FOOTCANDLE (6 LUX) AVERAGE AND A MINIMUM AT ANY POINT OF 0.06 FOOTCANDLE (0.6 LUX) AT THE END OF THE EMERGENCY LIGHTING TIME DURATION. A MAXIMUM-TO-MINIMUM ILLUMINATION UNIFORMITY RATIO OF 40:1 SHALL NOT BE EXCEEDED.

REFERENCE NOTES: (X)

(1) CONNECT CIRCUIT VIA LIGHTING CONTACTOR FOR AUTOMATIC CONTROL OF FIXTURES.

(2) NOT USED.

(3) PROVIDE CEILING MOUNTED OCCUPANCY SENSOR FOR AUTOMATIC CONTROL OF ROOM LIGHTING. SENSOR SHALL OVERRIDE WALL CONTROL AND "TURN OFF" ROOM LIGHTS IF ROOM UNOCCUPIED FOR MORE THAN 20 MINUTES. PROVIDE ADDITIONAL SENSORS, RELAY PACKS, CONTROL WIRING, ETC. AS REQUIRED FOR COMPLETE COVERAGE OF ROOM AND CIRCUITS/SWITCH LEGS SHOWN. CONTROLS SHALL BE "MANUAL ON/AUTOMATIC OFF" WITH THE EXCEPTION OF RESTROOMS, PUBLIC CORRIDORS, AND LOBBIES. THESE AREAS SHALL BE FULLY AUTOMATIC ON/AUTOMATIC OFF" IN ACCORDANCE WITH THE INTERNATIONAL BUILDING CODE SECTION 107.2.1.

(4) PROVIDE WALL MOUNTED, DUAL TECHNOLOGY, LOW VOLTAGE VACANCY SENSOR, WATTSTOPPER #DW-100-24 (OR APPROVED SUBSTITUTION) FOR AUTOMATIC CONTROL OF LIGHTING. CONNECT LIGHTING IN SPACE AS SHOWN ON PLANS VIA WATTSTOPPER LIGHTING POWER PACK #BZ-200 (OR APPROVED SUBSTITUTION). PROVIDE ALL ADDITIONAL POWER PACKS, RELAYS, SENSORS AS REQUIRED FOR COMPLETE COVERAGE OF SPACE AND SWITCHING AS SHOWN ON PLANS. INSTALLATION SHALL COMPLY WITH THE INTERNATIONAL BUILDING CODE SECTION 107.2.1.

ISSUE HISTORY

No.	Date	Description
1	04/15/22	Permit Submission

REVISION HISTORY

No.	Date	Description

FUGLEBERG KOCH

2555 Temple Trail, Winter Park, FL 32789 (407) 629-0595
www. fuglebergkoch.com AA26002103

CONSULTANT

Joseph, Lawrence & Co
Consulting Engineers
1180 HARWOOD AVE. SUITE 3000
ALTAMONTE SPRINGS, FLORIDA 32714
TEL: 321.972.4466
WWW.JLCENG.COM
CA NO. 4050 - E

JLC 22.0023.00

A.B.A.M. ENGINEERS, INC. 31122 PROFESSIONAL ENGINEER LAKE L. SUDDUTH

Drawn:	MJR/SMB
Checked:	BLS/AJB
Approval:	BLS/AJB
Date:	04/15/2022
Project #	5722

THE MADISON

HUNTSVILLE, AL

BUILDING TYPE B
GROUND & 2ND LEVEL
LIGHTING

E2.04A

© 2015 These documents and their contents are the property of FUGLEBERG KOCH - AA26002103, and are to be used only for the specific project for which they were prepared. Any reproduction, reuse, or modification of these documents without the expressed written consent of Fugleberg Koch is prohibited by law.

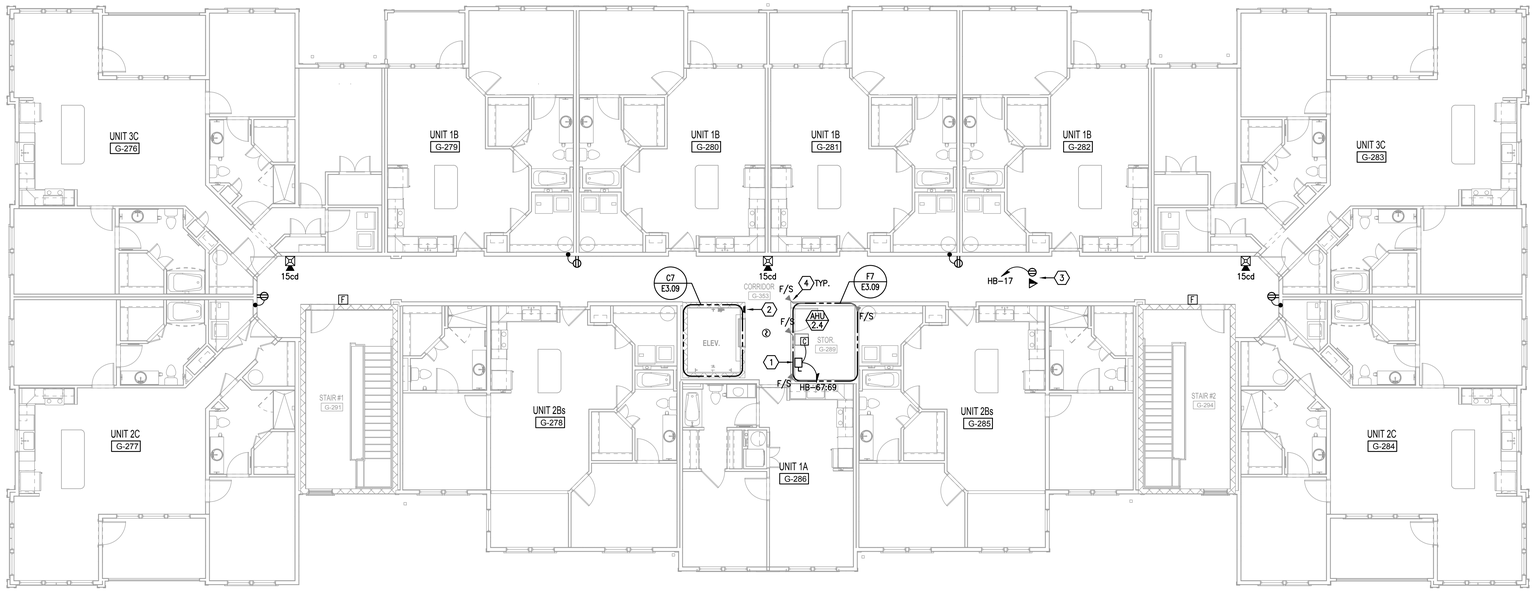

F1 BUILDING TYPE B - 4TH LEVEL - POWER & SYSTEMS
1/8" = 1'-0"

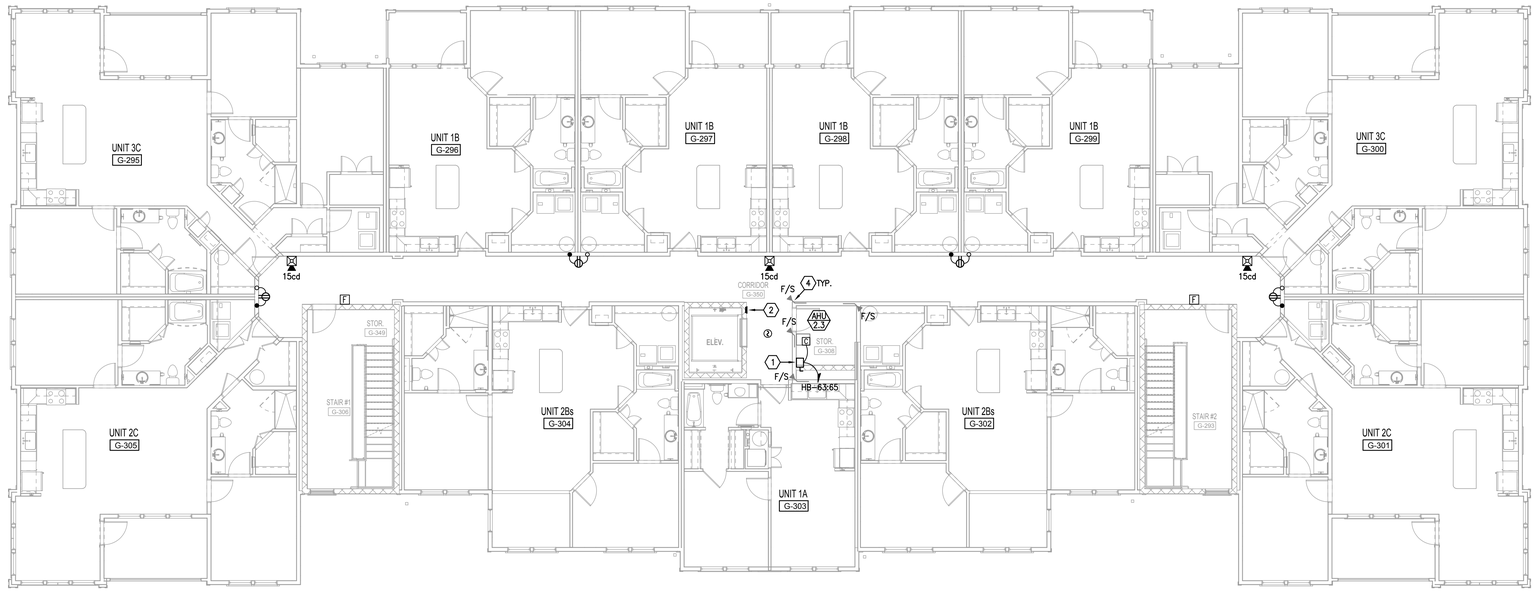

K1 BUILDING TYPE B - 3RD LEVEL - POWER & SYSTEMS
1/8" = 1'-0"

GENERAL NOTES:

A. DO NOT SCALE ELECTRICAL DRAWING FOR ANY DIMENSIONS.

B. ALL WORK SHALL COMPLY WITH THE 2017 NATIONAL ELECTRICAL CODE, NATIONAL, STATE AND LOCAL CODES. PROVIDE GROUNDING AND BONDING PER NEC 250.

C. SEE SINGLE LINE DIAGRAM FOR FEEDER WIRE AND CONDUIT SIZE. ALL CIRCUITS NOT SIZED ON DRAWING SHALL BE INSTALLED TO MEET MINIMUM SIZE REQUIRED BY NEC. ALL CONDUCTORS SHALL HAVE AN EQUIPMENT GROUND WIRE SIZED PER NEC.

D. FIELD VERIFY EXACT LOCATION OF ALL DEVICES AND EQUIPMENT PRIOR TO ROUGH IN.

E. REFER TO ENLARGED TYPICAL UNIT PLANS FOR ALL ELECTRICAL IN UNITS.

REFERENCE NOTES: (X)

1. ELECTRICAL CONTRACTOR SHALL COORDINATE DISCONNECT AND FUSE REQUIREMENTS FOR MECHANICAL UNIT WITH MECHANICAL CONTRACTOR AND EQUIPMENT MANUFACTURER PRIOR TO ROUGH-IN AND PROVIDE AS REQUIRED. COORDINATE LOCATION OF DISCONNECT WITH OWNER AND MECHANICAL CONTRACTOR PRIOR TO ROUGH-IN. LOCATE AS REQUIRED TO MAINTAIN NEC CLEARANCES.
2. PROVIDE TWO-WAY COMMUNICATION SYSTEM AND CABLING TO MAIN BASE STATION AS REQUIRED BY 2018 FFPC, AND 2018 NFPA 101 LIFE SAFETY CODE. COORDINATE LOCATION WITH OWNER AND AUTHORITY HAVING JURISDICTION PRIOR TO ROUGH-IN.
3. PROVIDE 120V RECEPTACLE AND DATA OUTLET IN ATTIC SPACE FOR CONNECTION OF WATER METER REPEATERS. COORDINATE EXACT LOCATION AND REQUIREMENTS WITH EQUIPMENT INSTALLER PRIOR TO ROUGH-IN.
4. PROVIDE 120V CIRCUIT FOR CONNECTION OF FIRE/SMOKE DAMPER. CONNECT TO CIRCUIT HA-39. COORDINATE LOCATION AND CONNECTION REQUIREMENTS WITH MECHANICAL CONTRACTOR PRIOR TO ROUGH-IN.

U.S. DEPARTMENT OF HOUSING AND URBAN DEVELOPMENT

ISSUE HISTORY

No.	Date	Description
1	04/15/22	Permit Submission

REVISION HISTORY

No.	Date	Description

FUGLEBERG KOCH
2555 Temple Trail, Winter Park, FL 32789 (407) 629-0595
www.fuglebergkoch.com AA26002103

CONSULTANT
Joseph, Lawrence & Co
Consulting Engineers
1180 HARWOOD AVE. SUITE 3000
ALTAMONTE SPRINGS, FLORIDA 32714
TEL: 321.972.4466
WWW.JLCENG.COM
CA NO. 4050 - E

JLC 22.0023.00

ALABAMA LICENSED PROFESSIONAL ENGINEER No. 31127 BLAKE L. SUDDETH

THE MADISON
HUNTSVILLE, AL

Drawn:	MJR/SMB
Checked:	BLS/AJB
Approval:	BLS/AJB
Date:	04/15/2022
Project #:	5722

BUILDING TYPE B
3RD & 4TH LEVEL
POWER & SYSTEMS

E2.05

© 2018 These documents and their contents are the property of FUGLEBERG KOCH - AA26002103, and are issued only for the specific project noted on these drawings. Any reproductions, revisions, or modifications of these documents without the expressed written consent of Fugleberg Koch is prohibited by law.

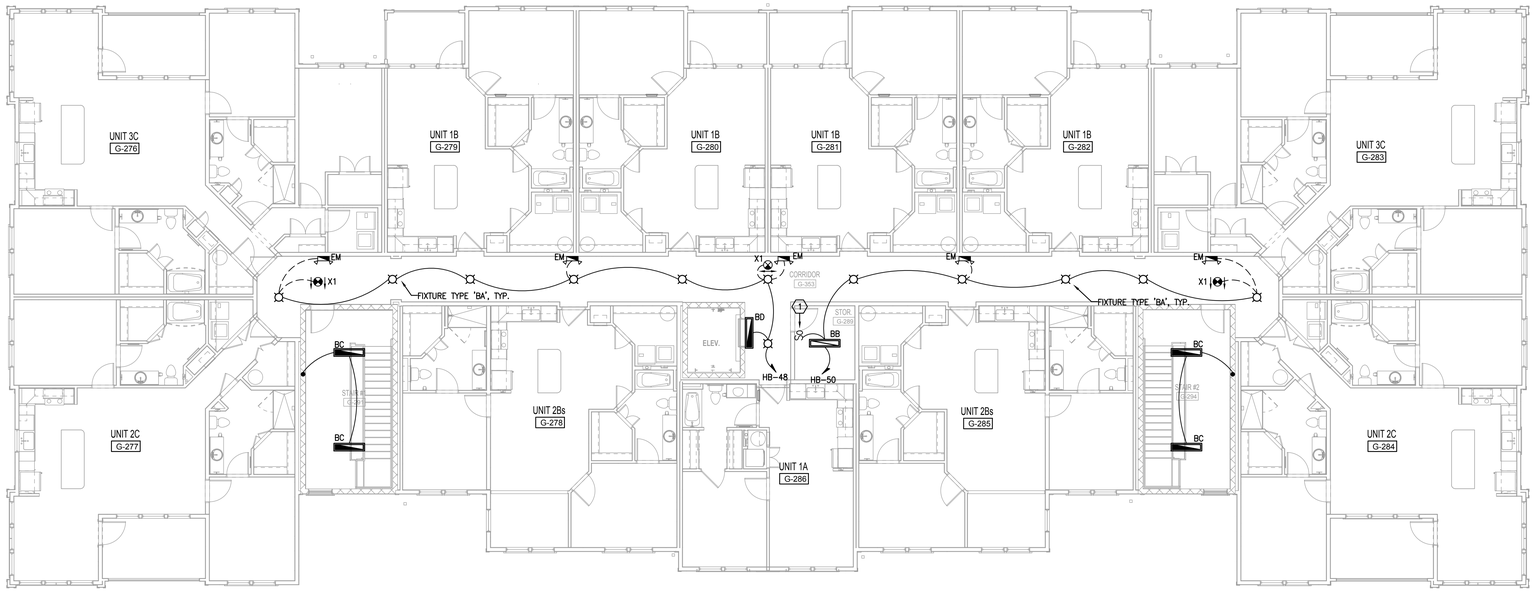

F1 BUILDING TYPE B - 4TH LEVEL - LIGHTING
1/8" = 1'-0"

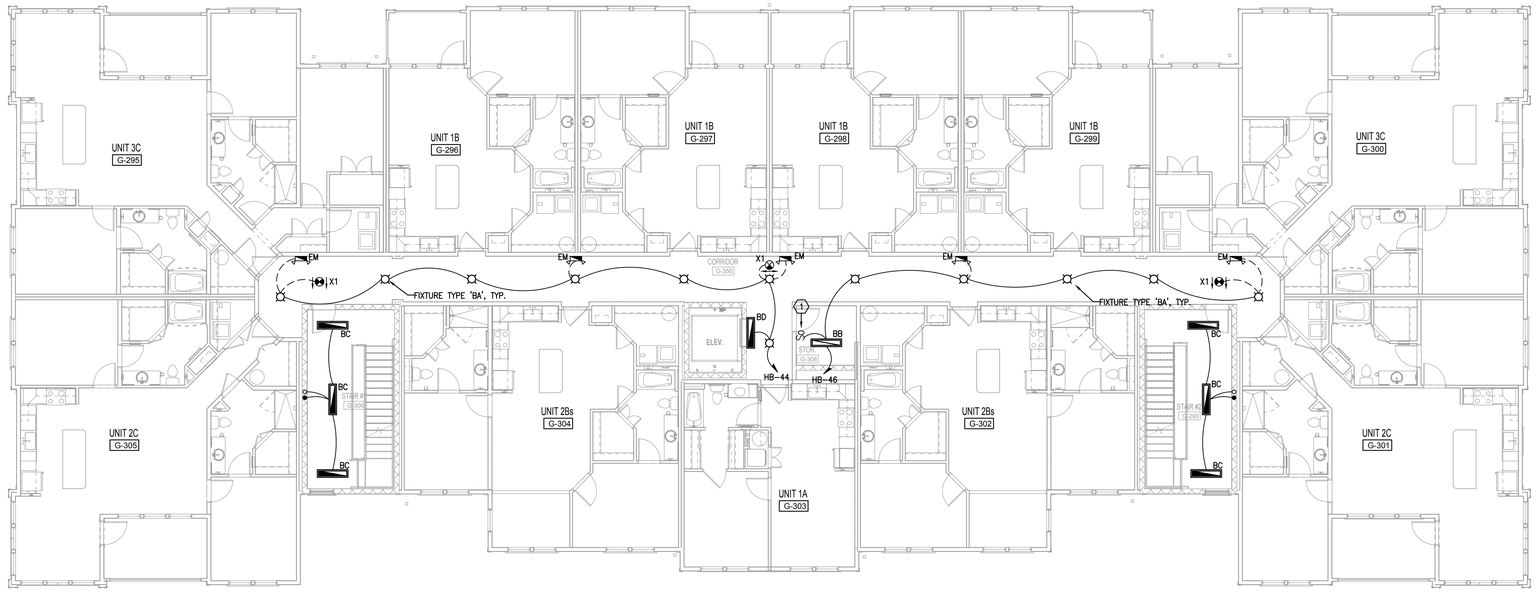

K1 BUILDING TYPE B - 3RD LEVEL - LIGHTING
1/8" = 1'-0"

GENERAL NOTES:

A. DO NOT SCALE ELECTRICAL DRAWING FOR ANY DIMENSIONS.

B. ALL WORK SHALL COMPLY WITH THE 2017 NATIONAL ELECTRICAL CODE, NATIONAL, STATE AND LOCAL CODES. PROVIDE GROUNDING AND BONDING PER NEC 250.

C. SEE SINGLE LINE DIAGRAM FOR FEEDER WIRE AND CONDUIT SIZE. ALL CIRCUITS NOT SIZED ON DRAWING SHALL BE INSTALLED TO MEET MINIMUM SIZE REQUIRED BY NEC. ALL CONDUCTORS SHALL HAVE AN EQUIPMENT GROUND WIRE SIZED PER NEC.

D. FIELD VERIFY EXACT LOCATION OF ALL DEVICES AND EQUIPMENT PRIOR TO ROUGH IN.

E. REFER TO ENLARGED TYPICAL UNIT PLANS FOR ALL ELECTRICAL IN UNITS.

F. 'NL' NEXT TO FIXTURE DESIGNATES FIXTURE TO BE CONNECTED AHEAD OF AUTOMATIC CONTROLS TO OPERATE CONTINUOUSLY.

G. ALL EMERGENCY LIGHTING FIXTURES AND EXIT SIGNS SHALL BE CONNECTED "HOT" TO THE INDICATED LOCAL LIGHTING CIRCUIT.

H. EMERGENCY ILLUMINATION SHALL BE PROVIDED FOR A PERIOD OF 90 MINUTES IN THE EVENT OF FAILURE OF NORMAL LIGHTING. EMERGENCY LIGHTING FACILITIES SHALL BE ARRANGED TO PROVIDE INITIAL ILLUMINATION THAT IS AT LEAST AN AVERAGE OF 1 FOOTCANDLE (10 LUX) AND A MINIMUM AT ANY POINT OF 0.1 FOOTCANDLE (1 LUX) MEASURED ALONG THE PATH OF EGRESS AT FLOOR LEVEL. ILLUMINATION LEVELS SHALL BE PERMITTED TO DECLINE TO 0.6 FOOTCANDLE (6 LUX) AVERAGE AND A MINIMUM AT ANY POINT OF 0.06 FOOTCANDLE (0.6 LUX) AT THE END OF THE EMERGENCY LIGHTING TIME DURATION. A MAXIMUM-TO-MINIMUM ILLUMINATION UNIFORMITY RATIO OF 40:1 SHALL NOT BE EXCEEDED.

REFERENCE NOTES: (X)

(1) PROVIDE WALL MOUNTED, DUAL TECHNOLOGY, LOW VOLTAGE VACANCY SENSOR, WATTSTOPPER #DW-100-24 (OR APPROVED SUBSTITUTION) FOR AUTOMATIC CONTROL OF LIGHTING. CONNECT LIGHTING IN SPACE AS SHOWN ON PLANS VIA WATTSTOPPER LIGHTING POWER PACK #BZ-200 (OR APPROVED SUBSTITUTION). PROVIDE ALL ADDITIONAL POWER PACKS, RELAYS, SENSORS AS REQUIRED FOR COMPLETE COVERAGE OF SPACE AND SWITCHING AS SHOWN ON PLANS. INSTALLATION SHALL COMPLY WITH THE INTERNATIONAL BUILDING CODE SECTION 107.2.1.

(2) NOT USED.

U.S. DEPARTMENT OF HOUSING AND URBAN DEVELOPMENT

ISSUE HISTORY

No.	Date	Description
1	04/15/22	Permit Submission

REVISION HISTORY

No.	Date	Description

FUGLEBERG KOCH
2555 Temple Trail, Winter Park, FL 32789 (407) 629-0595
www. fuglebergkoch.com AA26002103

CONSULTANT
Joseph, Lawrence & Co
Consulting Engineers
1180 HARWOOD AVE. SUITE 3000
ALTAMONTE SPRINGS, FLORIDA 32714
TEL: 321.972.4466
WWW.JLCENG.COM
CA NO. 4050 - E

JLC 22.0023.00

A.B.A. ARCHITECT INC. 31122 PROFESSIONAL ENGINEER BLAKE L. SUDDUTH

Drawn:	MJR/SMB
Checked:	BLS/AJB
Approved:	BLS/AJB
Date:	04/15/2022
Project #	5722

THE MADISON
HUNTSVILLE, AL

BUILDING TYPE B
3RD & 4TH LEVEL
LIGHTING

E2.05A

© 2015 These documents and their contents are the property of FUGLEBERG KOCH - AA26002105, and are to be used only for the specific project for which they were prepared. Any reproduction, reuse, or modification of these documents without the expressed written consent of Fugleberg Koch is prohibited by law.

GENERAL NOTES:

A. DO NOT SCALE ELECTRICAL DRAWING FOR ANY DIMENSIONS.

B. ALL WORK SHALL COMPLY WITH THE 2017 NATIONAL ELECTRICAL CODE, NATIONAL, STATE AND LOCAL CODES. PROVIDE GROUNDING AND BONDING PER NEC 250.

C. SEE SINGLE LINE DIAGRAM FOR FEEDER WIRE AND CONDUIT SIZE. ALL CIRCUITS NOT SIZED ON DRAWING SHALL BE INSTALLED TO MEET MINIMUM SIZE REQUIRED BY NEC. ALL CONDUCTORS SHALL HAVE AN EQUIPMENT GROUND WIRE SIZED PER NEC.

D. FIELD VERIFY EXACT LOCATION OF ALL DEVICES AND EQUIPMENT PRIOR TO ROUGH IN.

REFERENCE NOTES: (X)

(1) ELECTRICAL CONTRACTOR SHALL COORDINATE DISCONNECT AND FUSE REQUIREMENTS FOR MECHANICAL UNIT WITH MECHANICAL CONTRACTOR AND EQUIPMENT MANUFACTURER PRIOR TO ROUGH-IN AND PROVIDE AS REQUIRED. CONNECT CONDENSING UNIT TO CORRESPONDING UNIT PANEL. REFER TO TYPICAL UNIT PLANS AND SCHEDULES FOR CIRCUITING AND SIZING INFORMATION. COORDINATE LOCATION OF DISCONNECT WITH OWNER AND MECHANICAL CONTRACTOR PRIOR TO ROUGH-IN. LOCATE DISCONNECT ON CONDENSING UNIT RACK AS REQUIRED TO MAINTAIN NEC CLEARANCES.

(2) ELECTRICAL CONTRACTOR SHALL COORDINATE DISCONNECT AND FUSE REQUIREMENTS FOR MECHANICAL UNIT WITH MECHANICAL CONTRACTOR AND EQUIPMENT MANUFACTURER PRIOR TO ROUGH-IN AND PROVIDE AS REQUIRED. COORDINATE LOCATION OF DISCONNECT WITH OWNER AND MECHANICAL CONTRACTOR PRIOR TO ROUGH-IN. LOCATE DISCONNECT ON CONDENSING UNIT RACK AS REQUIRED TO MAINTAIN NEC CLEARANCES.

(3) CONNECT INTERIOR MECHANICAL MINI-SPLIT UNIT MAU-X THROUGH EXTERIOR UNIT MCU-X. CONNECT PER MANUFACTURER'S RECOMMENDATIONS, AND PROVIDE ALL CONTROL WIRING, CONDUIT, ETC. AS REQUIRED.

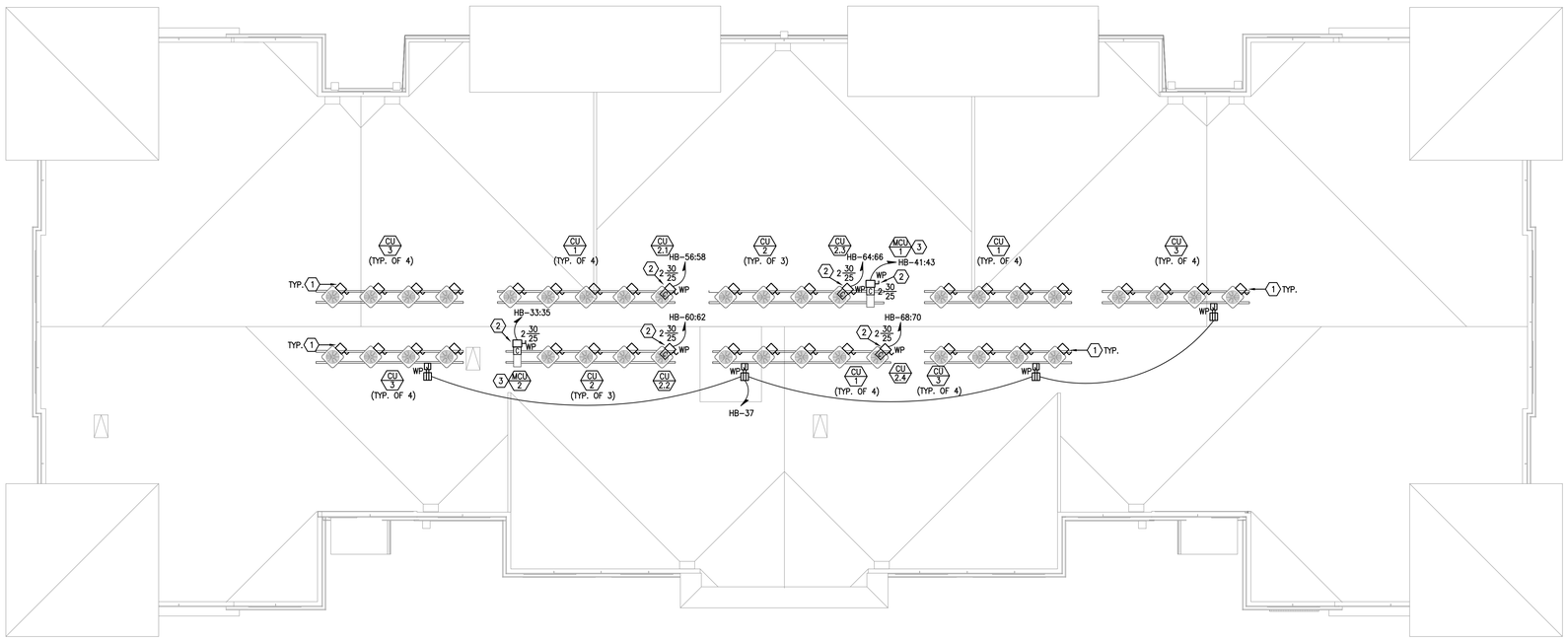

K1 BUILDING TYPE B - ROOF PLAN - ELECTRICAL
1/8" = 1'-0"

U.S. DEPARTMENT OF HOUSING AND URBAN DEVELOPMENT

ISSUE HISTORY

No.	Date	Description
1	04/15/22	Permit Submission

REVISION HISTORY

No.	Date	Description

© 2015 These documents and their contents are the property of FUGLEBERG KOCH - ARCHITECTS, and are loaned only for the specific project cited on these drawings. Any reproductions, versions, or modifications of these documents without the expressed written consent of Fugleberg Koch is prohibited by law.

FUGLEBERG KOCH
2555 Temple Trail, Winter Park, FL 32789 (407) 629-0595
www.fuglebergkoch.com AA26002103

CONSULTANT
Joseph, Lawrence & Co
Consulting Engineers
1180 HARWOOD AVE. SUITE 3000
ALTAMONTE SPRINGS, FLORIDA 32714
TEL: 321.972.4466
WWW.JLCENG.COM
CA NO. 4050 - E

JLC 22.0023.00

ALABAMA LICENSED PROFESSIONAL ENGINEER No. 31122 ENGINEER BLAKE L. SUDDUTH

Drawn:	MJR/SMB
Checked:	BLS/AJB
Approval:	BLS/AJB
Date:	04/15/2022
Project #	5722

THE MADISON
HUNTSVILLE, AL

BUILDING TYPE B
ROOF PLAN
ELECTRICAL

E2.06

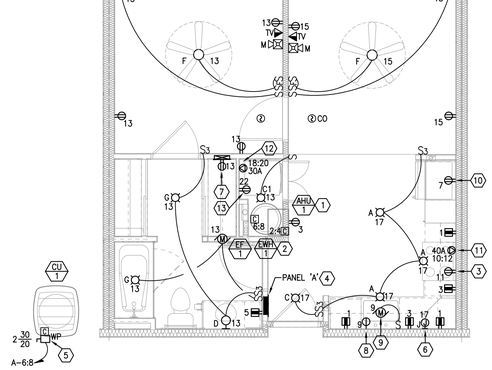

G5 UNIT 1A - ELECTRICAL
1/4" = 1'-0"

GENERAL NOTES:

A. DO NOT SCALE ELECTRICAL DRAWINGS FOR ANY DIMENSIONS.

B. ALL WORK SHALL COMPLY WITH THE 2017 NATIONAL ELECTRICAL CODE, NATIONAL, STATE AND LOCAL CODES. PROVIDE GROUNDING AND BONDING PER NEC 250.

C. SEE SINGLE LINE DIAGRAM FOR FEEDER WIRE AND CONDUIT SIZE. ALL CIRCUITS NOT SIZED ON DRAWING SHALL BE INSTALLED TO MEET MINIMUM SIZE REQUIRED BY NEC. ALL CONDUCTORS SHALL HAVE AN EQUIPMENT GROUND WIRE SIZED PER NEC.

D. WHERE AVAILABLE THE ELECTRICAL CONTRACTOR SHALL COORDINATE THE EXACT LOCATION OF ALL DEVICES PER THE DIMENSIONED ARCHITECTURAL DRAWINGS (KITCHENS, BATHROOMS, ETC.), ELEVATIONS AND DETAILS PRIOR TO ROUGH-IN. THE ELECTRICAL CONTRACTOR SHALL COORDINATE WITH THE GENERAL CONTRACTOR AND FRAMING CONTRACTOR TO PROVIDE ALL ADDITIONAL FRAMING AND BLOCKING WHERE DEVICES ARE REQUIRED TO BE IN A SPECIFIC LOCATION PER FAIR HOUSING REQUIREMENTS, ADA OR LOCAL AUTHORITY HAVING JURISDICTION.

E. ALL 120V, SINGLE PHASE, 15A AND 20A BRANCH CIRCUITS SUPPLYING OUTLETS OR DEVICES INSTALLED IN DWELLING UNIT KITCHENS, FAMILY ROOMS, DINING ROOMS, LIVING ROOMS, PARLORS, LIBRARIES, DENS, BEDROOMS, SUNROOMS, RECREATION ROOMS, CLOSETS, HALLWAYS, LAUNDRY AREAS, OR SIMILAR ROOMS OR AREAS SHALL BE PROTECTED BY A LISTED ARC-FAULT CIRCUIT INTERRUPTER INSTALLED TO PROVIDE PROTECTION OF THE BRANCH CIRCUIT AS REQUIRED BY NEC 210.12 AND LOCAL ORDINANCES.

F. ALL 125V, 15A AND 20A RECEPTACLES INSTALLED IN DWELLING UNITS SHALL BE LISTED TAMPER-RESISTANT AS REQUIRED BY NEC 406.12.

G. ALL SMOKE ALARMS IN DWELLING UNITS SHALL BE INTERCONNECTED AND INSTALLED IN ACCORDANCE WITH NFPA 101, 2018 EDITION, SECTION 30.3.4.5.

H. ALL FIRE ALARM NOTIFICATION APPLIANCES LOCATED IN SLEEPING AREAS SHALL BE OF A LOW FREQUENCY SIGNAL TYPE IN ACCORDANCE WITH NFPA 72, 2016 EDITION, SECTION 18.4.5.3.

REFERENCE NOTES: (X)

(1) CONNECT MECHANICAL UNIT VIA INTEGRAL DISCONNECT PROVIDED WITH UNIT. COORDINATE EXACT REQUIREMENTS WITH MECHANICAL CONTRACTOR PRIOR TO ROUGH-IN.

(2) PROVIDE CIRCUIT BREAKER FEEDING WATER HEATER WITH "LOCK OUT" STYLE BREAKER HANDLE PER NEC 422.31.

(3) PROVIDE 120V OUTLET FOR MICROWAVE/HOOD CONNECTION. INSTALL OUTLET AT 78"AFF INSIDE THE CABINET. COORDINATE LOCATION WITH MILLWORK INSTALLER PRIOR TO ROUGH-IN.

(4) REFER TO POWER RISER DIAGRAM AND UNIT PANEL SCHEDULES FOR ADDITIONAL INFORMATION.

(5) PROVIDE ELECTRICAL CONNECTION TO UNIT'S ASSOCIATED CONDENSING UNIT. COORDINATE LOCATION WITH MECHANICAL CONTRACTOR PRIOR TO ROUGH-IN. COORDINATE ROUTING OF CONDUIT THROUGH BUILDING WITH GENERAL CONTRACTOR PRIOR TO ROUGH-IN. INCREASE WIRE SIZE AS REQUIRED FOR CIRCUIT LENGTH PER FBC AND NEC.

(6) PROVIDE 120V WALL MOUNTED JUNCTION BOX FOR UNDER CABINET LIGHTING. COORDINATE EXACT LOCATION AND CONNECTION REQUIREMENTS WITH OWNER AND EQUIPMENT SUPPLIER PRIOR TO ROUGH-IN.

(7) 12"x18"x3" DEEP FLUSH MOUNTED CABINET WITH DOOR FOR TELEPHONE AND TV CABLE TERMINATIONS. "NTC" CABINET. COORDINATE MOUNTING HEIGHT AND EXACT LOCATION WITH ALL TRADES PRIOR TO ROUGH-IN. CONTRACTOR TO PULL AND LABEL ALL LINES IN STAR CONFIGURATION.

(8) PROVIDE 120V CONNECTION FOR DISHWASHER. COORDINATE CONNECTION REQUIREMENTS AND LOCATION WITH EQUIPMENT INSTALLER PRIOR TO ROUGH-IN.

(9) PROVIDE 120V CONNECTION FOR GARBAGE DISPOSAL. COORDINATE CONNECTION REQUIREMENTS AND LOCATION WITH EQUIPMENT INSTALLER PRIOR TO ROUGH-IN.

(10) PROVIDE 120V OUTLET FOR REFRIGERATOR, 48"AFF.

(11) PROVIDE 250V/40A/1ø OUTLET FOR RANGE. COORDINATE PLUG CONFIGURATION AND LOCATION WITH EQUIPMENT INSTALLER PRIOR TO ROUGH-IN.

(12) PROVIDE 250V/30A/1ø OUTLET FOR DRYER. COORDINATE PLUG CONFIGURATION AND LOCATION WITH EQUIPMENT INSTALLER PRIOR TO ROUGH-IN.

(13) PROVIDE 120V OUTLET FOR WASHER, 36"AFF.

U.S. DEPARTMENT OF HOUSING AND URBAN DEVELOPMENT

ISSUE HISTORY

No.	Date	Description
1	04/15/22	Permit Submission

REVISION HISTORY

No.	Date	Description

FUGLEBERG KOCH
2555 Temple Trail, Winter Park, FL 32789 (407) 629-0595
www. fuglebergkoch.com AA26002103

CONSULTANT
Joseph, Lawrence & Co
Consulting Engineers
1180 HARWOOD AVE. SUITE 3000
ALTAMONTE SPRINGS, FLORIDA 32714
TEL: 321.972.4466
WWW.JLCENG.COM
CA NO. 4050 - E

JLC 22.0023.00

ALABAMA LICENSED PROFESSIONAL ENGINEER BRYCE L. SUDDUTH

Drawn:	MJR/SMB
Checked:	BLS/AJB
Approval:	BLS/AJB
Date:	04/15/2022
Project #:	5722

THE MADISON
HUNTSVILLE, AL

ENLARGED UNIT PLANS
ELECTRICAL

E3.01

© 2019 These documents and their contents are the property of FUGLEBERG KOCH - AA26002103. Any reproductions, versions, or modifications of these documents without the expressed written consent of Fugleberg Koch is prohibited by law.

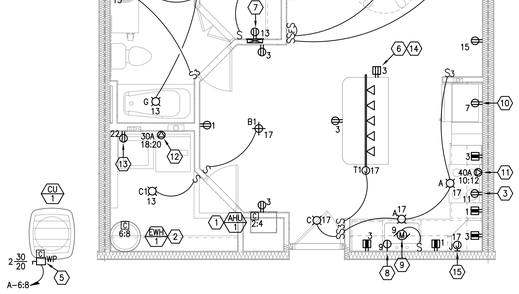

G5 UNIT 1B - ELECTRICAL
1/4" = 1'-0"

GENERAL NOTES:

A. DO NOT SCALE ELECTRICAL DRAWINGS FOR ANY DIMENSIONS.

B. ALL WORK SHALL COMPLY WITH THE 2017 NATIONAL ELECTRICAL CODE, NATIONAL, STATE AND LOCAL CODES. PROVIDE GROUNDING AND BONDING PER NEC 250.

C. SEE SINGLE LINE DIAGRAM FOR FEEDER WIRE AND CONDUIT SIZE. ALL CIRCUITS NOT SIZED ON DRAWING SHALL BE INSTALLED TO MEET MINIMUM SIZE REQUIRED BY NEC. ALL CONDUCTORS SHALL HAVE AN EQUIPMENT GROUND WIRE SIZED PER NEC.

D. WHERE AVAILABLE THE ELECTRICAL CONTRACTOR SHALL COORDINATE THE EXACT LOCATION OF ALL DEVICES PER THE DIMENSIONED ARCHITECTURAL DRAWINGS (KITCHENS, BATHROOMS, ETC.), ELEVATIONS AND DETAILS PRIOR TO ROUGH-IN. THE ELECTRICAL CONTRACTOR SHALL COORDINATE WITH THE GENERAL CONTRACTOR AND FRAMING CONTRACTOR TO PROVIDE ALL ADDITIONAL FRAMING AND BLOCKING WHERE DEVICES ARE REQUIRED TO BE IN A SPECIFIC LOCATION PER FAIR HOUSING REQUIREMENTS, ADA OR LOCAL AUTHORITY HAVING JURISDICTION.

E. ALL 120V, SINGLE PHASE, 15A AND 20A BRANCH CIRCUITS SUPPLYING OUTLETS OR DEVICES INSTALLED IN DWELLING UNIT KITCHENS, FAMILY ROOMS, DINING ROOMS, LIVING ROOMS, PARLORS, LIBRARIES, DENS, BEDROOMS, SUNROOMS, RECREATION ROOMS, CLOSETS, HALLWAYS, LAUNDRY AREAS, OR SIMILAR ROOMS OR AREAS SHALL BE PROTECTED BY A LISTED ARC-FAULT CIRCUIT INTERRUPTER INSTALLED TO PROVIDE PROTECTION OF THE BRANCH CIRCUIT AS REQUIRED BY NEC 210.12 AND LOCAL ORDINANCES.

F. ALL 125V, 15A AND 20A RECEPTACLES INSTALLED IN DWELLING UNITS SHALL BE LISTED TAMPER-RESISTANT AS REQUIRED BY NEC 406.12.

G. ALL SMOKE ALARMS IN DWELLING UNITS SHALL BE INTERCONNECTED AND INSTALLED IN ACCORDANCE WITH NFPA 101, 2018 EDITION, SECTION 30.3.4.5.

H. ALL FIRE ALARM NOTIFICATION APPLIANCES LOCATED IN SLEEPING AREAS SHALL BE OF A LOW FREQUENCY SIGNAL TYPE IN ACCORDANCE WITH NFPA 72, 2016 EDITION, SECTION 18.4.5.3.

REFERENCE NOTES: (X)

(1) CONNECT MECHANICAL UNIT VIA INTEGRAL DISCONNECT PROVIDED WITH UNIT. COORDINATE EXACT REQUIREMENTS WITH MECHANICAL CONTRACTOR PRIOR TO ROUGH-IN.

(2) PROVIDE CIRCUIT BREAKER FEEDING WATER HEATER WITH "LOCK OUT" STYLE BREAKER HANDLE PER NEC 422.31.

(3) PROVIDE 120V OUTLET FOR MICROWAVE/HOOD CONNECTION. INSTALL OUTLET AT 78"AFF INSIDE THE CABINET. COORDINATE LOCATION WITH MILLWORK INSTALLER PRIOR TO ROUGH-IN.

(4) REFER TO POWER RISER DIAGRAM AND UNIT PANEL SCHEDULES FOR ADDITIONAL INFORMATION.

(5) PROVIDE ELECTRICAL CONNECTION TO UNIT'S ASSOCIATED CONDENSING UNIT. COORDINATE LOCATION WITH MECHANICAL CONTRACTOR PRIOR TO ROUGH-IN. COORDINATE ROUTING OF CONDUIT THROUGH BUILDING WITH GENERAL CONTRACTOR PRIOR TO ROUGH-IN. INCREASE WIRE SIZE AS REQUIRED FOR CIRCUIT LENGTH PER FBC AND NEC.

(6) PROVIDE COMBINATION 120V TAMPER RESISTANT RECEPTACLE AND USB CHARGER OUTLET (LEVITON #T5632-W OR APPROVED SUBSTITUTION). COLOR AS SELECTED BY OWNER. PROVIDE JUNCTION BOX SIZED AS REQUIRED BY NEC AND MANUFACTURER FOR DEVICE. COORDINATE OUTLET LOCATION WITH OWNER PRIOR TO ROUGH-IN.

(7) 12"x18"x3" DEEP FLUSH MOUNTED CABINET WITH DOOR FOR TELEPHONE AND TV CABLE TERMINATIONS. "NTC" CABINET. COORDINATE MOUNTING HEIGHT AND EXACT LOCATION WITH ALL TRADES PRIOR TO ROUGH-IN. CONTRACTOR TO PULL AND LABEL ALL LINES IN STAR CONFIGURATION.

(8) PROVIDE 120V CONNECTION FOR DISHWASHER. COORDINATE CONNECTION REQUIREMENTS AND LOCATION WITH EQUIPMENT INSTALLER PRIOR TO ROUGH-IN.

(9) PROVIDE 120V CONNECTION FOR GARBAGE DISPOSAL. COORDINATE CONNECTION REQUIREMENTS AND LOCATION WITH EQUIPMENT INSTALLER PRIOR TO ROUGH-IN.

(10) PROVIDE 120V OUTLET FOR REFRIGERATOR, 48"AFF.

(11) PROVIDE 250V/40A/1ø OUTLET FOR RANGE. COORDINATE PLUG CONFIGURATION AND LOCATION WITH EQUIPMENT INSTALLER PRIOR TO ROUGH-IN.

(12) PROVIDE 250V/30A/1ø OUTLET FOR DRYER. COORDINATE PLUG CONFIGURATION AND LOCATION WITH EQUIPMENT INSTALLER PRIOR TO ROUGH-IN.

(13) PROVIDE 120V OUTLET FOR WASHER, 36"AFF.

(14) IN ISLAND LOCATIONS, LOCATE 120V RECEPTACLE IN LOW WALL BELOW COUNTER WITHIN 12" OF COUNTERTOP AS REQUIRED BY NEC 210.52(5). COORDINATE LOCATION WITH AHJ PRIOR TO ROUGH-IN.

(15) PROVIDE 120V WALL MOUNTED JUNCTION BOX FOR UNDER CABINET LIGHTING. COORDINATE EXACT LOCATION AND CONNECTION REQUIREMENTS WITH OWNER AND EQUIPMENT SUPPLIER PRIOR TO ROUGH-IN.

U.S. DEPARTMENT OF HOUSING AND URBAN DEVELOPMENT

ISSUE HISTORY

No.	Date	Description
1	04/15/22	Permit Submission

REVISION HISTORY

No.	Date	Description

FUGLEBERG KOCH
2555 Temple Trail, Winter Park, FL 32789 (407) 629-0595
www. fuglebergkoch.com AA26002103

CONSULTANT
Joseph, Lawrence & Co
Consulting Engineers
1180 HARWOOD AVE. SUITE 3000
ALTAMONTE SPRINGS, FLORIDA 32714
TEL: 321.972.4466
WWW.JLCENG.COM
CA NO. 4050 - E

JLC 22.0023.00

ALABAMA LICENSED No. 31127 PROFESSIONAL ENGINEER BRANDI L. SHUMATE

Drawn:	MJR/SMB
Checked:	BLS/AJB
Approval:	BLS/AJB
Date:	04/15/2022
Project #:	5722

THE MADISON
HUNTSVILLE, AL

ENLARGED UNIT PLANS ELECTRICAL

E3.02

© 2019 These documents and their contents are the property of FUGLEBERG KOCH. AA26002103. and are protected by law. Any reproductions, versions, or modifications of these documents without the expressed written consent of Fugleberg Koch is prohibited by law.

GENERAL NOTES:

A. DO NOT SCALE ELECTRICAL DRAWINGS FOR ANY DIMENSIONS.

B. ALL WORK SHALL COMPLY WITH THE 2017 NATIONAL ELECTRICAL CODE, NATIONAL, STATE AND LOCAL CODES. PROVIDE GROUNDING AND BONDING PER NEC 250.

C. SEE SINGLE LINE DIAGRAM FOR FEEDER WIRE AND CONDUIT SIZE. ALL CIRCUITS NOT SIZED ON DRAWING SHALL BE INSTALLED TO MEET MINIMUM SIZE REQUIRED BY NEC. ALL CONDUCTORS SHALL HAVE AN EQUIPMENT GROUND WIRE SIZED PER NEC.

D. WHERE AVAILABLE THE ELECTRICAL CONTRACTOR SHALL COORDINATE THE EXACT LOCATION OF ALL DEVICES PER THE DIMENSIONED ARCHITECTURAL DRAWINGS (KITCHENS, BATHROOMS, ETC.), ELEVATIONS AND DETAILS PRIOR TO ROUGH-IN. THE ELECTRICAL CONTRACTOR SHALL COORDINATE WITH THE GENERAL CONTRACTOR AND FRAMING CONTRACTOR TO PROVIDE ALL ADDITIONAL FRAMING AND BLOCKING WHERE DEVICES ARE REQUIRED TO BE IN A SPECIFIC LOCATION PER FAIR HOUSING REQUIREMENTS, ADA OR LOCAL AUTHORITY HAVING JURISDICTION.

E. ALL 120V, SINGLE PHASE, 15A AND 20A BRANCH CIRCUITS SUPPLYING OUTLETS OR DEVICES INSTALLED IN DWELLING UNIT KITCHENS, FAMILY ROOMS, DINING ROOMS, LIVING ROOMS, PARLORS, LIBRARIES, DENS, BEDROOMS, SUNROOMS, RECREATION ROOMS, CLOSETS, HALLWAYS, LAUNDRY AREAS, OR SIMILAR ROOMS OR AREAS SHALL BE PROTECTED BY A LISTED ARC-FAULT CIRCUIT INTERRUPTER INSTALLED TO PROVIDE PROTECTION OF THE BRANCH CIRCUIT AS REQUIRED BY NEC 210.12 AND LOCAL ORDINANCES.

F. ALL 125V, 15A AND 20A RECEPTACLES INSTALLED IN DWELLING UNITS SHALL BE LISTED TAMPER-RESISTANT AS REQUIRED BY NEC 406.12.

G. ALL SMOKE ALARMS IN DWELLING UNITS SHALL BE INTERCONNECTED AND INSTALLED IN ACCORDANCE WITH NFPA 101, 2018 EDITION, SECTION 30.3.4.5.

H. ALL FIRE ALARM NOTIFICATION APPLIANCES LOCATED IN SLEEPING AREAS SHALL BE OF A LOW FREQUENCY SIGNAL TYPE IN ACCORDANCE WITH NFPA 72, 2016 EDITION, SECTION 18.4.5.3.

REFERENCE NOTES: (X)

(1) CONNECT MECHANICAL UNIT VIA INTEGRAL DISCONNECT PROVIDED WITH UNIT. COORDINATE EXACT REQUIREMENTS WITH MECHANICAL CONTRACTOR PRIOR TO ROUGH-IN.

(2) PROVIDE CIRCUIT BREAKER FEEDING WATER HEATER WITH "LOCK OUT" STYLE BREAKER HANDLE PER NEC 422.31.

(3) PROVIDE 120V OUTLET FOR MICROWAVE/HOOD CONNECTION. INSTALL OUTLET AT 78"AFF INSIDE THE CABINET. COORDINATE LOCATION WITH MILLWORK INSTALLER PRIOR TO ROUGH-IN.

(4) REFER TO POWER RISER DIAGRAM AND UNIT PANEL SCHEDULES FOR ADDITIONAL INFORMATION.

(5) PROVIDE ELECTRICAL CONNECTION TO UNIT'S ASSOCIATED CONDENSING UNIT. COORDINATE LOCATION WITH MECHANICAL CONTRACTOR PRIOR TO ROUGH-IN. COORDINATE ROUTING OF CONDUIT THROUGH BUILDING WITH GENERAL CONTRACTOR PRIOR TO ROUGH-IN. INCREASE WIRE SIZE AS REQUIRED FOR CIRCUIT LENGTH PER FBC AND NEC.

(6) PROVIDE COMBINATION 120V TAMPER RESISTANT RECEPTACLE AND USB CHARGER OUTLET (LEVITON #T5632-W OR APPROVED SUBSTITUTION). COLOR AS SELECTED BY OWNER. PROVIDE JUNCTION BOX SIZED AS REQUIRED BY NEC AND MANUFACTURER FOR DEVICE. COORDINATE OUTLET LOCATION WITH OWNER PRIOR TO ROUGH-IN.

(7) 12"x18"x3" DEEP FLUSH MOUNTED CABINET WITH DOOR FOR TELEPHONE AND TV CABLE TERMINATIONS. "NTC" CABINET. COORDINATE MOUNTING HEIGHT AND EXACT LOCATION WITH ALL TRADES PRIOR TO ROUGH-IN. CONTRACTOR TO PULL AND LABEL ALL LINES IN STAR CONFIGURATION.

(8) PROVIDE 120V CONNECTION FOR DISHWASHER. COORDINATE CONNECTION REQUIREMENTS AND LOCATION WITH EQUIPMENT INSTALLER PRIOR TO ROUGH-IN.

(9) PROVIDE 120V CONNECTION FOR GARBAGE DISPOSAL. COORDINATE CONNECTION REQUIREMENTS AND LOCATION WITH EQUIPMENT INSTALLER PRIOR TO ROUGH-IN.

(10) PROVIDE 120V OUTLET FOR REFRIGERATOR, 48"AFF.

(11) PROVIDE 250V/40A/1ø OUTLET FOR RANGE. COORDINATE PLUG CONFIGURATION AND LOCATION WITH EQUIPMENT INSTALLER PRIOR TO ROUGH-IN.

(12) PROVIDE 250V/30A/1ø OUTLET FOR DRYER. COORDINATE PLUG CONFIGURATION AND LOCATION WITH EQUIPMENT INSTALLER PRIOR TO ROUGH-IN.

(13) PROVIDE 120V OUTLET FOR WASHER, 36"AFF.

(14) IN ISLAND LOCATIONS, LOCATE 120V RECEPTACLE IN LOW WALL BELOW COUNTER WITHIN 12" OF COUNTERTOP AS REQUIRED BY NEC 210.52(5). COORDINATE LOCATION WITH AHJ PRIOR TO ROUGH-IN.

(15) PROVIDE 120V WALL MOUNTED JUNCTION BOX FOR UNDER CABINET LIGHTING. COORDINATE EXACT LOCATION AND CONNECTION REQUIREMENTS WITH OWNER AND EQUIPMENT SUPPLIER PRIOR TO ROUGH-IN.

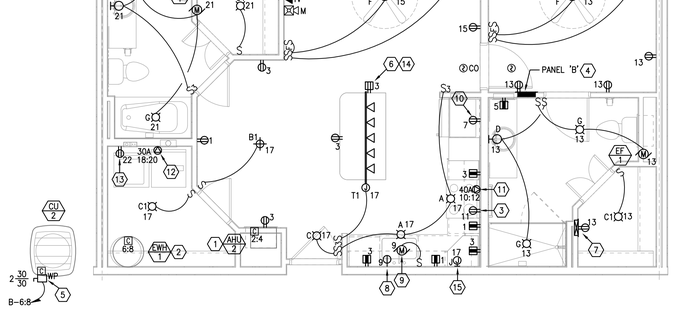

G5 UNIT 2Bs - ELECTRICAL
1/4" = 1'-0"

U.S. DEPARTMENT OF HOUSING AND URBAN DEVELOPMENT

ISSUE HISTORY

No.	Date	Description
1	04/15/22	Permit Submission

REVISION HISTORY

No.	Date	Description

FUGLEBERG KOCH
2555 Temple Trail, Winter Park, FL 32789 (407) 629-0595
www. fuglebergkoch.com AA26002103

CONSULTANT

Joseph, Lawrence & Co
Consulting Engineers
1180 HARWOOD AVE. SUITE 3000
ALTAMONTE SPRINGS, FLORIDA 32714
TEL: 321.972.4466
WWW.JLCENG.COM
CA NO. 4050 - E

JLC 22.0023.00

ALABAMA LICENSED PROFESSIONAL ENGINEER BRANDI L. SUMMERLIN No. 31172

Drawn:	MJR/SMB
Checked:	BLS/AJB
Approval:	BLS/AJB
Date:	04/15/2022
Project #:	5722

THE MADISON
HUNTSVILLE, AL

ENLARGED UNIT PLANS ELECTRICAL

E3.05

© 2019 These documents and their contents are the property of FUGLEBERG KOCH - ARCHITECTS, and are based upon the specific project for which they were prepared. Any reproductions, revisions, or modifications of these documents without the expressed written consent of Fugleberg Koch is prohibited by law.

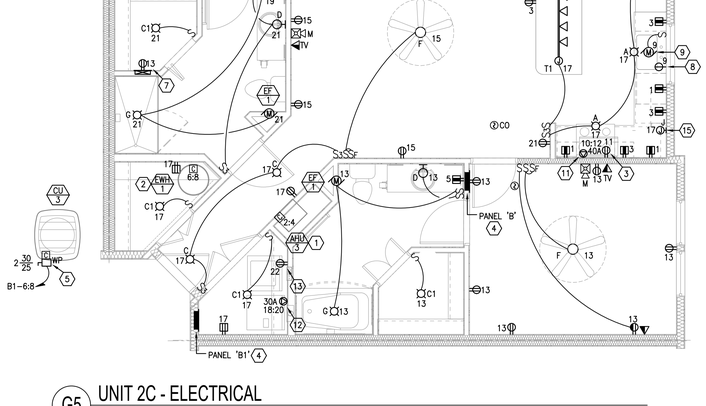

G5 UNIT 2C - ELECTRICAL
1/4" = 1'-0"

GENERAL NOTES:

A. DO NOT SCALE ELECTRICAL DRAWINGS FOR ANY DIMENSIONS.

B. ALL WORK SHALL COMPLY WITH THE 2017 NATIONAL ELECTRICAL CODE, NATIONAL, STATE AND LOCAL CODES. PROVIDE GROUNDING AND BONDING PER NEC 250.

C. SEE SINGLE LINE DIAGRAM FOR FEEDER WIRE AND CONDUIT SIZE. ALL CIRCUITS NOT SIZED ON DRAWING SHALL BE INSTALLED TO MEET MINIMUM SIZE REQUIRED BY NEC. ALL CONDUCTORS SHALL HAVE AN EQUIPMENT GROUND WIRE SIZED PER NEC.

D. WHERE AVAILABLE THE ELECTRICAL CONTRACTOR SHALL COORDINATE THE EXACT LOCATION OF ALL DEVICES PER THE DIMENSIONED ARCHITECTURAL DRAWINGS (KITCHENS, BATHROOMS, ETC.), ELEVATIONS AND DETAILS PRIOR TO ROUGH-IN. THE ELECTRICAL CONTRACTOR SHALL COORDINATE WITH THE GENERAL CONTRACTOR AND FRAMING CONTRACTOR TO PROVIDE ALL ADDITIONAL FRAMING AND BLOCKING WHERE DEVICES ARE REQUIRED TO BE IN A SPECIFIC LOCATION PER FAIR HOUSING REQUIREMENTS, ADA OR LOCAL AUTHORITY HAVING JURISDICTION.

E. ALL 120V, SINGLE PHASE, 15A AND 20A BRANCH CIRCUITS SUPPLYING OUTLETS OR DEVICES INSTALLED IN DWELLING UNIT KITCHENS, FAMILY ROOMS, DINING ROOMS, LIVING ROOMS, PARLORS, LIBRARIES, DENS, BEDROOMS, SUNROOMS, RECREATION ROOMS, CLOSETS, HALLWAYS, LAUNDRY AREAS, OR SIMILAR ROOMS OR AREAS SHALL BE PROTECTED BY A LISTED ARC-FAULT CIRCUIT INTERRUPTER INSTALLED TO PROVIDE PROTECTION OF THE BRANCH CIRCUIT AS REQUIRED BY NEC 210.12 AND LOCAL ORDINANCES.

F. ALL 125V, 15A AND 20A RECEPTACLES INSTALLED IN DWELLING UNITS SHALL BE LISTED TAMPER-RESISTANT AS REQUIRED BY NEC 406.12.

G. ALL SMOKE ALARMS IN DWELLING UNITS SHALL BE INTERCONNECTED AND INSTALLED IN ACCORDANCE WITH NFPA 101, 2018 EDITION, SECTION 30.3.4.5.

H. ALL FIRE ALARM NOTIFICATION APPLIANCES LOCATED IN SLEEPING AREAS SHALL BE OF A LOW FREQUENCY SIGNAL TYPE IN ACCORDANCE WITH NFPA 72, 2016 EDITION, SECTION 18.4.5.3.

REFERENCE NOTES: ⟨X⟩

1. CONNECT MECHANICAL UNIT VIA INTEGRAL DISCONNECT PROVIDED WITH UNIT. COORDINATE EXACT REQUIREMENTS WITH MECHANICAL CONTRACTOR PRIOR TO ROUGH-IN.
2. PROVIDE CIRCUIT BREAKER FEEDING WATER HEATER WITH "LOCK OUT" STYLE BREAKER HANDLE PER NEC 422.31.
3. PROVIDE 120V OUTLET FOR MICROWAVE/HOOD CONNECTION. INSTALL OUTLET AT 78"AFF INSIDE THE CABINET. COORDINATE LOCATION WITH MILLWORK INSTALLER PRIOR TO ROUGH-IN.
4. REFER TO POWER RISER DIAGRAM AND UNIT PANEL SCHEDULES FOR ADDITIONAL INFORMATION.
5. PROVIDE ELECTRICAL CONNECTION TO UNIT'S ASSOCIATED CONDENSING UNIT. COORDINATE LOCATION WITH MECHANICAL CONTRACTOR PRIOR TO ROUGH-IN. COORDINATE ROUTING OF CONDUIT THROUGH BUILDING WITH GENERAL CONTRACTOR PRIOR TO ROUGH-IN. INCREASE WIRE SIZE AS REQUIRED FOR CIRCUIT LENGTH PER FBC AND NEC.
6. PROVIDE COMBINATION 120V TAMPER RESISTANT RECEPTACLE AND USB CHARGER OUTLET (LEVITON #T5632-W OR APPROVED SUBSTITUTION). COLOR AS SELECTED BY OWNER. PROVIDE JUNCTION BOX SIZED AS REQUIRED BY NEC AND MANUFACTURER FOR DEVICE. COORDINATE OUTLET LOCATION WITH OWNER PRIOR TO ROUGH-IN.
7. 12"x18"x3" DEEP FLUSH MOUNTED CABINET WITH DOOR FOR TELEPHONE AND TV CABLE TERMINATIONS. "NTC" CABINET. COORDINATE MOUNTING HEIGHT AND EXACT LOCATION WITH ALL TRADES PRIOR TO ROUGH-IN. CONTRACTOR TO PULL AND LABEL ALL LINES IN STAR CONFIGURATION.
8. PROVIDE 120V CONNECTION FOR DISHWASHER. COORDINATE CONNECTION REQUIREMENTS AND LOCATION WITH EQUIPMENT INSTALLER PRIOR TO ROUGH-IN.
9. PROVIDE 120V CONNECTION FOR GARBAGE DISPOSAL. COORDINATE CONNECTION REQUIREMENTS AND LOCATION WITH EQUIPMENT INSTALLER PRIOR TO ROUGH-IN.
10. PROVIDE 120V OUTLET FOR REFRIGERATOR, 48"AFF.
11. PROVIDE 250V/40A/1ø OUTLET FOR RANGE. COORDINATE PLUG CONFIGURATION AND LOCATION WITH EQUIPMENT INSTALLER PRIOR TO ROUGH-IN.
12. PROVIDE 250V/30A/1ø OUTLET FOR DRYER. COORDINATE PLUG CONFIGURATION AND LOCATION WITH EQUIPMENT INSTALLER PRIOR TO ROUGH-IN.
13. PROVIDE 120V OUTLET FOR WASHER, 36"AFF.
14. IN ISLAND LOCATIONS, LOCATE 120V RECEPTACLE IN LOW WALL BELOW COUNTER WITHIN 12" OF COUNTERTOP AS REQUIRED BY NEC 210.52(5). COORDINATE LOCATION WITH AHJ PRIOR TO ROUGH-IN.
15. PROVIDE 120V WALL MOUNTED JUNCTION BOX FOR UNDER CABINET LIGHTING. COORDINATE EXACT LOCATION AND CONNECTION REQUIREMENTS WITH OWNER AND EQUIPMENT SUPPLIER PRIOR TO ROUGH-IN.

U.S. DEPARTMENT OF HOUSING AND URBAN DEVELOPMENT

ISSUE HISTORY

No.	Date	Description
1	04/15/22	Permit Submission

REVISION HISTORY

No.	Date	Description

© 2015 These documents and their contents are the property of FUGLEBERG KOCH - AA26002103, and are not to be used for any purpose other than the specific project noted on these drawings. Any reproductions, revisions, or modifications of these documents without the expressed written consent of Fugleberg Koch is prohibited by law.

FUGLEBERG KOCH
2555 Temple Trail, Winter Park, FL 32789 (407) 629-0595
www. fuglebergkoch.com AA26002103

CONSULTANT
Joseph, Lawrence & Co
Consulting Engineers
1180 HARWOOD AVE. SUITE 3000
ALTAMONTE SPRINGS, FLORIDA 32714
TEL: 321.972.4466
WWW.JLCENG.COM
CA NO. 4050 - E

JLC 22.0023.00

ALABAMA LICENSED No. 31420 PROFESSIONAL ENGINEER BLAKE L. SUDDUTH

Drawn:	MJR/SMB
Checked:	BLS/AJB
Approval:	BLS/AJB
Date:	04/15/2022
Project #:	5722

THE MADISON
HUNTSVILLE, AL

ENLARGED UNIT PLANS ELECTRICAL

E3.06

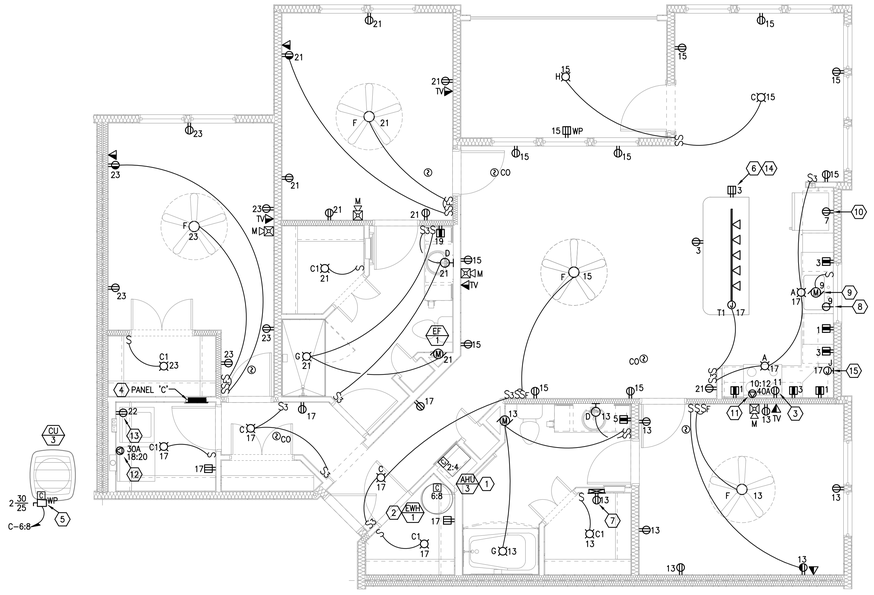

G5 UNIT 3C - ELECTRICAL
1/4" = 1'-0"

GENERAL NOTES:

A. DO NOT SCALE ELECTRICAL DRAWINGS FOR ANY DIMENSIONS.

B. ALL WORK SHALL COMPLY WITH THE 2017 NATIONAL ELECTRICAL CODE, NATIONAL, STATE AND LOCAL CODES. PROVIDE GROUNDING AND BONDING PER NEC 250.

C. SEE SINGLE LINE DIAGRAM FOR FEEDER WIRE AND CONDUIT SIZE. ALL CIRCUITS NOT SIZED ON DRAWING SHALL BE INSTALLED TO MEET MINIMUM SIZE REQUIRED BY NEC. ALL CONDUCTORS SHALL HAVE AN EQUIPMENT GROUND WIRE SIZED PER NEC.

D. WHERE AVAILABLE THE ELECTRICAL CONTRACTOR SHALL COORDINATE THE EXACT LOCATION OF ALL DEVICES PER THE DIMENSIONED ARCHITECTURAL DRAWINGS (KITCHENS, BATHROOMS, ETC.), ELEVATIONS AND DETAILS PRIOR TO ROUGH-IN. THE ELECTRICAL CONTRACTOR SHALL COORDINATE WITH THE GENERAL CONTRACTOR AND FRAMING CONTRACTOR TO PROVIDE ALL ADDITIONAL FRAMING AND BLOCKING WHERE DEVICES ARE REQUIRED TO BE IN A SPECIFIC LOCATION PER FAIR HOUSING REQUIREMENTS, ADA OR LOCAL AUTHORITY HAVING JURISDICTION.

E. ALL 120V, SINGLE PHASE, 15A AND 20A BRANCH CIRCUITS SUPPLYING OUTLETS OR DEVICES INSTALLED IN DWELLING UNIT KITCHENS, FAMILY ROOMS, DINING ROOMS, LIVING ROOMS, PARLORS, LIBRARIES, DENS, BEDROOMS, SUNROOMS, RECREATION ROOMS, CLOSETS, HALLWAYS, LAUNDRY AREAS, OR SIMILAR ROOMS OR AREAS SHALL BE PROTECTED BY A LISTED ARC-FAULT CIRCUIT INTERRUPTER INSTALLED TO PROVIDE PROTECTION OF THE BRANCH CIRCUIT AS REQUIRED BY NEC 210.12 AND LOCAL ORDINANCES.

F. ALL 125V, 15A AND 20A RECEPTACLES INSTALLED IN DWELLING UNITS SHALL BE LISTED TAMPER-RESISTANT AS REQUIRED BY NEC 406.12.

G. ALL SMOKE ALARMS IN DWELLING UNITS SHALL BE INTERCONNECTED AND INSTALLED IN ACCORDANCE WITH NFPA 101, 2018 EDITION, SECTION 30.3.4.5.

H. ALL FIRE ALARM NOTIFICATION APPLIANCES LOCATED IN SLEEPING AREAS SHALL BE OF A LOW FREQUENCY SIGNAL TYPE IN ACCORDANCE WITH NFPA 72, 2016 EDITION, SECTION 18.4.5.3.

REFERENCE NOTES: (X)

(1) CONNECT MECHANICAL UNIT VIA INTEGRAL DISCONNECT PROVIDED WITH UNIT. COORDINATE EXACT REQUIREMENTS WITH MECHANICAL CONTRACTOR PRIOR TO ROUGH-IN.

(2) PROVIDE CIRCUIT BREAKER FEEDING WATER HEATER WITH "LOCK OUT" STYLE BREAKER HANDLE PER NEC 422.31.

(3) PROVIDE 120V OUTLET FOR MICROWAVE/HOOD CONNECTION. INSTALL OUTLET AT 78"AFF INSIDE THE CABINET. COORDINATE LOCATION WITH MILLWORK INSTALLER PRIOR TO ROUGH-IN.

(4) REFER TO POWER RISER DIAGRAM AND UNIT PANEL SCHEDULES FOR ADDITIONAL INFORMATION.

(5) PROVIDE ELECTRICAL CONNECTION TO UNIT'S ASSOCIATED CONDENSING UNIT. COORDINATE LOCATION WITH MECHANICAL CONTRACTOR PRIOR TO ROUGH-IN. COORDINATE ROUTING OF CONDUIT THROUGH BUILDING WITH GENERAL CONTRACTOR PRIOR TO ROUGH-IN. INCREASE WIRE SIZE AS REQUIRED FOR CIRCUIT LENGTH PER FBC AND NEC.

(6) PROVIDE COMBINATION 120V TAMPER RESISTANT RECEPTACLE AND USB CHARGER OUTLET (LEVITON #T5632-W OR APPROVED SUBSTITUTION). COLOR AS SELECTED BY OWNER. PROVIDE JUNCTION BOX SIZED AS REQUIRED BY NEC AND MANUFACTURER FOR DEVICE. COORDINATE OUTLET LOCATION WITH OWNER PRIOR TO ROUGH-IN.

(7) 12"x18"x3" DEEP FLUSH MOUNTED CABINET WITH DOOR FOR TELEPHONE AND TV CABLE TERMINATIONS. "NTC" CABINET. COORDINATE MOUNTING HEIGHT AND EXACT LOCATION WITH ALL TRADES PRIOR TO ROUGH-IN. CONTRACTOR TO PULL AND LABEL ALL LINES IN STAR CONFIGURATION.

(8) PROVIDE 120V CONNECTION FOR DISHWASHER. COORDINATE CONNECTION REQUIREMENTS AND LOCATION WITH EQUIPMENT INSTALLER PRIOR TO ROUGH-IN.

(9) PROVIDE 120V CONNECTION FOR GARBAGE DISPOSAL. COORDINATE CONNECTION REQUIREMENTS AND LOCATION WITH EQUIPMENT INSTALLER PRIOR TO ROUGH-IN.

(10) PROVIDE 120V OUTLET FOR REFRIGERATOR, 48"AFF.

(11) PROVIDE 250V/40A/1ø OUTLET FOR RANGE. COORDINATE PLUG CONFIGURATION AND LOCATION WITH EQUIPMENT INSTALLER PRIOR TO ROUGH-IN.

(12) PROVIDE 250V/30A/1ø OUTLET FOR DRYER. COORDINATE PLUG CONFIGURATION AND LOCATION WITH EQUIPMENT INSTALLER PRIOR TO ROUGH-IN.

(13) PROVIDE 120V OUTLET FOR WASHER, 36"AFF.

(14) IN ISLAND LOCATIONS, LOCATE 120V RECEPTACLE IN LOW WALL BELOW COUNTER WITHIN 12" OF COUNTERTOP AS REQUIRED BY NEC 210.52(5). COORDINATE LOCATION WITH AHJ PRIOR TO ROUGH-IN.

(15) PROVIDE 120V WALL MOUNTED JUNCTION BOX FOR UNDER CABINET LIGHTING. COORDINATE EXACT LOCATION AND CONNECTION REQUIREMENTS WITH OWNER AND EQUIPMENT SUPPLIER PRIOR TO ROUGH-IN.

U.S. DEPARTMENT OF HOUSING AND URBAN DEVELOPMENT

ISSUE HISTORY

No.	Date	Description
1	04/15/22	Permit Submission

REVISION HISTORY

No.	Date	Description

© 2011 These documents and their contents are the property of FUGLEBERG KOCH - MADISON 1103, and are loaned for the specific project named. Any reproductions, versions, or modifications of these documents without the expressed written consent of Fugleberg Koch is prohibited by law.

FUGLEBERG KOCH
2555 Temple Trail, Winter Park, FL 32789 (407) 629-0595
www. fuglebergkoch.com AA26002103

CONSULTANT
Joseph, Lawrence & Co
Consulting Engineers
1150 HARWOOD AVE. SUITE 3000
ALTAMONTE SPRINGS, FLORIDA 32714
TEL: 321.972.4466
WWW.JLCENG.COM
CA NO. 4050 - E

JLC 22.0023.00

STATE OF ALABAMA LICENSED PROFESSIONAL ENGINEER No. 31122 BRYAN L. SUDDUTH

Drawn:	MJR/SMB
Checked:	BLS/AJB
Approved:	BLS/AJB
Date:	04/15/2022
Project #	5722

THE MADISON
HUNTSVILLE, AL

ENLARGED UNIT PLANS
ELECTRICAL

E3.07

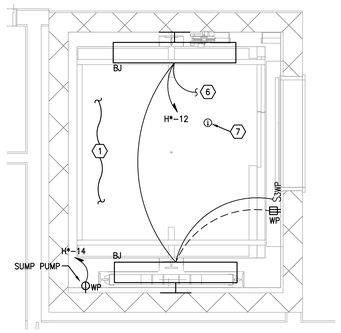

C3 ENLARGED ELEVATOR PLAN - 1ST FLOOR - BLDG A & B
1/2" = 1'-0"

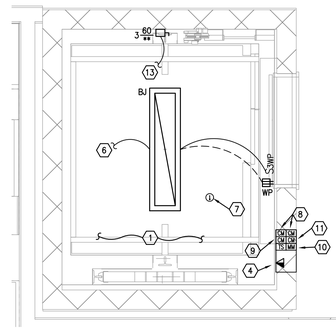

C7 ENLARGED ELEVATOR PLAN - 4TH FLOOR - BLDG A & B
1/2" = 1'-0"

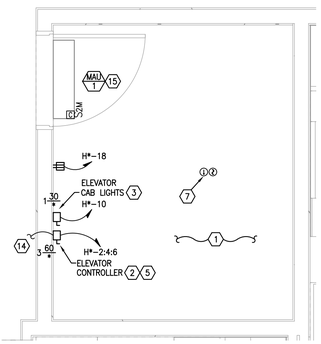

F7 ENLARGED ELEVATOR PLAN - EQUIPMENT ROOM - BLDG A & B
1/2" = 1'-0"

GENERAL NOTES:

A. DO NOT SCALE ELECTRICAL DRAWING FOR ANY DIMENSIONS.

B. ALL WORK SHALL COMPLY WITH THE 2017 NATIONAL ELECTRICAL CODE, NATIONAL, STATE AND LOCAL CODES. PROVIDE GROUNDING AND BONDING PER NEC 250.

C. SEE SINGLE LINE DIAGRAM FOR FEEDER WIRE AND CONDUIT SIZE. ALL CIRCUITS NOT SIZED ON DRAWING SHALL BE INSTALLED TO MEET MINIMUM SIZE REQUIRED BY NEC. ALL CONDUCTORS SHALL HAVE AN EQUIPMENT GROUND WIRE SIZED PER NEC.

D. FIELD VERIFY EXACT LOCATION OF ALL DEVICES AND EQUIPMENT PRIOR TO ROUGH IN.

REFERENCE NOTES: (X)

(1) REFER TO ELEVATOR SHOP DRAWINGS FOR EXACT LOCATIONS OF ELECTRICAL WORK IN ELEVATOR PIT AND MACHINE ROOM. PROVIDE CONNECTION SWITCHES, LIGHTS AND RECEPTACLES AS PER NEC 620.23 AND 24. CONNECT FIRE ALARM AND TELEPHONE DEVICES IN ELEVATOR SHAFT LOBBY AND EQUIPMENT ROOM PER STATE FIRE MARSHALL REQUIREMENTS.

(2) PROVIDE LOCKABLE RK5 DISCONNECT SWITCH WITH 20A AUXILIARY CONTACTS, REJECTION CLIPS AND RK5 FUSES AS REQUIRED BY ELEVATOR INSTALLER. CONNECT ELEVATOR CONTROLLER. REFER TO PANEL SCHEDULES FOR ADDITIONAL INFORMATION.

(3) 30A, 120V LOCKABLE DISCONNECT SWITCH WITH REJECTION CLIPS AND 20A RK5 FUSE. LABEL "ELEVATOR CAB LIGHTS". CONNECT ELEVATOR CONTROLLERS: (2)#12 AND (1)#12 GND. IN 1/2"C.

(4) ELEVATOR CAB TELEPHONE. COORDINATE WITH ELEVATOR CONTRACTOR PRIOR TO ROUGH-IN.

(5) COORDINATE DISCONNECT SIZE, BREAKER SIZE, AND CONDUIT/CONDUCTOR SIZING WITH APPROVED ELEVATOR SHOP DRAWINGS AND PROVIDE AS REQUIRED.

(6) CONNECT ELEVATOR SHAFT LIGHTING ON TOP FLOOR TO ELEVATOR PIT LIGHTING ON FIRST FLOOR. FIXTURES TO BE CONTROLLED BY 3-WAY SWITCH AS SHOWN ON PLANS.

(7) MOUNT MOISTURE PROOF HEAT DETECTOR WITHIN 18" OF FIRE PROTECTION SPRINKLER HEAD. FIELD COORDINATE PRIOR TO ROUGH-IN.

(8) ELEVATOR RECALL CONTROL MODULES. COORDINATE WITH ELEVATOR CONTRACTOR PRIOR TO ROUGH-IN.

(9) ELEVATOR POWER SHUTDOWN CONTROL MODULE.

(10) ELEVATOR POWER SHUTDOWN CONTROL CIRCUIT SUPERVISORY MONITOR MODULE.

(11) ELEVATOR PHASE 1 EMERGENCY RECALL VISUAL SIGNAL CONTROL MODULE. COORDINATE TERMINATION REQUIREMENTS WITH ELEVATOR CONTROLLER.

(12) PROVIDE TWO-WAY COMMUNICATION SYSTEM AND CABLING TO MAIN BASE STATION AS REQUIRED BY 2020 7TH EDITION FBC, 2018 FFPC, AND 2018 NFPA 101 LIFE SAFETY CODE. COORDINATE LOCATION WITH OWNER AND AUTHORITY HAVING JURISDICTION PRIOR TO ROUGH-IN.

(13) PROVIDE 60A/3P, NON-FUSED DISCONNECT SWITCH AT TOP OF ELEVATOR SHAFT FOR CONNECTION OF ELEVATOR MOTOR TO ELEVATOR CONTROLLER. COORDINATE LOCATION AND CONNECTION REQUIREMENTS WITH ELEVATOR MANUFACTURER SHOP DRAWINGS AND INSTALLER PRIOR TO ROUGH-IN. MAINTAIN ALL NEC REQUIRED CLEARANCES FOR DISCONNECT SWITCH.

(14) TO NON-FUSED 60A/3P DISCONNECT LOCATED AT TOP OF ELEVATOR SHAFT. PROVIDE (3)#6 AWG CU. AND (1)#10 AWG CU. GND. IN 1"C. AS REQUIRED.

(15) CONNECT INTERIOR MECHANICAL MINI-SPLIT UNIT MAU-1 THROUGH EXTERIOR UNIT MCU-1. CONNECT PER MANUFACTURER'S RECOMMENDATIONS, AND PROVIDE ALL CONTROL WIRING, CONDUIT, ETC. AS REQUIRED.

U.S. DEPARTMENT OF HOUSING AND URBAN DEVELOPMENT

ISSUE HISTORY

No.	Date	Description
1	04/15/22	Permit Submission

REVISION HISTORY

No.	Date	Description

FUGLEBERG KOCH
2555 Temple Trail, Winter Park, FL 32789 (407) 629-0595
www. fuglebergkoch.com AA26002103

CONSULTANT
Joseph, Lawrence & Co
Consulting Engineers
1180 HARWOOD AVE. SUITE 3000
ALTAMONTE SPRINGS, FLORIDA 32714
TEL: 321.972.4466
WWW.JLCENG.COM
CA NO. 4050 - E

JLC 22.0023.00

A.B.A. ARCHITECT LICENSE NO. 31122 PROFESSIONAL ENGINEER BLAKE L. SUDDUTH

Drawn:	MJR/SMB
Checked:	BLS/AJB
Approved:	BLS/AJB
Date:	04/15/2022
Project #	5722

THE MADISON
HUNTSVILLE, AL

ENLARGED ELEVATOR PLANS ELECTRICAL

E3.09

© 2015 These documents and their contents are the property of FUGLEBERG KOCH | AA26002103, and are based only for the specific project indicated on these drawings. Any reproductions, revisions, or modifications of these documents without the expressed written consent of Fugleberg Koch is prohibited by law.

UNIT FEEDER SCHEDULE

208V/1ø RESIDENTIAL LOAD CENTERS		
UNIT LOAD CENTER	MAXIMUM DISTANCE (FEET)	MINIMUM FEEDER SIZE (ALUMINUM SER CABLE)
125A	125	(3)#1/0 AWG AL & (1)#2 AWG AL GRD
	156	(3)#2/0 AWG AL & (1)#1 AWG AL GRD
	192	(3)#3/0 AWG AL & (1)#1/0 AWG AL GRD
	250	(3)#4/0 AWG AL & (1)#2/0 AWG AL GRD

NOTES:
1. FEEDER SIZES BASED ON NEC TABLE 310.15(B)(16) 75°C COLUMN.
2. FEEDER SIZES BASED ON 3% VOLTAGE DROP.
3. BASIS OF DESIGN: SOUTHWIRE SERVICE ENTRANCE CABLE – TYPE SER THREE CONDUCTOR WITH BARE GROUND.

CONDUIT & CONDUCTOR SIZES: (X)

(A) 5 SETS [(4)#600 kcmil AL., 4"C.]

(B) 2 SETS [(4)#250 kcmil AL. & (1)#1 AWG. AL. GND. IN 3"C.]

NOTE:
FEEDERS ARE DESIGNED FOR A MAXIMUM VOLTAGE DROP OF 2% AT DESIGN LOAD.
BRANCH CIRCUITS ARE DESIGNED FOR A MAXIMUM VOLTAGE DROP OF 3% AT DESIGN LOAD.

REFERENCE NOTES: (X)

1. REFER TO CIVIL DRAWINGS FOR LOCATION OF UTILITY TRANSFORMER.
2. COORDINATE ALL REQUIREMENTS WITH LOCAL UTILITY COMPANY PRIOR TO ROUGH-IN AND PROVIDE AS REQUIRED.
3. COORDINATE ROUTING OF SERVICE ENTRANCE RATED CABLE WITH GENERAL CONTRACTOR AND ARCHITECT PRIOR TO ROUGH-IN.
4. COORDINATE LOCATION WITH CIVIL DRAWINGS, OWNER AND UTILITY COMPANY PRIOR TO ROUGH-IN. PROVIDE METER LABELING AS REQUIRED BY UTILITY COMPANY.
5. PROVIDE HARD WIRED SURGE PROTECTIVE DEVICE OF SAME MANUFACTURER AS PANEL/METER CENTER.
6. PROVIDE IDENTIFICATION SIGNAGE ON MAIN DISCONNECTS TO CONFORM WITH NEC 230.2(E) AND LOCAL UTILITY COMPANY.
7. COORDINATE EXACT LOCATION OF BUILDING SHUNT TRIP WITH FIRE MARSHALL PRIOR TO ROUGH-IN. SHUNT TRIP TO SHUT OFF ELECTRICAL SERVICE TO MC#8.
8. PROVIDE #6 AWG CU. GND. INTER-SYSTEM BONDING JUMPER TO INTER-SYSTEM BONDING TERMINAL PER NEC 250.94.

GENERAL NOTES:

A. DO NOT SCALE ELECTRICAL DRAWING FOR ANY DIMENSIONS.

B. ALL WORK SHALL COMPLY WITH THE 2017 NATIONAL ELECTRIC CODE, NATIONAL, STATE AND LOCAL CODES. PROVIDE GROUNDING AND BONDING PER NEC 250

C. COORDINATE ALL WORK WITH LOCAL UTILITY COMPANY.

D. CONTRACTOR TO PROVIDE AND INSTALL ARC ENERGY REDUCTION MITIGATION SYSTEM AND DOCUMENTATION FOR ALL OVERCURRENT DEVICES RATED 1200A OR GREATER PER NEC 240.87.

E. PER NEC ARTICLE 110.24, ALL CONSTRUCTION DOCUMENTS SHALL PROVIDE A PERMANENT LABEL TO THE FRONT OF SERVICE EQUIPMENT ENCLOSURE STATING THE MAXIMUM AVAILABLE FAULT CURRENT IN AMPS, THE DATE CALCULATED, THE NOMINAL VOLTAGE AND THE FREQUENCY IN HERTZ, THE SERVICE EQUIPMENT BUS RATING IN AMPS, AND THE SCCR OF SERVICE EQUIPMENT IN AMPS. SIGNAGE SHALL BE ENGRAVED, LAMINATED ACRYLIC, OR MELAMINE LABEL, PUNCHED OR DRILLED FOR MECHANICAL FASTENERS WITH WHITE LETTERS ON A BLACK BACKGROUND, MINIMUM 1/16" THICK. MINIMUM LETTER HEIGHT SHALL BE 1/2".

F. PER NEC ARTICLE 110.16, ARC FLASH WARNING LABELS ARE TO BE INSTALLED ON ALL SWITCHBOARDS, PANELBOARDS, METER SOCKET ENCLOSURES, AND MOTOR CONTROL CENTERS THAT ARE LIKELY TO REQUIRE EXAMINATION, ADJUSTMENT, SERVICING, OR MAINTENANCE WHILE ENERGIZED. ARC FLASH WARNING LABELS SHALL MEET THE ARTICLE 110.21(B).

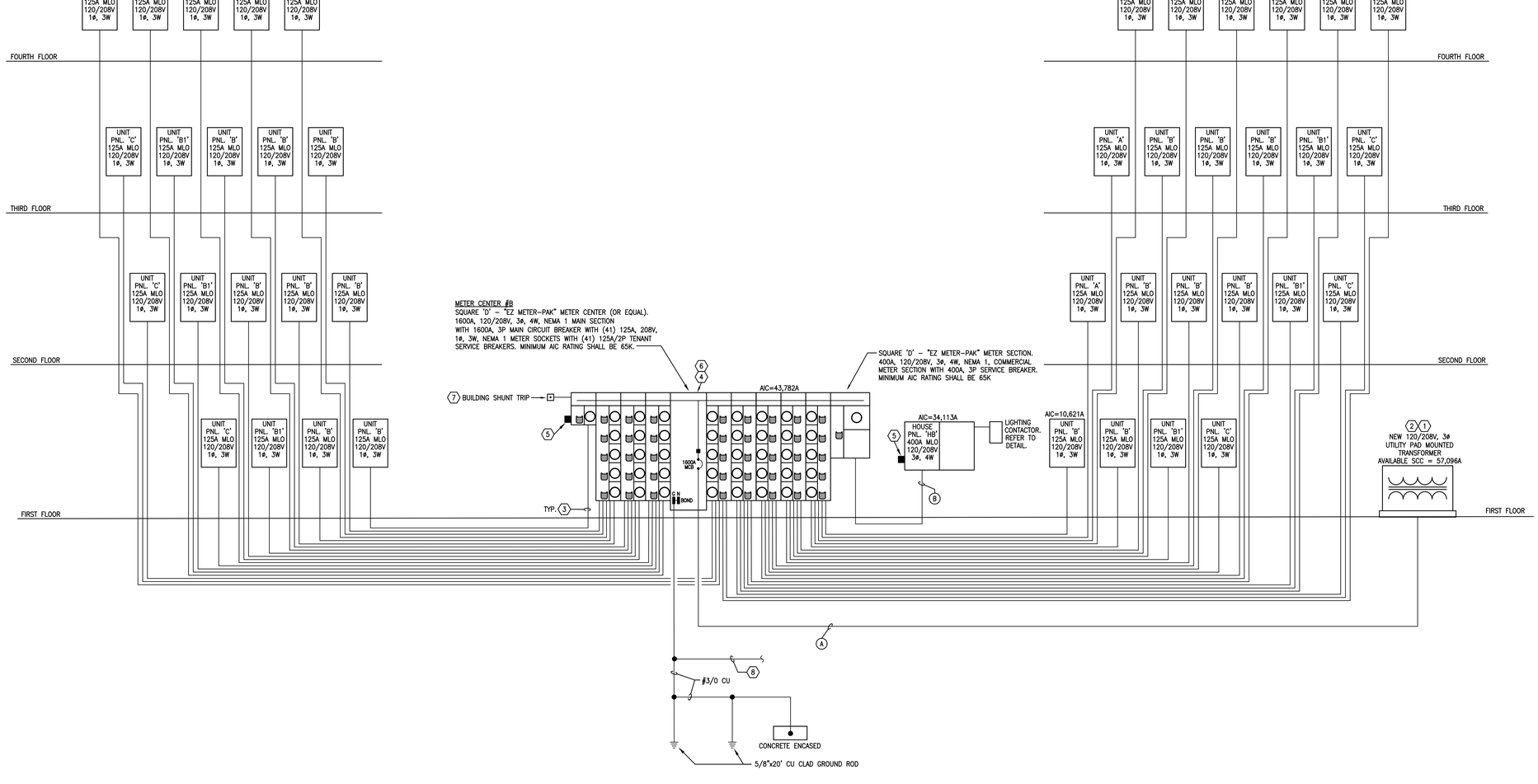

K3 BUILDING TYPE B - POWER RISER DIAGRAM - METER CENTER #B
NOT TO SCALE

U.S. DEPARTMENT OF HOUSING AND URBAN DEVELOPMENT

ISSUE HISTORY

No.	Date	Description
1	04/15/22	Permit Submission

REVISION HISTORY

No.	Date	Description

FUGLEBERG KOCH
2555 Temple Trail, Winter Park, FL 32789 (407) 629-0595
www. fuglebergkoch.com AA26002103

CONSULTANT
Joseph, Lawrence & Co
Consulting Engineers
1180 HARWOOD AVE. SUITE 3000
ALTAMONTE SPRINGS, FLORIDA 32714
TEL: 321.972.4466
WWW.JLCENG.COM
CA NO. 4050 - E

JLC 22.0023.00

ALABAMA LICENSED PROFESSIONAL ENGINEER No. 31122 BLAKE L. SUDDUTH

Drawn:	MJR/SMB
Checked:	BLS/AJB
Approved:	BLS/AJB
Date:	04/15/2022
Project #	5722

THE MADISON
HUNTSVILLE, AL

RISER DIAGRAM ELECTRICAL

E4.02

© 2015 These documents and their contents are the property of FUGLEBERG KOCH - AA26002103, and are issued only for the specific project shown in these drawings. Any reproductions, reuses, or modifications of these documents without the expressed written consent of Fugleberg Koch is prohibited by law.

RESIDENTIAL UNIT TYPE 1A, 1B, 1Bs ELECTRICAL SERVICE LOAD SUMMARY

837 SQUARE FT. x 3 VA =	2,511 VA	(GENERAL LIGHTING/RECEPTACLE LOAD)
1,500 VA x 2 =	3,000 VA	(SMALL APPLIANCE LOAD)
1,500 VA x 1 =	1,500 VA	(WASHING MACHNE)
5,000 VA x 1 =	5,000 VA	(ELECTRIC DRYER)
4,500 VA x 1 =	4,500 VA	(ELECTRIC WATER HEATER)
1,200 VA x 1 =	1,200 VA	(DISHWASHER)
800 VA x 1 =	800 VA	(DISPOSAL)
840 VA x 1 =	840 VA	(REFRIGERATOR)
1,200 VA x 1 =	1,200 VA	(MICROVAVE/HOOD)
10,000 VA x 1 =	10,000 VA	(ELECTRIC RANGE/OVEN)
CONNECTED GENERAL LOAD =	30,551 VA	
CONNECT HEAT/AC LOAD =	4,648 VA	(PER NEC 220.82)
CAR CHARGER @ 125% =	0 VA	(PER NEC 625.42)
TOTAL CONNECTED LOAD =	35,199 VA	
TOTAL DEMAND LOAD =	22,868 VA	(PER NEC 220.82)
TOTAL DEMAND AMPS =	109.94 AMPS	125A @ 208V/1PH SERVICE

RESIDENTIAL UNIT TYPE 2B, 2BS ELECTRICAL SERVICE LOAD SUMMARY

1,122 SQUARE FT. x 3 VA =	3,366 VA	(GENERAL LIGHTING/RECEPTACLE LOAD)
1,500 VA x 2 =	3,000 VA	(SMALL APPLIANCE LOAD)
1,500 VA x 1 =	1,500 VA	(WASHING MACHNE)
5,000 VA x 1 =	5,000 VA	(ELECTRIC DRYER)
4,500 VA x 1 =	4,500 VA	(ELECTRIC WATER HEATER)
1,200 VA x 1 =	1,200 VA	(DISHWASHER)
800 VA x 1 =	800 VA	(DISPOSAL)
840 VA x 1 =	840 VA	(REFRIGERATOR)
1,200 VA x 1 =	1,200 VA	(MICROVAVE/HOOD)
10,000 VA x 1 =	10,000 VA	(ELECTRIC RANGE/OVEN)
CONNECTED GENERAL LOAD =	31,406 VA	
CONNECT HEAT/AC LOAD =	4,648 VA	(PER NEC 220.82)
CAR CHARGER @ 125% =	0 VA	(PER NEC 625.42)
TOTAL CONNECTED LOAD =	36,054 VA	
TOTAL DEMAND LOAD =	23,210 VA	(PER NEC 220.82)
TOTAL DEMAND AMPS =	111.59 AMPS	125A @ 208V/1PH SERVICE

RESIDENTIAL UNIT TYPE 2C ELECTRICAL SERVICE LOAD SUMMARY

1,286 SQUARE FT. x 3 VA =	3,858 VA	(GENERAL LIGHTING/RECEPTACLE LOAD)
1,500 VA x 2 =	3,000 VA	(SMALL APPLIANCE LOAD)
1,500 VA x 1 =	1,500 VA	(WASHING MACHNE)
5,000 VA x 1 =	5,000 VA	(ELECTRIC DRYER)
4,500 VA x 1 =	4,500 VA	(ELECTRIC WATER HEATER)
1,200 VA x 1 =	1,200 VA	(DISHWASHER)
800 VA x 1 =	800 VA	(DISPOSAL)
840 VA x 1 =	840 VA	(REFRIGERATOR)
1,200 VA x 1 =	1,200 VA	(MICROVAVE/HOOD)
10,000 VA x 1 =	10,000 VA	(ELECTRIC RANGE/OVEN)
CONNECTED GENERAL LOAD =	31,898 VA	
CONNECT HEAT/AC LOAD =	5,894 VA	(PER NEC 220.82)
CAR CHARGER @ 125% =	0 VA	(PER NEC 625.42)
TOTAL CONNECTED LOAD =	37,792 VA	
TOTAL DEMAND LOAD =	24,653 VA	(PER NEC 220.82)
TOTAL DEMAND AMPS =	118.53 AMPS	125A @ 208V/1PH SERVICE

RESIDENTIAL UNIT TYPE 3C ELECTRICAL SERVICE LOAD SUMMARY

1,568 SQUARE FT. x 3 VA =	4,704 VA	(GENERAL LIGHTING/RECEPTACLE LOAD)
1,500 VA x 2 =	3,000 VA	(SMALL APPLIANCE LOAD)
1,500 VA x 1 =	1,500 VA	(WASHING MACHNE)
5,000 VA x 1 =	5,000 VA	(ELECTRIC DRYER)
4,500 VA x 1 =	4,500 VA	(ELECTRIC WATER HEATER)
1,200 VA x 1 =	1,200 VA	(DISHWASHER)
800 VA x 1 =	800 VA	(DISPOSAL)
840 VA x 1 =	840 VA	(REFRIGERATOR)
1,200 VA x 1 =	1,200 VA	(MICROVAVE/HOOD)
10,000 VA x 1 =	10,000 VA	(ELECTRIC RANGE/OVEN)
CONNECTED GENERAL LOAD =	32,744 VA	
CONNECT HEAT/AC LOAD =	5,894 VA	(PER NEC 220.82)
CAR CHARGER @ 125% =	0 VA	(PER NEC 625.42)
TOTAL CONNECTED LOAD =	38,638 VA	
TOTAL DEMAND LOAD =	24,992 VA	(PER NEC 220.82)
TOTAL DEMAND AMPS =	120.15 AMPS	125A @ 208V/1PH SERVICE

RESIDENTIAL UNIT TYPE TH ELECTRICAL SERVICE LOAD SUMMARY

1,497 SQUARE FT. x 3 VA =	4,491 VA	(GENERAL LIGHTING/RECEPTACLE LOAD)
1,500 VA x 2 =	3,000 VA	(SMALL APPLIANCE LOAD)
1,500 VA x 1 =	1,500 VA	(WASHING MACHNE)
5,000 VA x 1 =	5,000 VA	(ELECTRIC DRYER)
4,500 VA x 1 =	4,500 VA	(ELECTRIC WATER HEATER)
1,200 VA x 1 =	1,200 VA	(DISHWASHER)
800 VA x 1 =	800 VA	(DISPOSAL)
840 VA x 1 =	840 VA	(REFRIGERATOR)
1,200 VA x 1 =	1,200 VA	(MICROVAVE/HOOD)
10,000 VA x 1 =	10,000 VA	(ELECTRIC RANGE/OVEN)
CONNECTED GENERAL LOAD =	32,531 VA	
CONNECT HEAT/AC LOAD =	5,894 VA	(PER NEC 220.82)
CAR CHARGER @ 125% =	0 VA	(PER NEC 625.42)
TOTAL CONNECTED LOAD =	38,425 VA	
TOTAL DEMAND LOAD =	24,906 VA	(PER NEC 220.82)
TOTAL DEMAND AMPS =	119.74 AMPS	125A @ 208V/1PH SERVICE

TYPICAL UNIT PANEL 'A'

LOCATION: UNIT TYPE '1A', '1B' & '1BS' | VOLTAGE: 120/208V 1ø 3W | MIN. AIC RATING: 22K AIC
TYPE: SQUARE 'D' – TYPE QO | MAINS: 125A ☒ MLO ☐ MCB | MOUNTING: FLUSH
FED FROM: METER CENTER | LUGS: ☐ SUB-FEED ☐ FEED-THRU | ENCLOSURE: NEMA 1

NOTES:
PROVIDE TYPED WRITTEN DIRECTORY
PROVIDE GROUND & NEUTRAL BUS
PROVIDE 'NM' WHERE ALLOWED BY AHJ

CKT	CIRCUIT DESCRIPTION	NOTES	BRANCH CIRCUIT ø	NEUT	GND	COND	BKR	LOAD KVA	PHASE ø	LOAD KVA	BKR	BRANCH CIRCUIT ø	NEUT	GND	COND	NOTES	CIRCUIT DESCRIPTION	CKT
1	KITCHEN RECEPTACLES	1	12	12	12	NM	20/1	1.50	A	1.94	40/2	8	8	10	NM		AHU–1	2
3	KITCHEN RECEPTACLES	1	12	12	12	NM	20/1	1.50	B	1.94	–	8	–	–	–		–	4
5	BATHROOM RECEPTACLES		12	12	12	NM	20/1	1.50	A	1.00	20/2	–	–	–	–	4	CU–1	6
7	REFRIGERATOR	1	14	14	14	NM	15/1	0.84	B	1.00	–	–	–	–	–		–	8
9	GARBAGE DISPOSAL/DISHWASHER	3	12	12	12	NM	20/1	2.00	A	6.00	40/2	8	8	10	NM		RANGE	10
11	MICROWAVE/HOOD	1	12	12	12	NM	20/1	1.20	B	6.00	–	8	–	–	–		–	12
13	BEDROOM LIGHTS/RECEPS – BATHROOM LIGHTS	1	14	14	14	NM	15/1	1.20	A	2.25	30/2	10	10	10	NM	2	EWH–1	14
15	LIVING ROOM LIGHTS/RECEPTACLES	1	14	14	14	NM	15/1	1.20	B	2.25	–	10	–	–	–		–	16
17	KITCHEN LIGHTS/CORRIDOR RECEPTS.	1	14	14	14	NM	15/1	1.20	A	2.50	30/2	10	10	10	NM		DRYER	18
19	SPACE ONLY		–	–	–	–	–	–	B	2.50	–	10	–	–	–		–	20
21	SPACE ONLY		–	–	–	–	–	–	A	1.50	20/1	12	12	12	NM	3	WASHER	22
23	SPACE ONLY		–	–	–	–	–	–	B	–	–	–	–	–	–		SPACE ONLY	24

EQUIPMENT SERVED	CONN. LOAD	L.F.	D.F.	DEMAND LOAD

NOTES:
1) PROVIDE ARC-FAULT CIRCUIT BREAKER PER NEC 210.12
2) PROVIDE "LOCK OUT" STYLE BREAKER HANDLE PER NEC 422.31
3) PROVIDE COMBINATION ARC-FAULT AND GFCI CIRCUIT BREAKER PER NEC 210.12 AND 210.8
4) REFER TO CONDENSING UNIT FEEDER SCHEDULE

TOTAL DEMAND AMPS: 109.94 AMPS PER UNIT SERVICE CALCULATION

TYPICAL UNIT PANEL 'B'

LOCATION: UNIT TYPE '2B' & '2BS' | VOLTAGE: 120/208V 1ø 3W | MIN. AIC RATING: 22K AIC
TYPE: SQUARE 'D' – TYPE QO | MAINS: 125A ☒ MLO ☐ MCB | MOUNTING: FLUSH
FED FROM: METER CENTER | LUGS: ☐ SUB-FEED ☐ FEED-THRU | ENCLOSURE: NEMA 1

NOTES:
PROVIDE TYPED WRITTEN DIRECTORY
PROVIDE GROUND & NEUTRAL BUS
PROVIDE 'NM' WHERE ALLOWED BY AHJ

CKT	CIRCUIT DESCRIPTION	NOTES	BRANCH CIRCUIT ø	NEUT	GND	COND	BKR	LOAD KVA	PHASE ø	LOAD KVA	BKR	BRANCH CIRCUIT ø	NEUT	GND	COND	NOTES	CIRCUIT DESCRIPTION	CKT
1	KITCHEN RECEPTACLES	1	12	12	12	NM	20/1	1.50	A	1.94	40/2	8	8	10	NM		AHU–2	2
3	KITCHEN RECEPTACLES	1	12	12	12	NM	20/1	1.50	B	1.94	–	8	–	–	–		–	4
5	BATHROOM RECEPTACLES		12	12	12	NM	20/1	1.50	A	1.00	30/2	–	–	–	–	4	CU–2	6
7	REFRIGERATOR	1	14	14	14	NM	15/1	0.84	B	1.00	–	–	–	–	–		–	8
9	GARBAGE DISPOSAL/DISHWASHER	3	12	12	12	NM	20/1	2.00	A	6.00	40/2	8	8	10	NM		RANGE	10
11	MICROWAVE/HOOD	1	12	12	12	NM	20/1	1.20	B	6.00	–	8	–	–	–		–	12
13	BEDROOM LIGHTS/RECEPS – BATHROOM LIGHTS	1	14	14	14	NM	15/1	1.20	A	2.25	30/2	10	10	10	NM	2	EWH–1	14
15	LIVING ROOM LIGHTS/RECEPTACLES	1	14	14	14	NM	15/1	1.20	B	2.25	–	10	–	–	–		–	16
17	KITCHEN LIGHTS/CORRIDOR RECEPTS.	1	14	14	14	NM	15/1	1.20	A	2.50	30/2	10	10	10	NM		DRYER	18
19	BATHROOM RECEPTACLES		12	12	12	NM	20/1	1.50	B	2.50	–	10	–	–	–		–	20
21	BEDROOM LIGHTS/RECEPS – BATHROOM LIGHTS	1	14	14	14	NM	15/1	1.20	A	1.50	20/1	12	12	12	NM	3	WASHER	22
23	SPACE ONLY		–	–	–	–	–	–	B	–	–	–	–	–	–		SPACE ONLY	24

EQUIPMENT SERVED	CONN. LOAD	L.F.	D.F.	DEMAND LOAD

NOTES:
1) PROVIDE ARC-FAULT CIRCUIT BREAKER PER NEC 210.12
2) PROVIDE "LOCK OUT" STYLE BREAKER HANDLE PER NEC 422.31
3) PROVIDE COMBINATION ARC-FAULT AND GFCI CIRCUIT BREAKER PER NEC 210.12 AND 210.8
4) REFER TO CONDENSING UNIT FEEDER SCHEDULE

TOTAL DEMAND AMPS: 111.59 AMPS PER UNIT SERVICE CALCULATION

TYPICAL UNIT PANEL 'B1'

LOCATION: UNIT TYPE '2C' | VOLTAGE: 120/208V 1ø 3W | MIN. AIC RATING: 22K AIC
TYPE: SQUARE 'D' – TYPE QO | MAINS: 125A ☒ MLO ☐ MCB | MOUNTING: FLUSH
FED FROM: METER CENTER | LUGS: ☐ SUB-FEED ☐ FEED-THRU | ENCLOSURE: NEMA 1

NOTES:
PROVIDE TYPED WRITTEN DIRECTORY
PROVIDE GROUND & NEUTRAL BUS
PROVIDE 'NM' WHERE ALLOWED BY AHJ

CKT	CIRCUIT DESCRIPTION	NOTES	BRANCH CIRCUIT ø	NEUT	GND	COND	BKR	LOAD KVA	PHASE ø	LOAD KVA	BKR	BRANCH CIRCUIT ø	NEUT	GND	COND	NOTES	CIRCUIT DESCRIPTION	CKT
1	KITCHEN RECEPTACLES	1	12	12	12	NM	20/1	1.50	A	1.94	50/2	8	8	10	NM		AHU–3	2
3	KITCHEN RECEPTACLES	1	12	12	12	NM	20/1	1.50	B	1.94	–	8	–	–	–		–	4
5	BATHROOM RECEPTACLES		12	12	12	NM	20/1	1.50	A	1.00	25/2	–	–	–	–	4	CU–3	6
7	REFRIGERATOR	1	14	14	14	NM	15/1	0.84	B	1.00	–	–	–	–	–		–	8
9	GARBAGE DISPOSAL/DISHWASHER	3	12	12	12	NM	20/1	2.00	A	6.00	40/2	8	8	10	NM		RANGE	10
11	MICROWAVE/HOOD	1	12	12	12	NM	20/1	1.20	B	6.00	–	8	–	–	–		–	12
13	BEDROOM LIGHTS/RECEPS – BATHROOM LIGHTS	1	14	14	14	NM	15/1	1.20	A	2.25	30/2	10	10	10	NM	2	EWH–1	14
15	LIVING ROOM LIGHTS/RECEPTACLES	1	14	14	14	NM	15/1	1.20	B	2.25	–	10	–	–	–		–	16
17	KITCHEN LIGHTS/CORRIDOR RECEPTS.	1	14	14	14	NM	15/1	1.20	A	2.50	30/2	10	10	10	NM		DRYER	18
19	BATHROOM RECEPTACLES		12	12	12	NM	20/1	1.50	B	2.50	–	10	–	–	–		–	20
21	BEDROOM LIGHTS/RECEPS – BATHROOM LIGHTS	1	14	14	14	NM	15/1	1.20	A	1.50	20/1	12	12	12	NM	3	WASHER	22
23	SPACE ONLY		–	–	–	–	–	–	B	–	–	–	–	–	–		SPACE ONLY	24

EQUIPMENT SERVED	CONN. LOAD	L.F.	D.F.	DEMAND LOAD

NOTES:
1) PROVIDE ARC-FAULT CIRCUIT BREAKER PER NEC 210.12
2) PROVIDE "LOCK OUT" STYLE BREAKER HANDLE PER NEC 422.31
3) PROVIDE COMBINATION ARC-FAULT AND GFCI CIRCUIT BREAKER PER NEC 210.12 AND 210.8
4) REFER TO CONDENSING UNIT FEEDER SCHEDULE

TOTAL DEMAND AMPS: 118.53 AMPS PER UNIT SERVICE CALCULATION

MECHANICAL CONDENSING UNIT FEEDER SCHEDULE

240V/1ø RESIDENTIAL LOAD CENTERS

CU # (BREAKER SIZE)	MAXIMUM DISTANCE (FEET)	MINIMUM FEEDER SIZE (COPPER)
CU–1 (20A)	190	(3)#10 AWG CU & (1)#10 AWG CU GND IN 3/4"C
	289	(3)#8 AWG CU & (1)#8 AWG CU GND IN 1"C
CU–2 (30A)	129	(3)#10 AWG CU & (1)#10 AWG CU GND IN 3/4"C
	197	(3)#8 AWG CU & (1)#8 AWG CU GND IN 1"C
	308	(3)#6 AWG CU & (1)#6 AWG CU GND IN 1"C.
CU–3 (25A)	134	(3)#10 AWG CU & (1)#10 AWG CU GND IN 3/4"C
	204	(3)#8 AWG CU & (1)#8 AWG CU GND IN 1"C
	319	(3)#6 AWG CU & (1)#6 AWG CU GND IN 1"C.
CU–4 (30A)	122	(3)#10 AWG CU & (1)#10 AWG CU GND IN 3/4"C
	186	(3)#8 AWG CU & (1)#8 AWG CU GND IN 1"C
	292	(3)#6 AWG CU & (1)#6 AWG CU GND IN 1"C.

NOTES:
1. FEEDER SIZES BASED ON NEC TABLE 310.15(B)(16) 75°C COLUMN.
2. FEEDER SIZES BASED ON 2% VOLTAGE DROP.

TYPICAL UNIT PANEL 'C'

LOCATION: UNIT TYPE 3C | VOLTAGE: 120/208V 1ø 3W | MIN. AIC RATING: 22K AIC
TYPE: SQUARE 'D' – TYPE QO | MAINS: 125A ☒ MLO ☐ MCB | MOUNTING: FLUSH
FED FROM: METER CENTER | LUGS: ☐ SUB-FEED ☐ FEED-THRU | ENCLOSURE: NEMA 1

NOTES:
PROVIDE TYPED WRITTEN DIRECTORY
PROVIDE GROUND & NEUTRAL BUS
TYPE 'NM' CABLE WHERE APPROVED BY A.H.J.

CKT	CIRCUIT DESCRIPTION	NOTES	BRANCH CIRCUIT ø	NEUT	GND	COND	BKR	LOAD KVA	PHASE ø	LOAD KVA	BKR	BRANCH CIRCUIT ø	NEUT	GND	COND	NOTES	CIRCUIT DESCRIPTION	CKT
1	KITCHEN RECEPTACLES	1	12	12	12	NM	20/1	1.50	A	4.71	50/2	8	8	10	NM		AHU–3	2
3	KITCHEN RECEPTACLES	1	12	12	12	NM	20/1	1.50	B	4.71	–	8	–	–	–		–	4
5	BATHROOM RECEPTACLES		12	12	12	NM	20/1	1.50	A	1.79	25/2	–	–	–	–	4	CU–3	6
7	REFRIGERATOR	1	14	14	14	NM	15/1	0.84	B	1.79	–	–	–	–	–		–	8
9	GARBAGE DISPOSAL/DISHWASHER	3	12	12	12	NM	20/1	2.00	A	6.00	40/2	8	8	10	NM		RANGE	10
11	MICROWAVE	1	12	12	12	NM	20/1	1.20	B	6.00	–	8	–	–	–		–	12
13	BEDROOM LIGHTS/RECEPS – BATHROOM LIGHTS	1	14	14	14	NM	15/1	1.20	A	2.25	30/2	10	10	10	NM	2	EWH–1	14
15	LIVING ROOM LIGHTS/RECEPTACLES	1	14	14	14	NM	15/1	1.20	B	2.25	–	10	–	–	–		–	16
17	KITCHEN LIGHTS/CORRIDOR RECEPTS.	1	14	14	14	NM	15/1	1.20	A	2.50	30/2	10	10	10	NM		DRYER	18
19	BATHROOM RECEPTACLES		12	12	12	NM	20/1	1.50	B	2.50	–	10	–	–	–		–	20
21	BEDROOM LIGHTS/RECEPS – BATHROOM LIGHTS	1	14	14	14	NM	15/1	1.20	A	1.50	20/1	12	12	12	NM	3	WASHER	22
23	BEDROOM LIGHTS/RECEPS – BATHROOM LIGHTS	1	14	14	14	NM	15/1	1.20	B	1.20	20/1	12	12	12	NM		GARAGE RECEPTACLES	24
25	SPACE ONLY		–	–	–	–	–	–	A	–	–	–	–	–	–		SPACE ONLY	26
27	SPACE ONLY		–	–	–	–	–	–	B	–	–	–	–	–	–		SPACE ONLY	28
29	SPACE ONLY		–	–	–	–	–	–	A	–	–	–	–	–	–		SPACE ONLY	30

EQUIPMENT SERVED	CONN. LOAD	L.F.	D.F.	DEMAND LOAD

NOTES:
1) PROVIDE ARC-FAULT CIRCUIT BREAKER PER NEC 210.12
2) PROVIDE "LOCK OUT" STYLE BREAKER HANDLE PER NEC 422.31
3) PROVIDE COMBINATION ARC-FAULT AND GFCI CIRCUIT BREAKER PER NEC 210.12 AND 210.8
4) REFER TO CONDENSING UNIT FEEDER SCHEDULE

TOTAL DEMAND AMPS: 120.15 AMPS PER UNIT SERVICE CALCULATION

TYPICAL UNIT PANEL 'TH'

LOCATION: UNIT TYPE 'TH' | VOLTAGE: 120/208V 1ø 3W | MIN. AIC RATING: 22K AIC
TYPE: SQUARE 'D' – TYPE QO | MAINS: 125A ☒ MLO ☐ MCB | MOUNTING: FLUSH
FED FROM: METER CENTER | LUGS: ☐ SUB-FEED ☐ FEED-THRU | ENCLOSURE: NEMA 1

NOTES:
PROVIDE TYPED WRITTEN DIRECTORY
PROVIDE GROUND & NEUTRAL BUS
TYPE 'NM' CABLE WHERE APPROVED BY A.H.J.

CKT	CIRCUIT DESCRIPTION	NOTES	BRANCH CIRCUIT ø	NEUT	GND	COND	BKR	LOAD KVA	PHASE ø	LOAD KVA	BKR	BRANCH CIRCUIT ø	NEUT	GND	COND	NOTES	CIRCUIT DESCRIPTION	CKT
1	KITCHEN RECEPTACLES	1	12	12	12	NM	20/1	1.50	A	4.71	50/2	8	8	10	NM		AHU–4	2
3	KITCHEN RECEPTACLES	1	12	12	12	NM	20/1	1.50	B	4.71	–	8	–	–	–		–	4
5	BATHROOM RECEPTACLES		12	12	12	NM	20/1	1.50	A	1.79	30/2	–	–	–	–	4	CU–4	6
7	REFRIGERATOR	1	14	14	14	NM	15/1	0.84	B	1.79	–	–	–	–	–		–	8
9	GARBAGE DISPOSAL/DISHWASHER	3	12	12	12	NM	20/1	2.00	A	6.00	40/2	8	8	10	NM		RANGE	10
11	MICROWAVE	1	12	12	12	NM	20/1	1.20	B	6.00	–	8	–	–	–		–	12
13	BEDROOM LIGHTS/RECEPS – BATHROOM LIGHTS	1	14	14	14	NM	15/1	1.20	A	2.25	30/2	10	10	10	NM	2	EWH–1	14
15	LIVING ROOM LIGHTS/RECEPTACLES	1	14	14	14	NM	15/1	1.20	B	2.25	–	10	–	–	–		–	16
17	KITCHEN LIGHTS/CORRIDOR RECEPTS.	1	14	14	14	NM	15/1	1.20	A	2.50	30/2	10	10	10	NM		DRYER	18
19	BATHROOM RECEPTACLES		12	12	12	NM	20/1	1.50	B	2.50	–	10	–	–	–		–	20
21	BEDROOM LIGHTS/RECEPS – BATHROOM LIGHTS	1	14	14	14	NM	15/1	1.20	A	1.50	20/1	12	12	12	NM	3	WASHER	22
23	BEDROOM LIGHTS/RECEPS – BATHROOM LIGHTS	1	14	14	14	NM	15/1	1.20	B	1.20	20/1	12	12	12	NM		GARAGE RECEPTACLES	24
25	SPACE ONLY		–	–	–	–	–	–	A	–	–	–	–	–	–		SPACE ONLY	26
27	SPACE ONLY		–	–	–	–	–	–	B	–	–	–	–	–	–		SPACE ONLY	28
29	SPACE ONLY		–	–	–	–	–	–	A	–	–	–	–	–	–		SPACE ONLY	30

EQUIPMENT SERVED	CONN. LOAD	L.F.	D.F.	DEMAND LOAD

NOTES:
1) PROVIDE ARC-FAULT CIRCUIT BREAKER PER NEC 210.12
2) PROVIDE "LOCK OUT" STYLE BREAKER HANDLE PER NEC 422.31
3) PROVIDE COMBINATION ARC-FAULT AND GFCI CIRCUIT BREAKER PER NEC 210.12 AND 210.8
4) REFER TO CONDENSING UNIT FEEDER SCHEDULE

TOTAL DEMAND AMPS: 119.74 AMPS PER UNIT SERVICE CALCULATION

LIGHTING FIXTURE SCHEDULE - TYPICAL UNITS

MARK	DESCRIPTION	MANUFACTURER	MODEL	VOLTS	LAMP QTY	LAMP WATTS	LAMP MODEL	FIXTURE WATTS
A	DECORATIVE SURFACE MOUNTED CEILING FIXTURE LOCATED AT KITCHEN. ENERGY STAR RATED	TBD	TBD	120	1	15	LED	15
B	DECORATIVE LED MINI–PENDANT FIXTURE LOCATED AT KITCHEN. ENERGY STAR RATED.	TBD	TBD	120	1	17	LED	17
B1	DECORATIVE PENDANT FIXTURE LOCATED OVER DINING TABLE. ENERGY STAR RATED.	TBD	TBD	120	1	21	LED	21
C	DECORATIVE LED CEILING MOUNT FIXTURE LOCATED AT HALLWAYS. ENERGY STAR RATED.	TBD	TBD	120	1	17	LED	17
C1	DECORATIVE LED CEILING MOUNT FIXTURE LOCATED AT UTILITY CLOSET. ENERGY STAR RATED.	TBD	TBD	120	1	17	LED	17
D	LED WALL MOUNTED VANITY LIGHT FIXTURE LOCATED ABOVE BATHROOM SINK. ENERGY STAR RATED.	TBD	TBD	120	1	30	LED	30
F	52" CEILING FAN WITH LIGHT KIT LOCATED AT BEDROOMS AND LIVING ROOM. ENERGY STAR RATED.	TBD	TBD	120	1	55	LED	55
F2	52" CEILING FAN WITH LIGHT KIT LOCATED AT PATIO/BALCONY, DAMP LABEL RATED. ENERGY STAR RATED.	TBD	TBD	120	1	55	LED	55
G	LED DOWNLIGHT CLOSE–TO–TUB FIXTURE. UL DAMP LABEL RATED. ENERGY STAR RATED.	TBD	TBD	120	1	21	LED	21
H	EXTERIOR LED SURFACE MOUNTED FIXTURE LOCATED AT BALCONY. UL WET LABEL RATED. ENERGY STAR RATED.	TBD	TBD	120	1	21	LED	21
J	1'X4' LED SURFACE MOUNT FIXTURE LOCATED AT UNIT GARAGES, DAMP LABEL RATED. ENERGY STAR RATED.	TBD	TBD	120	1	25	LED	25
T1	DECORATIVE TRACK LIGHTING LOCATED AT KITCHEN. ENERGY STAR RATED.	TBD	TBD	120	1	–	LED	3WT/FT

NOTES:
1. DIVISION 16 CONTRACTOR SHALL VERIFY ALL FIXTURE TYPES AND FINISHES WITH OWNER PRIOR TO ORDERING.

U.S. DEPARTMENT OF HOUSING AND URBAN DEVELOPMENT

ISSUE HISTORY

No.	Date	Description
1	04/15/22	Permit Submission

REVISION HISTORY

No.	Date	Description

FUGLEBERG KOCH
2555 Temple Trail, Winter Park, FL 32789 (407) 629-0595
www. fuglebergkoch.com AA26002103

CONSULTANT
Joseph, Lawrence & Co Consulting Engineers
1180 HARWOOD AVE. SUITE 3000
ALTAMONTE SPRINGS, FLORIDA 32714
TEL: 321.972.4466
WWW.JLCENG.COM
CA NO. 4050 - E

JLC 22.0023.00

ALABAMA LICENSED No. 31127 PROFESSIONAL ENGINEER BLAKE L. SUDDETH

THE MADISON
HUNTSVILLE, AL

Drawn:	MJR/SMB
Checked:	BLS/AJB
Approval:	BLS/AJB
Date:	04/15/2022
Project #:	5722

SCHEDULES ELECTRICAL

E5.01

© 2018 These documents and their contents are the property of FUGLEBERG KOCH - AA26002103, and are issued only for the specific project noted on these drawings. Any reproductions, revisions, or modifications of these documents without the expressed written consent of Fugleberg Koch is prohibited by law.

RESIDENTIAL BUILDING TYPE A
LOAD SUMMARY - METER CENTER #A

Unit Type 1A	35,199	VA x	3	=	105,597 VA	
Unit Type 1BS	35,199	VA x	12	=	422,388 VA	
Unit Type 2B	36,054	VA x	16	=	576,864 VA	
Unit Type 2C	37,792	VA x	16	=	604,672 VA	
TOTAL CONNECTED UNIT LOAD				=	1,709,521 VA	
TOTAL UNIT DEMAND LOAD				=	444,475 VA	(PER NEC 220.84)
TOTAL HOUSE PANEL LOAD				=	64,210 VA	
TOTAL DEMAND AMPS				=	1,413.02 AMPS	1600A @ 208V/3PH, 4W SERVICE

RESIDENTIAL BUILDING TYPE B
LOAD SUMMARY - METER CENTER #B

Unit Type 1A	35,199	VA x	3	=	105,597 VA	
Unit Type 1B	35,199	VA x	16	=	563,184 VA	
Unit Type 2BS	36,054	VA x	6	=	216,324 VA	
Unit Type 2C	37,792	VA x	8	=	302,336 VA	
Unit Type 3C	38,638	VA x	8	=	309,104 VA	
TOTAL CONNECTED UNIT LOAD				=	1,496,545 VA	
TOTAL UNIT DEMAND LOAD				=	419,033 VA	(PER NEC 220.84)
TOTAL HOUSE PANEL LOAD				=	59,890 VA	
TOTAL DEMAND AMPS				=	1,330.34 AMPS	1600A @ 208V/3PH, 4W SERVICE

RESIDENTIAL BUILDING TYPE C
LOAD SUMMARY - METER CENTER #C

Unit Type TH	38,425	VA x	3	=	115,275 VA	
		VA x	0	=	0 VA	
		VA x	0	=	0 VA	
TOTAL CONNECTED UNIT LOAD				=	115,275 VA	
TOTAL UNIT DEMAND LOAD				=	51,874 VA	(PER NEC 220.84)
TOTAL HOUSE PANEL LOAD				=	1,630 VA	
TOTAL DEMAND AMPS				=	257.23 AMPS	400A @ 208V/3PH, 4W SERVICE

PANEL 'HA' (SECTION 1)

LOCATION: ELECTRICAL ROOM | VOLTAGE: 208Y/120V 3ø 4W | MIN. AIC RATING: 42K AIC
TYPE: SQUARE 'D' – TYPE NQ | MAINS: 400A ☒ MLO ☐ MCB | MOUNTING: SURFACE
FED FROM: METER CENTER #A | LUGS: ☐ SUB-FEED ☒ FEED-THRU | ENCLOSURE: NEMA 1

NOTES:
PROVIDE TYPED WRITTEN DIRECTORY
PROVIDE GROUND & NEUTRAL BUS

CKT	CIRCUIT DESCRIPTION	NOTES	BRANCH CIRCUIT ø	NEUT	GND	COND	BKR	LOAD KVA	PHASE ø	LOAD KVA	BKR	BRANCH CIRCUIT ø	NEUT	GND	COND	NOTES	CIRCUIT DESCRIPTION	CKT
1	FACP	2	12	12	12	1/2"	20/1	0.50	A	4.80	60/3	4	4	10	1.25"		ELEVATOR CONTROLLER	2
3	TTB		12	12	12	1/2"	20/1	0.36	B	4.80	–	4	–	–	–		–	4
5	TTB		12	12	12	1/2"	20/1	0.36	C	4.80	–	4	–	–	–		–	6
7	RCPT – ELECTRICAL ROOM		12	12	12	1/2"	20/1	0.18	A	////	////	–	–	–	–		ELEVATOR SHUNT TRIP COIL	8
9	RCPT – CORRIDOR		10	10	10	3/4'	20/1	0.72	B	1.00	20/1	10	10	10	3/4"		ELEVATOR CAB LIGHTS	10
11	RCPT – CORRIDOR		12	12	12	1/2"	20/1	0.72	C	1.00	20/1	10	10	10	3/4"		ELEVATOR PIT LIGHTS/RECEPS	12
13	RCPT – CORRIDOR		12	12	12	1/2"	20/1	0.72	A	1.00	20/1	10	10	10	3/4"		SUMP PUMP	14
15	RCPT – CORRIDOR		12	12	12	1/2"	20/1	0.72	B	0.18	20/1	10	10	10	3/4"		ELEVATOR SERVICE RECEPTACLE	16
17	WATER METER REPEATER		12	12	12	1/2"	20/1	0.50	C	0.18	20/1	10	10	10	3/4"		ELEVATOR SERVICE RECEPTACLE	18
19	GARAGE DOOR G-153/RCPT		12	12	12	1/2"	20/1	1.68	A	0.22	20/1	12	12	12	1/2"	1	LTG – EXTERIOR	20
21	GARAGE DOOR G-250/RCPT		12	12	12	1/2"	20/1	1.68	B	0.25	20/1	12	12	12	1/2"	1	LTG – EXTERIOR	22
23	GARAGE DOOR G-251/RCPT		12	12	12	1/2"	20/1	1.68	C	0.58	20/1	12	12	12	1/2"		LTG – STAIRWELL	24
25	GARAGE DOOR G-152/RCPT		12	12	12	1/2"	20/1	1.68	A	0.58	20/1	12	12	12	1/2"		LTG – STAIRWELL	26
27	GARAGE DOOR G-151/RCPT		12	12	12	1/2"	20/1	1.68	B	–	20/1	–	–	–	–		SPARE	28
29	GARAGE DOOR G-167/RCPT		12	12	12	1/2"	20/1	1.68	C	–	20/1	–	–	–	–		SPARE	30
31	GARAGE DOOR G-257/RCPT		12	12	12	1/2"	20/1	1.68	A	0.33	20/1	12	12	12	1/2"		LTG – BREEZEWAY/STORAGE/DAS	32
33	GARAGE DOOR G-258/RCPT		12	12	12	1/2"	20/1	1.68	B	0.39	20/1	12	12	12	1/2"		LTG – BREEZEWAY/STORAGE/ELEC	34
35	GARAGE DOOR G-332/RCPT		12	12	12	1/2"	20/1	1.68	C	0.48	20/1	12	12	12	1/2"		LTG – GARAGES	36
37	MCU-1		10	10	10	3/4"	25/2	0.92	A	0.30	20/1	12	12	12	1/2"		LTG – GARAGES	38
39	–		10	–	–	–	–	0.92	B	0.20	20/1	10	10	10	3/4"		LTG – 2ND FLOOR BREEZWAY	40
41	RCPTS – ROOF		10	10	10	3/4"	20/1	0.72	C	0.16	20/1	10	10	10	3/4"		LTG – 2ND FLOOR BREEZWAY	42
43	FIRE SMOKE DAMPERS		12	12	12	1/2"	20/1	0.50	A	0.20	20/1	10	10	10	3/4"		LTG – 3RD FLOOR BREEZWAY	44
45	MCU-1		10	10	10	3/4"	25/2	0.92	B	0.16	20/1	10	10	10	3/4"		LTG – 3RD FLOOR BREEZWAY	46
47	–		10	–	–	–	–	0.92	C	0.20	20/1	10	10	10	3/4"		LTG – 4TH FLOOR BREEZWAY	48
49	SPARE		–	–	–	–	20/1	–	A	0.16	20/1	10	10	10	3/4"		LTG – 4TH FLOOR BREEZWAY	50
51	SPARE		–	–	–	–	20/1	–	B	–	20/1	10	10	10	3/4"		SPARE	52
53	SPARE		–	–	–	–	20/1	–	C	–	20/1	10	10	10	3/4"		SPARE	54

EQUIPMENT SERVED	CONN. LOAD	L.F.	D.F.	DEMAND LOAD	
LIGHTING	5.22 KVA		125%	6.53 KVA	
RECEPTACLES – GENERAL	4.14 KVA		100%	4.14 KVA	
EQUIPMENT	37.42 KVA		100%	37.42 KVA	
PANELS (SECTION 2)	18.00 KVA		100%	18.00 KVA	
NOTES: 1) CONNECT VIA LIGHTING CONTACTOR 2) PROVIDE "LOCK OUT" STYLE BREAKER HANDLE PER NEC 422.31 3) SPLIT A/C, CONDENSING UNIT NOT INCLUDED IN LOAD CALC					TOTAL DEMAND LOAD: 66.09 KVA TOTAL DEMAND AMPS: 183.44 AMPS

PANEL 'HB' (SECTION 1)

LOCATION: ELECTRICAL ROOM | VOLTAGE: 208Y/120V 3ø 4W | MIN. AIC RATING: 42K AIC
TYPE: SQUARE 'D' – TYPE NQ | MAINS: 400A ☒ MLO ☐ MCB | MOUNTING: SURFACE
FED FROM: METER CENTER #B | LUGS: ☐ SUB-FEED ☒ FEED-THRU | ENCLOSURE: NEMA 1

NOTES:
PROVIDE TYPED WRITTEN DIRECTORY
PROVIDE GROUND & NEUTRAL BUS

CKT	CIRCUIT DESCRIPTION	NOTES	BRANCH CIRCUIT ø	NEUT	GND	COND	BKR	LOAD KVA	PHASE ø	LOAD KVA	BKR	BRANCH CIRCUIT ø	NEUT	GND	COND	NOTES	CIRCUIT DESCRIPTION	CKT
1	FACP	2	12	12	12	1/2"	20/1	0.50	A	4.80	60/3	4	4	10	1.25"		ELEVATOR CONTROLLER	
3	TTB		12	12	12	1/2"	20/1	0.36	B	4.80	–	4	–	–	–		–	
5	TTB		12	12	12	1/2"	20/1	0.36	C	4.80	–	4	–	–	–		–	
7	RCPT – ELECTRICAL ROOM		12	12	12	1/2"	20/1	0.18	A	////	////	–	–	–	–		ELEVATOR SHUNT TRIP COIL	
9	RCPT – CORRIDOR		10	10	10	3/4'	20/1	0.72	B	1.00	20/1	10	10	10	3/4"		ELEVATOR CAB LIGHTS	10
11	RCPT – CORRIDOR		12	12	12	1/2"	20/1	0.72	C	1.00	20/1	10	10	10	3/4"		ELEVATOR PIT LIGHTS/RECEPS	12
13	RCPT – CORRIDOR		12	12	12	1/2"	20/1	0.72	A	1.00	20/1	10	10	10	3/4"		SUMP PUMP	14
15	RCPT – CORRIDOR		12	12	12	1/2"	20/1	0.72	B	0.18	20/1	10	10	10	3/4"		ELEVATOR SERVICE RECEPTACLE	16
17	WATER METER REPEATER		12	12	12	1/2"	20/1	0.50	C	0.18	20/1	10	10	10	3/4"		ELEVATOR SERVICE RECEPTACLE	18
19	GARAGE DOOR G-323/RCPT		12	12	12	1/2"	20/1	1.68	A	0.22	20/1	12	12	12	1/2"	1	LTG – EXTERIOR	20
21	GARAGE DOOR G-263/RCPT		12	12	12	1/2"	20/1	1.68	B	0.25	20/1	12	12	12	1/2"	1	LTG – EXTERIOR	22
23	GARAGE DOOR G-213/RCPT		12	12	12	1/2"	20/1	1.68	C	0.58	20/1	12	12	12	1/2"		LTG – STAIRWELL	24
25	GARAGE DOOR G-264/RCPT		12	12	12	1/2"	20/1	1.68	A	0.58	20/1	12	12	12	1/2"		LTG – STAIRWELL	26
27	GARAGE DOOR G-218/RCPT		12	12	12	1/2"	20/1	1.68	B	–	20/1	–	–	–	–		SPARE	28
29	GARAGE DOOR G-265/RCPT		12	12	12	1/2"	20/1	1.68	C	–	20/1	–	–	–	–		SPARE	30
31	GARAGE DOOR G-326/RCPT		12	12	12	1/2"	20/1	1.68	A	0.23	20/1	12	12	12	1/2"		LTG – BREEZEWAY/STORAGE/DAS	32
33	MCU-1		10	10	10	3/4"	25/2	0.92	B	0.24	20/1	12	12	12	1/2"		LTG – BREEZEWAY/STORAGE/ELEC	34
35	–		10	–	–	–	–	0.92	C	0.40	20/1	12	12	12	1/2"		LTG – GARAGES	36
37	RCPTS – ROOF		10	10	10	3/4"	20/1	0.72	A	0.23	20/1	12	12	12	1/2"		LTG – GARAGES	38
39	FIRE SMOKE DAMPERS		12	12	12	1/2"	20/1	0.50	B	0.14	20/1	10	10	10	3/4"		LTG – 2ND FLOOR BREEZWAY	40
41	MCU-1		10	10	10	3/4"	25/2	0.92	C	0.10	20/1	10	10	10	3/4"		LTG – 2ND FLOOR BREEZWAY	42
43	–		10	–	–	–	–	0.92	A	0.14	20/1	10	10	10	3/4"		LTG – 3RD FLOOR BREEZWAY	44
45	SPARE		–	–	–	–	20/1	–	B	0.10	20/1	10	10	10	3/4"		LTG – 3RD FLOOR BREEZWAY	46
47	SPARE		–	–	–	–	20/1	–	C	0.14	20/1	10	10	10	3/4"		LTG – 4TH FLOOR BREEZWAY	48
49	SPARE		–	–	–	–	20/1	–	A	0.10	20/1	10	10	10	3/4"		LTG – 4TH FLOOR BREEZWAY	50
51	SPARE		–	–	–	–	20/1	–	B	–	20/1	10	10	10	3/4"		SPARE	52
53	SPARE		–	–	–	–	20/1	–	C	–	20/1	10	10	10	3/4"		SPARE	54

EQUIPMENT SERVED	CONN. LOAD	L.F.	D.F.	DEMAND LOAD	
LIGHTING	4.46 KVA		125%	5.57 KVA	
RECEPTACLES – GENERAL	4.14 KVA		100%	4.14 KVA	
EQUIPMENT	34.06 KVA		100%	34.06 KVA	
PANELS (SECTION 2)	18.00 KVA		100%	18.00 KVA	
NOTES: 1) CONNECT VIA LIGHTING CONTACTOR 2) PROVIDE "LOCK OUT" STYLE BREAKER HANDLE PER NEC 422.31 3) SPLIT A/C, CONDENSING UNIT NOT INCLUDED IN LOAD CALC					TOTAL DEMAND LOAD: 61.77 KVA TOTAL DEMAND AMPS: 171.46 AMPS

PANEL 'HC'

LOCATION: EXTERIOR | VOLTAGE: 120/208V 1ø 3W | MIN. AIC RATING: 22K AIC
TYPE: SQUARE 'D' – TYPE NQ | MAINS: 125A ☒ MLO ☐ MCB | MOUNTING: SURFACE
FED FROM: METER CENTER #C | LUGS: ☐ SUB-FEED ☐ FEED-THRU | ENCLOSURE: NEMA 3R

NOTES:
PROVIDE TYPED WRITTEN DIRECTORY
PROVIDE GROUND & NEUTRAL BUS

CKT	CIRCUIT DESCRIPTION	NOTES	BRANCH CIRCUIT ø	NEUT	GND	COND	BKR	LOAD KVA	PHASE ø	LOAD KVA	BKR	BRANCH CIRCUIT ø	NEUT	GND	COND	NOTES	CIRCUIT DESCRIPTION	CKT
1	TTB		12	12	12	1/2"	20/1	0.36	A	0.18	20/1	12	12	12	1/2"	1	LTG – EXTERIOR	2
3	RCPTS – EXTERIOR		12	12	12	1/2"	20/1	0.54	B	–	20/1	–	–	–	–		SPARE	4
5	RCPTS – EXTERIOR		12	12	12	1/2"	20/1	0.36	A	–	20/1	–	–	–	–		SPARE	6
7	SPARE		–	–	–	–	20/1	–	B	–	20/1	–	–	–	–		SPARE	8
9	SPARE		–	–	–	–	20/1	–	A	–	20/1	–	–	–	–		SPARE	10
11	SPARE		–	–	–	–	20/1	–	B	–	20/1	–	–	–	–		SPARE	12
13	SPARE		–	–	–	–	20/1	–	A	–	20/1	–	–	–	–		SPARE	14
15	SPARE		–	–	–	–	20/1	–	B	–	20/1	–	–	–	–		SPARE	16
17	SPARE		–	–	–	–	20/1	–	A	–	20/1	–	–	–	–		SPARE	18
19	SPARE		–	–	–	–	20/1	–	B	–	20/1	–	–	–	–		SPARE	20
21	SPARE		–	–	–	–	20/1	–	A	–	–	–	–	–	–		SPACE ONLY	22
23	SPARE		–	–	–	–	20/1	–	B	–	–	–	–	–	–		SPACE ONLY	24
25	SPARE		–	–	–	–	20/1	–	A	–	–	–	–	–	–		SPACE ONLY	26
27	SPARE		–	–	–	–	20/1	–	B	–	–	–	–	–	–		SPACE ONLY	28
29	SPACE ONLY		–	–	–	–	–	–	A	–	–	–	–	–	–		SPACE ONLY	30
31	SPACE ONLY		–	–	–	–	–	–	B	–	–	–	–	–	–		SPACE ONLY	32
33	SPACE ONLY		–	–	–	–	–	–	A	–	–	–	–	–	–		SPACE ONLY	34
35	SPACE ONLY		–	–	–	–	–	–	B	–	–	–	–	–	–		SPACE ONLY	36
37	SPACE ONLY		–	–	–	–	–	–	A	–	–	–	–	–	–		SPACE ONLY	38
39	SPACE ONLY		–	–	–	–	–	–	B	–	30/2	10	10	10	3/4"		SURGE PROTECTION	40
41	SPACE ONLY		–	–	–	–	–	–	A	–	–	10	–	–	–		–	42

EQUIPMENT SERVED	CONN. LOAD	L.F.	D.F.	DEMAND LOAD	
LIGHTING	0.18 KVA		125%	0.23 KVA	
RECEPTACLES – GENERAL	0.90 KVA		100%	0.90 KVA	
EQUIPMENT	0.50 KVA		100%	0.50 KVA	
NOTES: 1) CONNECT VIA LIGHTING CONTACTOR 2) PROVIDE "LOCK OUT" STYLE BREAKER HANDLE PER NEC 422.31 3) SPLIT A/C, CONDENSING UNIT NOT INCLUDED IN LOAD CALC					TOTAL DEMAND LOAD: 1.63 KVA TOTAL DEMAND AMPS: 7.76 AMPS

PANEL 'HA' (SECTION 2)

LOCATION: ELECTRICAL ROOM | VOLTAGE: 208Y/120V 3ø 4W | MIN. AIC RATING: 42K AIC
TYPE: SQUARE 'D' – TYPE NQ | MAINS: 400A ☒ MLO ☐ MCB | MOUNTING: SURFACE
FED FROM: METER CENTER #A | LUGS: ☐ SUB-FEED ☒ FEED-THRU | ENCLOSURE: NEMA 1

NOTES:
PROVIDE TYPED WRITTEN DIRECTORY
PROVIDE GROUND & NEUTRAL BUS

CKT	CIRCUIT DESCRIPTION	NOTES	BRANCH CIRCUIT ø	NEUT	GND	COND	BKR	LOAD KVA	PHASE ø	LOAD KVA	BKR	BRANCH CIRCUIT ø	NEUT	GND	COND	NOTES	CIRCUIT DESCRIPTION	CKT
55	AHU-1.1		10	10	10	3/4"	30/2	2.25	A	1.41	25/2	10	10	10	3/4"	3	CU-1.1	56
57	–		10	–	–	–	–	2.25	B	1.41	–	10	–	–	–		–	58
59	AHU-1.2		10	10	10	3/4"	30/2	2.25	C	1.41	25/2	10	10	10	3/4"	3	CU-1.2	60
61	–		10	–	–	–	–	2.25	A	1.41	–	10	–	–	–		–	62
63	AHU-1.3		10	10	10	3/4"	30/2	2.25	B	1.41	25/2	10	10	10	3/4"	3	CU-1.3	64
65	–		10	–	–	–	–	2.25	C	1.41	–	10	–	–	–		–	66
67	AHU-1.4		10	10	10	3/4"	30/2	2.25	A	1.41	25/2	10	10	10	3/4"	3	CU-1.4	68
69	–		10	–	–	–	–	2.25	B	1.41	–	10	–	–	–		–	70
71	SPACE ONLY		–	–	–	–	–	–	C	–	–	–	–	–	–		SPACE ONLY	72
73	SPACE ONLY		–	–	–	–	–	–	A	–	–	–	–	–	–		SPACE ONLY	74
75	SPACE ONLY		–	–	–	–	–	–	B	–	–	–	–	–	–		SPACE ONLY	76
77	SPACE ONLY		–	–	–	–	–	–	C	–	–	–	–	–	–		SPACE ONLY	78
79	SPACE ONLY		–	–	–	–	–	–	A	–	–	–	–	–	–		SPACE ONLY	80
81	SPACE ONLY		–	–	–	–	–	–	B	–	–	–	–	–	–		SPACE ONLY	82
83	SPACE ONLY		–	–	–	–	–	–	C	–	–	–	–	–	–		SPACE ONLY	84
85	SPACE ONLY		–	–	–	–	–	–	A	–	–	–	–	–	–		SPACE ONLY	86
87	SPACE ONLY		–	–	–	–	–	–	B	–	–	–	–	–	–		SPACE ONLY	88
89	SPACE ONLY		–	–	–	–	–	–	C	–	–	–	–	–	–		SPACE ONLY	90
91	SPACE ONLY		–	–	–	–	–	–	A	–	–	–	–	–	–		SPACE ONLY	92
93	SPACE ONLY		–	–	–	–	–	–	B	–	–	–	–	–	–		SPACE ONLY	94
95	SPACE ONLY		–	–	–	–	–	–	C	–	–	–	–	–	–		SPACE ONLY	96
97	SPACE ONLY		–	–	–	–	–	–	A	–	–	–	–	–	–		SPACE ONLY	98
99	SPACE ONLY		–	–	–	–	–	–	B	–	–	–	–	–	–		SPACE ONLY	100
101	SPACE ONLY		–	–	–	–	–	–	C	–	–	–	–	–	–		SPACE ONLY	102
103	SPACE ONLY		–	–	–	–	–	–	A	–	30/3	10	10	10	3/4"		SURGE PROTECTION	104
105	SPACE ONLY		–	–	–	–	–	–	B	–	–	10	–	–	–		–	106
107	SPACE ONLY		–	–	–	–	–	–	C	–	–	10	–	–	–		–	108

EQUIPMENT SERVED	CONN. LOAD	L.F.	D.F.	DEMAND LOAD	
LIGHTING	– KVA		125%	– KVA	
RECEPTACLES – GENERAL	– KVA		100%	– KVA	
EQUIPMENT	18.00 KVA		100%	18.00 KVA	
NOTES: 1) CONNECT VIA LIGHTING CONTACTOR 2) PROVIDE "LOCK OUT" STYLE BREAKER HANDLE PER NEC 422.31 3) SPLIT A/C, CONDENSING UNIT NOT INCLUDED IN LOAD CALC					TOTAL DEMAND LOAD: 18.00 KVA LOAD CARRIED OVER TO FIRST SECTION

PANEL 'HB' (SECTION 2)

LOCATION: ELECTRICAL ROOM | VOLTAGE: 208Y/120V 3ø 4W | MIN. AIC RATING: 42K AIC
TYPE: SQUARE 'D' – TYPE NQ | MAINS: 400A ☒ MLO ☐ MCB | MOUNTING: SURFACE
FED FROM: METER CENTER #B | LUGS: ☐ SUB-FEED ☒ FEED-THRU | ENCLOSURE: NEMA 1

NOTES:
PROVIDE TYPED WRITTEN DIRECTORY
PROVIDE GROUND & NEUTRAL BUS

CKT	CIRCUIT DESCRIPTION	NOTES	BRANCH CIRCUIT ø	NEUT	GND	COND	BKR	LOAD KVA	PHASE ø	LOAD KVA	BKR	BRANCH CIRCUIT ø	NEUT	GND	COND	NOTES	CIRCUIT DESCRIPTION	CKT
55	AHU-2.1		10	10	10	3/4"	30/2	2.25	A	1.41	25/2	10	10	10	3/4"	3	CU-2.1	56
57	–		10	–	–	–	–	2.25	B	1.41	–	10	–	–	–		–	58
59	AHU-2.2		10	10	10	3/4"	30/2	2.25	C	1.41	25/2	10	10	10	3/4"	3	CU-2.2	60
61	–		10	–	–	–	–	2.25	A	1.41	–	10	–	–	–		–	62
63	AHU-2.3		10	10	10	3/4"	30/2	2.25	B	1.41	25/2	10	10	10	3/4"	3	CU-2.3	64
65	–		10	–	–	–	–	2.25	C	1.41	–	10	–	–	–		–	66
67	AHU-2.4		10	10	10	3/4"	30/2	2.25	A	1.41	25/2	10	10	10	3/4"	3	CU-2.4	68
69	–		10	–	–	–	–	2.25	B	1.41	–	10	–	–	–		–	70
71	SPACE ONLY		–	–	–	–	–	–	C	–	–	–	–	–	–		SPACE ONLY	72
73	SPACE ONLY		–	–	–	–	–	–	A	–	–	–	–	–	–		SPACE ONLY	74
75	SPACE ONLY		–	–	–	–	–	–	B	–	–	–	–	–	–		SPACE ONLY	76
77	SPACE ONLY		–	–	–	–	–	–	C	–	–	–	–	–	–		SPACE ONLY	78
79	SPACE ONLY		–	–	–	–	–	–	A	–	–	–	–	–	–		SPACE ONLY	80
81	SPACE ONLY		–	–	–	–	–	–	B	–	–	–	–	–	–		SPACE ONLY	82
83	SPACE ONLY		–	–	–	–	–	–	C	–	–	–	–	–	–		SPACE ONLY	84
85	SPACE ONLY		–	–	–	–	–	–	A	–	–	–	–	–	–		SPACE ONLY	86
87	SPACE ONLY		–	–	–	–	–	–	B	–	–	–	–	–	–		SPACE ONLY	88
89	SPACE ONLY		–	–	–	–	–	–	C	–	–	–	–	–	–		SPACE ONLY	90
91	SPACE ONLY		–	–	–	–	–	–	A	–	–	–	–	–	–		SPACE ONLY	92
93	SPACE ONLY		–	–	–	–	–	–	B	–	–	–	–	–	–		SPACE ONLY	94
95	SPACE ONLY		–	–	–	–	–	–	C	–	–	–	–	–	–		SPACE ONLY	96
97	SPACE ONLY		–	–	–	–	–	–	A	–	–	–	–	–	–		SPACE ONLY	98
99	SPACE ONLY		–	–	–	–	–	–	B	–	–	–	–	–	–		SPACE ONLY	100
101	SPACE ONLY		–	–	–	–	–	–	C	–	–	–	–	–	–		SPACE ONLY	102
103	SPACE ONLY		–	–	–	–	–	–	A	–	30/3	10	10	10	3/4"		SURGE PROTECTION	104
105	SPACE ONLY		–	–	–	–	–	–	B	–	–	10	–	–	–		–	106
107	SPACE ONLY		–	–	–	–	–	–	C	–	–	10	–	–	–		–	108

EQUIPMENT SERVED	CONN. LOAD	L.F.	D.F.	DEMAND LOAD	
LIGHTING	– KVA		125%	– KVA	
RECEPTACLES – GENERAL	– KVA		100%	– KVA	
EQUIPMENT	18.00 KVA		100%	18.00 KVA	
NOTES: 1) CONNECT VIA LIGHTING CONTACTOR 2) PROVIDE "LOCK OUT" STYLE BREAKER HANDLE PER NEC 422.31 3) SPLIT A/C, CONDENSING UNIT NOT INCLUDED IN LOAD CALC					TOTAL DEMAND LOAD: 18.00 KVA LOAD CARRIED OVER TO FIRST SECTION

LIGHTING FIXTURE SCHEDULE - BUILDINGS

MARK	DESCRIPTION	MANUFACTURER	MODEL	VOLTS	LAMP QTY	LAMP WATTS	LAMP MODEL	FIXTURE WATTS
BA	7" ROUND LED SLIM SURFACE MOUNTED FIXTURE ALUMINUM FINISH, UL LISTED, ENERGY STAR CERTIFIED, DAMP LOCATION RATED LOCATED AT MAIN CORRIDORS AND MISC. ROOMS.	PHILLIPS	S7R835K10AL	120	–	14.4	LED	14.4
BB	7" ROUND LED SLIM SURFACE MOUNTED FIXTURE ALUMINUM FINISH, UL LISTED, ENERGY STAR CERTIFIED, DAMP LOCATION RATED LOCATED AT STORAGE CLOSETS.	PHILLIPS	S7R835K10AL	120	1	14.4	LED	14.4
BC	4' SURFACE MOUNTED LED STAIRWELL WITH INTEGRATED MOTION SENSOR AND BI-LEVEL BALLAST.	PHILLIPS	SF4C38A35UDZT-US-EMLED	120	1	53	LED	53
BD	SURFACE MOUNTED HIGH OUTPUT LED WRAP WITH EMERGENCY BATTERY BACKUP LOCATED AT ELEVATOR.	H.E. WILLIAMS	75L-4-L50/835-AF12125-EM/10WLP-DIM-UNV	120	1	37	LED	37
BF	1'X4' LED WRAPAROUND FIXTURE WITH BAKED WHITE FINISH, FROSTED ACRYLIC LENS, DAMP LOCATED RATED LOCATED AT ELECTRICAL ROOMS AND GARAGES.	PHILLIPS	FSW-4-30L-835-UNV-DIM	120	1	31	LED	31
BJ	1'X4' LED SURFACE MOUNTED ENCLOSED AND GASKETED FIBERGLASS FIXTURE. UL WET LABEL RATED.	COLUMBIA	LXEM4-35ML-DFA-EU	120	1	47	LED	47
BW	EXTERIOR BUILDING LED WALL SCONCE IN DIE-CAST ALUMINUM HOUSING, IP RATED, UL WET LABEL RATED	H.E. WILLIAMS	VWPH-L30/740-T3-DBZ-SDGL-DIM-UNV	120	1	36	LED	36
EM	WALL MOUNTED EMERGENCY LIGHT WITH THERMOPLASTIC HOUSING, WHITE FINISH, TWIN HEADS AND BATTERY BACKUP.	BEGHELLI	PEH-T20	120	2	1.7	LED	3.4
EM2	WALL MOUNTED ECCO LUNA LED EMERGENCY LIGHT WITH CORROSION/FLAME/VANDAL RESISTANT POLYCARBONATE HOUSING, BATTERY BACKUP, UL WET LABEL RATED	BEGHELLI	EL-SE-205LED-120/277-W	120	2	5	LED	10
X1	UNIVERSAL FACE/MOUNT EXIT SIGN WITH WHITE THERMOPLASTIC HOUSING, RED LETTERS, BATTERY BACKUP, DAMP LABEL RATED	BEGHELLI	PX-R-SA-AT	120	–	–	LED	–

NOTES:
1. DIVISION 16 CONTRACTOR SHALL VERIFY ALL FIXTURE TYPES AND FINISHES WITH OWNER PRIOR TO ORDERING.

ISSUE HISTORY

No.	Date	Description
1	04/15/22	Permit Submission

REVISION HISTORY

No.	Date	Description

FUGLEBERG KOCH
2555 Temple Trail, Winter Park, FL 32789 (407) 629-0595
www. fuglebergkoch.com AA26002103

CONSULTANT
Joseph, Lawrence & Co
Consulting Engineers
1180 HARWOOD AVE. SUITE 3000
ALTAMONTE SPRINGS, FLORIDA 32714
TEL: 321.972.4466
WWW.JLCENG.COM
CA NO. 4050 - E
JLC 22.0023.00

ALABAMA LICENSED No. 31127 PROFESSIONAL ENGINEER BLAKE L. SUDDETH

THE MADISON
HUNTSVILLE, AL

Drawn:	MJR/SMB
Checked:	BLS/AJB
Approval:	BLS/AJB
Date:	04/15/2022
Project #:	5722

SCHEDULES
ELECTRICAL

E5.02

© 2018 These documents and their contents are the property of FUGLEBERG KOCH - AA26002103, and are issued only for the specific project noted on these drawings. Any reproductions, revisions, or modifications of these documents without the expressed written consent of Fugleberg Koch is prohibited by law.

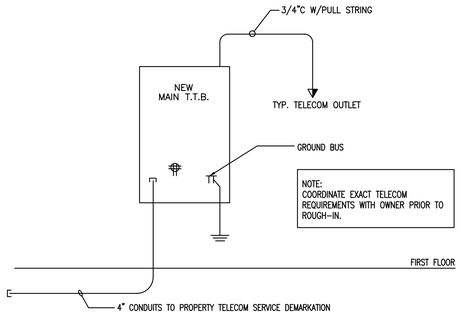

4 NTS COMMUNICATION RISER DIAGRAM

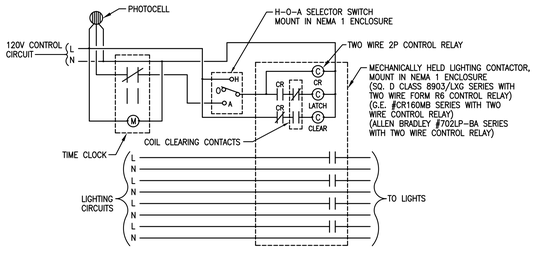

NOTE:
PROVIDE, INSTALL & CONNECT ADDITIONAL CONTACTS AND/OR CONTACTORS COMPLETE WITH ENCLOSURES AS REQUIRED PER APPLICATION, SEE ELECTRICAL DRAWINGS TO DETERMINE EXACT NUMBER OF POLES. SEE ELECTRICAL DRAWINGS FOR ACTUAL CIRCUIT NUMBERS. PROVIDE MINIMUM OF (2) ADDITIONAL/SPARE CONTACTS.

5 NTS CONTACTOR 'LC1' SCHEMATIC - PHOTOCELL & TIMECLOCK CONTROLLED

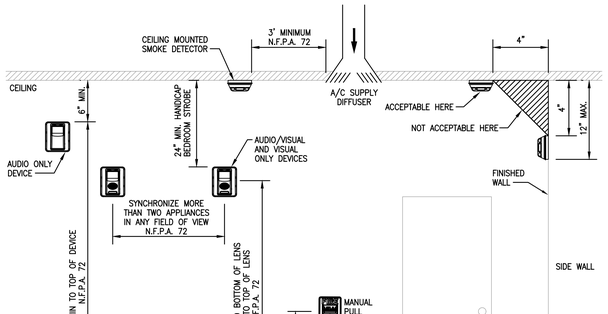

6 NTS STANDARD MOUNTING HEIGHT DETAIL

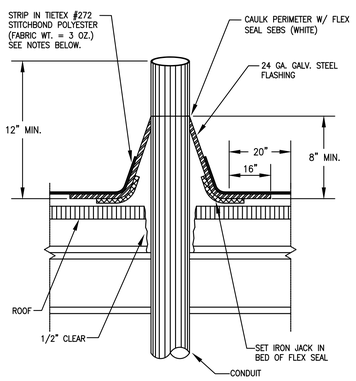

NOTES:
1. ALL SURFACES TO BE CLEAN (FREE OF DIRT, GREASE, SCALE, PAINT, ETC.)
2. WIRE BRUSH ALL LOOSE MATERIAL AS REQUIRED.
3. PRIME EXISTING ROOF AND FLASHING W/ SB ELASTOMERIC PRIMER.
4. 5 COURSE: 2 PLYS TIETEX W/ SB ELASTOMERIC GEL (FEATHER SECOND PLY) AT MIN. 40 MIL UNCURED PER COURSE.
5. TOP COAT W/ K-2 EXTREME DUTY ELASTOMER (MATCH ROOF COLOR)
6. DETAIL SHOW FOR WEATHERPROOFING PENETRATION ONLY. CONTRACTOR SHALL PROVIDE FIRESTOPPING AS REQUIRED TO MAINTAIN FIRE RATING OF ROOF.

1 NTS ROOF PENETRATION WEATHERPROOF DETAIL

CLASSIFIED c UL us
Classified by Underwriters Laboratories, Inc. to UL 1479 and CAN/ULC-S115

System No. W-J-1020
F Rating — 2 Hr
T Ratings — 0 and 1/4 Hr (See Item 3B)
L Rating At Ambient — Less Than 1 CFM/Sq Ft
L Rating At 400 F — 4 CFM/Sq Ft

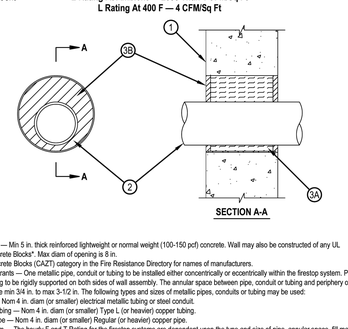

SECTION A-A

1. Wall Assembly — Min 5 in. thick reinforced lightweight or normal weight (100-150 pcf) concrete. Wall may also be constructed of any UL Classified Concrete Blocks*. Max diam of opening is 8 in.
   See Concrete Blocks (CAZT) category in the Fire Resistance Directory for names of manufacturers.
2. Through Penetrants — One metallic pipe, conduit or tubing to be installed either concentrically or eccentrically within the firestop system. Pipe, conduit or tubing to be rigidly supported on both sides of wall assembly. The annular space between pipe, conduit or tubing and periphery of opening shall be min 3/4 in. to max 3-1/2 in. The following types and sizes of metallic pipes, conduits or tubing may be used:
   A. Conduit — Nom 4 in. diam (or smaller) electrical metallic tubing or steel conduit.
   B. Copper Tubing — Nom 4 in. diam (or smaller) Type L (or heavier) copper tubing.
   C. Copper Pipe — Nom 4 in. diam (or smaller) Regular (or heavier) copper pipe.
3. Firestop System — The hourly F and T Rating for the firestop systems are dependent upon the type and size of pipe, annular space, fill material thickness and fill material type as described in the table below. When the annular space in the table shows a range of distances, the penetrating item may be installed either concentrically or eccentrically within the firestop system. The firestop systems shall consist of the following:
   A. Packing Material — Mineral wool batt insulation firmly packed into opening as a permanent form. As an option to the above, backer rod and/or foamed plastic backer material may be used. Packing material to be recessed from both surfaces of wall as required to accommodate the required thickness of fill material.
   B. Fill, Void or Cavity Material — Sealant* — Applied within the annulus, flush with both surfaces of wall as shown in the table below:

Pipe Type	Min Fill Mtl Thkns In.	F Rating Hr.	T Rating Hr.
2A	1/4	2	1/4
2B	1/2	2	0

*Bearing the UL Classification Mark

2 NTS UL FIRE RATED DETAIL (W-J-1020)

CLASSIFIED c UL us
Classified by Underwriters Laboratories, Inc. to UL 1479 and CAN/ULC-S115

System No. W-L-1175
F Ratings - 1 and 2 Hr (See Item 1)
T Rating - 0 Hr
L Rating at Ambient - Less Than 1 CFM/sq ft
L Rating at 400 F - Less Than 1 CFM/sq ft

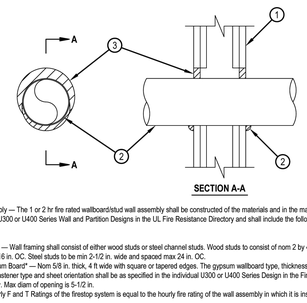

SECTION A-A

1. Wall Assembly — The 1 or 2 hr fire rated wallboard/stud wall assembly shall be constructed of the materials and in the manner specified in the individual U300 or U400 Series Wall and Partition Designs in the UL Fire Resistance Directory and shall include the following construction features.

   A. Studs — Wall framing shall consist of either wood studs or steel channel studs. Wood studs to consist of nom 2 by 4 in. lumber spaced 16 in. OC. Steel studs to be min 2-1/2 in. wide and spaced max 24 in. OC.
   B. Gypsum Board* — Nom 5/8 in. thick, 4 ft wide with square or tapered edges. The gypsum wallboard type, thickness, number of layers, fastener type and sheet orientation shall be as specified in the individual U300 or U400 Series Design in the Fire Resistance Directory. Max diam of opening is 5-1/2 in.
   The hourly F and T Ratings of the firestop system is equal to the hourly fire rating of the wall assembly in which it is installed.

2. Through Penetrant — One metallic tubing or conduit installed concentrically or eccentrically within the firestop system. Tube or conduit to be rigidly supported on both sides of wall assembly. The annular space between the tube or conduit and periphery of the steel sleeve shall be min 0 in. (point contact) to max 1 in. The following types and sizes of metallic tube or conduit may be used:

   A. Conduit — Nom 4 in. diam (or smaller) steel electrical metallic tubing or steel conduit.

3. Fill Void or Cavity Material* — Putty — Min 5/8 in. thickness of fill material applied within the annulus, flush with both surfaces of wall. At point contact location between penetrant and wall, a 1/4 in. crown of fill material shall be applied at the conduit/wall interface on both sides of the assembly, lapping 1/4 in. on the conduit and 1/4 in. beyond the periphery of the opening.

*Bearing the UL Classification Mark

3 NTS UL FIRE RATED DETAIL (W-L-1175)

ISSUE HISTORY

No.	Date	Description
1	04/15/22	Permit Submission

REVISION HISTORY

No.	Date	Description

FUGLEBERG KOCH
2555 Temple Trail, Winter Park, FL 32789 (407) 629-0595
www.fuglebergkoch.com AA26002103

CONSULTANT
Joseph, Lawrence & Co
Consulting Engineers
1180 HARWOOD AVE. SUITE 3000
ALTAMONTE SPRINGS, FLORIDA 32714
TEL: 321.972.4466
WWW.JLCENG.COM
CA NO. 4050 - E

JLC 22.0023.00

THE MADISON
HUNTSVILLE, AL

Drawn:	MJR/SMB
Checked:	BLS/AJB
Approved:	BLS/AJB
Date:	04/15/2022
Project #	5722

DETAILS
ELECTRICAL

E6.01

© 2015 These documents and their contents are the property of FUGLEBERG KOCH - AA26002105, and are based on the specific work product of Fugleberg Koch is prohibited by law.

ELECTRICAL SPECIFICATIONS

I. GENERAL REQUIREMENTS:

A. DO ALL WORK IN COMPLIANCE WITH THE LATEST ADOPTED EDITION OF THE INTERNATIONAL BUILDING CODE (IBC-2020), NFPA 70 (NEC-2017) AND NFPA 101 (LIFE SAFETY CODE-2015), AND THE REGULATIONS OF THE LOCAL UTILITY TELEPHONE, CABLE TELEVISION AND POWER UTILITY COMPANIES. OBTAIN AND PAY FOR ANY AND ALL REQUIRED PERMITS, INSPECTIONS, CERTIFICATES OF INSPECTIONS AND APPROVAL, AND THE LIKE, AND DELIVER SUCH CERTIFICATES TO THE ENGINEER.

B. THE CONTRACTOR SHALL FURNISH, PERFORM, OR OTHERWISE PROVIDE ALL LABOR (INCLUDING, BUT NOT LIMITED TO, ALL PLANNING, PURCHASING, PAINTING, TRANSPORTING, RIGGING, HOISTING, STORING, INSTALLING, TESTING, CHASING, CHANNELING, CUTTING, TRENCHING, EXCAVATING AND BACKFILLING), COORDINATION, FIELD VERIFICATION, EQUIPMENT INSTALLATION, SUPPORT, AND SAFETY, SUPPLIES, AND MATERIALS NECESSARY FOR THE CORRECT INSTALLATION OF COMPLETE AND FUNCTIONAL ELECTRICAL SYSTEMS (AS DESCRIBED OR IMPLIED BY THESE SPECIFICATIONS AND THE APPLICABLE DRAWINGS).

C. ALL DRAWINGS AND SPECIFICATIONS ON THE PROJECT ARE COMPLEMENTARY, EACH TO ALL OTHER SETS, AND THEY SHALL BE USED IN COMBINATION FOR THE EXECUTION OF THIS WORK. DIVISION 16 WORK SHOWN ON ANY ONE SET OF DRAWINGS, INCLUDING ALL ARCHITECTURAL DRAWINGS, MECHANICAL, PLUMBING AND FIRE PROTECTION DRAWINGS FOR GENERAL WORK AND EQUIPMENT, AND DIVISION 16 WORK CALLED FOR UNDER ANY SECTION OF THE PROJECT SPECIFICATIONS, SHALL BE CONSIDERED AS INCLUDED IN THIS WORK UNLESS SPECIFICALLY EXCLUDED BY INCLUSION IN SOME OTHER BRANCH OF THE WORK. THIS SHALL INCLUDE ROUGHING-IN FOR CONNECTIONS AND EQUIPMENT AS CALLED FOR OR INFERRED. THE CONTRACTOR SHALL CHECK ALL DRAWINGS AND SPECIFICATIONS FOR THE PROJECT AND SHALL BE RESPONSIBLE FOR THE INSTALLATION OF ALL DIVISION 16 WORK.

D. THE CONTRACTOR SHALL CAREFULLY CHECK THE DRAWINGS AND SPECIFICATIONS OF ALL OTHER TRADES AND DIVISIONS BEFORE INSTALLING ANY OF HIS WORK. HE SHALL IN ALL CASES CONSIDER THE WORK OF ALL OTHER TRADES, AND SHALL COORDINATE HIS WORK WITH THEM SO THAT THE BEST ARRANGEMENTS OF ALL EQUIPMENT, PIPING, CONDUIT, DUCTS, ROUGH-IN, ETC., CAN BE OBTAINED.

E. LOCATIONS DESIGNATED FOR OUTLETS, SWITCHES, DEVICES, EQUIPMENT, ETC., ARE APPROXIMATE AND FINAL LOCATIONS SHALL BE VERIFIED IN THE FIELD. CONTRACTOR SHALL LOCATE ALL DEVICES UP TO 5 FEET IN ANY DIRECTION AS DIRECTED BY OWNER AND PER CODE. WHERE INSTRUCTIONS OR NOTES ARE INSUFFICIENT TO CONVEY THE INTENT OF THE DESIGN, CONSULT THE OWNER PRIOR TO BIDDING AND INSTALLATION.

F. CONTRACTOR SHALL BE RESPONSIBLE FOR VERIFYING AND COORDINATING THE LOCATIONS OF DEVICES TO BE USED AND COORDINATING THE FINAL LOCATIONS OF ELECTRICAL EQUIPMENT WITH MILLWORK, SINKS, BENCHES, COUNTERS AND SHELVING PRIOR TO BIDDING AND INSTALLATION. ALL DISCREPANCIES SHALL BE BROUGHT TO THE ATTENTION OF THE OWNER.

G. DIVISION 16 CONTRACTOR SHALL HAVE HAD EXPERIENCE OF AT LEAST THE SAME SIZE AND SCOPE AS THIS PROJECT, ON AT LEAST TWO OTHER PROJECTS WITHIN THE LAST FIVE YEARS IN ORDER TO BE QUALIFIED TO BID THIS PROJECT.

H. CONTRACTOR SHALL AND DOES HEREBY WARRANT ALL MATERIALS AND EQUIPMENT FURNISHED UNDER THIS SECTION OF THE SPECIFICATIONS TO BE FREE FROM DEFECTS AND TO FUNCTION OR OPERATE SATISFACTORILY FOR ONE YEAR AFTER FINAL ACCEPTANCE OF THE WORK, AND THAT ANY ITEMS NOT MEETING THIS REQUIREMENT WILL BE MADE GOOD BY HIM WITHOUT COST TO OWNER, PROVIDED SUCH DEFECTS OR FAILURES ARE NOT DUE TO ABUSE, NEGLECT, OR LACK OF REASONABLE AND ORDINARY MAINTENANCE.

I. ALL WORK SHALL BE EXECUTED IN A WORKMANSHIP MANNER DISPLAYING A NEAT MECHANICAL APPEARANCE UPON COMPLETION.

J. BALANCE TOTAL PHASE LOADS IN EACH ELECTRICAL PANEL TO A VALUE WITHIN 10% OF EACH OTHER.

K. THE CONTRACTOR SHALL PROVIDE ADEQUATE PROTECTION, WHEREVER WORK IS TO BE PERFORMED IN FINISHED/OCCUPIED SPACES, TO PREVENT DAMAGE TO ADJACENT AREAS, EQUIPMENT, OR FURNISHINGS; TO PREVENT ACCIDENTAL INJURY TO BUILDING OCCUPANTS AND THE PUBLIC; TO PREVENT THE SPREADING OF DUST, DIRT, DEBRIS, AND MOISTURE FROM THE AREA WHERE WORK IS BEING PERFORMED; AND TO PREVENT DUST, DIRT, DEBRIS, AND MOISTURE FROM GETTING ON OR IN THE BUILDING OCCUPANT'S FURNISHINGS OR EQUIPMENT.

L. THE CONTRACTOR SHALL REPAIR, AT NO COST TO THE OWNER, ANY DAMAGE DONE BY HIMSELF OR HIS EMPLOYEES. HE SHALL ALSO BE RESPONSIBLE FOR ALL CUTTING AND PATCHING REQUIRED TO PROPERLY INSTALL HIS WORK. THIS SHALL ALSO INCLUDE THE PATCHING OF EXISTING ROADWAYS (PAVED OR IMPROVED), PARKING AREAS, SIDEWALKS, WALLS, STAIRS, MECHANICAL WORK, CURBS, GUTTERS, ETC., CUT TO INSTALL WORK PROVIDED BY THE CONTRACTOR. PATCH WORK SHALL COMPLY WITH THE APPLICABLE SECTIONS OF THESE SPECIFICATIONS AND SHALL MATCH THE EXISTING FINISHES.

M. UPON COMPLETION OF WORK, THE ENTIRE WIRING SYSTEM SHALL BE TESTED, AND SHALL BE SHOWN TO BE IN PROPER WORKING CONDITION IN ACCORDANCE WITH INTENT OF SPECIFICATIONS AND DRAWINGS. IT SHALL BE THE RESPONSIBILITY OF THE CONTRACTOR TO HAVE ALL SYSTEMS READY FOR OPERATION AND TO HAVE AN ELECTRICIAN AVAILABLE TO OPERATE SAME IN ACCORDANCE WITH AND UNDER THE SUPERVISION OF THE INSPECTION REPRESENTATIVE OF THE ENGINEER. THE CONTRACTOR SHALL BE AVAILABLE TO ASSIST IN REMOVAL OF PANEL FRONTS, ETC., TO PERMIT INSPECTION AS REQUIRED.

N. IN ACCORDANCE WITH DIVISION 1 AND THE CONDITIONS OF THE CONTRACT, THE CONTRACTOR SHALL PROVIDE AND KEEP UP TO DATE A COMPLETE RECORD SET OF CONSTRUCTION "AS-BUILTS" BLUELINE PRINTS WHICH SHALL BE CORRECTED DAILY, AND SHALL SHOW EVERY CHANGE FROM THE ORIGINAL CONTRACT DRAWINGS, INCLUDING ADDENDA AND CHANGE ORDERS IN ACCORDANCE WITH GENERAL REQUIREMENTS AND SPECIAL CONDITIONS. THIS SET OF PRINTS SHALL BE KEPT ON THE JOB SITE, AND SHALL BE USED ONLY AS A RECORD SET. THIS SHALL NOT BE CONSTRUED AS AUTHORIZATION FOR THE CONTRACTORS TO MAKE CHANGES IN THE LAYOUT WITHOUT DEFINITE INSTRUCTION IN EACH CASE.

II. ELECTRICAL SCOPE:

A. FURNISHING AND INSTALLATION OF POWER SYSTEMS, AND AUXILIARY SYSTEMS AS SHOWN OR HEREIN SPECIFIED.

B. CONNECTION OF ALL EQUIPMENT REQUIRING ELECTRICAL CONNECTION, MENTIONED IN THIS DIVISION OR SHOWN ON DRAWINGS, WHETHER FURNISHED BY DIVISION 16 OR UNDER OTHER DIVISIONS, OR FURNISHED BY OWNER.

C. FURNISHING AND INSTALLATION OF OUTLET BOXES, CONDUIT RACEWAYS, FOR A TELEPHONE AND DATA RACEWAY DISTRIBUTION SYSTEM. (TELEPHONE AND DATA HARDWARE, AS WELL AS WIRING AND SOFTWARE IS NOT INCLUDED.)

D. THE CONTRACTOR SHALL BE FULLY RESPONSIBLE FOR CONTACTING THE OFFICES OF ALL LOCAL AND/OR STATE AUTHORITIES HAVING JURISDICTION OVER THIS PROJECT IN ORDER TO SCHEDULE ALL REQUIRED INSPECTIONS AND OBTAIN ALL NECESSARY PERMITS, ETC. THE CONTRACTOR SHALL NOTIFY THE ARCHITECT/ENGINEER OF ALL SCHEDULED INSPECTIONS AT LEAST TWO WEEKS IN ADVANCE OF THE SCHEDULED DATE.

E. THE CONTRACTOR SHALL REPLACE ANY DEFECTIVE MATERIALS, EQUIPMENT, OR WORKMANSHIP WITHOUT COST TO THE OWNER WITHIN THE STIPULATED GUARANTEED PERIOD.

F. IT SHALL BE THE RESPONSIBILITY OF THE DIVISION 16 CONTRACTOR TO HAVE ALL SYSTEMS READY FOR OPERATION AND TO HAVE AN ELECTRICIAN AVAILABLE FOR ALL INSPECTIONS. THE CONTRACTOR SHALL PROVIDE PERSONNEL TO ASSIST IN REMOVAL OF PANEL FRONTS, ETC. TO PERMIT INSPECTION AS REQUIRED.

G. SUBMIT TO THE ARCHITECT/ENGINEER PROMPTLY AFTER AWARD OF CONTRACT AND PRIOR TO PURCHASING, SIX COPIES OF MANUFACTURER'S SHOP DRAWINGS IN ACCORDANCE WITH DIVISION 1, SECTION 01300 - SUBMITTALS FOR THE FOLLOWING ITEMS. ALL SHOP DRAWINGS OF A SPECIFIC ITEM OR SYSTEM SHALL BE MADE IN ONE SUBMITTAL AND WITHIN TEN DAYS AFTER AWARD OF CONTRACT.

1. PANELBOARDS
2. SUPPORTS
3. WIRING DEVICES
4. DISCONNECT SWITCHES
5. CONDUIT
6. WIRE

H. COMPLETED WIRING SYSTEMS SHALL BE FREE FROM SHORT CIRCUITS AND AFTER COMPLETION, PERFORM TESTS FOR INSULATION RESISTANCE IN ACCORDANCE WITH THE REQUIREMENTS OF THE NATIONAL ELECTRICAL CODE. ALL WIRING SYSTEMS SHALL BE COMPLETELY AND TOTALLY "SAFED" DURING CONSTRUCTION. ONLY QUALIFIED PERSONNEL SHALL HANDLE ELECTRICAL SYSTEMS.

I. BEFORE ROUGH-IN OF CIRCUITRY OR CONNECTING TO EQUIPMENT, FURNISHED UNDER THIS DIVISION, ANY OTHER DIVISION, OR BY THE OWNER, THE CONTRACTOR SHALL VERIFY THE ELECTRICAL CHARACTERISTICS AND REQUIREMENTS OF THE EQUIPMENT BEING FURNISHED AND FOR THAT SPECIFIED AND SHOWN ON THE DRAWINGS AND PROVIDE FOR PROPER ROUGH-IN AND CONNECTION.

J. THE ELECTRICAL CIRCUITS, COMPONENTS, AND CONTROLS FOR ALL EQUIPMENT ARE SELECTED AND SIZED, BASED ON THE EQUIPMENT SPECIFIED. IF SUBSTITUTIONS AND/OR EQUIVALENT EQUIPMENT ARE FURNISHED, IT SHALL BE THE RESPONSIBILITY OF ALL PARTIES CONCERNED, INVOLVED IN, AND FURNISHING THE SUBSTITUTE AND/OR EQUIVALENT EQUIPMENT TO VERIFY AND COMPARE THE ELECTRICAL CHARACTERISTICS AND REQUIREMENTS OF THAT FURNISHED TO THAT SPECIFIED AND/OR SHOWN. IF GREATER CAPACITY OR MORE MATERIALS OR LABOR IS REQUIRED FOR THE ROUGH-IN, CIRCUITRY OR CONNECTIONS THAN FOR THE ITEM SPECIFIED AND PROVIDED FOR, THEN IT SHALL BE THE RESPONSIBILITY OF THE PARTIES INVOLVED IN PROVIDING THE SUBSTITUTE AND/OR EQUIVALENT ITEMS OF EQUIPMENT TO PROVIDE ALL COMPENSATION FOR ADDITIONAL CHARGES MADE FOR THE PROPER ROUGH-IN, CIRCUITRY AND CONNECTIONS FOR THE EQUIPMENT FURNISHED. NO ADDITIONAL CHARGES ABOVE THE BASE BID SHALL BE ALLOWED FOR SUCH REVISIONS.

K. EXCAVATION FOR UNDERGROUND ELECTRICAL STRUCTURES: CONFORM TO ELEVATIONS AND DIMENSIONS SHOWN WITHIN A TOLERANCE OF PLUS OR MINUS 0.10'; PLUS A SUFFICIENT DISTANCE TO PERMIT PLACING AND REMOVAL OF CONCRETE FORMWORK, INSTALLATION OF SERVICES, OTHER CONSTRUCTION, AND FOR INSPECTION.

L. TRENCHING: EXCAVATE TRENCHES FOR ELECTRICAL INSTALLATIONS AS FOLLOWS:

1. EXCAVATE TRENCHES TO THE UNIFORM WIDTH, SUFFICIENTLY WIDE TO PROVIDE AMPLE WORKING ROOM AND A MINIMUM OF 6" TO 9" CLEARANCE ON BOTH SIDES OF RACEWAYS AND EQUIPMENT.
2. EXCAVATE TRENCHES TO DEPTH INDICATED OR REQUIRED.
3. LIMIT THE LENGTH OF OPEN TRENCH TO THAT IN WHICH INSTALLATIONS CAN BE MADE AND THE TRENCH BACKFILLED WITHIN THE SAME DAY.
4. WHERE ROCK IS ENCOUNTERED, CARRY EXCAVATION BELOW REQUIRED ELEVATION AND BACKFILL WITH A LAYER OF CRUSHED STONE OR GRAVEL PRIOR TO INSTALLATION OF RACEWAYS AND EQUIPMENT. PROVIDE A MINIMUM OF 6" OF STONE OR GRAVEL CUSHION BETWEEN ROCK BEARING SURFACE AND ELECTRICAL INSTALLATIONS.

M. THE CONTRACTOR SHALL PROVIDE ALL INSERTS FOR THE SUPPORT OF DIVISION 16 EQUIPMENT TO BE PLACED IN CONCRETE OR THROUGH CONCRETE SLABS AS CONSTRUCTION PROGRESSES. HE SHALL PROVIDE ALL MISCELLANEOUS HANGING AND SUPPORTING HARDWARE. ALL ELECTRICAL WORK IS TO BE CONCEALED IN OR BUILT INTO GENERAL CONSTRUCTION SHALL BE PLACED AS CONSTRUCTION PROGRESSES. FAILURE OF THE CONTRACTOR TO COORDINATE WORK WITH OTHER TRADES AND THE PROJECT CONSTRUCTION PROGRESS SHALL MAKE HIM RESPONSIBLE FOR ALL COST OF CUTTING AND PATCHING, AS REQUIRED TO INSTALL WORK. NO STRUCTURAL MEMBER, MASONRY CONSTRUCTION OR FINISHED WORK SHALL BE CUT OR ALTERED WITHOUT PRIOR WRITTEN APPROVAL BY THE ARCHITECT/ENGINEER. CONTRACTOR SHALL FIRE RATE ALL PENETRATIONS THROUGH ALL FIRE RATED SLABS OR WALLS PER THE INTENDED RATING.

N. THE CONTRACTOR SHALL SUPPLY AND SET INTO PLACE ALL WALL SLEEVES FOR CONDUITS AND CEILING INSERTS FOR HANGERS IN AREAS OF NEW CONSTRUCTION AS BUILDING CONSTRUCTION PROGRESSES. INSTALL EQUIPMENT NOTED TO BE CONCEALED IN WALLS BEFORE WALLS ARE CONSTRUCTED IN ORDER THAT WALLS MAY BE CONSTRUCTED AROUND CONDUITS, ENCLOSURES, ETC.

O. METALLIC MATERIALS SHALL BE PROTECTED AGAINST CORROSION. EQUIPMENT ENCLOSURES SHALL BE GIVEN RUST-INHIBITING TREATMENT AND STANDARD FINISH BY MANUFACTURER. ALUMINUM SHALL NOT BE USED ON CONTACT WITH EARTH, AND, WHERE CONNECTED TO DISSIMILAR METAL, SHALL BE PROTECTED BY SUITABLE FITTINGS AND TREATMENT. ALL FERROUS METALS SUCH AS ANCHORS, BOLTS, BRACES, BOXES, BODIES, CLAMPS, FITTINGS, GUARDS, NUTS, PINS, RODS, SHIMS, THIMBLES, WASHERS, AND MISCELLANEOUS PARTS, NOT OF STAINLESS STEEL OR NONFERROUS MATERIALS, SHALL BE HOT-DIPPED GALVANIZED.

P. ALL CONDUITS STUBBED OUT FOR FUTURE USE SHALL HAVE A PULL WIRE INSTALLED, A PLASTIC CAP INSTALLED AND BE IDENTIFIED AS TO THE CONDUIT ORIGIN.

Q. THE RESPONSIBILITY FOR ANY CUTTING OF CONSTRUCTION WHICH IS REQUIRED FOR THE INSTALLATION OF DIVISION 16 WORK, SHALL BE BY THE CONTRACTOR. THE CONTRACTOR SHALL COORDINATE WITH ALL OTHER TRADES AND THE OWNER BEFORE ANY CUTTING AND OBTAIN APPROVAL FROM THE ARCHITECT/ENGINEER PRIOR TO ANY CUTTING. ALL PATCHING AND FINISHING SHALL BE BY THE CONTRACTOR.

R. WHERE OPENINGS OR HOLES ARE CUT IN CONSTRUCTION AND THE CUTTING BREAKS ELECTRICAL CIRCUITRY OR CONTROL CIRCUITRY CONDUIT AND WIRING, THEN IT SHALL BE THE RESPONSIBILITY OF THE CONTRACTOR TO REROUTE THE CIRCUITRY CONDUIT AND REWIRING AND TO COMPLETE THE CIRCUITRY AS REQUIRED AND AS APPROVED BY THE ARCHITECT/ENGINEER. TEMPORARY COMPLETION SHALL BE PROVIDED WHERE NECESSARY BEFORE THE PERMANENT REROUTING AND COMPLETION WORK IS FINISHED.

S. ANY PENETRATIONS OF FIRE OR SMOKE RATED ASSEMBLIES MADE BY THIS CONTRACTOR IN VERTICAL OR HORIZONTAL CONSTRUCTION SHALL BE SEALED AND PROTECTED BY THIS CONTRACTOR IN ORDER TO MAINTAIN THE ESTABLISHED FIRE RATING WITH METHODS AS APPROVED BY THE AUTHORITY HAVING JURISDICTION.

III. IDENTIFICATION:

A. IDENTIFICATION NAMEPLATES SHALL BE LAMINATED PLASTIC, SECURED TO EQUIPMENT WITH TWO SCREWS.

B. EACH PANELBOARD AND SWITCHBOARD SHALL BE EQUIPPED WITH A PERMANENT PLASTIC NAMEPLATE WITH 1/2" MINIMUM LETTERS, SECURELY FASTENED TO THE DEVICE.

C. EACH INDIVIDUALLY MOUNTED CIRCUIT BREAKER, SWITCH, TRANSFER SWITCH, MOTOR STARTER, LIGHTING CONTACTOR, TRANSFORMER AND/OR ANY OTHER CONTROL OR PROTECTIVE DEVICE INCLUDING EQUIPMENT DISCONNECT SWITCHES SHALL BE EQUIPPED WITH A PERMANENT PLASTIC NAMEPLATE WITH 1/2" MINIMUM LETTERS.

D. PANELBOARDS SHALL HAVE TYPEWRITTEN DIRECTORIES. ALL CIRCUITS TO BE IDENTIFIED BY DEVICES SERVED AND ROOM NUMBERS (I.E., LIGHTING ROOM 216). HANDWRITTEN DIRECTORIES WILL NOT BE ALLOWED.

E. EACH JUNCTION BOX CABINET OR WIREWAY LARGER THAN 6" X 6" SHALL BE EQUIPPED WITH A PLASTIC NAMEPLATE WITH 1/2" MINIMUM LETTERS INDICATING THE SYSTEM ENCLOSED.

F. ALL SYSTEMS JUNCTION BOXES AND CONDUIT SHALL BE COLOR CODED INSIDE AND OUTSIDE OF THE BOX PRIOR TO THE INSTALLATION OF CONDUCTORS PER THE FOLLOWING:

1. CCTV SYSTEM: GREEN
2. TELEPHONE DATA SYSTEM: BLUE
3. FIRE ALARM SYSTEM: RED

G. ENTIRE BOX INSIDE AND OUT, INCLUDING COVER, SHALL BE PAINTED PRIOR TO INSTALLING CONDUCTORS.

IV. WIRING DEVICES:

A. SWITCHES AND RECEPTACLES IN LOBBIES, CORRIDORS OR COMMERCIAL SPACES, UNFINISHED AND MECHANICAL SPACES SHALL BE 20 AMP COMMERCIAL GRADE 125 VAC. GRAY IN COLOR WITH STAINLESS STEEL COVERPLATES.

B. WEATHERPROOF RECEPTACLES SHALL BE GFCI TYPES WITH GASKETED STAINLESS STEEL KEY LOCKABLE FLIP COVER TYPE COVERPLATES. SURGE SUPPRESSION TYPE OUTLETS IN MDFS AND IDFS SHALL BE HUBBELL #83625 (BLUE) OR EQUAL.

C. RECEPTACLES PROVIDED FOR ATTACHMENT OF CORD AND PLUG EQUIPMENT SHALL BE HEAVY DUTY, SPECIFICATION GRADE, NON-INTERCHANGEABLE, FLUSH MOUNTED TYPES OF THE PROPER NEMA CONFIGURATION TO SERVE THE EQUIPMENT. NEMA CONFIGURATIONS SHALL BE VERIFIED PRIOR TO INSTALLATION OF CIRCUIT CONDUCTORS. CONTRACTOR TO PROVIDE ALL CONNECTION, WIRING, PIGTAILS FOR DISHWASHERS, COOKING RANGES, OVENS AND GARBAGE DISPOSALS.

D. ALL DEVICES SHALL HAVE PROPER PLATES, CARPET FLANGES, TRIMS, RINGS, ESCUTCHEONS, ETC., AS MANUFACTURED BY SAME MANUFACTURER AS DEVICES. ANY TELEPHONE OR OTHER OUTLET WHICH IS NOT EQUIPPED WITH A PLATE FURNISHED BY OTHERS SHALL HAVE ONE PROVIDED BY THIS CONTRACTOR. DEVICE PLATES SHALL BE COLOR AND TYPE AS SHOWN BELOW.

1. FINISHED SPACES DECORA LINE:
   a. COORDINATE EXACT COLOR WITH OWNER/ARCHITECT.
2. UNFINISHED OR INDUSTRIAL OR COMMERCIAL TYPE SPACES:
   a. GRAY DEVICES
   b. STAINLESS STEEL OR STAMPED GALVANIZED STEEL ON SURFACE MOUNTED BOXES
   c. STAINLESS STEEL PLATES ON FLUSH MOUNTED BOXES

F. MOUNTING HEIGHTS ARE APPROXIMATE. THE EXACT LOCATIONS AND MOUNTING HEIGHTS SHALL BE DETERMINED ON THE JOB AND IT SHALL BE THE CONTRACTOR'S RESPONSIBILITY TO COORDINATE WITH ALL TRADES TO INSURE CORRECT INSTALLATION, I.E., OVER COUNTERS IN OR ABOVE BACK-SPLASHES, IN BLOCK WALLS, TILE, AND OTHER SPECIFIC CONSTRUCTION FEATURES. LOCATION OF OUTLETS MOUNTED IN BUILT-INS, MILLWORK, AND CABINETRY SHALL BE VERIFIED. OUTLETS MOUNTED IN KICK OR TOE SPACES SHALL BE MOUNTED HORIZONTALLY. OUTLET BOXES SHALL BE MOUNTED TO PREVENT DEVICE PLATE FROM OVERLAPPING BACKSPLASH, TRIM, TILE, ETC. LOCATE SO DEVICE PLATE WILL LAY FLAT AGAINST SURFACE COMPLETELY AROUND THE PERIMETER OF PLATE.

G. OUTLETS, OTHER THAN THOSE COORDINATED WITH COUNTER TOPS, SHELVES, AND CABINETS, SHALL BE LOCATED WITH THE CENTER LINE OF OUTLET BOXES THE FOLLOWING DISTANCE ABOVE THE FINISHED FLOOR, UNLESS OTHERWISE INDICATED:

1. RECEPTACLES, GENERAL: 1'-6" AFF
2. TELEPHONE OUTLETS: 1'-6" AFF
3. SWITCHES, GENERAL: 4'-0" AFF

V. RACEWAYS

A. SHALL BE GALVANIZED OUTSIDE AND INSIDE BY HOT DIPPING. E.M.T. SHALL BE ELECTRO-GALVANIZED. CONDUITS SHALL BE AS MANUFACTURED BY REPUBLIC, PITTSBURGH STANDARD, WHEATLAND, TRIANGLE, ALLIED, OR YOUNGSTOWN.

B. SHALL BE STANDARD THREADED TYPE, GALVANIZED OUTSIDE AND INSIDE BY HOT DIPPING. THREADLESS AND CLAMP TYPE NOT ACCEPTABLE. SHALL BE AS MANUFACTURED BY RACO, EFCOR, OR APPLETON.

C. SHALL BE STEEL THREADED COMPRESSION TYPE. ALL COUPLINGS AND CONNECTORS SHALL BE EFCOR OR RACO. PRESSURE INDENTED TYPE CONNECTORS OR CAST METAL WILL NOT BE APPROVED FOR ANY LOCATION.

D. CONNECTORS SHALL HAVE PLASTIC INSULATED THROAT INSERTS.

E. THE USE OF METAL CLAD CABLE IS ACCEPTABLE IN LOCATIONS AS ACCEPTED BY THE NEC AND ALL LOCAL JURISDICTIONAL CODES.

F. STEEL METAL CLAD CABLE, TYPE MC, EMPLOYING CIRCUIT CONDUCTORS #12 SOLID TO #2 AWG, SOLID OR STRANDED COPPER WITH THHN INSULATION, AN INSULATED GREEN GROUNDING CONDUCTOR AND GALVANIZED STEEL INTERLOCKED ARMOR CLADDING. THE CABLES SHALL BE SUITABLE FOR USE IN DRY LOCATIONS AT TEMPERATURES NOT EXCEEDING 90° C ON AD CIRCUITS UP TO 600 VOLTS IN ACCORDANCE WITH N.E.C., ARTICLE 330. THE CABLE SHALL BE ONE AND TWO HOUR FIRE RATED PER ANSI/UL 1479 FOR USE IN WALL, CEILING AND FLOOR ASSEMBLIES.

G. FLEXIBLE METALLIC CONDUIT RACEWAYS MAY BE USED TO CONNECT HVAC UNITS LOCATED IN INTERIOR MECHANICAL AREAS. MINIMUM SIZE 3/4".

H. CONDUIT SHALL BE SIZED IN ACCORDANCE WITH THE LATEST NATIONAL ELECTRICAL CODE EXCEPT THAT NO CONDUIT SHALL BE SMALLER THAN 3/4" UNLESS OTHERWISE NOTED. CONDUIT SHALL BE SIZED LARGER THAN REQUIRED ABOVE WHEN SO SHOWN ON THE DRAWINGS OR WHEN REQUIRED BY LOCAL CODE.

I. ANY CONDUIT STUBBED OUT FOR FUTURE SHALL BE CAPPED WITH A PLASTIC CAP AND MARKED WITH A 2" MINIMUM RED METAL TAG WHICH IDENTIFIES CONDUIT ORIGIN. CONDUITS STUBBED UP ABOVE GRADE OR ROOF SHALL BE TAGGED ON THE CONDUIT. CONDUIT STUBBED OUT BELOW GRADE SHALL BE TAGGED ON NEAREST BUILDING WALL, CURB, ETC., DIRECTLY OVER THE CONDUIT RUN. ALL EMPTY CONDUITS SHALL HAVE PULL WIRES.

VI. SCHEDULE 40 RIGID PVC:

A. CONDUIT SHALL BE COMPOSED OF POLYVINYLCHLORIDE AND SHALL BE UL RATED TYPE 40 FOR USE WITH 90EC RATED CONDUCTORS. CONDUIT SHALL CONFORM TO NEMA STANDARDS AND APPLICABLE SECTIONS OF NEC.

B. INSTALLATION OF RIGID NON-METALLIC CONDUIT SHALL COMPLY WITH ARTICLE 352 OF THE NATIONAL ELECTRICAL CODE (NFPA 70) AND THESE SPECIFICATIONS.

C. PROVIDE A CONTINUOUS, INSULATED, GROUNDING CONDUCTOR IN EVERY RIGID, NON-METALLIC RACEWAY EVEN IF NOT SHOWN ON THE DRAWINGS. THE GROUNDING CONDUCTOR SHALL BE CONNECTED TO GROUND AT EACH END OF THE RACEWAY IN ACCORDANCE WITH ARTICLE 250 OF THE NATIONAL ELECTRICAL CODE (NFPA 70).

D. WHERE RIGID NON-METALLIC CONDUIT TRANSITIONS TO METALLIC CONDUIT, THE LOCATION OF THE TRANSITION SHALL BE UNDERGROUND.

E. NO PVC CONDUIT SHALL BE RUN EXPOSED, OR ABOVE GRADE.

VII. WIRE AND CABLE 600 VOLT:

A. CONDUCTORS SHALL HAVE CURRENT CARRYING CAPACITIES AS PER NEC AND WITH 600 VOLT INSULATION, #12 AVERAGE MINIMUM FOR 20 AMP CIRCUITS AND #14 FOR 15 AMP CIRCUITS EXCEPT FOR CONTROLS, AND FIXTURE WIRE. CONDUCTORS SHALL BE COPPER.

B. #12 AND #10 SHALL BE SOLID, TYPE THW/THWN INSULATION.

C. #8 AND LARGER, AND ANY SIZE TO MOTORS SHALL BE STRANDED TYPE THW.

D. SHALL BE MADE WITH T & B STA-KON WIRE JOINTS, PT SERIES, COMPLETE WITH INSULATING CAPS AND INSTALLED WITH WT161 TOOL OR WT2000 TOOL, IDEAL SUPER-NUTS (NOT WIRE NUTS), IDEAL WING NUTS, OR BUCHANAN ELEC. PRODUCTS B CAP OR SERIES 2000 PRESSURE CONNECTORS COMPLETE WITH NYLON SNAP-ON INSULATORS AND INSTALLED WITH C24 PRESSURE TOOL.

E. ALL JOINTS AND SPLICES IN WIRE SHALL BE MADE WITH APPROVED SOLDERLESS CONNECTORS, AND COVERED SO THAT INSULATION IS OWNER APPROVED EQUAL TO CONDUCTOR INSULATION. SPLICES SHALL NOT BE PERMITTED IN CONTROL, SECURITY, FIRE ALARM, TELEVISION OR COMMUNICATIONS SYSTEMS, OR WHERE OTHERWISE NOTED. SPLICING OF WIRE OR CABLES WILL NOT BE ALLOWED BELOW GRADE, INCLUDING IN BOXES BELOW GRADE.

F. BOTH CONDUCTORS AND CONDUITS SHALL BE CONTINUOUS FROM OUTLET TO OUTLET.

G. IN INSTALLING THE MAIN ELECTRICAL SERVICE, ADDITIONAL SLACK CONDUCTORS SHALL BE PROVIDED AND TERMINATED AS REQUIRED BY ELECTRIC UTILITY FOR CONNECTION TO THEIR EQUIPMENT. FIELD COORDINATE WITH UTILITY PRIOR TO INSTALLING CONDUCTORS.

H. IN INSTALLING PARALLEL CONDUCTORS IT IS MANDATORY THAT ALL CONDUCTORS MAKING UP THE FEEDER BE EXACTLY THE SAME LENGTH, THE SAME SIZE AND THE SAME TYPE OF CONDUCTOR WITH THE SAME INSULATION. FURTHER, EACH GROUP OF CONDUCTORS MAKING UP A PHASE OR NEUTRAL MUST BE BONDED AT BOTH ENDS IN AN APPROVED MANNER.

I. CONDUCTOR SIZES INDICATED ON CIRCUIT HOMERUNS OR IN PANELBOARD SCHEDULES SHALL BE INSTALLED OVER THE ENTIRE LENGTH OF THE CIRCUIT UNLESS NOTED OTHERWISE ON THE DRAWINGS.

J. CONDUCTORS SHALL BE CONTINUOUS AND UNSPLICED WHERE INSTALLED IN CONDUIT. SPLICES SHALL OCCUR ONLY WITHIN WIRING TROUGHS, WIREWAYS, JUNCTION BOXES, OUTLET BOXES, OR EQUIPMENT ENCLOSURES WHERE SUFFICIENT ADDITIONAL ROOM IS PROVIDED FOR ALL SPLICES.

K. EACH BRANCH CIRCUIT AND FEEDER CONDUCTOR SHALL BE COLOR CODED. FOR CONDUCTOR SIZES THRU NO. 6 AWG, THE INSULATION SHALL BE OF THE COLOR AS INDICATED BELOW. COLOR CODE SHALL BE STRICTLY ADHERED TO. FOR CONDUCTOR SIZES NO. 4 AWG AND LARGER, COLOR CODED PHASE TAPE MAY BE APPLIED COMPLETELY AROUND THE CONDUCTOR INSULATION WITHIN 8" OF EACH END OF THE CONDUCTOR AND IN EACH PULL OR JUNCTION BOX OR WHENEVER CONDUCTORS ARE PHYSICALLY EXPOSED TO VIEW. GROUNDING CONDUCTORS AND GROUNDED CONDUCTORS SHALL HAVE INSULATION COLOR AS INDICATED FOR SIZES THROUGH #6 AWG. 120/208 V, 3PHASE,4W

PHASE A, COLOR: BLACK
PHASE B, COLOR: RED
PHASE C, COLOR: BLUE
NEUTRAL, COLOR: WHITE
GROUND, COLOR: GREEN

VIII. GROUNDING:

A. THIS SECTION DEALS WITH THE GROUNDING OF SERVICE EQUIPMENT, TRANSFORMERS, NON-CURRENT CARRYING CONDUCTIVE SURFACES OF EQUIPMENT, METAL BUILDING, STRUCTURES AND OTHER EQUIPMENT.

B. ALL GROUNDING CONNECTIONS SHALL BE INSTALLED IN ACCORDANCE WITH THE NATIONAL ELECTRICAL CODE AND ALL LOCAL CODES AND REQUIREMENTS. SUCH CODES SHALL BE CONSIDERED MINIMUM REQUIREMENTS AND THE INSTALLATION OF THE GROUNDING SYSTEM SHALL INSURE FREEDOM FROM DANGEROUS SHOCK EXPOSURE AND SHALL PROVIDE A LOW IMPEDANCE GROUND FAULT PATH TO PERMIT OPERATION OF OVERCURRENT AND GROUND FAULT PROTECTIVE DEVICES.

C. ALL SERVICE AND EQUIPMENT GROUNDING CONDUCTORS, AND BONDING JUMPERS SHALL BE INSULATED COPPER, TYPE THHN, THWN, OR THW CONDUCTORS (UNLESS NOTED OTHERWISE) AND SHALL BE SIZED IN ACCORDANCE WITH THE APPLICABLE PORTIONS OF ARTICLES 250 AND 517 OF THE NATIONAL ELECTRICAL CODE. GROUNDING CONDUCTORS #6 AWG AND SMALLER SHALL HAVE A GREEN COLOR INSULATION. ALL GROUNDING CONDUCTORS #4 AWG AND LARGER SHALL BE ADEQUATELY IDENTIFIED WITH A GREEN TRACER AND/OR GREEN COLORED TAPE AT EACH END OF THE GROUNDING CONDUCTOR AND AT EACH PULLBOX OR OTHER ACCESSIBLE LOCATION.

D. THE MAIN SERVICE GROUNDING ELECTRODE SYSTEM SHALL CONSIST OF THE FOLLOWING ITEMS BONDED TOGETHER BY THE GROUNDING ELECTRODE CONDUCTORS IN ACCORDANCE WITH NEC ARTICLE 250, PART H:

1. THE MAIN UNDERGROUND COLD WATER PIPE, IF METAL, NEC 250- 81(A)
2. METAL FRAME OF BUILDING WHERE AVAILABLE, NEC 250-81(B)
3. CONCRETE ENCASED ELECTRODE, NEC 250-81(C)
4. THE BUILDING LIGHTNING PROTECTION SYSTEM.

E. THE NEUTRAL CONDUCTOR SHALL BE GROUNDED AT THE SERVICE ENTRANCE MAIN DISCONNECT, AND AT EACH SEPARATELY DERIVED SYSTEM ONLY PER NEC ARTICLE 250.

F. A #6 (MINIMUM) INSULATED COPPER CONDUCTOR INSTALLED IN 3/4" CONCEALED CONDUIT SHALL BE CONNECTED FROM THE BUILDING GROUNDING ELECTRODE SYSTEM TO EACH BUILDING TELEPHONE TERMINAL/DATA IDF TERMINAL BOARDS, OR CABINETS, FIRE ALARM CONTROL CABINETS, CCTV SYSTEM CABINETS, EMS CABINETS, AND SECURITY SYSTEM CABINETS. TERMINATE ON AN APPROPRIATELY SIZED (8) TERMINAL MULTI-CONDUCTOR CONNECTION GROUNDING LUG LOCATED WITHIN CABINET OR ON TERMINAL BOARDS.

IX. PANELBOARDS:

A. PANELBOARDS SHALL BE DEAD FRONT TYPE AND SHALL BE IN ACCORDANCE WITH UNDERWRITERS' LABORATORIES, INC., STANDARD FOR PANELBOARDS AND ENCLOSING CABINETS AND SO LABELED.

B. PANELBOARDS SHALL BE FACTORY ASSEMBLED WITH BRANCH BREAKERS ARRANGED AS SHOWN IN SCHEDULES. BREAKERS SHALL BE NUMBERED VERTICALLY BEGINNING TOP LEFT. BREAKER NUMBERS SHALL BE PERMANENTLY ATTACHED TO TRIM. PANEL SHALL BE MINIMUM 20" WIDE OR 16" FOR RESIDENTIAL LOAD CENTERS, UNLESS SPECIFICALLY NOTED OTHERWISE.

C. ANY SPECIAL REQUIREMENTS ON THE DRAWINGS OR SCHEDULES, SUCH AS GROUND FAULT PROTECTION, ARC-FAULT CIRCUIT BREAKERS, INCREASED INTERRUPTING CAPACITY, SHUNT TRIP TYPE CIRCUIT BREAKER, FEED THRU PANELBOARDS, ETC., SHALL SUPERSEDE THESE SPECIFICATIONS, BUT ONLY INSOFAR AS THAT PARTICULAR REQUIREMENT IS CONCERNED AND AS INDICATED.

D. WIRING IN PANELBOARD GUTTERS SHALL BE DONE IN A NEAT AND WORKMANLIKE MANNER. WIRING SHALL BE GROUPED INTO NEAT BUNDLES AND SECURED WITH NYLON TIE WRAPS.

E. PROVIDE TYPE WRITTEN DIRECTORIES FOR EACH PANELBOARD INDICATING THE LOAD SERVED.

X. LIGHTING FIXTURES:

A. LIGHTING FIXTURES SHALL BE FURNISHED AS SHOWN ON DRAWINGS AND IN THE LIGHTING FIXTURE SCHEDULE. IT SHALL SPECIFICALLY BE THE RESPONSIBILITY OF THE CONTRACTOR TO VERIFY EXACT TYPE CEILING AND RECESSING DEPTH OF ALL RECESSED FIXTURES AND TO FURNISH THE MOUNTING TRIMS AND ACCESSORIES OF THE SPECIFIED AND/OR APPROVED FIXTURES FOR THE CEILING TO BE INSTALLED. LIGHTING FIXTURES SHALL BE PROVIDED WITH JOINER PLATES, END CAPS, RETAINING CLIPS, PLASTER FRAMES, HOUSINGS, AND ALL OTHER ACCESSORIES REQUIRED FOR A COMPLETE INSTALLATION.

B. ALL FIXTURES SHALL BE EQUIPPED WITH LAMPS UNLESS OTHERWISE NOTED. LAMPS SHALL BE INSTALLED NEW, IMMEDIATELY PRIOR TO FINAL INSPECTION, AND SHALL NOT BE USED FOR CONSTRUCTION.

C. FIXTURE CATALOG NUMBER REPRESENTS BASIC LUMINARY SIZE, TYPE, QUALITY AND CONFIGURATION. ACCESSORIES SHALL BE FURNISHED WITH EACH UNIT AS REQUIRED FOR A COMPLETE FINISHED INSTALLATION. BASIC ACCESSORIES SHALL INCLUDE, BUT ARE NOT LIMITED TO, THE FOLLOWING:

1. JOINING PLATES, END CAPS, RETAINING CLIPS, ETC.
2. TRIMS FOR RECESSED FIXTURES.
3. FIXTURE STEMS AND CANOPIES FINISHED TO MATCH FIXTURES.
4. SPECIAL MOUNTING BRACKETS, TENONS, SLIP FILTERS, CONCRETE BASES, POLES, ANCHOR BOLTS, JUNCTION BOXES, AND STANCHIONS FOR ALL EXTERIOR LIGHTING FIXTURES. PROVIDE ALL WEATHERPROOFING FOR ALL LIGHTING FIXTURES TO BE INSTALLED IN EXTERIOR LOCATIONS.

D. STRUCTURAL SUPPORT OF ALL FIXTURES SHALL BE THE RESPONSIBILITY OF THE CONTRACTOR.

E. THE SYSTEM GROUNDING CONDUCTOR SHALL BE SECURED TO EACH FIXTURE BODY BY MEANS OF A BONDING SCREW.

F. OWNER/DEVELOPER WILL HAVE RIGHT TO RELOCATE LIGHTING FIXTURES OR LIGHTING SWITCHES WITHIN 72" OF LOCATION SHOWN ON FIRST WALK-THROUGH AT NO ADDITIONAL EXPENSE. COORDINATE THE WALK-THROUGH PRIOR TO THE INSTALLATION OF THE WIRING.

XI. FIRE ALARM SYSTEMS

A. THIS SECTION INCLUDES AUTOMATIC ADDRESSABLE VOICE EVACUATION FIRE ALARM SYSTEMS, INCLUDING FIRE ALARM CONTROL PANEL, AND REMOTE ANNUNCIATOR, MANUAL PULL STATIONS, HEAT AND SMOKE DETECTORS, FIRE ALARM AUDIO, VISUAL SIGNAL EQUIPMENT, CONTROLS, AND SURGE PROTECTION DEVICES. COORDINATE ALL WIRING AND DEVICE INTERFACES WITH OWNER'S REPRESENTATIVE. THE FIRE ALARM SYSTEM SHALL MEET THE LATEST ADOPTED EDITION OF NFPA 72. ALL LOCAL AND STATE AMENDMENTS AND FEDERAL ADA REQUIREMENTS. ALL DEVICES SHALL BE WHITE IN COLOR WITH RED LETTERING.

B. GENERAL: COMPLETE, ZONED, NONCODED, ADDRESSABLE, MICROPROCESSOR-BASED FIRE DETECTION ALARM SYSTEM WITH MANUAL AND AUTOMATIC ALARM INITIATION SIGNALS FROM A SUPERVISED FIRE ALARM SOUND DISTRIBUTION SYSTEM. DEVICES LOCATED OUTDOORS SHALL BE SPECIFICALLY DESIGNED FOR EXTERIOR SERVICE. PROVIDE BATTERY BACK-UP BASED UPON TOTAL LOAD PER NFPA 72. ALARM SHALL ACHIEVE A MINIMUM OF 80 DB THROUGHOUT OCCUPIABLE SPACES AND MEET ADA REQUIREMENTS.

C. TRANSMISSION TO REMOTE CENTRAL STATION: PROVIDE WIRING TO AUTOMATICALLY ROUTE AN ALARM, SUPERVISORY, AND TROUBLE SIGNALS TO THE GRAND SANDESTIN CENTRAL STATION SERVICE TRANSMITTER LOCATED IN MAIN FIRE ALARM CONTROL PANEL USING LISTED AND APPROVED EQUIPMENT. PROVIDE ALL NECESSARY WIRING CONNECTION BY THIS CONTRACTOR.

D. GENERAL ALARM: A SYSTEM GENERAL ALARM INCLUDES:

1. INDICATING THE GENERAL ALARM CONDITION AT THE FACP AND THE INTEGRAL ANNUNCIATOR.
2. IDENTIFYING THE DEVICE THAT IS THE SOURCE OF THE ALARM AT THE FACP AND THE ANNUNCIATOR.
3. INITIATING AUDIBLE AND VISIBLE ALARM SIGNALS THROUGHOUT THE BUILDING.
4. STOPPING HVAC SUPPLY AND RETURN FANS.
5. INITIATING TRANSMISSION OF ALARM SIGNAL TO REMOTE CENTRAL STATION.
6. MANUAL STATION ALARM OPERATION INITIATES A GENERAL ALARM.
7. SMOKE OR HEAT DETECTION INITIATES A GENERAL ALARM.

E. INSTALLER QUALIFICATIONS: A CERTIFIED FACTORY-TRAINED TECHNICIAN IS TO PERFORM THE WORK OF THIS SECTION, MAKING UP ALL TERMINAL CABINETS, INSTALLING ALL SURGE SUPPRESSORS, AND INCLUDING LANDING AND TESTING EACH WIRE, MOUNTING AND CONNECTING ALL DEVICES, PROGRAMMING THE MAIN FACP, TROUBLE SHOOTING AND CERTIFYING THE FINAL SYSTEM. THE CONTRACTOR SHALL BE CURRENTLY LICENSED BY THE STATE FOR FIRE ALARM WORK, AND SHALL BE A CERTIFIED FACTORY-TRAINED TECHNICIAN. CONTRACTOR IS RESPONSIBLE FOR OBTAINING NECESSARY FIRE ALARM PERMITS FROM AUTHORITY HAVING JURISDICTION.

F. FIRE ALARM DEVICES AND EQUIPMENT TO BE INSTALLED OUTDOORS IN EXTERIOR LOCATIONS SHALL BE SPECIFICALLY DESIGNED AND U.L. LISTED AS WEATHER AND WATERPROOF. PROVIDE WEATHERPROOF NEOPRENE GASKETS BETWEEN WALL MOUNTING SURFACE AND FIRE ALARM DEVICE FOR ALL DEVICES MOUNTED OUTDOORS.

G. AVAILABLE MANUFACTURERS: SUBJECT TO COMPLIANCE WITH REQUIREMENTS. ALL DEVICES SHALL BE PROVIDED FOR AND MANUFACTURED BY SIMPLEX, EST, NOTIFIER, OR PYROTRONICS.

H. DESCRIPTION: DOUBLE-ACTION NON-BREAK GLASS, ADDRESSABLE TYPE, FABRICATED OF METAL OR PLASTIC, AND FINISHED IN WHITE WITH MOLDED, RAISED-LETTER OPERATING INSTRUCTIONS OF RED COLOR. ADDRESS OF UNIT SHALL BE FIELD-SETTABLE WITHOUT SPECIAL TOOLS.

I. INITIATION CIRCUITS (LOOP): INITIATION LOOP CONDUCTORS SHALL BE WEST PENN #D991 FOR 3000'-0" IN LENGTH AND LESS. WEST PENN #D995 SHALL BE USED FOR CIRCUITS OVER 3000'-0" IN LENGTH. BELOW GRADE, WET OR DAMP LOCATION INSTALLED CABLE, INCLUDING CABLE INSTALLED ON THE TOP OF EXTERIOR WALKWAYS, SHALL BE WEST PENN AQUASEAL MULTI-CONDUCTOR (14 GAUGE), UNLESS NOTED OTHERWISE, SHALL BE INSTALLED IN CONDUIT.

J. SIGNAL CIRCUITS: SIGNAL CIRCUITS SHALL BE #12 AWG THWN 19 STRAND COPPER.

K. ANNUNCIATOR CIRCUITS: #12 AWG THWN 19 STRAND COPPER.

L. EACH AND EVERY WIRE SHALL BE LABELED AT EACH END WITH SLC #, CHANNEL # OR SIGNAL #. EACH SEPARATE CIRCUIT, INITIATION, SIGNAL AND AUXILIARY SHALL HAVE A SPECIFIC NUMBER. LABEL EACH CONDUCTOR BY THIS CIRCUIT NUMBER AT THE CONTROL CONNECTIONS AND AT EACH TERMINAL CONNECTION IN THE TERMINAL CABINETS.

M. PROVIDE COMPLETE SIGNAL, SPEAKER DATA LOOP AND POWER SIDE SURGE SUPPRESSION MODULES ON ALL WIRING ENTERING OR LEAVING EACH BUILDING. THE CONTRACTOR SHALL REPAIR ANY DAMAGED COMPONENTS OR WIRING DUE TO TRANSIENT VOLTAGE SURGES FOR A PERIOD OF ONE YEAR FROM SUBSTANTIAL COMPLETION DATE AT NO ADDITIONAL COST.

N. PROVIDE RELAYS FOR OTHER LOCAL CONTROL SUCH AS HVAC SHUTDOWN AND/OR STAIR PRESSURIZATION FAN INITIATION, ROLL-UP DOOR ACTIVATION, FIRE/SMOKE DAMPER RELEASE OR SMOKE EVACUATION INITIATION. RELAYS SHALL BE 10 AMP RATED RELAYS. UPON ACTIVATION OF THE FIRE ALARM SYSTEM, THE RELAY SHALL ACTIVATE AND SHUTDOWN THE CONTROLLED EQUIPMENT. LOCATE ALL RELAYS WITHIN 36" OF EQUIPMENT CONTROLLED. PROVIDE WEATHERPROOF UNITS WHERE INDICATED OR INSTALL IN WEATHERPROOF BOXES.

O. PROVIDE REMOTE AUDIO/VISUAL POWER SUPPLY AND BATTERY CHARGER IN A SELF-CONTAINED LOCKABLE CABINET. PROVIDE (4) STYLE Y NOTIFICATION CIRCUITS, AND AN INTEGRAL BATTERY CHARGER. PROVIDE UNIT WITH INTEGRAL 120 VOLT INPUT A/C POWER AND INTEGRAL LEAD ACID BATTERY. PROVIDE SURGE SUPPRESSION FOR 120 VOLT BRANCH CIRCUIT AND PROVIDE A 20 AMP 125 VAC SPECIFICATION GRADE KEY TYPE SWITCH TO CONTROL THE POWER TO THE SIGNAL EXPANDER FOR MAINTENANCE. IDENTIFY THE 120 VOLT CIRCUIT SERVING THE SWITCH (I.E. PANELBOARD AND BRANCH CIRCUIT NUMBER).

P. PROVIDE A FLUSH MOUNTED LCD REMOTE ANNUNCIATOR. UNIT SHALL BE NO LARGER THAN 12" TALL X 16" LONG, AND SHALL BE COMPLETELY FLUSH MOUNTED IN THE MAIN LOBBY OF THE FACILITY.

Q. INSTALLATION: CONTRACTOR SHALL PROVIDE ALL CONDUIT, WIRING RELAYS, CONTROLS AND ASSOCIATED DEVICES AND DETECTORS FOR PHASE I AND PHASE II RECALL PER FLORIDA BUILDING CODE (FBC) REQUIREMENTS AND STATE ELEVATOR INSPECTOR REQUIREMENTS.

R. WIRING METHOD: INSTALL WIRING IN METAL RACEWAY. CONCEAL RACEWAY EXCEPT IN UNFINISHED SPACES AND AS INDICATED.

S. NO FIRE ALARM CONDUCTORS SHALL BE INSTALLED BELOW GRADE WITH THE EXCEPTION OF CONDUCTORS ROUTED FROM BUILDING TO BUILDING, AS NOTED, OR WHERE ABSOLUTELY NECESSARY AND WITH PRIOR WRITTEN PERMISSION OF THE OWNER AND ENGINEER. ALL OTHER WIRING SHALL BE OVERHEAD INSTALLED IN CONCEALED CONDUIT MINIMUM 1/2". NO UNDERGROUND, ON GROUND OR UNDERGROUND SPLICES IN PULL BOXES WILL BE ALLOWED.

T. MOUNTING BOXES FOR SPEAKERS/HORN/STROBES, CONTROL AND MONITOR MODULES SHALL BE INSTALLED IN DEEP JUNCTION BOXES WITH EXTENSION RING ATTACHED.

U. MINIMUM SYSTEM TESTS: TEST THE SYSTEM ACCORDING TO THE PROCEDURES OUTLINED IN NFPA 72. MINIMUM REQUIRED TESTS ARE AS FOLLOWS:

1. VERIFY THE ABSENCE OF UNWANTED VOLTAGES BETWEEN CIRCUIT CONDUCTORS AND GROUND.
2. MEGGER TEST ALL CONDUCTORS OTHER THAN THOSE INTENTIONALLY AND PERMANENTLY GROUNDED WITH ELECTRONIC COMPONENTS DISCONNECTED. TEST FOR RESISTANCE TO GROUND. REPORT READINGS OF LESS THAN 1-MEGOHM FOR EVALUATION.
3. TEST ALL CONDUCTORS FOR SHORT CIRCUITS UTILIZING AN INSULATION-TESTING DEVICE.
4. WITH EACH CIRCUIT PAIR, SHORT CIRCUIT AT THE FAR END OF THE CIRCUIT AND MEASURE THE CIRCUIT RESISTANCE WITH AN OHMMETER. RECORD THE CIRCUIT RESISTANCE OF EACH CIRCUIT ON THE RECORD DRAWINGS.
5. VERIFY THE CONTROL UNIT IS IN THE NORMAL CONDITION AS DETAILED IN THE MANUFACTURER'S OPERATING AND MAINTENANCE MANUAL.
6. TEST INITIATING AND INDICATING CIRCUITS FOR PROPER SIGNAL TRANSMISSION UNDER OPEN CIRCUIT CONDITIONS. ONE CONNECTION EACH SHOULD BE OPENED AT NOT LESS THAN 10 PERCENT OF THE INITIATING AND INDICATING DEVICES. OBSERVE PROPER SIGNAL TRANSMISSION ACCORDING TO CLASS OF WIRING USED.
7. TEST EACH INITIATING AND INDICATING DEVICE FOR ALARM OPERATION AND PROPER RESPONSE AT THE CONTROL UNIT. TEST SMOKE DETECTORS WITH ACTUAL PRODUCTS OF COMBUSTION.
8. TEST THE SYSTEM FOR ALL SPECIFIED FUNCTIONS ACCORDING TO THE MANUFACTURER'S OPERATING AND MAINTENANCE MANUAL. SYSTEMATICALLY INITIATE SPECIFIED FUNCTIONAL PERFORMANCE ITEMS AT EACH STATION INCLUDING MAKING ALL POSSIBLE ALARM AND MONITORING INITIATIONS AND USING ALL COMMUNICATIONS OPTIONS. FOR EACH ITEM, OBSERVE RELATED PERFORMANCE AT ALL DEVICES REQUIRED TO BE AFFECTED BY THE ITEM UNDER ALL SYSTEM SEQUENCES. OBSERVE INDICATING LIGHTS, DISPLAYS, SIGNAL TONES, AND ANNUNCIATOR INDICATIONS. OBSERVE ALL VOICE AUDIO FOR ROUTING, CLARITY, QUALITY, FREEDOM FROM NOISE AND DISTORTION, AND PROPER VOLUME LEVEL.
9. TEST BOTH PRIMARY POWER AND SECONDARY POWER. VERIFY, BY TEST, THE SECONDARY POWER SYSTEM IS CAPABLE OF OPERATING THE SYSTEM FOR THE PERIOD AND IN THE MANNER SPECIFIED.

V. OCCUPANCY ADJUSTMENTS: WHEN REQUESTED WITHIN ONE YEAR OF DATE OF SUBSTANTIAL COMPLETION, PROVIDE ON-SITE ASSISTANCE IN ADJUSTING SOUND LEVELS AND ADJUSTING CONTROLS AND SENSITIVITIES TO SUIT ACTUAL OCCUPIED CONDITIONS. PROVIDE UP TO FIVE PREPAID VISITS TO THE SITE FOR THIS PURPOSE.

W. PROVIDE THE SERVICES OF A FACTORY-AUTHORIZED SERVICE REPRESENTATIVE TO DEMONSTRATE THE SYSTEM AND TRAIN OWNER'S MAINTENANCE PERSONNEL AS SPECIFIED BELOW:

1. TRAIN OWNER'S MAINTENANCE PERSONNEL IN THE LOCATION OF DEVICES, BOXES, PROCEDURES AND SCHEDULES INVOLVED IN OPERATING, TROUBLESHOOTING, SERVICING, AND PREVENTIVE MAINTAINING OF THE SYSTEM. PROVIDE A MINIMUM OF 4 HOURS TRAINING. TRAINING SHALL INCLUDE A COMPLETE PROJECT WALKDOWN WITH OWNER'S AUTHORIZED REPRESENTATIVE TO IDENTIFY DEVICE LOCATIONS, JUNCTION BOX LOCATIONS AND SURGE SUPPRESSION MODULE LOCATIONS.
2. SCHEDULE TRAINING WITH THE OWNER AT LEAST SEVEN WORKING DAYS IN ADVANCE.

ISSUE HISTORY

No.	Date	Description
1	04/15/22	Permit Submission

REVISION HISTORY

No.	Date	Description

FUGLEBERG KOCH
2555 Temple Trail, Winter Park, FL 32789 (407) 629-0595
www. fuglebergkoch.com AA26002103

CONSULTANT
Joseph, Lawrence & Co
Consulting Engineers
1180 HARWOOD AVE. SUITE 3000
ALTAMONTE SPRINGS, FLORIDA 32714
TEL: 321.972.4466
WWW.JLCENG.COM
CA NO. 4050 - E

JLC 22.0023.00

ALABAMA LICENSED No. 31127 PROFESSIONAL ENGINEER BLAKE L. SUDDETH

THE MADISON	Drawn:	MJR/SMB
	Checked:	BLS/AJB
	Approval:	BLS/AJB
	Date:	04/15/2022
HUNTSVILLE, AL	Project #:	5722

SPECIFICATIONS ELECTRICAL

E7.01

© 2018 These documents and their contents are the property of FUGLEBERG KOCH - AA26002103, and are issued only for the specific project noted on these drawings. Any reproductions, revisions, or modifications of these documents without the expressed written consent of Fugleberg Koch is prohibited by law.

LEGEND

Symbol	Description
	DIRECTION OF FLOW IN PIPE
	PITCH PIPE DOWN IN DIRECTION OF ARROW
	PIPE UP
	PIPE DOWN
EJ	EXPANSION JOINT
	FLEXIBLE PIPE CONNECTOR
	BALL VALVE
	CHECK VALVE, HORIZONTAL SWING
	GATE VALVE
	BUTTERFLY VALVE
	GLOBE VALVE
	BALANCING VALVE
BC	BALANCING COCK
	STRAINER, Y-TYPE AND BLOWOFF VALVE
RV	PRESSURE RELIEF VALVE (WATER)
PRV	PRESSURE REDUCING VALVE
MAV	MANUAL AIR VENT
S	SOLENOID VALVE
	VALVE OS & Y
	CAPPED LINE
—— SAN ——	SANITARY SEWER (ABOVE GRADE)
– – SAN – –	SANITARY SEWER (BELOW GRADE)
—— – ——	DOMESTIC COLD WATER
——BP——	BOOSTED PRESSURE DOMESTIC COLD WATER
—— – – ——	DOMESTIC HOT WATER
—— – – – ——	DOMESTIC HOT WATER RETURN
– – CD – –	CONDENSATE DRAIN (BELOW GRADE)
—— CD ——	CONDENSATE DRAIN (ABOVE GRADE)
– – ST – –	STORM SEWER (BELOW GRADE)
—— ST ——	STORM SEWER (ABOVE GRADE)
——SEC——	SECONDARY STORM SEWER
– – GR – –	GREASE SEWER (BELOW GRADE)
—— GR ——	GREASE SEWER (ABOVE GRADE)
– -SCW – –	SOFT COLD WATER
————	VENT
– – G – –	GAS LINE (BELOW GRADE)
—— G ——	GAS LINE (ABOVE GRADE)
	POINT OF CONNECTION NEW TO EXISTING
	POINT OF REMOVAL FOR DEMOLITION
△T	DELTA T (TEMPERATURE DIFFERENCE)
A / B	PHOTO DETAIL OR SECTION IDENTIFICATION TARGET A = DETAIL NUMBER. B = SHEET NUMBER ON WHICH DETAIL IS LOCATED.
HB	HOSE BIBB
FD	FLOOR DRAIN
HD	HUB DRAIN
TD	TRENCH DRAIN
– – A – –	COMPRESSED AIR (BELOW GRADE)
—— A ——	COMPRESSED AIR (ABOVE GRADE)
	FLOOR CLEANOUT
	CLEANOUT
	EXTERIOR CLEANOUT
	HORIZONTAL CLEANOUT
——PD——	PAN DRAIN (FROM WATER HEATER)
——FW——	FILTERED WATER
	SHOCK ABSORBER
GD	GARBAGE DISPOSAL
DW	DISHWASHER

NOTE:

SYMBOLS SHOWN ON THIS PLUMBING LEGEND ARE FOR REFERENCE PURPOSES ONLY. ALL OF THESE SYMBOLS MAY NOT BE USED FOR THIS PROJECT.

SPECIFICATIONS

PART 1 – GENERAL

1.1 SECTION INCLUDES
- A. GENERAL PROVISIONS SPECIFICALLY APPLICABLE TO DIVISION 15 SECTIONS, IN ADDITION TO DIVISION 1 – GENERAL REQUIREMENTS.

1.2 SCOPE
- A. THE WORK SHALL INCLUDE THE PROVISIONS OF SYSTEMS, EQUIPMENT AND MATERIALS SPECIFIED IN THIS DIVISION AND AS CALLED FOR ON THE DRAWINGS. WORK SHALL ALSO INCLUDE SUPERVISION, OPERATION, METHODS AND LABOR FOR THE FABRICATION, START-UP AND TESTS FOR A COMPLETE OPERATIONAL PLUMBING INSTALLATION.
- B. DRAWINGS FOR THE WORK ARE DIAGRAMMATIC IN NATURE AND ARE INTENDED TO CONVEY THE SCOPE OF THE INSTALLATION AND TO INDICATE THE GENERAL ARRANGEMENT AND LOCATIONS OF THE WORK. BECAUSE OF THE SCALE OF THE DRAWINGS, CERTAIN BASIC ITEMS SUCH AS PIPE FITTINGS, ACCESS PANELS, AND SLEEVES MAY NOT BE SHOWN. THIS CONTRACTOR SHALL BE RESPONSIBLE FOR SELECTING THE EQUIPMENT TO FIT THE SPACE PROVIDED. THE LOCATION AND SIZES FOR PIPE FITTINGS, SLEEVES, INSERTS, FIRE AND/OR SMOKE DAMPERS, AND OTHER BASIC ITEMS REQUIRED BY CODE AND OTHER SECTIONS SHALL BE COORDINATED AND INCLUDED FOR THE PROPER INSTALLATION OF THE WORK.
- C. EQUIPMENT SPECIFICATIONS MAY NOT DEAL INDIVIDUALLY WITH MINUTE ITEMS REQUIRED SUCH AS COMPONENTS, PARTS, CONTROLS AND DEVICES WHICH MAY BE REQUIRED TO PRODUCE THE EQUIPMENT PERFORMANCE SPECIFIED OR AS REQUIRED TO MEET THE EQUIPMENT WARRANTIES. WHERE SUCH ITEMS ARE REQUIRED, THEY SHALL BE INCLUDED BY THE INSTALLER OF THE EQUIPMENT, WHETHER OR NOT SPECIFICALLY INDICATED IN THE CONTRACT DOCUMENTS WITH NO ADDITIONAL COST INCURRED.
- D. WHERE NOTED ON THE DRAWINGS OR INDICATED IN OTHER SECTIONS OF THE SPECIFICATION, THE CONTRACTOR FOR THIS DIVISION SHALL INSTALL PLUMBING EQUIPMENT FURNISHED BY OTHERS, AND SHALL MAKE ALL FINAL CONNECTIONS. CONTRACTOR SHALL INSTALL EQUIPMENT AND SYSTEMS IN STRICT ACCORDANCE WITH MANUFACTURERS RECOMMENDATIONS.
- E. COORDINATE WITH ALL TRADES IN SUBMITTAL OF SHOP DRAWINGS. TIGHT SPACE CONDITIONS SHALL BE DETAILED TO THE SATISFACTION OF ALL TRADES, SUBJECT TO THE REVIEW AND FINAL ACCEPTANCE OF THE ARCHITECT/ENGINEER. IN THE EVENT THAT THE CONTRACTOR INSTALLS HIS WORK BEFORE COORDINATING WITH OTHER TRADES OR SO AS TO CAUSE ANY INTERFERENCE WITH THE WORK OF THE OTHER TRADES THIS CONTRACTOR SHALL MAKE ALL REQUIRED CHANGES TO CORRECT THE CONDITION AT NO ADDITIONAL COST TO THE PROJECT.
- F. CONTRACTOR SHALL VERIFY ALL EQUIPMENT CONNECTION SIZES PRIOR TO INSTALLATION OF ANY SYSTEMS. THIS CONTRACTOR SHALL ADJUST PIPING SYSTEM SIZES AS REQUIRED TO MATCH EQUIPMENT CONNECTIONS. UTILIZE REDUCERS WHERE EQUIPMENT CONNECTIONS ARE SMALLER THAN PIPE SIZES INDICATED ON PLANS, NO PIPING SHALL BE DECREASED IN SIZE (IN THE DIRECTION OF FLOW).

1.3 EXAMINATION OF BIDDING DOCUMENTS:
- A. EACH BIDDER SHALL EXAMINE THE BIDDING DOCUMENTS CAREFULLY AND NOT LATER THAN TEN (10) DAYS PRIOR TO THE DATE FOR RECEIPT OF BIDS, SHALL MAKE WRITTEN REQUEST TO THE ENGINEER FOR INTERPRETATION OR CORRECTION OF ANY AMBIGUITY, INCONSISTENCY OR ERROR THEREIN. ANY INTERPRETATION OR CORRECTION WILL BE ISSUED AS AN ADDENDUM BY THE ENGINEER. ONLY A WRITTEN INTERPRETATION OR CORRECTION TO BID DOCUMENTS BY ADDENDUM SHALL BE BINDING. NO BIDDER SHALL RELY UPON ANY INTERPRETATION OR CORRECTION GIVEN BY ANY OTHER METHOD.

1.4 SUBSTITUTIONS:
- A. EXCEPT AS PROVIDED BELOW, EACH BIDDER REPRESENTS THAT HIS BID IS BASED UPON THE MATERIALS AND EQUIPMENT DESCRIBED IN THE BIDDING DOCUMENTS.
- B. NO SUBSTITUTIONS FOR OTHER MATERIALS AND EQUIPMENT WILL BE CONSIDERED UNLESS WRITTEN REQUEST HAS BEEN SUBMITTED TO THE ENGINEER FOR APPROVAL AT LEAST TEN (10) DAYS PRIOR TO THE DATE FOR RECEIPT OF BIDS. EACH SUCH REQUEST SHALL INCLUDE A COMPLETE DESCRIPTION OF THE PROPOSED SUBSTITUTE, THE NAME OF THE MATERIAL OR EQUIPMENT FOR WHICH IT IS TO BE SUBSTITUTED, DRAWINGS, CUTS, PERFORMANCE AND TEST DATA OR INFORMATION NECESSARY FOR A COMPLETE EVALUATION.
- C. IF THE ENGINEER APPROVES ANY PROPOSED SUBSTITUTION, SUCH APPROVAL WILL BE ISSUED AS AN ADDENDUM FORWARDED TO ALL PARTICIPATING BIDDERS.
- D. IF ANY BIDDER IS UNABLE TO PROCURE WRITTEN APPROVAL OF ANY SUBSTITUTION FROM THE ENGINEER PRIOR TO THE OPENING OF BIDS, THEN HE SHALL BASE HIS BID ON ITEMS AND SYSTEMS AS SPECIFIED IN BID DOCUMENTS.
- E. SUBSTITUTIONS REQUESTED ON THE BID PROPOSAL FORM WHICH ARE PRIOR APPROVED BY THE ENGINEER WILL BE INCORPORATED INTO THE CONTRACT WITH THE SUCCESSFUL BIDDER.
- F. REQUESTS FOR ANY SUBSTITUTIONS NOT SUBMITTED AND APPROVED IN ACCORDANCE WITH THE ABOVE INSTRUCTIONS WILL BE DENIED BY THE ENGINEER.

1.5 REGULATORY REQUIREMENTS:
- A. ALL INSTALLATIONS AND EQUIPMENT SHALL BE IN STRICT ACCORDANCE WITH ALL APPLICABLE STATUTES, CODES AND REGULATIONS OF THE GOVERNMENTAL BODIES HAVING JURISDICTION.
- B. CONFORM TO THE LATEST EDITION OF THE INTERNATIONAL PLUMBING CODE.
- C. CONFORM TO THE LATEST EDITION OF THE INTERNATIONAL FIRE PREVENTION CODE.
- D. CONFORM TO THE LATEST EDITION OF THE INTERNATIONAL BUILDING CODE.

1.6 CUTTING AND PATCHING:
- A. SUBMIT WRITTEN REQUEST IN ADVANCE OF CUTTING OR ALTERING ELEMENTS.
- B. EMPLOY SKILLED AND EXPERIENCED INSTALLER TO PERFORM CUTTING AND PATCHING WHICH EFFECT:
  - B.1 STRUCTURAL INTEGRITY OF ELEMENT.
  - B.2 INTEGRITY OF WEATHER.
  - B.3 EFFICIENCY, MAINTENANCE, OR SAFETY OF ELEMENT.
  - B.4 VISUAL QUALITIES OF SIGHT.
  - B.5 WORK OF OWNER OR SEPARATE CONTRACTOR.

PART 2 – PRODUCTS

2.1 PIPE HANGERS AND SUPPORTS
- A. MANUFACTURERS:
  - A.1 B-LINE
  - A.2 OTHER ACCEPTABLE MANUFACTURERS OFFERING EQUIVALENT PRODUCTS.
    - A.2.1 MICHIGAN HANGER
    - A.2.2 PHD

2.2 PIPING INSULATION:
- A. COMMERCIAL SPACE:
  - A.A. ALL HOT WATER PIPING = R-4 MINIMUM
  - A.B. HOT WATER RETURN PIPING = R-4.
- C. ALL PIPING WITHIN THE ATTIC OR UNCONDITIONED SPACE SHALL BE INSULATED.
- D. MANUFACTURERS:
  - A.1 OWENS CORNING
  - A.2 JOHNS MANVILLE
  - A.3 KNAUF
- E. ASTM C547, RIGID MOLDED NON-COMBUSTIBLE FIBERGLASS INSULATION. 'K' VALUE .024 @ 75 DEGREES F.
- F. VAPOR BARRIER JACKET, KRAFT PAPER WITH GLASS FIBER YARN AND BONDED TO ALUMINUM FILM. CLOSURE SYSTEM SHALL BE UL 181.

2.3 PIPING: DRAINAGE, WASTE & VENT PIPING
- A. PVC: ASTM D2665 SCHEDULE 40 PVC SOLID WALL PIPING.
  - A.1 FITTINGS: ASTM D2665 SCHEDULE 40 PVC DWV FITTINGS.
  - A.2 JOINTS: ASTM D2564 SOLVENT CEMENT. JOINTS SHALL BE INSTALLED IN ACCORDANCE WITH ASTM D2855.
- B. FIRE WRAPPED PVC OR CAST IRON PIPING TO BE USED IN ALL PLENUM SPACES.
- C. FOAM CORE SCHEDULE 40 DWV PIPE IS NOT AN ACCEPTABLE ALTERNATE TO STANDARD SCHEDULE 40 PVC.

2.4 PIPING: WATER PIPING
- A. COPPER PIPING: ASTM B88 TYPE 'L' HARD DRAWN.
  - A.1 FITTINGS: ASME 16.18 CAST BRONZE OR ASME B16.22 WROUGHT COPPER OR BRONZE.
  - A.2 JOINTS: ASTM B32 SOLDER, ASTM 95-5 TA MINIMUM, FLUX ASTM B813. JOINTS SHALL BE INSTALLED IN ACCORDANCE WITH ASTM B828.
  - A.3 SUBSTITUTIONS: CPVC IS AN ACCEPTABLE ALTERNATIVE TO COPPER ONLY IF APPROVED BY BUILDING OWNER.
- B. CPVC PIPING: ASTM F441/F441M-15 CHLORINATED POLY PLASTIC PIPE. SCHEDULE 40 AND 80 HOT AND COLD WATER DISTRIBUTION PIPING. IS AN ACCEPTABLE ALTERNATE UPON APPROVAL OF ENGINEER, BUILDING OWNER AND PROJECT OWNER.
  - B.A. IT IS NOT ACCEPTABLE TO ROUTE CPVC PIPING BELOW GRADE OR WITHIN CONCRETE.
- C. PEX PIPING: ASTM F877-18 CROSSLINKED POLYETHYLENE HOT AND COLD WATER DISTRIBUTION PIPING. IS AN ACCEPTABLE ALTERNATE UPON APPROVAL OF ENGINEER, BUILDING OWNER AND PROJECT OWNER

2.5 PIPING: GAS PIPING
- A. STEEL PIPE: ASTM A 53/A 53M; TYPE E OR S; GRADE B; BLACK. WALL THICKNESS OF WROUGHT-STEEL PIPE SHALL COMPLY WITH ASME B36.10M.
  - A.1 MALLEABLE-IRON THREADED FITTINGS: ASME B16.3, CLASS 150, STANDARD PATTERN, WITH THREADED ENDS ACCORDING TO ASME B1.20.1.
  - A.2 STEEL THREADED FITTINGS: ASME B16.11, FORGED STEEL WITH THREADED ENDS ACCORDING TO ASME B1.20.1.
  - A.3 STEEL WELDING FITTINGS: ASME B16.9, WROUGHT STEEL OR ASME B16.11, FORGED STEEL.
  - A.4 UNIONS: ASME B16.39, CLASS 150, MALLEABLE IRON WITH BRASS-TO-IRON SEAT, GROUND JOINT, AND THREADED ENDS ACCORDING TO ASME B1.20.1.
  - A.5 CAST-IRON FLANGES AND FLANGED FITTINGS: ASME B16.1, CLASS 125.
  - A.6 JOINT COMPOUND AND TAPE: SUITABLE FOR NATURAL GAS.
  - A.7 STEEL FLANGES AND FLANGED FITTINGS: ASME B16.5.
  - A.8 GASKET MATERIAL: THICKNESS, MATERIAL, AND TYPE SUITABLE FOR NATURAL GAS.

2.5 CONDENSATE PIPING
- A. ALL PIPING RECEIVING CONDENSATE OR DRAINAGE FROM ANY TYPE OF EVAPORATOR PRODUCING COLD WATER SHALL BE INSULATED.

PART 3 – INSTALLATION

- 3.1 INSTALL IN STRICT ACCORDANCE WITH MANUFACTURER'S INSTRUCTIONS.
- 3.2 PROVIDE NON-CONDUCTING DIELECTRIC CONNECTIONS WHEREVER JOINTING DISSIMILAR METALS.
- 3.3 ROUTE PIPING IN ORDERLY MANNER AND MAINTAIN GRADIENT.
- 3.4 INSTALL PIPING TO CONSERVE BUILDING SPACE AND NOT INTERFERE WITH USE OF SPACE.
- 3.5 GROUP PIPING WHENEVER PRACTICAL AT COMMON ELEVATIONS.
- 3.6 INSTALL PIPING TO ALLOW FOR EXPANSION AND CONTRACTION WITHOUT STRESSING PIPE, JOINTS, OR CONNECTED EQUIPMENT.
- 3.7 PROVIDE CLEARANCE FOR INSTALLATION OF INSULATION AND ACCESS TO VALVES AND FITTINGS.
- 3.8 PROVIDE ACCESS WHERE VALVES AND FITTINGS ARE NOT EXPOSED. COORDINATE SIZE AND LOCATION OF ACCESS DOORS WITH APPROPRIATE ARCHITECTURAL SECTION.
- 3.9 ESTABLISH ELEVATIONS OF BURIED PIPING OUTSIDE THE BUILDING TO ENSURE PROPER SLOPE AND COVER.
- 3.10 ESTABLISH ELEVATIONS OF EXISTING BURIED PIPING FOR CONNECTION TO NEW WORK TO ENSURE PROPER SLOPE AND COVER.
- 3.11 WHERE PIPE SUPPORT MEMBERS ARE WELDED TO STRUCTURAL BUILDING FRAMING, SCRAPE, BRUSH CLEAN, AND APPLY ONE COAT OF ZINC RICH PRIMER TO WELDING.
- 3.12 EXTEND CLEANOUTS TO FINISHED FLOOR OR WALL SURFACE. LUBRICATE THREADED CLEANOUT PLUGS WITH MIXTURE OF GRAPHITE AND LINSEED OIL. ENSURE CLEARANCE AT CLEANOUT FOR RODDING OF DRAINAGE SYSTEM.
- 3.13 RESET SPRINKLER HEADS FROM UPRIGHT POSITION TO DOWN POSITION TO CENTER OF NEW CEILING TILE.
- 3.14 TORQUE ALL HUBLESS CAST IRON COUPLING IN STRICT ACCORDANCE WITH THE MANUFACTURER'S RECOMMENDATIONS. UTILIZE COUPLING MANUFACTURER'S PRE-SET TORQUE WRENCH.
- 3.15 INSTALL WATER HAMMER SHOCK ARRESTORS AT EACH FIXTURE OR BATTERY OF FIXTURES WHERE QUICK CLOSING VALVES ARE UTILIZED. . ARRESTORS SHALL BE FACTORY FABRICATED AND CONFORM TO ASSE 1010. INSTALL ARRESTORS AND SIZE PER PLUMBING AND DRAINAGE INSTITUTE STANDARD P.D.I. WH-201. ACCEPTABLE MANUFACTURERS ARE ZURN, JOSAM, SIOUX CHIEF. PPP INC. FOR 1-11 FU'S PROVIDE PDI-A, FOR 12-32 FU'S PDI-B, 33-60 FU'S PDI-C, 61-113 FU'S PDI-D. INSTALL PER MANUFACTURER'S INSTRUCTIONS.
- 3.16 ALL CONTRACTORS ARE RESPONSIBLE FOR PROPERLEY FIRE SEALING ALL FIRE RATED PENETRATIONS WITH AN APPROVE UL FIRE RATED PENETRATION INSTALLATION METHOD.

GENERAL NOTES

1. CONTRACTOR SHALL BE RESPONSIBLE FOR PROVIDING ALL NECESSARY FITTINGS AS REQUIRED BY ALL APPLICABLE CODES AND GOVERNING AUTHORITIES.
2. CONTRACTOR SHALL VERIFY AND CORRECT AS REQUIRED TO MEET ALL CODES AND REGULATIONS ANY POSSIBLE DISCREPANCIES BETWEEN TYPE AND SIZE OF CONNECTION SPECIFIED IN PLUMBING FIXTURE SCHEDULE AND FIXTURES ACTUALLY INSTALLED ON THE SITE.
3. ALL DRAINAGE PIPING 3" AND LARGER SHALL HAVE A MINIMUM 1/8" PER FOOT SLOPE. ALL DRAINAGE PIPING 2 1/2" AND SMALLER SHALL HAVE A MINIMUM 1/4" PER FOOT SLOPE, UNLESS OTHERWISE NOTED.
4. VENT PIPING SHOWN ON FLOOR PLANS IS ONLY INDICATIVE EXCEPT FOR VTR LOCATIONS.
5. VALVES AND FITTINGS SHALL BE OF SAME SIZE OF LINE ON WHICH THEY ARE LOCATED, UNLESS OTHERWISE INDICATED ON DRAWINGS.
6. CONTRACTOR SHALL COORDINATE ALL WORK WITH OTHER TRADES.
7. CONTRACTOR SHALL FIELD VERIFY ALL GIVEN MEASUREMENTS PRIOR TO LAYING AND CONNECTING ALL SANITARY AND WASTE PIPING AND NOTIFY ARCHITECT OF ANY DISCREPANCIES.
8. AIR CHAMBERS SHALL NOT BE CONSIDERED AN EQUAL TO WATER ARRESTORS AS SPECIFIED.
9. CONTRACTOR SHALL BE RESPONSIBLE FOR MAINTAINING FIRE RATING AND WEATHERPROOFING INTEGRITY OF ALL PIPING AND PENETRATIONS.
10. ALL WATER SUPPLY AND SANITARY LINES SHALL BE RUN AS CLOSE TO PLANS AS POSSIBLE WITH NO CHANGES IN SIZING.
11. CONTRACTOR SHALL BE RESPONSIBLE FOR PROVIDING ALL NECESSARY SUPPORTING DEVICES FOR ALL FIXTURES INCLUDED IN CONTRACT OR HEREIN SPECIFIED OR OTHERWISE.
12. CHANGES IN THE DIRECTION OF SANITARY PIPING SHALL NOT BE MADE WITH FITTINGS WHICH WILL CAUSE EXCESSIVE REDUCTION IN THE VELOCITY OF FLOW OR CREATE ANY OTHER ADVERSE EFFECT UNLESS PHYSICALLY IMPOSSIBLE (IE: USE OF SANITARY TEE IN A HORIZONTAL CONNECTION, USE OF A DOUBLE SANITARY TEE IN A VERTICAL STACK, IN GENERAL, USE OF SHORT-RADIUS FITTINGS FOR BRANCH TO HOUSE DRAIN OR STACK CONNECTION).
13. ALL DRAINAGE PIPING SHALL BE MARKED WITH THE SEAL OF APPROVAL OF THE NATIONAL SANITATION FOUNDATION.
14. DO NOT PENETRATE FOUNDATIONS WITH PIPING, COORDINATE WITH GENERAL CONTRACTOR TO DROP FOUNDATIONS AS REQUIRED TO CLEAR PLUMBING SERVICES WHERE ABSOLUTELY NECESSARY. ALL PIPING PENETRATING A BEARING WALL OR FOOTING MUST BE SLEEVED AND LOCATION APPROVED BY STRUCTURAL ENGINEER.
15. ROUTE ALL PIPING CONCEALED ABOVE CEILINGS, WITHIN WALLS, OR IN CHASES. PIPING EXPOSED SHALL BE SLOPED AND PAINTED TO MATCH ARCHITECTURAL FINISHES. PIPING IN MECHANICAL ROOMS MAY BE EXPOSED.
16. PROVIDE ACCESS PANELS TO ALL VALVES WITHIN CHASES OR ABOVE NON-ACCESSIBLE CEILINGS. REFER TO ARCHITECTURAL DRAWINGS FOR CEILING TYPES.
17. SEE ARCHITECTURAL DRAWINGS FOR EXACT LOCATIONS OF PLUMBING FIXTURE MOUNTING HEIGHTS, AND DIMENSIONS.
18. CONTRACTOR SHALL VERIFY INVERT ELEVATIONS OF SEWERS TO WHICH NEW SEWER LINES ARE TO BE CONNECTED BEFORE INSTALLATION OF NEW SEWER LINE.
19. ALL VENTS THROUGH ROOF SHALL BE MINIMUM OF 10'-0" FROM ANY AIR INTAKES.
20. CONTRACTOR SHALL INSTALL DIELECTRIC UNIONS AT CONNECTIONS OF DISSIMILAR METALS.
21. CONTRACTOR SHALL SUBMIT SHOP DRAWINGS (INCLUDING PIPE ROUTING AND EQUIPMENT LOCATIONS) TO ARCHITECT/ENGINEER FOR REVIEW AND APPROVAL PRIOR TO THE INSTALLATION OR PURCHASING OF ANY PIPING AND/OR EQUIPMENT.
22. PROVIDE 1/2" C.W. SUPPLY WITH ANGLE STOP AND FLEXIBLE SUPPLY TO REFRIGERATORS WITH ICE MAKERS AT HEIGHT REQUIRED BY MANUFACTURER OF EQUIPMENT INSTALLED.
23. PROVIDE 1/2" H.W. SUPPLY WITH ANGLE STOP AND FLEXIBLE SUPPLY TO DISHWASHER MACHINE, AT HEIGHT REQUIRED BY MANUFACTURER OF EQUIPMENT INSTALLED.
24. ALL WATER PIPING INSTALLED IN EXTERIOR WALLS SHALL BE PLACED ON THE INTERIOR SIDE OF THE WALL, SO THAT WALL INSULATION CAN BE PLACED ON THE EXTERIOR SIDE OF THE PIPING.
25. FIELD VERIFICATION OF EXISTING PIPING: ALL EXISTING PIPING SHOWN ON THE CONSTRUCTION DOCUMENTS IS BASED OFF OF VISUAL SITE INVESTIGATION AND AS BUILTS DRAWINGS OF THE EXISTING SITE AND BUILDING CONSTRUCTION. IT IS THE RESPONSIBILITY OF THE LICENSED PLUMBING CONTRACTOR TO FIELD VERIFY ALL EXISTING PIPING LOCATIONS, TYPES, SIZES, ELEVATIONS AND INVERTS. NOTIFY ENGINEER IF THE CONDITIONS ARE NOT AS SHOWN ON THE PLANS OR AS STATED IN THE SPECIFICATIONS PRIOR TO THE INITIATION OF ANY WORK. IDENTIFICATION AND VERIFICATION OF EXISTING PIPING TO BE ACCOMPLISHED BY THE FOLLOWING MEANS:
    - MANDATORY DYE TESTING OF ALL EXISTING SANITARY, STORM AND GREASE WASTE PIPING FOR SYSTEM IDENTIFICATION.
    - SNAKE ALL SANITARY, STORM AND GREASE WASTE PIPING FOR A DISTANCE OF 100 FEET AND REPORT ANY BLOCKAGES.
    - TEST WATER PRESSURE TO INSURE MINIMUM PSI MATCHES MOST DEMANDING EQUIPMENT SUPPLIED OR TO BE INSTALLED.
    - ALL IDENTIFICATION AND VERIFICATION RESULTS SHALL BE SUBMITTED TO THE ARCHITECT/ENGINEER FOR REVIEW PRIOR TO THE INITIATION OF ANY WORK.
26. IF NO PLUMBING ELEVATION OR INVERT IS NOTED ON PLANS THE MINIMUM DEPTH OF THE PLUMBING TO CIVIL CONNECTION SHALL BE CALCULATED BASED ON THE FURTHERS POSSIBLE PLUMBING FIXTURE DISTANCE TIMES 1%. TOTAL LINE LENGTH*1%=DEPTH B.F.F. AT CIVIL POINT OF CONNECTION.

U.S. DEPARTMENT OF HOUSING AND URBAN DEVELOPMENT

ISSUE HISTORY

No.	Date	Description
1	04/15/22	Permit Submission

REVISION HISTORY

No.	Date	Description

FUGLEBERG KOCH

2555 Temple Trail, Winter Park, FL 32789 (407) 629-0595
www. fuglebergkoch.com AA26002103

CONSULTANT

Joseph, Lawrence & Co
Consulting Engineers
1180 HARWOOD AVE. SUITE 3000
ALTAMONTE SPRINGS, FLORIDA 32714
TEL: 321.972.4466
WWW.JLCENG.COM
CA NO. 4050 - E

JLC 22.0023.00

ALABAMA LICENSED No. 33858 PROFESSIONAL ENGINEER ADAM J. BARNEY

THE MADISON

HUNTSVILLE, AL

Drawn:	MJR/SMB
Checked:	BLS/AJB
Approval:	BLS/AJB
Date:	04/15/2022
Project #:	5722

SYMBOL LEGEND & GENERAL NOTES PLUMBING

P0.01

© 2018 These documents and their contents are the property of FUGLEBERG KOCH - AA26002103, and are issued only for the specific project noted on these drawings. Any reproductions, revisions, or modifications of these documents without the expressed written consent of Fugleberg Koch is prohibited by law.

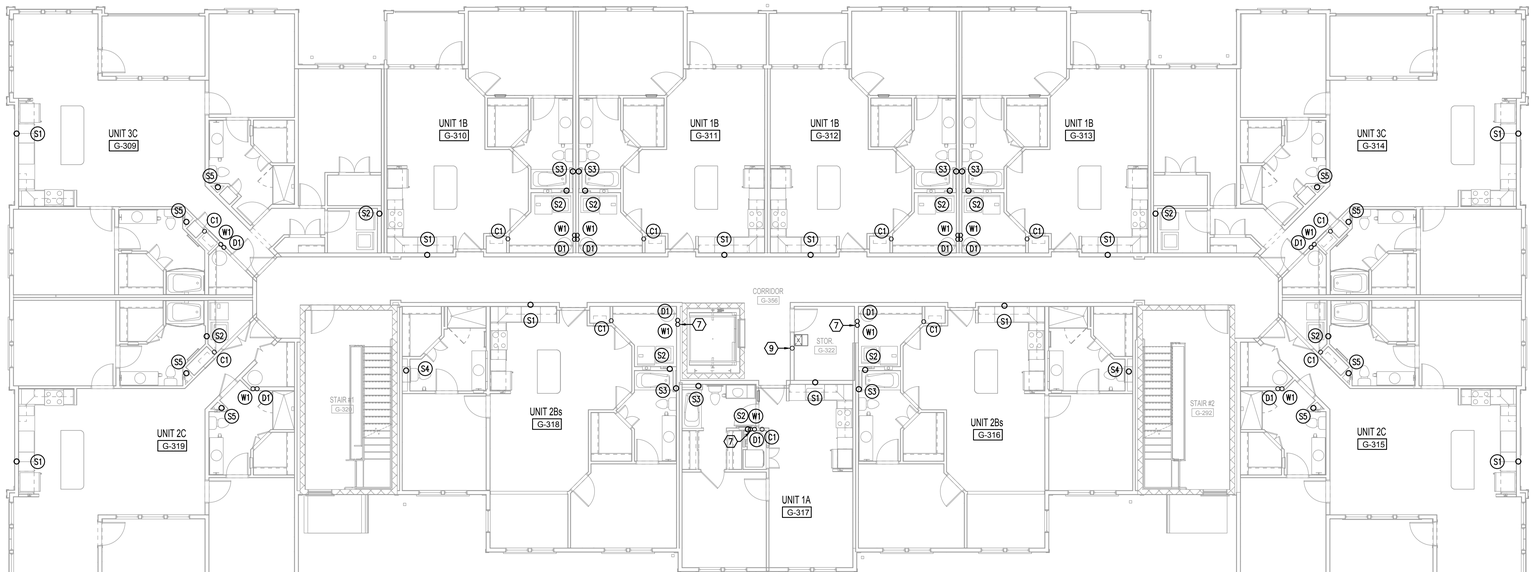

F1 BUILDING TYPE B - 2ND LEVEL - PLUMBING

1/8" = 1'-0"

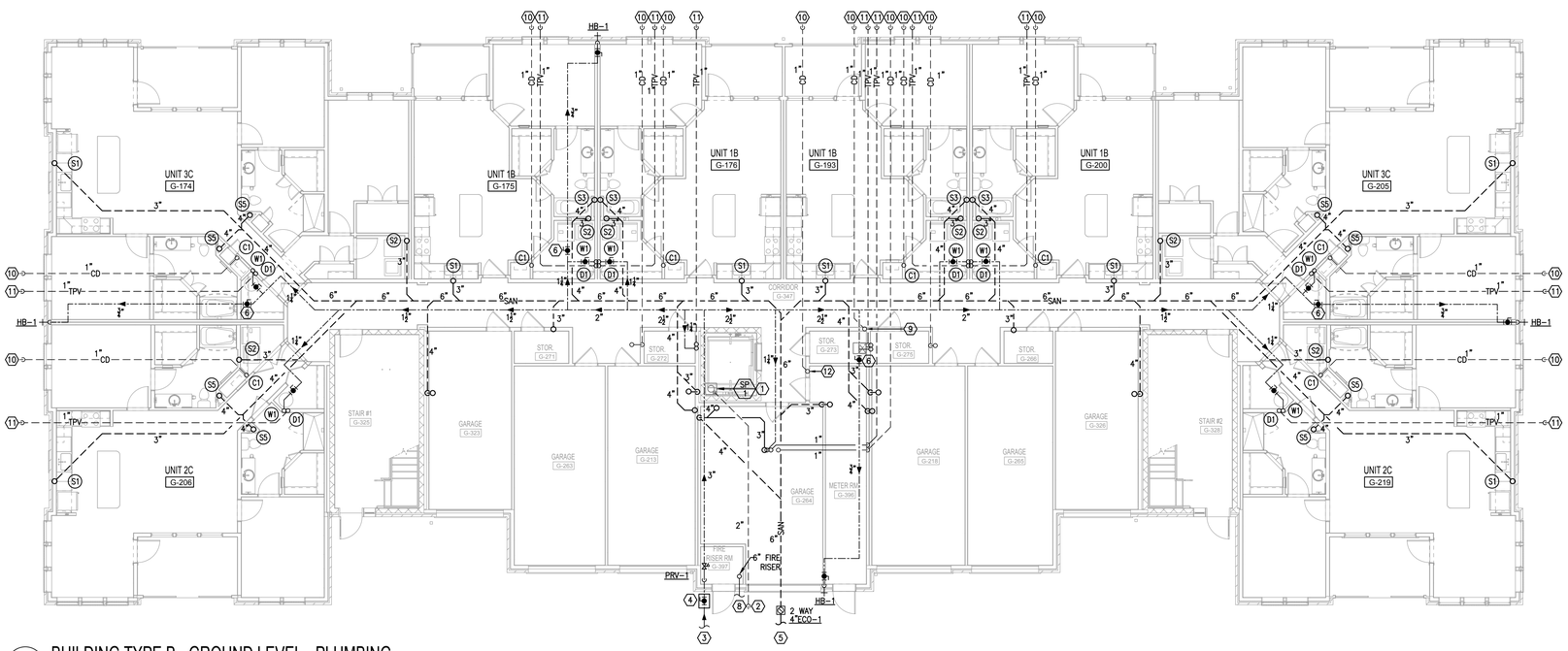

K1 BUILDING TYPE B - GROUND LEVEL - PLUMBING

1/8" = 1'-0"

GENERAL NOTES:

1. PROVIDE WALL CLEAN OUTS AT THE BASE OF ALL SANITARY STACKS, CONDENSATE STACKS, AND RAIN LEADERS 30" AFF. WHERE A HORIZONTAL DRAINAGE PIPE HAS A CHANGE OF HORIZONTAL DIRECTION GREATER THAN 45 DEGREES, A CLEANOUT SHALL BE INSTALLED AT THE CHANGE OF DIRECTION. WHERE MORE THAN ONE CHANGE OF HORIZONTAL DIRECTION GREATER THAN 45 DEGREES OCCURS WITHIN 40 FEET OF DEVELOPED LENGTH OF PIPING, THE CLEANOUT INSTALLED FOR THE FIRST CHANGE OF DIRECTION SHALL SERVE AS THE CLEANOUT FOR ALL CHANGES IN DIRECTION WITHIN THAT 40 FEET OF DEVELOPED LENGTH OF PIPING.
2. PROVIDE SHUT-OFF VALVE AT THE BASE OF EVERY WATER RISER. ALL SHUT-OFF VALVES SHALL BE FULLY ACCESSIBLE. SEE ARCHITECTURAL DRAWINGS FOR RATED WALLS AND CEILINGS, AND PROVIDE RATED ACCESS PANELS.
3. SEE SHEET P4.01 FOR RISER DIAGRAMS.
4. PROVIDE TRAP PRIMER VALVES TPV-1 WITH SHUT OFF VALVE AND ¼" CW SUPPLY TO EACH FLOOR DRAIN. ALL VALVES SHALL BE FULLY ACCESSIBLE.
5. INSTALL WATER HAMMER SHOCK ARRESTORS AT ICE MAKERS, DISHWASHERS. WASHER BOXES, AND AT ALL QUICK CLOSING SOLENOID VALVES. SIZE SHOCK ARRESTORS PER PLUMBING AND DRAINAGE INSTITUTE STANDARD P.D.I. WH-201. SHOCK ARRESTORS SHALL CONFORM TO ASSE 1010. ACCEPTABLE MANUFACTURERS – SIOUX CHIEF, PRECISION PLUMBING PRODUCTS INC., FOR 1-11 F.U.'S PROVIDE PDI-A, 12-32 F.U.'S PDI-B, 33-60 F.U.'S PDI-C. INSTALL PER MANUFACTURER'S INSTRUCTIONS.
6. ALL FREEZE PROOF WALL HYDRANTS/HOSE BIBS TO BE COORDINATED WITH WALL THICKNESS TO ENSURE PROPER INSTALLATION DEPTH PRIOR TO CONSTRUCTION.

PLUMBING FIXTURE UNIT CALCULATION

TYPE OF SERVICE	WATER	SANITARY
FIXTURE UNIT COUNT TOTAL	401	561
TOTAL GALLONS PER MINUTE	105	--
SIZE OF SERVICE CONNECTION	3"	6"

REFERENCE NOTES: ⟨X⟩

1. ELEVATOR SUMP PUMP. SEE SCHEDULE AND DETAIL.
2. ROUTE SUMP PUMP DISCHARGE BELOW GRADE TO EXTERIOR AND TERMINATE ABOVE GROUND WITH WEATHERPROOF GOOSENECK FITTING.
3. 3" POTABLE CW SUPPLY BELOW GRADE, FOR CONTINUATION SEE CIVIL DRAWINGS.
4. SHUT-OFF VALVE AND WATER METER IN CAST IRON ACCESS BOX FLUSH WITH PAVEMENT.
5. 6" SANITARY SEWER BELOW GRADE FOR CONTINUATION SEE CIVIL DRAWINGS. INV. EL. = (-3'-6" BFF)
6. SHUT-OFF VALVE WITHIN RATTED ACCESS PANEL, TYPICAL.
7. PROVIDE RISER SHUT-OFF VALVE WITHIN CLOSET.
8. 6" FIRE SPRINKLER SUPPLY BELOW GROUND, FOR CONTINUATION SEE CIVIL DRAWINGS.
9. ¾" CONDENSATE DRAIN CONNECTION TO AC UNIT. 1" CONDENSATE DRAIN DOWN.
10. TERMINATE CONDENSATE DRAIN PIPING ABOVE GRADE AT EXTERIOR WITH SCREENED WEATHERPROOF FITTING, SEE DETAIL.
11. TERMINATE WATER HEATER DRAIN PAN PIPING ABOVE GRADE AT EXTERIOR.
12. 1" CONDENSATE DRAIN DOWN.

U.S. DEPARTMENT OF HOUSING AND URBAN DEVELOPMENT

ISSUE HISTORY

No.	Date	Description
1	04/15/22	Permit Submission

REVISION HISTORY

No.	Date	Description

FUGLEBERG KOCH
2555 Temple Trail, Winter Park, FL 32789 (407) 629-0595
www.fuglebergkoch.com AA26002103

CONSULTANT
Joseph, Lawrence & Co
Consulting Engineers
1180 HARWOOD AVE. SUITE 3000
ALTAMONTE SPRINGS, FLORIDA 32714
TEL: 321.972.4466
WWW.JLCENG.COM
CA NO. 4050 - E

JLC 22.0023.00

A. B. BAKER No. 53885 PROFESSIONAL ENGINEER STATE OF FLORIDA

Drawn:	MJR/SMB
Checked:	BLS/AJB
Approved:	BLS/AJB
Date:	04/15/2022
Project #	5722

THE MADISON
HUNTSVILLE, AL

BUILDING TYPE B
GROUND & 2ND LEVEL
PLUMBING

P2.04

© 2015 These documents and their contents are the property of FUGLEBERG KOCH - AA26002103, and are to be used only for the specific project for which they were prepared. Any reproduction, reuse, or modification of these documents without the expressed written consent of Fugleberg Koch is prohibited by law.

REFERENCE NOTES: (X)

(1) ¾" CONDENSATE DRAIN CONNECTION TO AC UNIT. 1" CONDENSATE DRAIN DOWN.

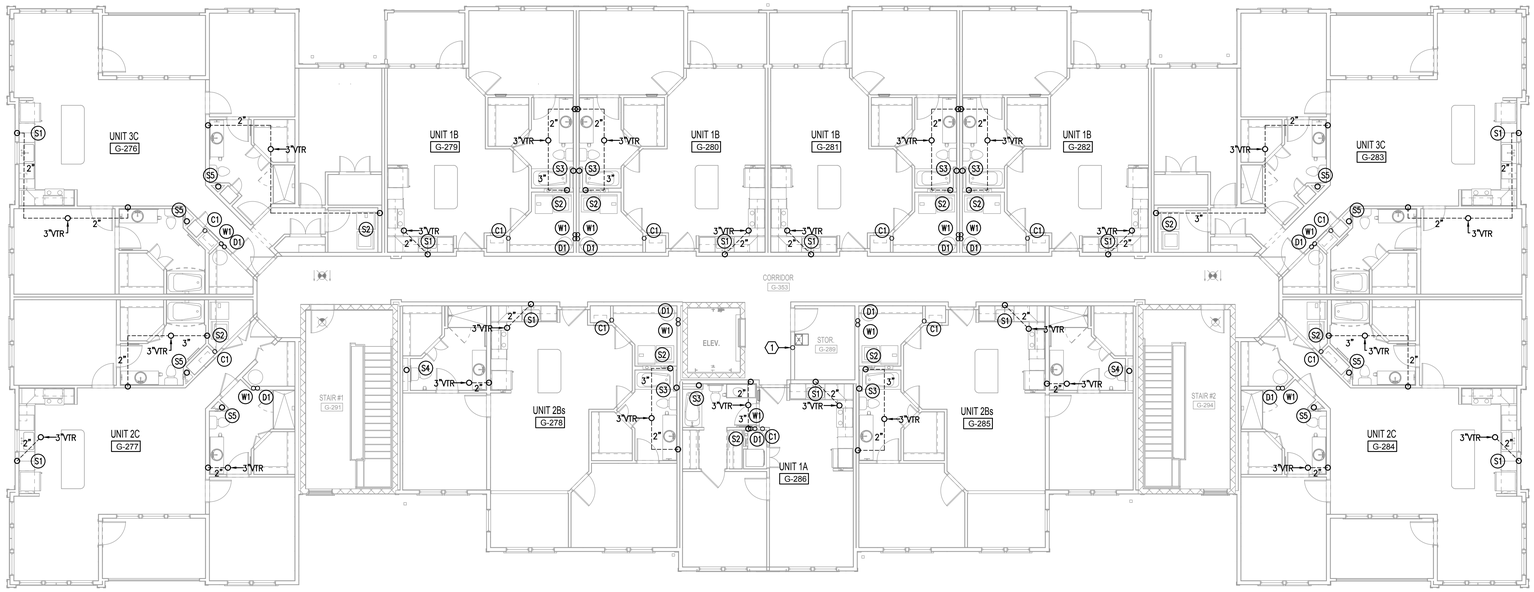

F1 BUILDING TYPE B - 4TH LEVEL - PLUMBING
1/8" = 1'-0"

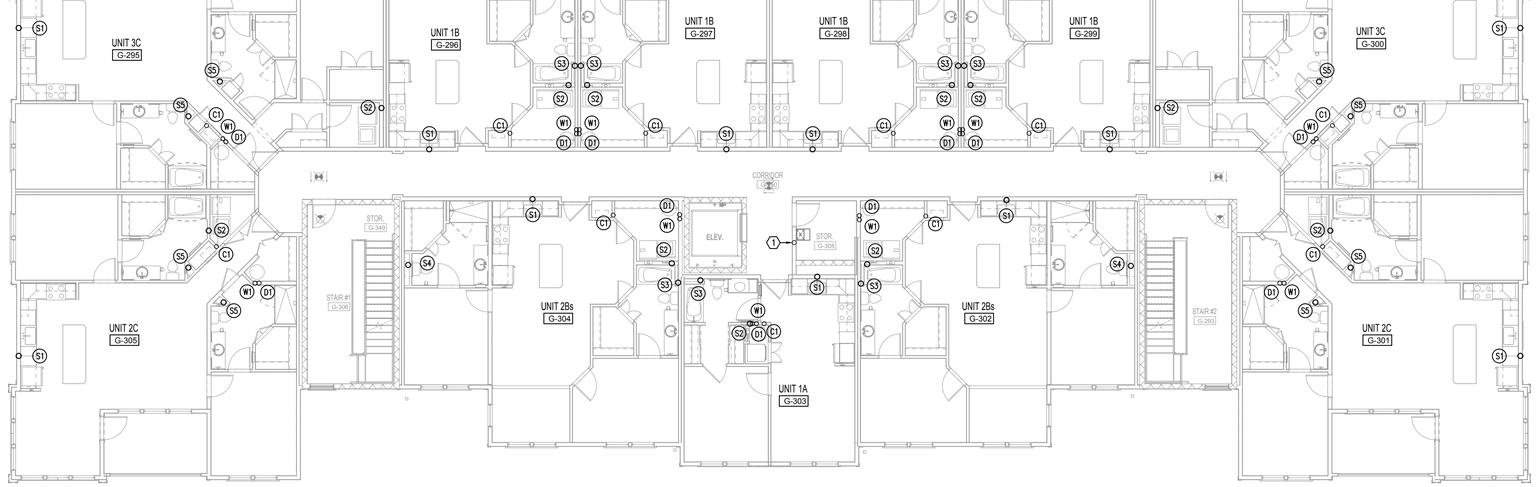

K1 BUILDING TYPE B - 3RD LEVEL - PLUMBING
1/8" = 1'-0"

U.S. DEPARTMENT OF HOUSING AND URBAN DEVELOPMENT

ISSUE HISTORY

No.	Date	Description
1	04/15/22	Permit Submission

REVISION HISTORY

No.	Date	Description

© 2018 These documents and their contents are the property of FUGLEBERG KOCH - AA26002103, and are issued only for the specific project noted on these drawings. Any reproductions, revisions, or modifications of these documents without the expressed written consent of Fugleberg Koch is prohibited by law.

FUGLEBERG KOCH
2555 Temple Trail, Winter Park, FL 32789 (407) 629-0595
www.fuglebergkoch.com AA26002103

CONSULTANT
Joseph, Lawrence & Co
Consulting Engineers
1180 HARWOOD AVE. SUITE 3000
ALTAMONTE SPRINGS, FLORIDA 32714
TEL: 321.972.4466
WWW.JLCENG.COM
CA NO. 4050 - E

JLC 22.0023.00

LABOUR
LICENSED
No. 33850
PROFESSIONAL
ENGINEER
ADAM L. BARNEY

THE MADISON
HUNTSVILLE, AL

Drawn:	MJR/SMB
Checked:	BLS/AJB
Approval:	BLS/AJB
Date:	04/15/2022
Project #:	5722

BUILDING TYPE B
3RD & 4TH LEVEL
PLUMBING

P2.05

REFERENCE NOTES

1. SEE ARCH. DRAWINGS FOR CONTINUATION/MORE INFORMATION ON GUTTERS/SCUPPER DRAINS.

GENERAL NOTES:

A. ALL PLUMBING VENTS TO BE A MINIMUM OF 10'-0" AWAY FROM ANY OUTSIDE AIR INTAKE. FIELD COORDINATE EXACT LOCATIONS.

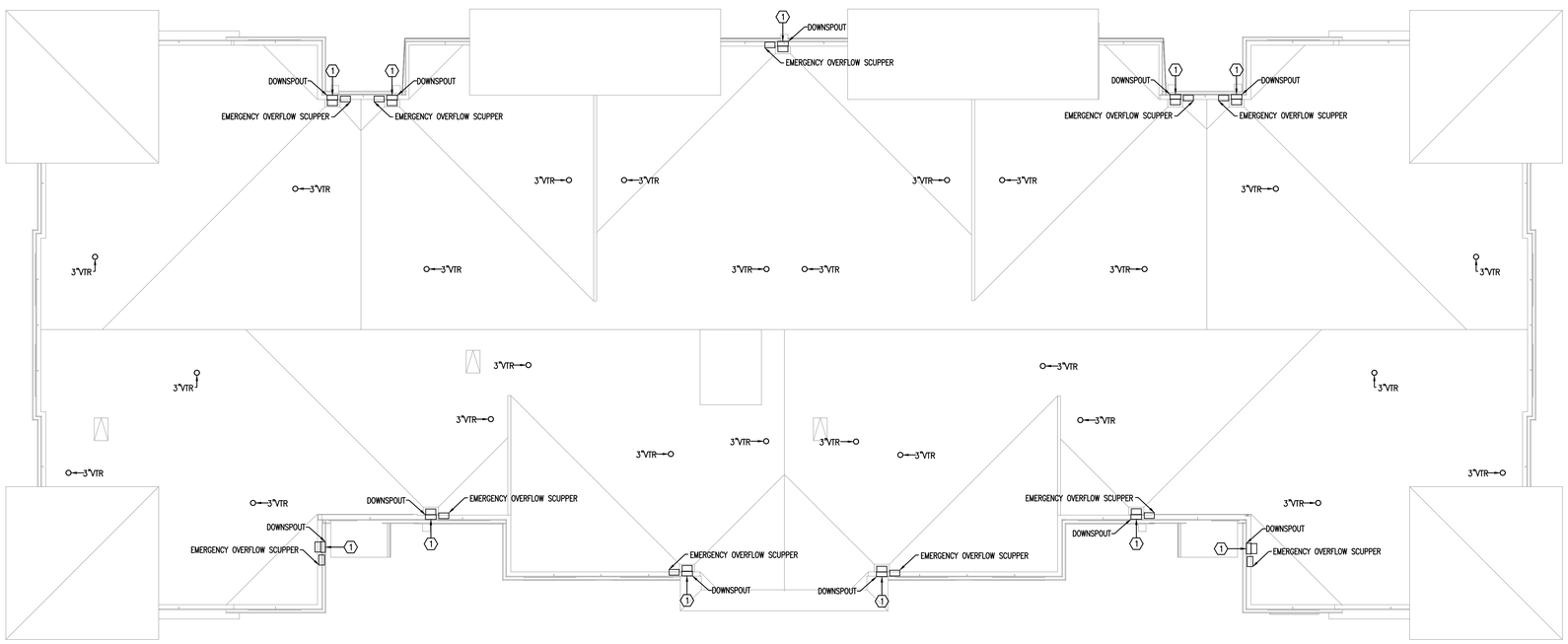

K1 BUILDING TYPE B - ROOF PLAN - PLUMBING
1/8" = 1'-0"

U.S. DEPARTMENT OF HOUSING AND URBAN DEVELOPMENT

ISSUE HISTORY

No.	Date	Description
1	04/15/22	Permit Submission

REVISION HISTORY

No.	Date	Description

FUGLEBERG KOCH
2555 Temple Trail, Winter Park, FL 32789 (407) 629-0595
www.fuglebergkoch.com AA26002103

CONSULTANT
Joseph, Lawrence & Co
Consulting Engineers
1180 HARWOOD AVE. SUITE 3000
ALTAMONTE SPRINGS, FLORIDA 32714
TEL: 321.972.4466
WWW.JLCENG.COM
CA NO. 4050 - E

JLC 22.0023.00

LABOUR
LICENSED
No. 33850
PROFESSIONAL
ENGINEER
ADAM BARNEY

THE MADISON
HUNTSVILLE, AL

Drawn:	MJR/SMB
Checked:	BLS/AJB
Approval:	BLS/AJB
Date:	04/15/2022
Project #:	5722

BUILDING TYPE B
ROOF PLAN
PLUMBING

P2.06

© 2018 These documents and their contents are the property of FUGLEBERG KOCH - AA26002103, and are issued only for the specific project noted on these drawings. Any reproductions, revisions, or modifications of these documents without the expressed written consent of Fugleberg Koch is prohibited by law.

REFERENCE NOTES: ⓧ

1. COLD WATER RISER WITH UNIT SHUT-OFF VALVE & REMOTE READ SUB-METER. CONTRACTOR TO INSTALL SUB-METER FURNISHED BY OWNER. SEE BUILDING PLAN FOR RISER TAG.
2. ELECTRIC WATER HEATER, SEE SCHEDULE & DETAIL.
3. WATER HEATER PAN DRAIN RISER. SEE BUILDING PLANS & RISER DIAGRAMS.
4. A/C CONDENSATE DRAIN RISER. SEE BUILDING PLANS & RISER DIAGRAMS.
5. ½" HW TO DISHWASHER WITH SHUT-OFF VALVE AND ASSE 1024 DUAL CHECK BACKFLOW DEVICE WATTS NO. SD-2. CONNECT DISHWASHER DRAIN TO DISPOSER.

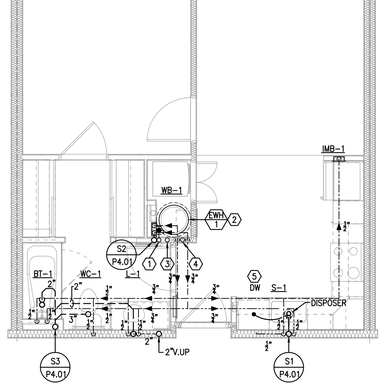

G5 UNIT 1A - PLUMBING
1/4" = 1'-0"

U.S. DEPARTMENT OF HOUSING AND URBAN DEVELOPMENT

ISSUE HISTORY

No.	Date	Description
1	04/15/22	Permit Submission

REVISION HISTORY

No.	Date	Description

FUGLEBERG KOCH
2555 Temple Trail, Winter Park, FL 32789 (407) 629-8595
www. fuglebergkoch.com AA26002103

CONSULTANT
Joseph, Lawrence & Co
Consulting Engineers
1180 HARWOOD AVE. SUITE 3000
ALTAMONTE SPRINGS, FLORIDA 32714
TEL. 321.972.4466
WWW.JLCENG.COM
CA NO. 4050 - E

JLC 22.0023.00

STATE OF FLORIDA No. 73885 PROFESSIONAL ENGINEER BRIAN L. SCHMIDT

Drawn:	MJR/SMB
Checked:	BLS/AJB
Approval:	BLS/AJB
Date:	04/15/2022
Project #	5722

THE MADISON
HUNTSVILLE, AL

ENLARGED UNIT PLANS
PLUMBING

P3.01

© 2015 These documents and their contents are the property of FUGLEBERG KOCH - AA26002103. NOR are to be used for any other project without the expressed written consent of Fugleberg Koch is prohibited by law.

REFERENCE NOTES: ⓧ

1. COLD WATER RISER WITH UNIT SHUT-OFF VALVE & REMOTE READ SUB-METER. CONTRACTOR TO INSTALL SUB-METER FURNISHED BY OWNER. SEE BUILDING PLAN FOR RISER TAG.
2. ELECTRIC WATER HEATER, SEE SCHEDULE & DETAIL.
3. WATER HEATER PAN DRAIN RISER. SEE BUILDING PLANS & RISER DIAGRAMS.
4. A/C CONDENSATE DRAIN RISER. SEE BUILDING PLANS & RISER DIAGRAMS.
5. ½" HW TO DISHWASHER WITH SHUT-OFF VALVE AND ASSE 1024 DUAL CHECK BACKFLOW DEVICE WATTS NO. SD-2. CONNECT DISHWASHER DRAIN TO DISPOSER.

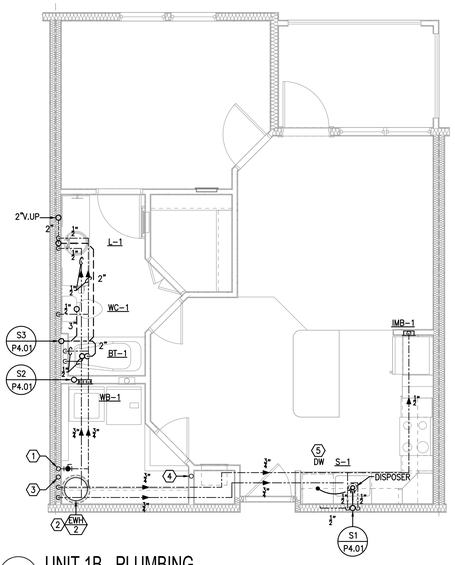

G5 UNIT 1B - PLUMBING
1/4" = 1'-0"

ISSUE HISTORY

No.	Date	Description
1	04/15/22	Permit Submission

REVISION HISTORY

No.	Date	Description

FUGLEBERG KOCH
2555 Temple Trail, Winter Park, FL 32789 (407) 629-0595
www.fuglebergkoch.com AA26002103

CONSULTANT
Joseph, Lawrence & Co
Consulting Engineers
1180 HARWOOD AVE. SUITE 3000
ALTAMONTE SPRINGS, FLORIDA 32714
TEL: 321.972.4466
WWW.JLCENG.COM
CA NO. 4050 - E

JLC 22.0023.00

Drawn:	MJR/SMB
Checked:	BLS/AJB
Approval:	BLS/AJB
Date:	04/15/2022
Project #:	5722

THE MADISON
HUNTSVILLE, AL

ENLARGED UNIT PLANS
PLUMBING

P3.02

REFERENCE NOTES: ⓧ

1. COLD WATER RISER WITH UNIT SHUT-OFF VALVE & REMOTE READ SUB-METER. CONTRACTOR TO INSTALL SUB-METER FURNISHED BY OWNER. SEE BUILDING PLAN FOR RISER TAG.
2. ELECTRIC WATER HEATER, SEE SCHEDULE & DETAIL.
3. WATER HEATER PAN DRAIN RISER. SEE BUILDING PLANS & RISER DIAGRAMS.
4. A/C CONDENSATE DRAIN RISER. SEE BUILDING PLANS & RISER DIAGRAMS.
5. ½" HW TO DISHWASHER WITH SHUT-OFF VALVE AND ASSE 1024 DUAL CHECK BACKFLOW DEVICE WATTS NO. SD-2. CONNECT DISHWASHER DRAIN TO DISPOSER.

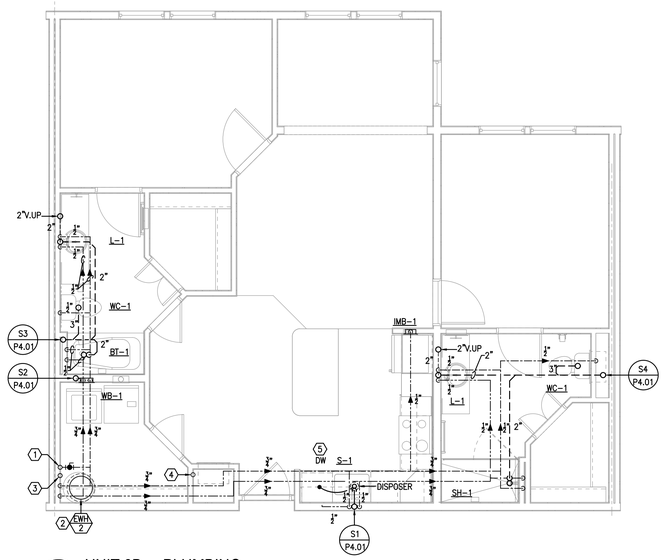

G5 UNIT 2Bs - PLUMBING
1/4" = 1'-0"

ISSUE HISTORY

No.	Date	Description
1	04/15/22	Permit Submission

REVISION HISTORY

No.	Date	Description

FUGLEBERG KOCH
2555 Temple Trail, Winter Park, FL 32789 (407) 629-0595
www.fuglebergkoch.com AA26002103

CONSULTANT
Joseph, Lawrence & Co
Consulting Engineers
1180 HARWOOD AVE. SUITE 3000
ALTAMONTE SPRINGS, FLORIDA 32714
TEL: 321.972.4466
WWW.JLCENG.COM
CA NO. 4050 - E

JLC 22.0023.00

THE MADISON
HUNTSVILLE, AL

Drawn:	MJR/SMB
Checked:	BLS/AJB
Approval:	BLS/AJB
Date:	04/15/2022
Project #:	5722

ENLARGED UNIT PLANS
PLUMBING

P3.05

© 2016 These documents and their contents are the property of FUGLEBERG KOCH - AA26002103, and are issued only for the specific project noted on these drawings. Any reproductions, revisions, or modifications of these documents without the expressed written consent of Fugleberg Koch is prohibited by law.

REFERENCE NOTES: ⓧ

1. COLD WATER RISER WITH UNIT SHUT-OFF VALVE & REMOTE READ SUB-METER. CONTRACTOR TO INSTALL SUB-METER FURNISHED BY OWNER. SEE BUILDING PLAN FOR RISER TAG.
2. ELECTRIC WATER HEATER, SEE SCHEDULE & DETAIL.
3. WATER HEATER PAN DRAIN RISER. SEE BUILDING PLANS & RISER DIAGRAMS.
4. A/C CONDENSATE DRAIN RISER. SEE BUILDING PLANS & RISER DIAGRAMS.
5. ½" HW TO DISHWASHER WITH SHUT-OFF VALVE AND ASSE 1024 DUAL CHECK BACKFLOW DEVICE WATTS NO. SD-2. CONNECT DISHWASHER DRAIN TO DISPOSER.
6. HOT WATER CIRCULATION PUMP, SEE SCHEDULE & DETAIL.

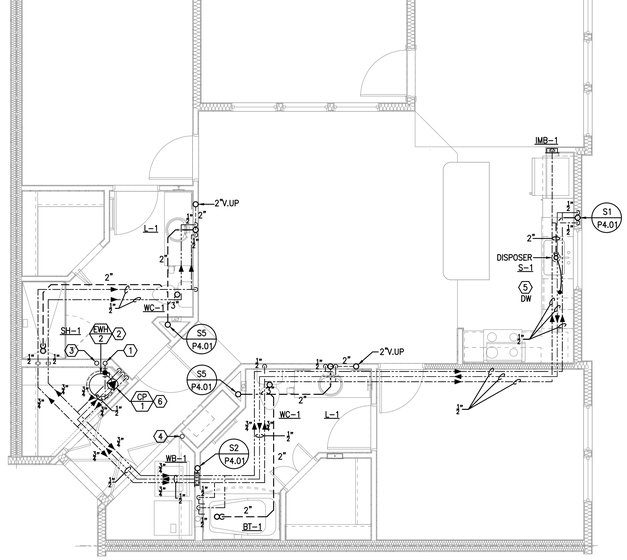

G5 UNIT 2C - PLUMBING
1/4" = 1'-0"

ISSUE HISTORY

No.	Date	Description
1	04/15/22	Permit Submission

REVISION HISTORY

No.	Date	Description

FUGLEBERG KOCH
2555 Temple Trail, Winter Park, FL 32789 (407) 629-0595
www. fuglebergkoch.com AA26002103

CONSULTANT
Joseph, Lawrence & Co
Consulting Engineers
1180 HARWOOD AVE. SUITE 3000
ALTAMONTE SPRINGS, FLORIDA 32714
TEL. 321.972.4466
WWW.JLCENG.COM
CA NO. 4050 - E

JLC 22.0023.00

Drawn:	MJR/SMB
Checked:	BLS/AJB
Approved:	BLS/AJB
Date:	04/15/2022
Project #	5722

THE MADISON
HUNTSVILLE, AL

ENLARGED UNIT PLANS
PLUMBING

P3.06

© 2019 These documents and their contents are the property of FUGLEBERG KOCH - AA26002103, and are issued only for the specific project shown herein. Any reproductions, revisions, or modifications of these documents without the expressed written consent of Fugleberg Koch is prohibited by law.

REFERENCE NOTES: ⓧ

1. COLD WATER RISER WITH UNIT SHUT-OFF VALVE & REMOTE READ SUB-METER. CONTRACTOR TO INSTALL SUB-METER FURNISHED BY OWNER. SEE BUILDING PLAN FOR RISER TAG.
2. ELECTRIC WATER HEATER, SEE SCHEDULE & DETAIL.
3. WATER HEATER PAN DRAIN RISER. SEE BUILDING PLANS & RISER DIAGRAMS.
4. A/C CONDENSATE DRAIN RISER. SEE BUILDING PLANS & RISER DIAGRAMS.
5. ½" HW TO DISHWASHER WITH SHUT-OFF VALVE AND ASSE 1024 DUAL CHECK BACKFLOW DEVICE WATTS NO. SD-2. CONNECT DISHWASHER DRAIN TO DISPOSER.
6. HOT WATER CIRCULATION PUMP, SEE SCHEDULE & DETAIL.

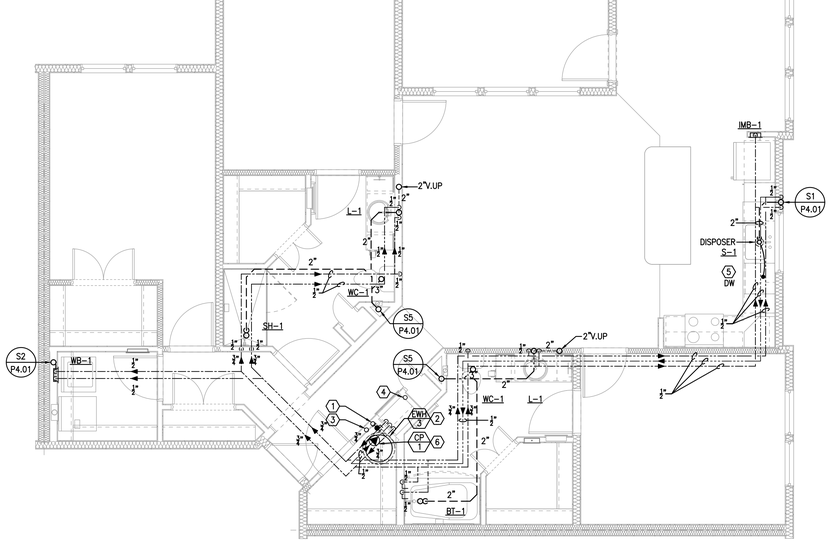

G5 UNIT 3C - PLUMBING
1/4" = 1'-0"

U.S. DEPARTMENT OF HOUSING AND URBAN DEVELOPMENT

ISSUE HISTORY

No.	Date	Description
1	04/15/22	Permit Submission

REVISION HISTORY

No.	Date	Description

© 2015 These documents and their contents are the property of FUGLEBERG KOCH. AA26002103. and are loaned only for the specific project noted. Reproduction of these drawings, in whole or in part, by any means, without the express written consent of Fugleberg Koch is prohibited by law.

FUGLEBERG KOCH
2555 Temple Trail, Winter Park, FL 32789 (407) 629-0595
www.fuglebergkoch.com AA26002103

CONSULTANT
Joseph, Lawrence & Co
Consulting Engineers
1180 HARWOOD AVE. SUITE 3000
ALTAMONTE SPRINGS, FLORIDA 32714
TEL: 321.972.4466
WWW.JLCENG.COM
CA NO. 4050 - E

JLC 22.0023.00

A. B. BRAGG
No. 23885
PROFESSIONAL
ENGINEER
ALABAMA

Drawn:	MJR/SMB
Checked:	BLS/ABB
Approval:	BLS/ABB
Date:	04/15/2022
Project #	5722.

THE MADISON
HUNTSVILLE, AL

ENLARGED UNIT PLANS
PLUMBING

P3.07

REFERENCE NOTES:

1. ¾" CW & HW TO UNIT. CONNECT TO PLUMBING FIXTURES WITHIN UNIT.
2. ELECTRIC WATER HEATER. REFER TO WATER HEATER SCHEDULE AND DETAIL.
3. DRAIN PAN PIPING DISCHARGE TO BUILDING EXTERIOR, TERMINATE ABOVE GRADE A MIN OF 1'-0" AWAY FROM BUILDING. REFER TO PLUMBING DETAILS.
4. CONDENSATE DRAIN PIPING DISCHARGE TO BUILDING EXTERIOR, TERMINATE ABOVE GRADE A MIN OF 1'-0" AWAY FROM BUILDING. REFER TO PLUMBING DETAILS.
5. CONDENSATE DRAIN PIPING FROM AC UNIT.

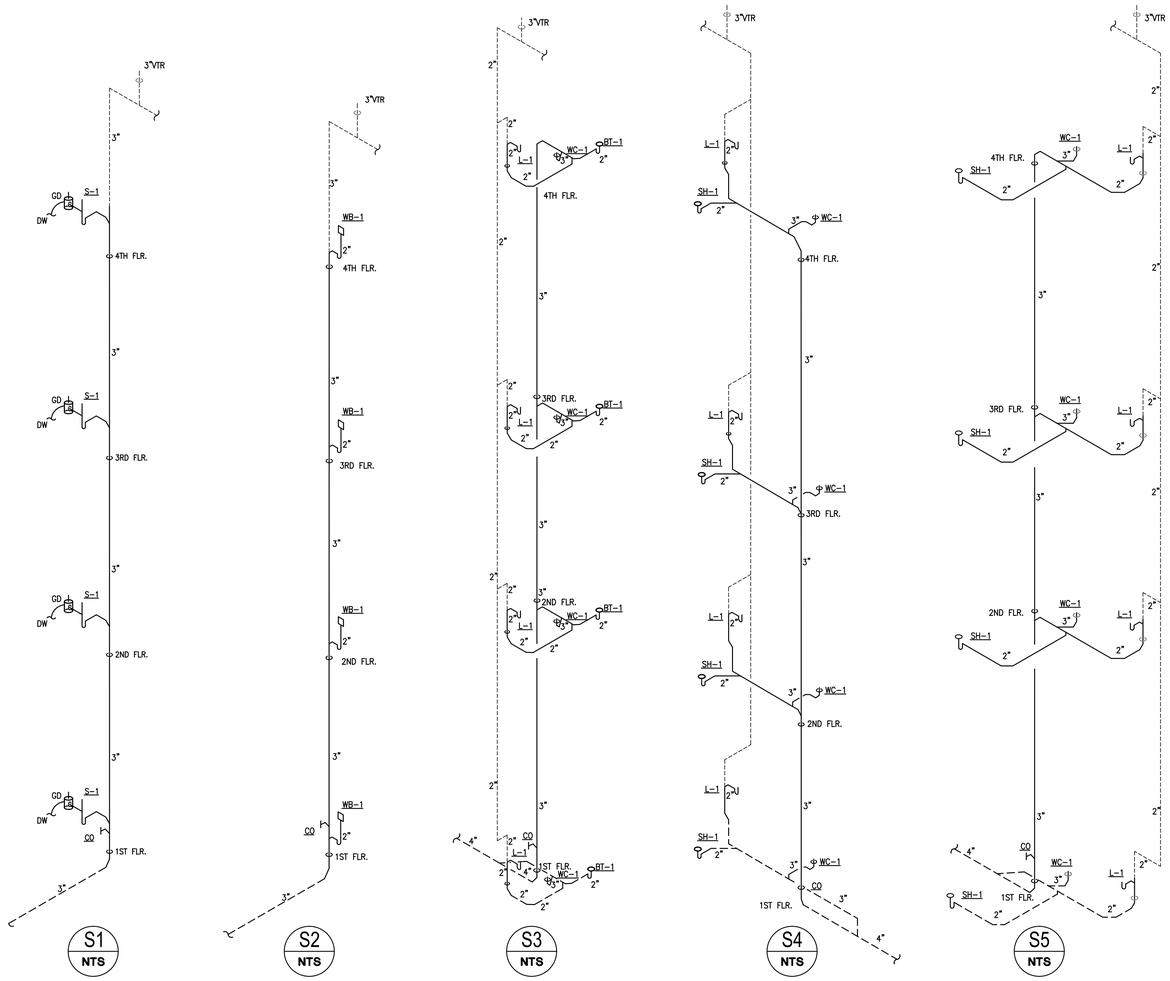

SANITARY RISER DIAGRAMS
NTS

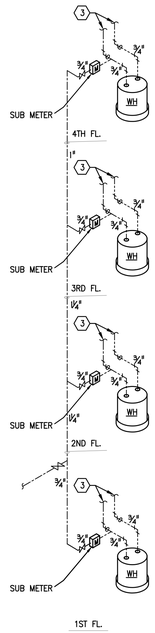

W1 NTS WATER RISER DIAGRAM

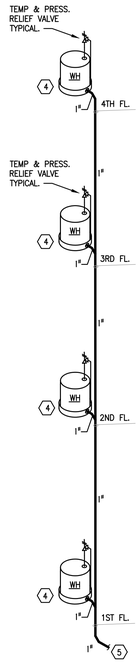

D1 NTS PAN DRAIN RISER DIAGRAM

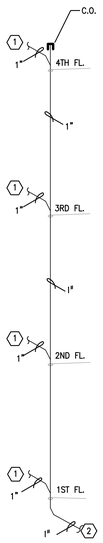

C1 NTS CONDENSATE RISER DIAGRAM

ISSUE HISTORY

No.	Date	Description
1	04/15/22	Permit Submission

REVISION HISTORY

No.	Date	Description

FUGLEBERG KOCH
2555 Temple Trail, Winter Park, FL 32789 (407) 629-0595
www.fuglebergkoch.com AA26002103

CONSULTANT
Joseph, Lawrence & Co
Consulting Engineers
1180 HARWOOD AVE. SUITE 3000
ALTAMONTE SPRINGS, FLORIDA 32714
TEL: 321.972.4466
WWW.JLCENG.COM
CA NO. 4050 - E

JLC 22.0023.00

Drawn:	MJR/SMB
Checked:	BLS/AJB
Approval:	BLS/AJB
Date:	04/15/2022
Project #:	5722

THE MADISON
HUNTSVILLE, AL

RISER DIAGRAMS
PLUMBING

P4.01

GENERAL NOTES:

A. ALL PLUMBING FIXTURES MUST BE REVIEWED AND APPROVED BY THE ARCHITECT/OWNER/BRAND PRIOR TO ORDERING.
B. CONTRACTOR TO VERIFY ALL BATHTUB AND SHOWER SIZES, INCLUDING DRAIN LOCATIONS, WITH ARCHITECT PRIOR TO ORDERING.
C. CONTRACTOR TO VERIFY LAVATORY AND SINK SIZES ARE COORDINATED WITH COUNTERTOPS BEING INSTALLED PRIOR TO ORDERING.
D. CONTRACTOR TO VERIFY ALL PLUMBING EQUIPMENT SELECTED FITS WITHIN DESIGNATED SPACE SHOWN ON PLUMBING PLANS AND PROVIDES REQUIRED CLEARANCE AS LISTED BY MANUFACTURER.
E. CONTRACTOR SHALL COORDINATE VOLTAGE AND PHASE OF EACH PIECE OF EQUIPMENT WITH THE ELECTRICAL CONTRACTOR PRIOR TO ORDERING.

PLUMBING SPECIALTIES SCHEDULE - APARTMENT

MARK	FIXTURE	WASTE	TRAP	VENT	COLD WATER	HOT WATER	MANUFACTURER /MODEL #	DESCRIPTION
WB-1	WASHER BOX	–	–	–	–	–	SIOUX CHIEF STANDARD: 696-2313CF FIRE RATED: 696R2313CF	ABS BOX 5-1/2" HIGH x 4" WIDE. 5/8" O.D. COMPRESSION ANGLE VALVE. SUPPLY CONNECTION SIZE SHALL BE 1/2" O.D. PROVIDE WATER HAMMER SHOCK ARRESTORS AND FIRE RATED BOX WHERE REQUIRED.
IMB-1	ICE MAKER BOX	–	–	–	–	–	SIOUX CHIEF STANDARD: 696-G1010CF FIRE RATED: 696RG1010CF	ABS BOX 5-1/2" HIGH x 4" WIDE. 1/2" SUPPLY CONNECTION. PROVIDE WATER HAMMER SHOCK ARRESTORS AND FIRE RATED BOX WHERE REQUIRED.
SA	SHOCK ARRESTOR	–	–	–	–	–	SIOUX CHIEF 650 SERIES	SIZE PER MANUFACTURER'S RECOMMENDATIONS. PDI CERTIFIED. WHA-1: SIZE "A", WHA-2: SIZE "B". SIZE PER PDI METHOD.
WCO-1	WALL CLEANOUT	SEE DWG.	–	–	–	–	ZURN Z1446	CLEANOUT TEE, DURA-COATED CAST IRON BODY, GAS AND WATERTIGHT ABS TAPERED THREAD PLUG, AND ROUND, SMOOTH STAINLESS STEEL WALL ACCESS COVER WITH SECURING SCREW.
ECO-1	EXTERIOR CLEANOUT	SEE DWG.	–	–	–	–	ZURN ZS1400-VP	"LEVEL-TROL" ADJUSTABLE FLOOR CLEANOUT, DURA-COATED CAST IRON BODY WITH GAS AND WATERTIGHT ABS TAPERED THREAD PLUG AND ROUND SECURED STAINLESS STEEL ADJUSTABLE TO FINISHED FLOOR WITH VANDALPROOF SCREWS.
FCO-1	FLOOR CLEANOUT	SEE DWG.	–	–	–	–	ZURN ZS1400-VP	"LEVEL-TROL" ADJUSTABLE FLOOR CLEANOUT, DURA-COATED CAST IRON BODY WITH GAS AND WATERTIGHT ABS TAPERED THREAD PLUG AND ROUND SECURED STAINLESS STEEL ADJUSTABLE TO FINISHED FLOOR WITH VANDALPROOF SCREWS.
HB-1	HOSE BIBB - BUILDING FREEZE PROOF						ZURN Z1320XL WITH BOX	FREEZE PROOF ANTI-SIPHON WALL FAUCET WITH EXTERNAL VACUUM BREAKER, ALL BRONZE INTERIOR COMPONENTS, VANDAL-RESISTANT OPERATING STEM, ROUGH BRONZE EXTERIOR AND 3/4" MALE HOSE CONNECTION, LOOSE KEY HANDLE AND 3-5/8" DEEP BOX.
FD-1	FLOOR DRAIN	SEE DWG.	–	–	–	–	ZURN ZN415S-HD-P	DURA-COATED CAST IRON BODY WITH BOTTOM OUTLET, COMBINATION INVERTIBLE MEMBRANE CLAMP AND ADJUSTABLE COLLAR WITH SEEPAGE SLOTS AND "TYPE S" POLISHED NICKEL BRONZE, SQUARE HEAVY-DUTY STRAINER AND 1/2" TRAP PRIMER CONNECTION.
RD-1	ROOF DRAIN - PRIMARY & SECONDARY COMBO	SEE DWG.	–	–	–	–	ZURN ZC163	15" DIAMETER PRIMARY & SECONDARY COMBO ROOF DRAIN. DURA-COATED CAST IRON BODY WITH COMBINATION MEMBRANE FLASHING CLAMP/GRAVEL GUARD, DOUBLE TOP SET DECK PLATE AND LOW SILHOUETTE GALVANIZED CAST IRON DOME. SEE PLANS FOR PIPE SIZING.
RD-1	ROOF DRAIN - PRIMARY SINGLE DRAIN	SEE DWG.	–	–	–	–	ZURN ZC100-C-D	15" DIAMETER PRIMARY ROOF DRAIN. DURA-COATED CAST IRON BODY WITH COMBINATION MEMBRANE FLASHING CLAMP/GRAVEL GUARD AND LOW SILHOUETTE GALVANIZED CAST IRON DOME. SEE PLANS FOR PIPE SIZING.
RPBP-1	REDUCED PRESSURE BACKFLOW PREVENTER	–	–	–	SEE DWG.	–	WATTS LF009	LEAD FREE REDUCED PRESSURE ZONE ASSEMBLY WITH 2 ISOLATION VALVES AND 2 BRONZE TEST COCKS. 1/2"-2" IN SIZE.
DSN-1	DOWNSPOUT NOZZLE	–	–	–	SEE DWG.	–	JR SMITH 1770T	CAST BRONZE NOZZLE AND FLANGE.
DSN-2	DOWNSPOUT NOZZLE	–	–	–	SEE DWG.	–	JR SMITH 1775	FABRICATED TYPE 304 STAINLESS STEEL DOWNSPOUT COVER WITH HINGED PERFORATED COVER.
TPV-1	TRAP PRIMER VALVE	–	–	–	1/2"	–	PRECISION PLUMBING PRODUCTS PR-500	PROVIDE FULLY ACCESSIBLE SHUT OFF VALVE TO EACH PRIMER VALVE.
TMV-1	MIXING VALVE	–	–	–	1/2"	1/2"	SYMMONS 7-225-CK	THERMOSTATIC CONTROLLER, CHECK STOPS, REMOVABLE CARTRIDGE WITH STRAINER, S.S. PISTON, THERMAL MOTOR. MIN FLOW RATE .5 GPM.
BWV-1	BACKWATER VALVE	SEE DWG.	–	–	–	–	ZURN Z1090	DURA-COATED CAST IRON BODY WITH NO-HUB INLET AND OUTLET, GASKETED BOLTED COVER, AUTOMATIC PVC FLAPPER TYPE BACKWATER VALVE WITH O-RING.
PRV-1	PRESSURE REGULATING VALVE	–	–	–	SIZE/ SEE DWG.	–	CLA-VAL 90-01	BRONZE BODY AND COVER, ANSI B16.24, GLOBE TPYE, BRONZE DISC GUIDE, SEAT & COVER, BUNA-N RUBBER DISC, NYLON REINFORCED BUNA-N RUBBER DIAPHRAGM, STAINLESS STEEL STEM NUT AND SPRING, STAINLESS STEEL PILOT SYSTEM.
FCV-1	FLOW CONTROL VALVE	–	–	–	–	1/2"	CIRCUIT SOLVER CS-1/2-120"	THERMOSTATIC SELF-ACTUATING BALANCING VALVE.

NOTES:

1. ALL PLUMBING FIXTURES SHALL BE SUPPLIED WITH ANGLE STOP SUPPLY RISERS. THIS SHALL INCLUDE ALL WASHING MACHINES, DISHWASHERS & ICE MAKERS.
2. PROVIDE FULLY ACCESSIBLE SHOCK ARRESTORS ON SUPPLIES TO WASHING MACHINES, DISHWASHERS & ICE MAKERS.

PLUMBING FIXTURE SCHEDULE - APARTMENT

MARK	FIXTURE	WASTE	TRAP	VENT	COLD WATER	HOT WATER	MANUFACTURER /MODEL #	DESCRIPTION
WC-1	WATER CLOSET	3"	INTEG	–	1/2"	–	STERLING VALTON LEFT HAND LEVER: 402312 BOWL: 403378 TANK: 404501 RIGHT HAND LEVER: 402312-RA BOWL: 403378 TANK: 404501-RA KOHLER BREVIA K-20110	FLOOR MOUNTED TANK TYPE, 15-5/16" RIM HEIGHT, 1.28 GALLONS PER FLUSH, WHITE VITREOUS CHINA, ELONGATED BOWL, BRASSCRAFT 1/4 TURN ANGLE STOP SUPPLY TUBE & ESCUTCHEONS. PROVIDE SOLID PLASTIC ELONGATED SEAT WITH COVER.
L-1	LAVATORY	2"	1-1/4"	1-1/2"	1/2"	1/2"	STERLING SANIBEL 442004 MOEN ADLER 84603	20"x17" OVAL DROP-IN, VITREOUS CHINA, 4" CENTERS WITH FRONT OVERFLOW. TWO HANDLE LAVATORY FAUCET, 1.2 GPM, POP UP WASTE, P-TRAP AND WALL ARM. BRASSCRAFT 1/4 TURN ANGLE STOP SUPPLIES W/SUPPLY TUBES AND ESCUTCHEONS.
L-2	LAVATORY	2"	1-3/4"	1-1/2"	1/2"	1/2"	NAMEEK'S CITY CERA STYLE 001600-U KOHLER DEVONSHIRE K-193-4	19.7"x9.8" RECTANGULAR WALL MOUNTED, WHITE CERAMIC, SINGLE HOLE WITH FRONT OVERFLOW. SINGLE HANDLE LAVATORY FAUCET, 1.2 GPM, POP UP WASTE, P-TRAP AND WALL ARM. BRASSCRAFT 1/4 TURN ANGLE STOP SUPPLIES W/SUPPLY TUBES AND ESCUTCHEONS.
S-1	SINK (SINGLE BOWL)	2"	1-1/2"	1-1/2"	1/2"	1/2"	STERLING SOUTHHAVEN 24912-4-NA MOEN ADLER 87233	33"x22"x8" SINGLE BOWL, 20 GAUGE STAINLESS STEEL, TOP MOUNT SINK. SINGLE LEVER HANDLE PULL DOWN SPRAYER, 1.5 GPM, STAINLESS STEEL FINISH. STAINLESS STEEL STRAINER DRAIN AND TAILPIECE, P-TRAP AND WALL ARM. BRASSCRAFT 1/4 TURN ANGLE STOP SUPPLY TUBES & ESCUTCHEONS.
BT-1	BATHTUB	2"	2"	1-1/2"	1/2"	1/2"	STERLING ENSEMBLE RIGHT DRAIN: 71101120 LEFT DRAIN: 71101110 MOEN CALDWELL 82970SRN	60"x36"x16" VIKRELL, SLOPING WITH INTEGRAL APRON AND TILING FLANGE. PRESSURE BALANCING MIXING VALVE. TRIM WITH SPRAY HEAD, ARM AND FLANGE, 1.75 GPM, CHROME. LSP RAPID FIT LIFT AND TURN WASTE AND OVERFLOW KIT.
SH-1	SHOWER	2"	2"	2"	1/2"	1/2"	STERLING ENSEMBLE RIGHT DRAIN: 72181120 LEFT DRAIN: 72181110 MOEN CALDWELL 82495C	60"x32" VIKRELL, 3-1/2" THRESHOLD, TEXTURED FLOOR AND TILING FLANGE. PRESSURE BALANCING MIXING VALVE. TRIM WITH SPRAY HEAD, ARM AND FLANGE, 1.75 GPM, CHROME. PVC FLOOR DRAIN WITH STAINLESS STEEL STRAINER.

NOTES:

1. CONTRACTOR TO VERIFY IF THIS PROJECT HAS I.D. DRAWINGS. IF THERE ARE I.D. DRAWINGS THE PLUMBING FIXTURES SELECTED IN THE I.D. PACKAGE OVERRIDE THIS PLUMBING SCHEDULE.
2. COLOR/FINISH OPTIONS SHALL BE SUBMITTED TO THE ARCHITECT/I.D./OWNER PRIOR TO PURCHASE AND INSTALLATION.
3. REFER TO ARCHITECTURAL DRAWINGS FOR MOUNTING HEIGHTS OF ALL FIXTURES.
4. ALL PLUMBING FIXTURES SHALL BE SUPPLIED WITH ANGLE STOP SUPPLY RISERS. THIS SHALL INCLUDE ALL FAUCETS AND TOILETS.

ELECTRIC WATER HEATER SCHEDULE - APARTMENT

MARK	TYPE	GALLONS	INPUT KW	GPH REC. @ 90°F RISE	VOLTAGE/PHASE	OPERATING WEIGHT (LBS.)	DIMENSIONS	SELECTION BASED ON: MANUFACTURER	SELECTION BASED ON: MODEL #	UNIFORM ENERGY FACTOR	NOTES
EWH-1	ELECTRIC	38	4.5	21	208/240V/1ø	418	32"H x 23"ø - LOW BOY	A.O. SMITH OR EQUAL	ENLB-40	.92	1. & 2.
EWH-2	ELECTRIC	40	4.5	21	208/240V/1ø	418	62"H x 18"ø - TALL	A.O. SMITH OR EQUAL	ENT-40	.92	1. & 2.
EWH-3	ELECTRIC	50	4.5	21	208/240V/1ø	510	61"H x 21"ø - TALL	A.O. SMITH OR EQUAL	ENT-50	.93	1. & 2.

NOTES:
1. PROVIDE T & P VALVE, EXPANSION CONTROL DEVICE, AND 24 GAUGE 1-1/2" DEEP WATER HEATER DRAIN PAN WITH 1" DRAIN CONNECTION. REFER TO DETAIL.
2. COORDINATE WATER HEATER LOCATION AND PIPING WITH MECHANICAL PLANS.

PUMP SCHEDULE - APARTMENT

MARK	LOCATION	GPM	FT HEAD	CONN. SIZE OUTLET	MOTOR DATA HP/WATT	MOTOR DATA VOLTAGE/PHASE	SELECTION BASED ON: MANUFACTURER	SELECTION BASED ON: MODEL	NOTES
SP-1	ELEVATOR SUMP PIT	50	25	1-1/2"	3/4 HP	120/1ø	LIBERTY	ELV-290	1. & 2.
CP-1	UNIT CIRCULATING PUMP	2.2	3.9	1/2"	8.5 WATTS	120/1ø	GRUNDFOS	UP10-16 PM A BU/LC	3. & 4.

NOTES:
1. SUMP PUMP PROVIDED WITH OIL DETECTOR CONTROL REQUIRED FOR HYDRAULIC TYPE ELEVATORS. LOCATE ALARM IN MECHANICAL ROOM AND PROVIDE SIGNAGE "ELEVATOR SUMP PUMP". PROVIDE MODEL WITHOUT OIL DETECTOR IF TRACTION DRIVE ELEVATOR IS BEING INSTALLED.
2. PER ASME 17.1 ONE 50 GPM SUMP PUMP IS REQUIRED PER ELEVATOR CAR.
3. UNIT CIRCULATING PUMP SHALL OPERATE PER FBCE R403.5.2. PUMP SHALL START ON FLOW OF DEMAND HOT WATER AND BASED ON MAINTAINING LOOP TEMPERATURE OF 104°F.
4. PROVIDE WITH AQUASTAT AND FLOW CONTROL.

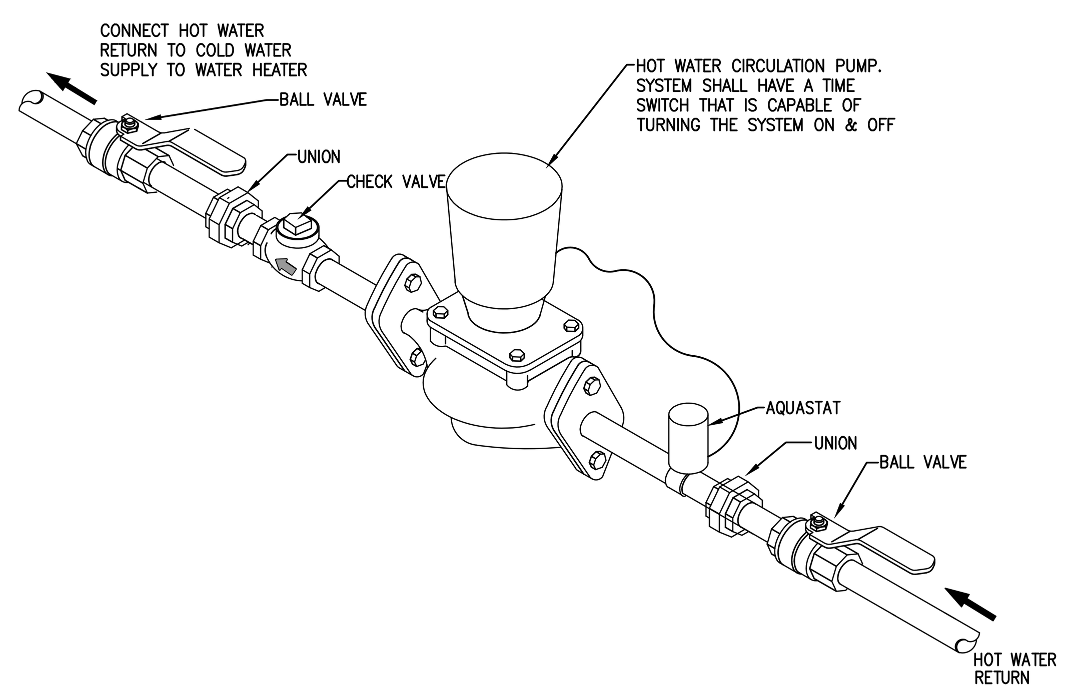

6 NTS HOT WATER RECIRCULATING PUMP DETAIL

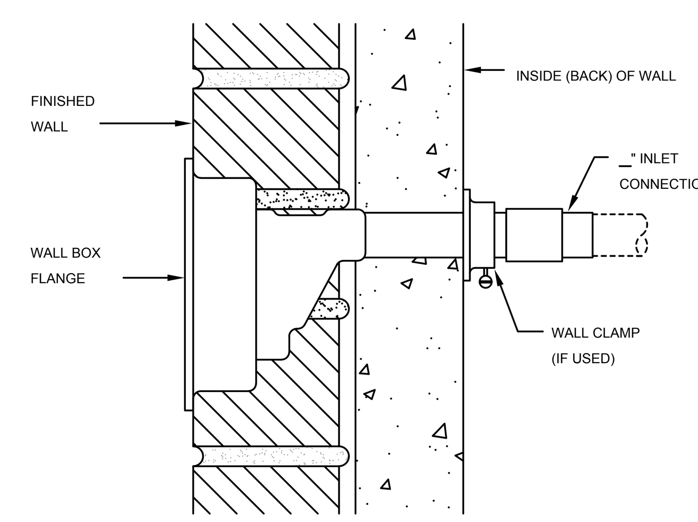

5 NTS FREEZEPROOF WALL HYDRANT

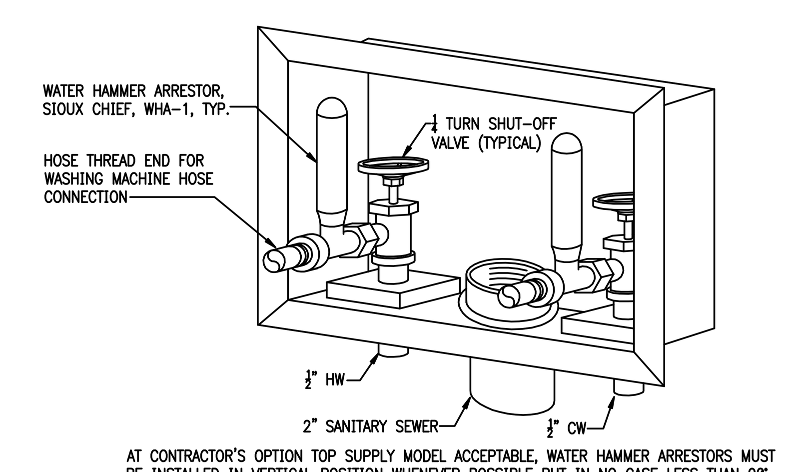

AT CONTRACTOR'S OPTION TOP SUPPLY MODEL ACCEPTABLE, WATER HAMMER ARRESTORS MUST BE INSTALLED IN VERTICAL POSITION WHENEVER POSSIBLE BUT IN NO CASE LESS THAN 90°

4 NTS WASHER BOX

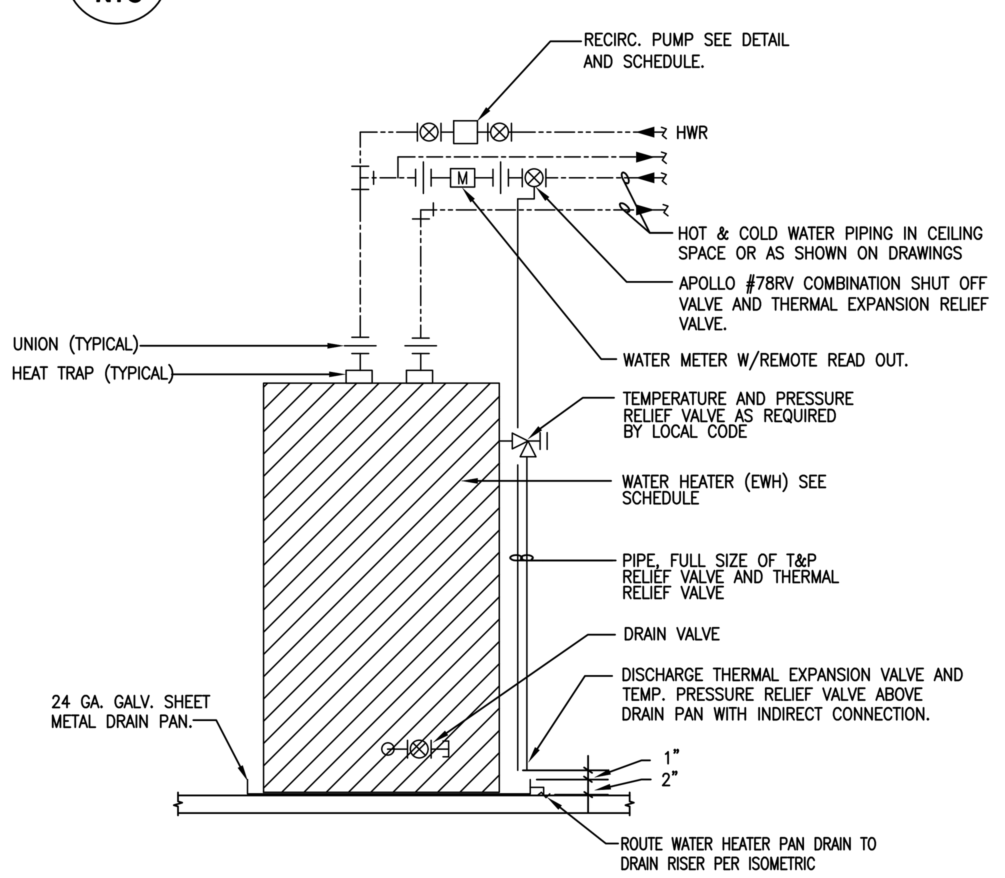

3 NTS WATER HEATER DETAIL IN UNITS (WITH CIRCULATING PUMP)

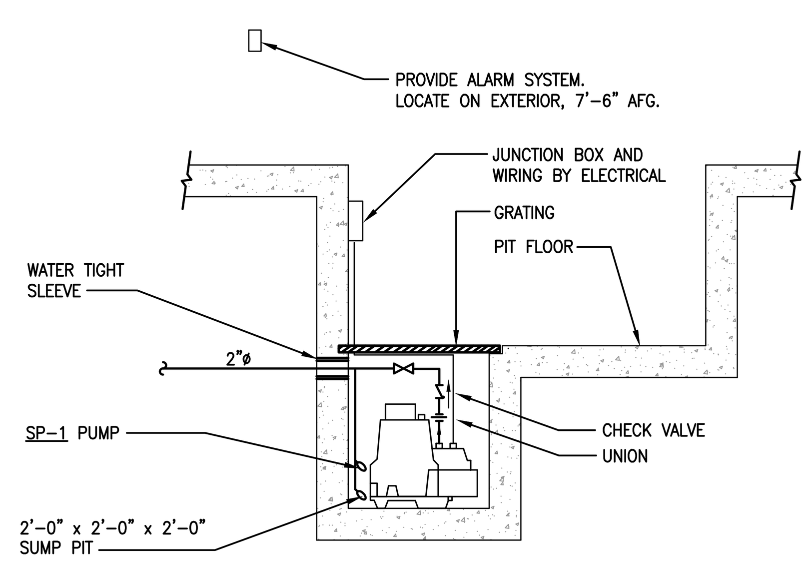

PROVIDE PLACARD BELOW OIL ALARM WITH 2" LETTERS READING "ELEVATOR SUMP PUMP"

2 NTS ELEVATOR SUMP PUMP DETAIL

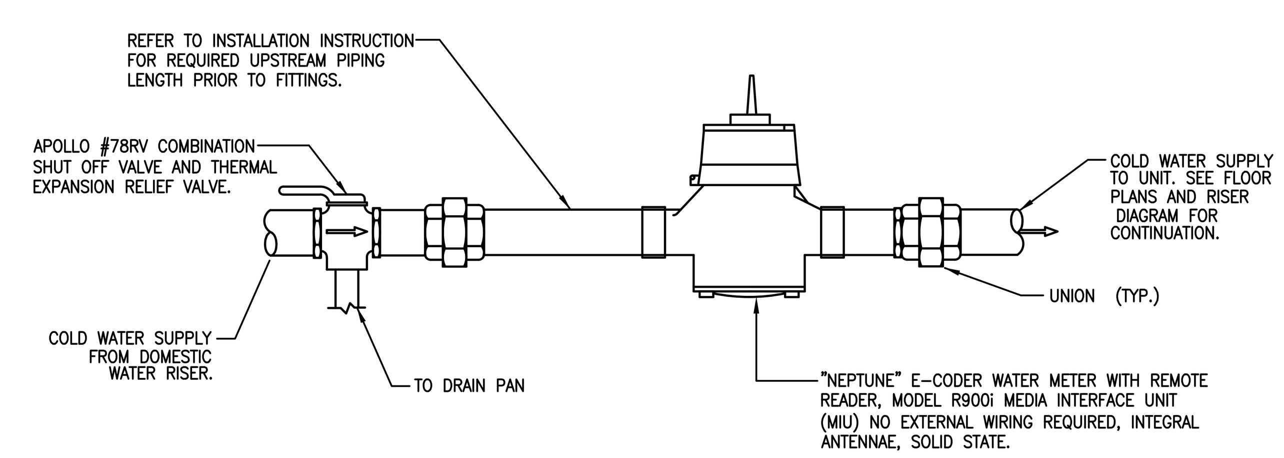

1 NTS WATER METER DETAIL (WITH EXPANSION VALVE)

U.S. DEPARTMENT OF HOUSING AND URBAN DEVELOPMENT

ISSUE HISTORY

No.	Date	Description
1	04/15/22	Permit Submission

REVISION HISTORY

No.	Date	Description

FUGLEBERG KOCH
2555 Temple Trail, Winter Park, FL 32789 (407) 629-0595
www. fuglebergkoch.com AA26002103

CONSULTANT
Joseph, Lawrence & Co Consulting Engineers
1180 HARWOOD AVE. SUITE 3000
ALTAMONTE SPRINGS, FLORIDA 32714
TEL: 321.972.4466
WWW.JLCENG.COM
CA NO. 4050 - E

JLC 22.0023.00

ALABAMA LICENSED No. 33858 PROFESSIONAL ENGINEER ADAM J. BARNEY

THE MADISON
HUNTSVILLE, AL

Drawn:	MJR/SMB
Checked:	BLS/AJB
Approval:	BLS/AJB
Date:	04/15/2022
Project #:	5722

APARTMENT SCHEDULE & DETAIL PLUMBING

P5.01

© 2018 These documents and their contents are the property of FUGLEBERG KOCH - AA26002103, and are issued only for the specific project noted on these drawings. Any reproductions, revisions, or modifications of these documents without the expressed written consent of Fugleberg Koch is prohibited by law.

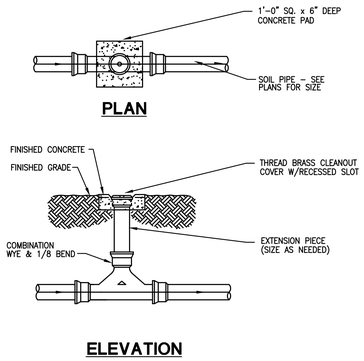

6 NTS TWO-WAY CLEANOUT

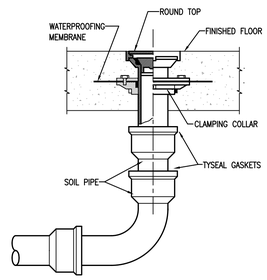

5 NTS FLOOR CLEANOUT

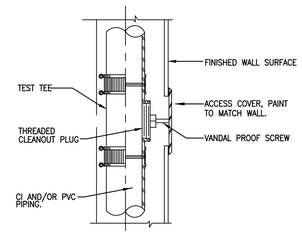

4 NTS WALL CLEANOUT

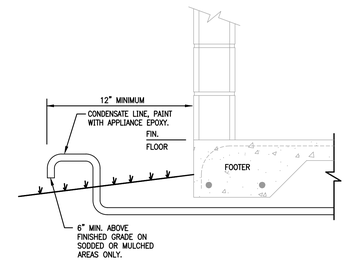

3 NTS CONDENSATE DRAIN TERMINATION DETAIL

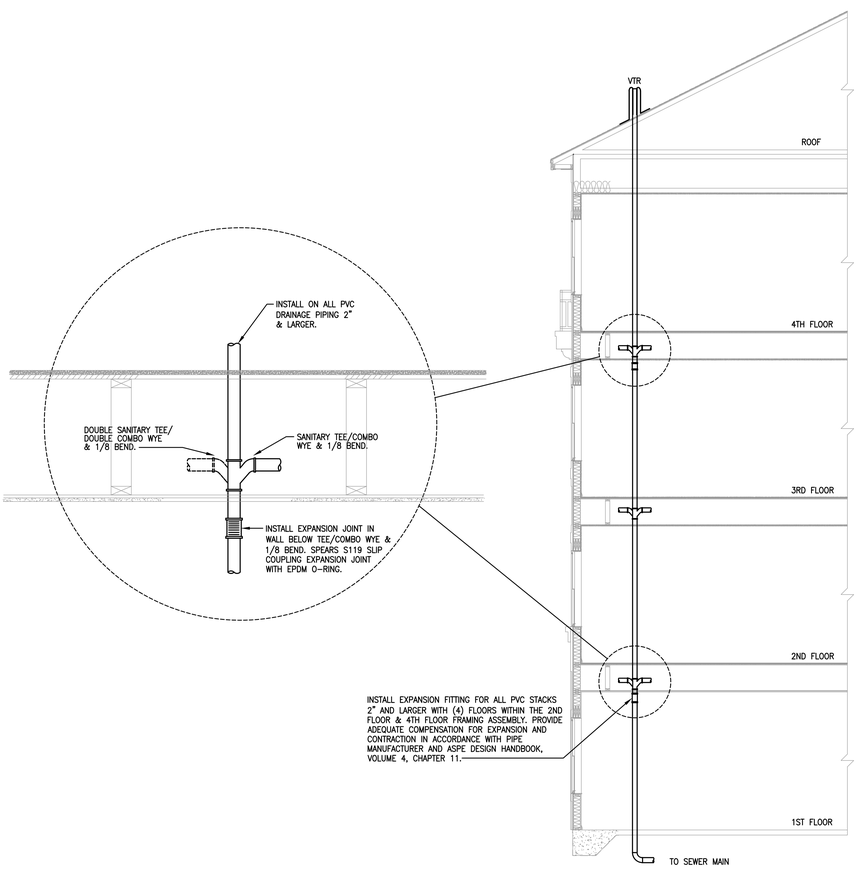

2 NTS DRAIN PIPING EXPANSION DETAIL

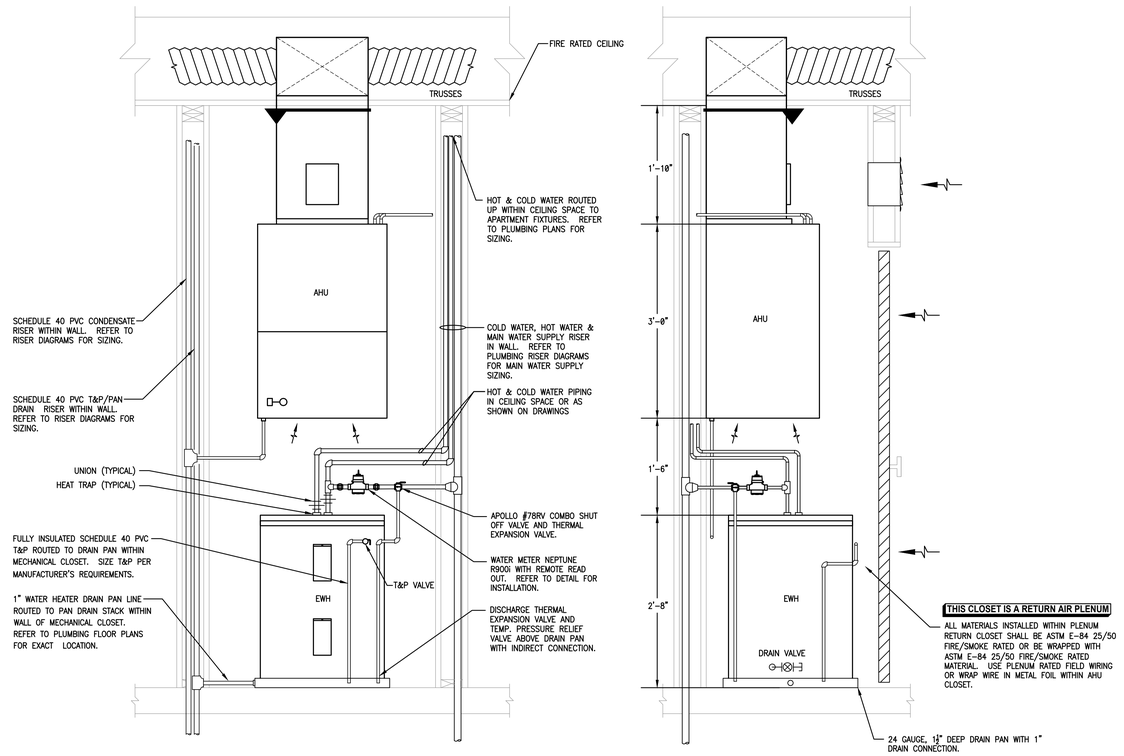

FRONT VIEW

SIDE VIEW

1 NTS LOWBOY WATER HEATER BELOW AHU DETAIL
UNITS

U.S. DEPARTMENT OF HOUSING AND URBAN DEVELOPMENT

ISSUE HISTORY

No.	Date	Description
1	04/15/22	Permit Submission

REVISION HISTORY

No.	Date	Description

FUGLEBERG KOCH
2555 Temple Trail, Winter Park, FL 32789 (407) 629-9595
www.fuglebergkoch.com AA26002103

CONSULTANT
Joseph, Lawrence & Co
Consulting Engineers
1180 HARWOOD AVE SUITE 3000
ALTAMONTE SPRINGS, FLORIDA 32714
TEL. 321.972.4466
WWW.JLCENG.COM
CA NO. 4050 - E

JLC 22.0023.00

STATE OF ALABAMA BRIAN L. SCHRAGER No. 23885 PROFESSIONAL ENGINEER

Drawn:	MJR/SMB
Checked:	BLS/AJB
Approved:	BLS/AJB
Date:	04/15/2022
Project #:	5722

THE MADISON
HUNTSVILLE, AL

APARTMENT DETAILS
PLUMBING

P5.02

© 2021 Any reproductions, revisions, or modifications of these documents without the expressed written consent of Fugleberg Koch is prohibited by law.

System No. W-L-2078

Classified by Underwriters Laboratories, Inc. to UL 1479

WL 2078

F Ratings — 1 and 2 Hr (See Item 1)
T Ratings — 0, 1 and 2 Hr (See Items 2 and 3)
L Rating At Ambient — 3 CFM/sq ft
L Rating At 400 F — Less Than 1 CFM/sq ft

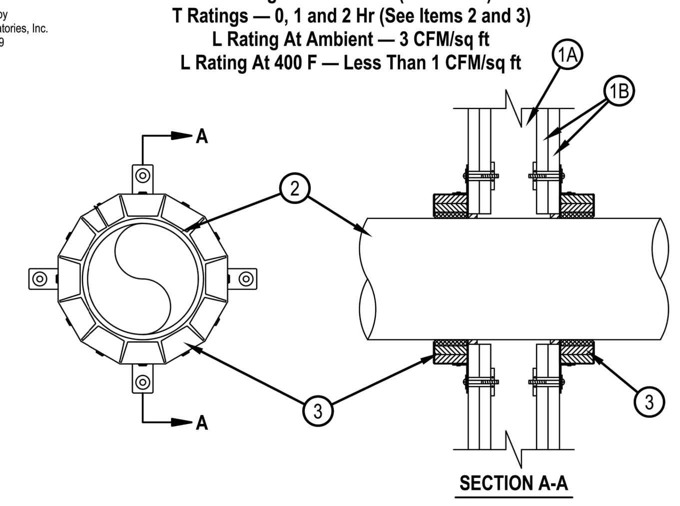

1. Wall Assembly — The fire-rated gypsum board/stud wall assembly shall be constructed of the materials and in the manner specified in the individual U300, U400, V400 or W400 Series Wall and Partition Designs in the UL fire Resistance Directory and shall include the construction features noted below:
   A. Studs — Wall framing may consist of either wood studs or steel channel studs. Wood studs to consist of nom 2 by 4 in. (51 by 102 mm) lumber spaced max 16 in. (406 mm) OC. Steel studs to be min 2-1/2 in. (64 mm) wide and spaced max 24 in. (610 mm) OC.
   B. Gypsum Board* — Nom 5/8 in. (16 mm) thick gypsum board, as specified in the individual Wall and Partition Design. Max diam of opening is 11-1/2 in. (292 mm).
   The hourly F Rating of the firestop system is equal to the hourly fire rating of the wall assembly in which it is installed.
2. Through-Penetrants — One nonmetallic pipe, conduit or tubing to be installed within the firestop system. The annular space between pipe and periphery of opening shall be min 0 in. (point contact) to max 1/2 in. (13 mm). Pipe or conduit to be rigidly supported on both sides of the wall assembly. The following types and sizes of nonmetallic pipes may be used:
   A. Polyvinyl Chloride (PVC) Pipe — Nom 10 in. (254 mm) diam (or smaller) Schedule 40 solid-core or cellular core PVC pipe for use in closed (process or supply) or vented (drain, waste or vent) piping system.
   B. Chlorinated Polyvinyl Chloride (CPVC) Pipe — Nom 10 in. (254 mm) diam (or smaller) SDR13.5 CPVC pipe for use in closed (process or supply) piping systems.
   C. Acrylonitrile Butadiene Styrene (ABS) Pipe — Nom 6 in. (152 mm) diam (or smaller) Schedule 40 solid-core or cellular core ABS pipe for use in closed (process or supply) or vented (drain, waste or vent) piping systems
   D. Flame Retardant Polypropylene (FRPP) Pipe — Nom 6 in. (152 mm) diam (or smaller) Schedule 40 FRPP pipe for use in closed (process or supply) or vented (drain, waste or vent) piping system.
   E. Polyvinylidene Fluoride (PVDF) Pipe — Nom 4 in. (102 mm) diam (or smaller) PVDF pipe for use in closed (process or supply) or vented (drain, waste or vent) piping system.
   F. Crosslinked Polyethylene (PEX) Tubing — Nom 4 in. (102 mm) diam (or smaller) SDR 9 Uponor AquaPEX or Wirsbo hePEX PEX tube for use in closed (process or supply) piping systems.
   When max 6 in. diam pipe is used, T Rating is equal to the hourly fire rating of the wall except that when penetrant type 2F is used, T Rating is 0 hr. When nom 8 in. or 10 in. (203 or 254 mm) diam pipe is used, T Rating is 0 hr.

HILTI
Hilti Firestop Systems

Reproduced by HILTI, Inc. Courtesy of Underwriters Laboratories, Inc. July 31, 2018

System No. F-C-2160

Classified by Underwriters Laboratories, Inc. to UL 1479

FC 2160

F Rating — 1 and 2 Hr
T Rating — 1 and 2 Hr

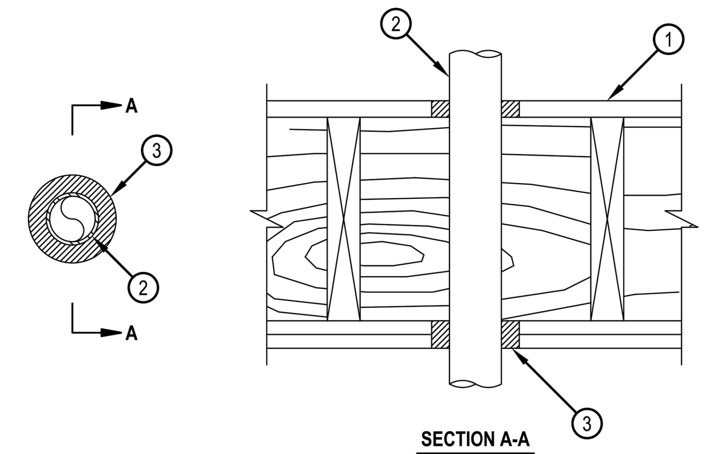

1. Floor-Ceiling Assembly — The 1 and 2 hr fire-rated solid or trussed lumber joist floor-ceiling assembly shall be constructed of the materials and in the manner specified in the individual L500 Series Floor-Ceiling Designs in the UL Fire Resistance Directory. The general construction features of the floor-ceiling assembly are summarized below:
   A. Flooring System — Lumber or plywood subfloor with finish floor of lumber, plywood or Floor Topping Mixture* as specified in the individual Floor-Ceiling Design. Diam of opening shall be 2 in. (51 mm) larger than the nom diam of through penetrant (Item 2).
   B. Wood Joists* — Nom 10 in. (254 mm) deep (or deeper) lumber, steel or combination lumber and steel joists, trusses or Structural Wood Members* with bridging as required and with ends firestopped.
   C. Furring Channels (Not Shown) — Resilient galv steel furring installed perpendicular to wood joists between first and second layers of wallboard (Item 1D). Furring channels spaced max 24 in. (610 mm).
   D. Gypsum Board* — Nom 4 ft (1.2 m) wide by 5/8 in. (16 mm) thick as specified in the individual Floor-Ceiling Design. First layer of wallboard nailed to wood joists. Second layer of wallboard screw-attached to furring channels. Diam of opening shall be 2 in. (51 mm) larger than the nom diam of through penetrant (Item 2).

1.1 Chase Wall — (Optional, not Shown) — The through penetrants (Item No. 2) may be routed through a fire-rated or non-rated single, double or staggered wood stud/gypsum wall board chase wall. The chase wall shall be constructed to include the following construction features:
   A. Studs — Nom 2 by 6 in. (51 by 152 mm) or double nom 2 by 4 in. (51 by 102 mm) lumber studs.
   B. Sole Plate — Nom 2 by 6 in. (51 by 152 mm) or parallel nom 2 by 4 in. (51 by 102 mm) lumber plates, tightly butted. Diam of opening shall be 2 in. (51 mm) larger than the nom diam of through penetrant (Item 2).
   C. Top Plate — The double top plate shall consist of two nom 2 by 6 in. (51 by 152 mm) or two sets of parallel 2 by 4 in. (51 by 102 mm) lumber plates, tightly butted. Diam of opening shall be 2 in. (51 mm) larger than the nom diam of through penetrant (Item 2).
   D. Gypsum Board* — One or two layers of min 1/2 in. (14 mm) gypsum board.

HILTI
Hilti Firestop Systems

Reproduced by HILTI, Inc. Courtesy of Underwriters Laboratories, Inc. April 06, 2018

System No. F-C-2029

Classified by Underwriters Laboratories, Inc. to UL 1479

FC 2029

F Rating - 2 Hr
T Rating - 2 Hr

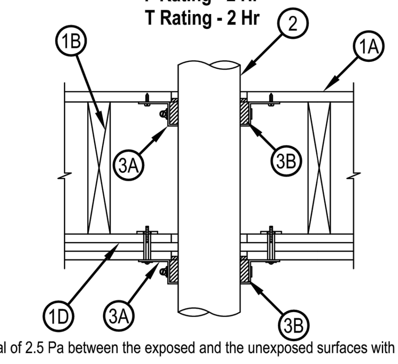

System tested with a pressure differential of 2.5 Pa between the exposed and the unexposed surfaces with the higher pressure on the exposed side.

1. Floor-Ceiling Assembly — The fire-rated wood joist floor-ceiling assembly shall be constructed of the materials and in the manner specified in the individual L 500 Series Floor-Ceiling Design in the UL Fire Resistance Directory, as summarized below:
   A. Flooring System — Lumber or plywood subfloor with finish floor of lumber, plywood or Floor Topping Mixture* as specified in the individual Floor-Ceiling Design.
   B. Wood Joists — Nom 10 in. (254 mm) deep (or deeper) lumber, steel or combination lumber and steel joists, trusses or Structural Wood Members* with bridging as required and with ends firestopped.
   C. Furring Channels — (Not Shown) — (As required) Resilient galvanized steel furring installed in accordance with the manner specified in the individual L500 Series Designs in the Fire Resistance Directory.
   D. Gypsum Board* — Thickness, type, number of layers and fasteners shall be as specified in the individual Floor-Ceiling Design.
2. Through-Penetrants — One nonmetallic pipe, conduit or tubing to be installed within the firestop system. Diam of openings hole-sawed through flooring system and through two layers gypsum wallboard ceiling to be 0 to 1/2 in. (13 mm) larger than the outside diam of through-penetrant. Pipe or conduit to be rigidly supported on both sides of the floor-ceiling assembly. The following types and sizes of nonmetallic pipes may be used:
   A. Polyvinyl Chloride (PVC) Pipe — Nom 4 in. (102 mm) diam (or smaller) Schedule 40 solid-core PVC pipe for use in closed (process or supply) or vented (drain, waste or vent) piping systems.
   B. Chlorinated Polyvinyl Chloride (CPVC) Pipe — Nom 4 in. (102 mm) diam (or smaller) SDR13.5 CPVC pipe for use in closed (process or supply) or vented (drain, waste or vent) piping systems.
3. Firestop System — The details of the firestop system shall be as follows:
   A. Steel Collar — Collar fabricated from coils of precut min 0.017 in. (0.43 mm) thick (No. 28 MSG) galv steel available from the sealant manufacturer. Collar shall be nom 1-3/4 in. (44 mm) deep with 1 in. (25 mm) wide by 2 in. (51 mm) long anchors tabs on 2 in. (51 mm) centers for securement to floor and ceiling surfaces. The anchor tabs shall be bent 90 degree outward for securement to the floor and ceiling surfaces. The opposite side incorporates retainer tabs, 1/2 in. (13 mm) wide by 3/16 in. (5 mm) long, prebent toward the pipe surface. Collar shall be wrapped around pipe maintaining a 1 in. (25 mm) distance between pipe and collar, and overlapping min 1 in. (25 mm) at seam. Collar secure to subfloor with wood screws and washers at every other tab. Collar secured to gypsum board ceiling using 3/16 in. (5 mm) diam steel toggle bolts in conjunction with 1-1/4 in. (32 mm) diam steel fender washers at every other tab. After sealant is installed (Item 3B), the collars shall be compressed around the pipe using a 1/2 in. (13 mm) wide by 0.028 in. (0.7 mm) thick stainless steel band clamp fastened at the collar mid-height.
   B. Fill, Void or Cavity Material* — Sealant — Fill material to be installed to completely fill the collar and provide a min 1/4 in. (6 mm) thickness in the annular spaces at the floor and ceiling.
   HILTI CONSTRUCTION CHEMICALS, DIV OF HILTI INC — FS-ONE Sealant or FS-ONE MAX Intumescent Sealant.

* Indicates such products shall bear the UL or cUL Certification Mark for jurisdictions employing the UL or cUL Certification (such as Canada), respectively.

HILTI
Hilti Firestop Systems

Reproduced by HILTI, Inc. Courtesy of Underwriters Laboratories, Inc. January 20, 2015

System No. W-L-2078

WL 2078

3. Firestop Device* — Firestop Collar — Firestop collar shall be installed in accordance with the accompanying installation instructions. Collar to be installed and latched around the pipe and secured to both sides of the wall using the anchor hooks provided with the collar. (Minimum two anchor hooks for 1-1/2 and 2 in. (38 and 51 mm) diam pipes, three anchor hooks for 3 and 4 in. (76 and 102 mm) diam pipes, four anchor hooks for 6 in. (152 mm) diam pipes, ten anchor hooks for 8 in. (203 mm) diam pipes and twelve anchor hooks for 10 in. (254 mm) diam pipes. The anchor hooks are to be secured to the surface of wall with 3/16 in. (4.8 mm) diam by 2-1/2 in. (64 mm) long steel toggle bolts along with washers. As an alternate for pipe sizes of nom 4 in. diam or less, min No. 10 by 1-1/2 in. (254 by 38 mm) long drywall or laminate screws with min 3/4 in. (19 mm) steel washers may be used. When the drywall or laminate screw is used, T Rating shall not exceed 1 hr.
HILTI CONSTRUCTION CHEMICALS, DIV OF HILTI INC — CP 643 50/1.5"N, CP 643 63/2"N, CP 643 90/3"N, CP 643 110/4"N, CP 643 160/6"N, CP 644-200/8" US and CP 644-250/10" US Firestop Collars
4. Fill, Void or Cavity Material* — Sealant - (Not Shown) — Min 1/2 in. (13 mm) thickness of sealant applied within the annular space for nom 8 in. and 10 in. (203 and 254 mm) diam pipes, flush with each side of wall. Sealant in annular space is optional for max 6 in. (152 mm) diam pipes except that for penetrant type 2F, sealant is required. A min 1/4 in. (6 mm) thickness of sealant is required within the annular space, flush with each side of wall, to attain the L Ratings for max 6 in. (152 mm) diam pipes.
HILTI CONSTRUCTION CHEMICALS, DIV OF HILTI INC — FS-ONE MAX Intumescent Sealant

* Indicates such products shall bear the UL or cUL Certification Mark for jurisdictions employing the UL or cUL Certification (such as Canada), respectively.

HILTI
Hilti Firestop Systems

Reproduced by HILTI, Inc. Courtesy of Underwriters Laboratories, Inc. July 31, 2018

System No. F-C-2160

FC 2160

2. Through Penetrants — One nonmetallic pipe or conduit to be installed concentrically or eccentrically within the firestop system. Annular space between pipe or conduit and edge of opening to be min 1/2 in. (13 mm) and max 1-1/8 in. (29 mm). Pipe or conduit to be rigidly supported on both sides of floor-ceiling assembly. The following types and sizes of nonmetallic pipes or conduits may be used:
   A. Polyvinyl Chloride (PVC) Pipe — Nom 2 in. (51 mm) diam (or smaller) Schedule 40 solid or cellular core PVC pipe for use in closed (process or supply) or vented (drain, waste or vent) piping systems.
   B. Chlorinated Polyvinyl Chloride (CPVC) Pipe — Nom 2 in. (51 mm) diam (or smaller) SDR13.5 CPVC pipe for use in closed (process or supply) piping systems.
3. Fill, Void or Cavity Materials*-Sealant — Fill Material forced into annular space to fill space to max extent possible. Sealant shall be installed flush with top surface of floor or sole plate and bottom surface of ceiling or lower top plate.
HILTI CONSTRUCTION CHEMICALS, DIV OF HILTI INC — FS-ONE Sealant or FS-ONE MAX Intumescent Sealant

* Indicates such products shall bear the UL or cUL Certification Mark for jurisdictions employing the UL or cUL Certification (such as Canada), respectively.

HILTI
Hilti Firestop Systems

Reproduced by HILTI, Inc. Courtesy of Underwriters Laboratories, Inc. April 06, 2018

System No. F-C-2263

Classified by Underwriters Laboratories, Inc. to UL 1479

FC 2263

F Rating — 1 Hr
T Rating — 1 Hr

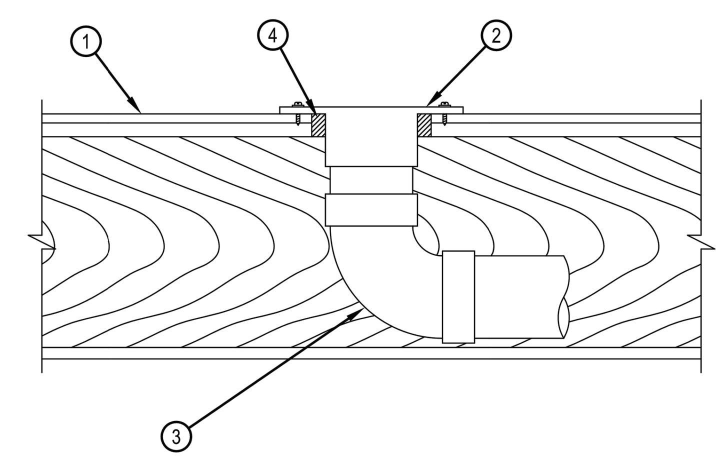

1. Floor-Ceiling Assembly — The 1 hr fire-rated solid or trussed lumber joist floor-ceiling assembly shall be constructed of the materials and in the manner specified in the individual L500 Series Floor-Ceiling Designs in the UL Fire Resistance Directory. The general construction features of the floor-ceiling assembly are summarized below:
   A. Flooring System — Lumber or plywood subfloor with finish floor of lumber, plywood or Floor Topping Mixture* as specified in the individual Floor-Ceiling Design. Max diam of opening shall be 5 in. (127 mm).
   B. Wood Joists* — Nom 10 in. (254 mm) deep (or deeper) lumber, steel or combination lumber and steel joists, trusses or Structural Wood Members* with bridging as required and with ends firestopped.
   C. Gypsum Board* — Nom 5/8 in. (16 mm) thick, 4 ft (1.2 m) wide as specified in the individual Floor-Ceiling Design.
2. Closet Flange — Acrylonitrile butadiene styrene (ABS) or polyvinyl chloride (PVC) closet stub sized to accommodate drain pipe. Closet flange installed over drain piping within floor opening with flange secured to plywood floor with steel screws. Annular space between closet flange and periphery of opening shall be 1/4 in. (6 mm).
3. Drain Piping — Nom 4 in. (102 mm) diam (or smaller) Schedule 40 acrylonitrile butadiene styrene (ABS) or polyvinyl chloride (PVC) drain pipe and 90 degree elbow for use in vented (drain, waste or vent) piping systems. Pipe installed concentrically within firestop system.
4. Fill, Void or Cavity Materials* — Sealant — Min 3/4 in. (19 mm) thickness of fill material applied within the annulus, flush with the bottom surface of floor.
   HILTI CONSTRUCTION CHEMICALS, DIV OF HILTI INC — CP 606 Flexible Firestop Sealant, FS-ONE Sealant or FS-ONE MAX Intumescent Sealant
5. Water Closet — (Not Shown) — Floor mounted vitreous china water closet.

* Indicates such products shall bear the UL or cUL Certification Mark for jurisdictions employing the UL or cUL Certification (such as Canada), respectively.

HILTI
Hilti Firestop Systems

Reproduced by HILTI, Inc. Courtesy of Underwriters Laboratories, Inc. January 18, 2017

U.S. DEPARTMENT OF HOUSING AND URBAN DEVELOPMENT

ISSUE HISTORY

No.	Date	Description
1	04/15/22	Permit Submission

REVISION HISTORY

No.	Date	Description

FUGLEBERG KOCH
2555 Temple Trail, Winter Park, FL 32789 (407) 629-0595
www. fuglebergkoch.com AA26002103

CONSULTANT
Joseph, Lawrence & Co
Consulting Engineers
1180 HARWOOD AVE. SUITE 3000
ALTAMONTE SPRINGS, FLORIDA 32714
TEL: 321.972.4466
WWW.JLCENG.COM
CA NO. 4050 - E

JLC 22.0023.00

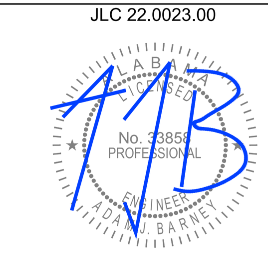

THE MADISON	Drawn:	MJR/SMB
	Checked:	BLS/AJB
	Approval:	BLS/AJB
	Date:	04/15/2022
HUNTSVILLE, AL	Project #:	5722

APARTMENT DETAILS
PLUMBING

P5.03

© 2018 These documents and their contents are the property of FUGLEBERG KOCH - AA26002103, and are issued only for the specific project noted on these drawings. Any reproductions, revisions, or modifications of these documents without the expressed written consent of Fugleberg Koch is prohibited by law.