VICINITY MAP

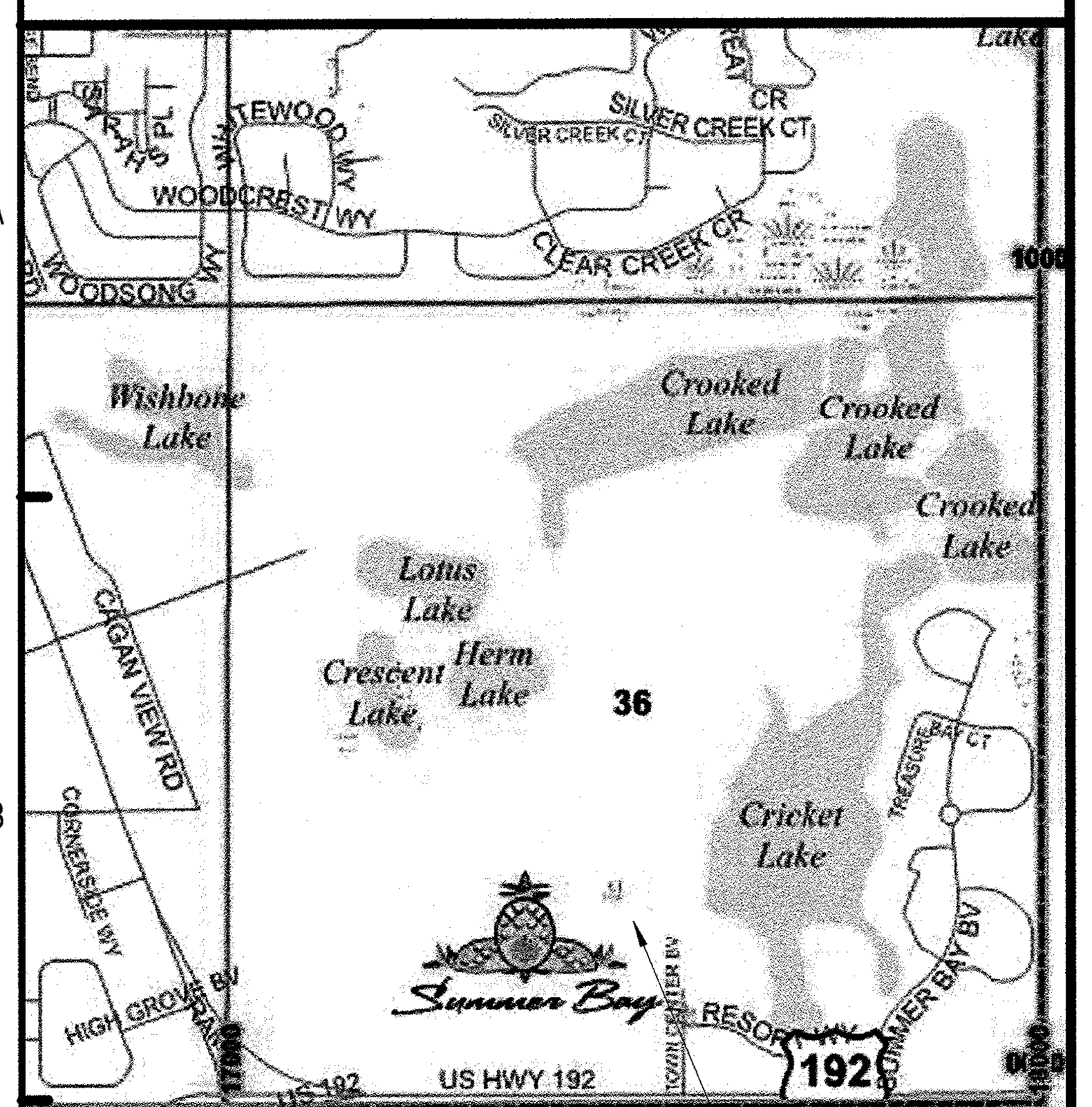

PROJECT SITE



BUILDING TYPE #2

PROJECT NARRATIVE:

The design and documentation of a new market rental apartment development to be located on a parcel that is part of the Summer Bay DRI on Highway 192 in Lake County, Florida. The Owner's residential building program includes approximately 270 dwelling units of 5 basic types distributed among 6 residential buildings of 2 types with associated amenitities.

The dwelling units are distributed among 6 residential buildings of 2 separate building types. The residential buildings are designed to provide 4 floors of dwelling units. The buildings are classified as Type V(A) construction, and all are sprinklered to the requirements of NFPA 13R systems. The residential and amenity buildings are designed as wood frame structures that include engineered truss components for both framed floors and roofs. The buildings are placed on concrete slab on grade foundations with integral thickened edges and grade beams.

The Project program also includes a Clubhouse and pool with amenity buildings which include a Pool Pavilion, Maintenance/Car Wash building & Trash enclosures, which are submitted under a seperate Cover.

The Project scope includes site engineering and landscape improvements that are submitted under separate cover.

SYMBOL KEY:

Symbol	Name	Description
?	DOOR SYMBOL	NUMBERED BY TYPE REFER TO SCHEDULE
?	WINDOW SYMBOL	NUMBERED BY TYPE REFER TO SCHEDULE
?	WALL TAG	? — WALL TYPE OR UL
?	GRID LINE TARGET	A,B,C, ETC. IN ONE DIRECTION 1,2,3, ETC. IN THE OTHER
? ?	ROOM TAG	? ? — ROOM NUMBER
XX	TITLE	? ? ? — DRAWING NUMBER, SCALE
? ?	ELEVATION REFERENCES	DIRECTION OF VIEW, SHEET NUMBER
? ?	SECTION REFERENCES	DIRECTION OF VIEW, SHEET NUMBER
? ?	DETAIL REFERENCES	DETAIL AREA, SHEET NUMBER
X X X X	INTERIOR ELEVATIONS	VIEW NUMBER, DIRECTION OF VIEW, SHEET NUMBER
	LEVEL REFERENCE	Name Elevation
6/12"	ROOF SLOPE ARROW	6/12" — SLOPE, SLOPE DIRECTION
12 6	ROOF SLOPE	12 6 — SLOPE
XX	ACCESSORY TAG	LOCATION OF NOTE APPLICATION, NOTE NUMBER
XX	NOTE TAG	LOCATION OF NOTE APPLICATION, NOTE NUMBER
XX	LEVEL CHANGE	XX — CHANGE IN LEVEL
1	REVISION MARK	REV. LOCATION, REV. No.

DEFERRED SUBMITTALS:

1. Deferral of any submittal items shall have the prior approval of the Building Official having jurisdiction.
2. Submittal documents for deferred submittal items shall be submitted to the Entity designated below for the project who shall review them. These will then be forwarded by the Contractor to the Building Official having jurisdiction with a notation indicating that the deferred submittal documents have been reviewed and that they have been found to be in general compliance with the design of the project.
3. The deferred submittal items shall not be installed until their design and submittal documents have been approved.

LIST (INCLUDING BUT NOT LIMITED TO):

A. BUILDING RAILINGS & GUARDRAILS - REVIEW BY ARCHITECT
B. FIRE ALARM SYSTEM - REVIEW BY ARCHITECT
C. AUTOMATIC FIRE SUPPRESSION (SPRINKLER) SYSTEM - REVIEW BY ARCHITECT
D. PRE-ENGINEERED (WOOD) FLOOR & ROOF TRUSS SYSTEMS - REVIEW BY ARCHITECT
E. BUILDING IDENTIFICATION AND WAYFINDING SIGNAGE - REVIEW BY OWNER
F. POOL DESIGN, ENGINEERING & EQUIPMENT - REVIEW BY OWNER
G. SITE FENCING - REVIEW BY LANDSCAPE ARCHITECT

PERMIT REVIEW STAMP

SUMMER BAY II APARTMENTS

LAKE COUNTY, FLORIDA

OWNER/DEVELOPER
BRYANSTONE PARTNERSHIP
BRYANSTONE
ATTN: JOE H. SCOTT, SR.
1065 EXECUTIVE PARKWAY, SUITE 300
ST. LOUIS, MISSOURI 63141
PHONE (314) 542-0105

ARCHITECT
FUGLEBERG KOCH, LLC
FUGLEBERG KOCH
ATTN: MICHAEL E. GOVE
2555 TEMPLE TRAIL
WINTER PARK, FLORIDA 32789
PHONE (407) 629-0595 FAX (407) 628-1057

CIVIL ENGINEER
BRAVO ENGINEERING, LLC
BRAVO ENGINEERING
ATTN: CHRISTOPHER T. BRAVO
5127 SOUTH ORLANDO AVENUE
ORLANDO, FLORIDA 32809 SUITE 200
PHONE (407) 252-1671

STRUCTURAL
GUTHERMAN STRUCTURAL INC.
Gutherman STRUCTURAL
ATTN: JACK GUTHERMAN
130 CROWN OAK CENTRE DRIVE
LONGWOOD, FLORIDA 32750
PHONE (407) 701-0875

MECHANICAL / ELECTRICAL / PLUMBING
JLC & CO., CONSULTING ENGINEERS
JL &Co Consulting Engineers
ATTN: ADAM J. BARNEY
1180 HARWOOD AVENUE, SUITE 300
ALTAMONTE SPRINGS, FLORIDA 32714
PHONE (321) 972-4466

LANDSCAPE ARCHITECT
Landscape Dynamics
LANDSCAPE Dynamics CONSTRUCTION CO., INC.
LANDSCAPE ARCHITECTS AND PLANNERS
ATTN: RANDY BUCHANAN
629 WARRENTON ROAD
WINTER PARK, FL 32792
PHONE: (407) 579-1811

INTERIOR DESIGN
INTERIOR DESIGN
ChristinaStiles
CHRISTINA STILES INTERIORS
1104 CHARMING STREET
MAITLAND, FL 32751
PHONE (407) 865-5682

CONTRACTOR
ESSIAN CONSTRUCTION
ESSIAN CONSTRUCTION LLC
ATTN: CHUCK SIUDAK
999 DOUGLAS AV
ALTAMONTE SPRINGS, FL 32714
PHONE: (407) 245-8920

INDEX OF DRAWINGS - BUILDING TYPE 2

SHT #	SHEET NAME	REV. No.	REV. DATE	ISSUE DATE
01 - GENERAL				
A0.01b	COVER SHEET BUILDING TYPE 2			02/08/2019
A0.02	CODE ANALYSIS			02/08/2019
A0.03	ACCESSIBLE DATA AND DETAILS			02/08/2019
A0.12	LIFE SAFETY PLANS - BUILDING TYPE 2			02/08/2019
A0.13	LIFE SAFETY PLANS - BUILDING TYPE 2			02/08/2019
A0.17	LIFE SAFETY PLANS SECTIONS - BLDG. TYPE 2			02/08/2019
A0.20	PARTITION TYPES			02/08/2019
A0.22	AREA PLANS - BUILDING TYPE 2			02/08/2019
A0.30	UL REFERENCE DIRECTORY - WALL SYSTEMS			02/08/2019
A0.31	UL REFERENCE DIRECTORY - WALL SYSTEMS			02/08/2019
A0.32	UL REFERENCE DIRECTORY - WALL SYSTEMS			02/08/2019
A0.33	UL REFERENCE DIRECTORY - FLOOR SYSTEM			02/08/2019
A0.34	UL REFERENCE DIRECTORY - ROOF SYSTEMS			02/08/2019
A0.35	UL REFERENCE DIRECTORY - FLOOR PENETRATIONS			02/08/2019
A0.36	UL REFERENCE DIRECTORY - FLOOR PENETRATIONS			02/08/2019
A0.37	UL REFERENCE DIRECTORY - WALL PENETRATIONS			02/08/2019
16				
04 - ARCHITECTURAL				
A1.01	ARCHITECTURAL SITE PLAN			02/08/2019
A2.08	BUILDING TYPE 2 - GROUND FLOOR PLAN			02/08/2019
A2.09	BUILDING TYPE 2 - LEVEL 2 PLAN			02/08/2019
A2.10	BUILDING TYPE 2 - LEVEL 3 PLAN			02/08/2019
A2.11	BUILDING TYPE 2 - LEVEL 4 PLAN			02/08/2019
A2.12	BUILDING TYPE 2 - FLAT ROOF PLAN			02/08/2019
A2.13	BUILDING TYPE 2 - TOP ROOF PLAN			02/08/2019
A2.22	CORRIDOR RCP - BUILDING TYPE 2 - LEVELS 1 & 2			02/08/2019
A2.23	CORRIDOR RCP - BUILDING TYPE 2 - LEVELS 3 & 4			02/08/2019
A2.31	ENLARGED GARAGE PLANS - BUILDING TYPE 2			02/08/2019
A2.33	ENLARGED ENTRY PLANS - BUILDING TYPE 2			02/08/2019
A2.43	BUILDING TYPE 2 - STAIR PLANS			02/08/2019
A2.44	BUILDING TYPE 2 - STAIR SECTIONS			02/08/2019
A2.45	STAIR DETAILS			02/08/2019
A2.47	BLDG. TYPE 2 - ELEVATOR PLANS & SECTIONS			02/08/2019
A2.48	ELEVATOR DETAILS			02/08/2019
A2.49	ELEVATOR DETAILS			02/08/2019
A3.01	STUDIO UNIT - S1			02/08/2019
A3.02	1 BR UNIT PLANS - A1			02/08/2019
A3.03	1 BR UNIT PLANS - A1S			02/08/2019
A3.04	2 BR UNIT PLANS - B1			02/08/2019
A3.05	2 BR UNIT PLANS - B2			02/08/2019
A3.06	2 BR UNIT PLANS - B2S			02/08/2019
A3.07	3 BR UNIT PLANS - C1			02/08/2019
A3.08	3 BR UNIT PLANS - C1			02/08/2019
A3.10	ENLARGED PLANS - KITCHEN			02/08/2019
A3.11	ENLARGED PLANS - BATHROOM			02/08/2019
A3.12	ENLARGED PLANS - BATHROOM			02/08/2019
A3.13	BATH, AND LAUNDRY REQ.			02/08/2019
A3.14	KITCHEN REQ.			02/08/2019
A3.15	FINISH SCHEDULES			02/08/2019
A4.03	BUILDING TYPE 2 - FRONT & REAR ELEVATIONS			02/08/2019
A4.04	BUILDING TYPE 2 - RIGHT & LEFT ELEVATIONS			02/08/2019
A4.12	BUILDING TYPE 2 - AXONOMETRICS			02/08/2019
A4.20	BALCONY - PLANS AND ELEVATIONS			02/08/2019
A4.26	TRELLIS DETAILS			02/08/2019
A4.52	BUILDING TYPE 2 - SECTIONS			02/08/2019
A4.53	BUILDING TYPE 2 - SECTIONS			02/08/2019
A5.01	WALL SECTION DETAILS			02/08/2019

INDEX OF DRAWINGS - BUILDING TYPE 2

SHT #	SHEET NAME	REV. No.	REV. DATE	ISSUE DATE
A5.02	WALL SECTION DETAILS			02/08/2019
A5.03	WALL SECTION DETAILS			02/08/2019
A5.04	PENETRATION AND FLASHING DETAILS			02/08/2019
A5.05	ROOF DETAILS			02/08/2019
A5.06	ROOF DETAILS			02/08/2019
A5.14	BALCONY WATERPROOFING DETAILS			02/08/2019
A6.01	PLAN DETAILS			02/08/2019
A6.02	PLAN DETAILS			02/08/2019
A7.01	DOOR SCHEDULE AND DETAILS			02/08/2019
A7.02	WINDOW SCHEDULE AND DETAILS			02/08/2019
A7.03	WINDOW AND DOOR TAPING PROCEDURES			02/08/2019
50				
05 - STRUCTURAL				
S1.06	BUILDING TYPE 2 - FOUNDATION PLAN			02/08/2019
S1.06a	BUILDING TYPE 2 - POST TENSION PLAN			02/08/2019
S1.06b	BUILDING TYPE 2 - UPLIFT ROD PLAN			02/08/2019
S1.06c	BUILDING TYPE 2 - TRUSS TO WALL LOADING PLAN			02/08/2019
S1.07	BUILDING TYPE 2 - LEVEL 2 FRAMING PLAN			02/08/2019
S1.07a	BUILDING TYPE 2 - TRUSS LOADING PLAN			02/08/2019
S1.08	BUILDING TYPE 2 - LEVEL 3 FRAMING PLAN			02/08/2019
S1.09	BUILDING TYPE 2 - LEVEL 4 FRAMING PLAN			02/08/2019
S1.10	BUILDING TYPE 2 - ROOF FRAMING PLAN			02/08/2019
S1.10a	BUILDING TYPE 2 - TRUSS LOADING PLAN			02/08/2019
S2.01	STRUCTURAL NOTES & SCHEDULES			02/08/2019
S2.02	SCHEDULES AND TYPICAL DETAILS			02/08/2019
S2.03	TYPICAL CONTINUOUS TIE ROD DETAILS			02/08/2019
S2.04	SCHEDULES AND TYPICAL DETAILS			02/08/2019
S2.05	SCHEDULES AND TYPICAL DETAILS			02/08/2019
S3.01	FOUNDATION SECTIONS			02/08/2019
S3.02	STRUCTURAL FRAMING SECTIONS			02/08/2019
S3.03	STRUCTURAL FRAMING SECTIONS			02/08/2019
S3.04	STRUCTURAL FRAMING SECTIONS			02/08/2019
19				
07 - MECHANICAL				
M0.01	SYMBOL LEGEND MECHANICAL			02/08/2019
M3.01	BUILDING TYPE 2 - GROUND FLOOR PLAN - MECHANICAL			02/08/2019
M3.02	BUILDING TYPE 2 - LEVEL 2 PLAN - MECHANICAL			02/08/2019
M3.03	BUILDING TYPE 2 - LEVEL 3 PLAN - MECHANICAL			02/08/2019
M3.04	BUILDING TYPE 2 - LEVEL 4 PLAN - MECHANICAL			02/08/2019
M3.05	BUILDING TYPE 2 - ROOF - MECHANICAL			02/08/2019
M4.01	ENLARGED TYPICAL UNIT PLANS - MECHANICAL			02/08/2019
M4.02	ENLARGED TYPICAL UNIT PLANS - MECHANICAL			02/08/2019
M4.03	ENLARGED TYPICAL UNIT PLANS - MECHANICAL			02/08/2019
M5.01	SCHEDULES - MECHANICAL			02/08/2019
M6.01	DETAILS - MECHANICAL			02/08/2019
M6.02	DETAILS - MECHANICAL			02/08/2019
M6.03	DETAILS - MECHANICAL			02/08/2019
M7.01	RISERS - MECHANICAL			02/08/2019
M8.01	SPECIFICATIONS - MECHANICAL			02/08/2019
15				

INDEX OF DRAWINGS - BUILDING TYPE 2

SHT #	SHEET NAME	REV. No.	REV. DATE	ISSUE DATE
09 - ELECTRICAL				
E0.01	SYMBOL LEGEND AND GENERAL NOTES			02/08/2019
E1.01	SITE PLAN - ELECTRICAL			02/08/2019
E1.02	SITE PLAN - LIGHTING			02/12/19
E1.03	SITE PLAN - PHOTOMETRICS			02/12/19
E1.04	SITE FIXTURE CUT SHEETS			02/12/19
E3.01	BUILDING TYPE 2 - GROUND FLOOR PLAN - POWER AND SYSTEMS			02/08/2019
E3.02	BUILDING TYPE 2 - SECOND FLOOR PLAN - POWER AND SYSTEMS			02/08/2019
E3.03	BUILDING TYPE 2 - THIRD FLOOR PLAN - POWER AND SYSTEMS			02/08/2019
E3.04	BUILDING TYPE 2 - FOURTH FLOOR PLAN - POWER AND SYSTEMS			02/08/2019
E3.05	BUILDING TYPE 2 - ROOF ELECTRICAL			02/08/2019
E3.06	BUILDING TYPE 2 - GROUND FLOOR PLAN - LIGHTING			02/08/2019
E3.07	BUILDING TYPE 2 - SECOND FLOOR PLAN - LIGHTING			02/08/2019
E3.08	BUILDING TYPE 2 - THIRD FLOOR PLAN - LIGHTING			02/08/2019
E3.09	BUILDING TYPE 2 - FOURTH FLOOR PLAN - LIGHTING			02/08/2019
E4.01	ENLARGED TYPICAL UNIT PLANS - ELECTRICAL			02/08/2019
E4.02	ENLARGED TYPICAL UNIT PLANS - ELECTRICAL			02/08/2019
E4.03	ENLARGED TYPICAL UNIT PLANS - ELECTRICAL			02/08/2019
E4.04	ENLARGED PLANS - ELEVATORS			02/08/2019
E5.03	RISER DIAGRAMS - ELECTRICAL			02/08/2019
E5.04	RISER DIAGRAMS - ELECTRICAL			02/08/2019
E6.01	SCHEDULES ELECTRICAL			02/08/2019
E6.02	SCHEDULES ELECTRICAL			02/08/2019
E6.03	SCHEDULES - ELECTRICAL			02/08/2019
E6.04	DETAILS - ELECTRICAL			02/08/2019
E6.05	DETAILS - ELECTRICAL			02/08/2019
25				
11 - PLUMBING				
P0.01	SYMBOL LEGEND & NOTES - PLUMBING			02/08/2019
P3.01	BUILDING TYPE 2 - GROUND LEVEL PLAN - PLUMBING			02/08/2019
P3.02	BUILDING TYPE 2 - LEVEL 2 PLAN - PLUMBING			02/08/2019
P3.03	BUILDING TYPE 2 - LEVEL 3 PLAN - PLUMBING			02/08/2019
P3.04	BUILDING TYPE 2 - LEVEL 4 PLAN - PLUMBING			02/08/2019
P3.05	BUILDING TYPE 2 - ROOF - PLUMBING			02/08/2019
P4.01	ENLARGED TYPICAL UNIT PLANS - PLUMBING			02/08/2019
P4.02	ENLARGED TYPICAL UNIT PLANS - PLUMBING			02/08/2019
P4.03	ENLARGED TYPICAL UNIT PLANS - PLUMBING			02/08/2019
P5.01	SCHEDULES - PLUMBING			02/08/2019
P6.01	RISER DIAGRAMS - PLUMBING			02/08/2019
P6.02	RISER DIAGRAMS - PLUMBING			02/08/2019
12				
12 - FIRE PROTECTION				
FP0.01	SYMBOL, LEGEND, & GEN NOTES - FIRE PROTECTION			02/08/2019
FP3.01	BUILDING TYPE 2 - GROUND FLOOR PLAN - FIRE PROTECTION			02/08/2019
FP3.02	BUILDING TYPE 2 - LEVEL 2 PLAN - FIRE PROTECTION			02/08/2019
FP3.03	BUILDING TYPE 2 - LEVEL 3 PLAN - FIRE PROTECTION			02/08/2019
FP3.04	BUILDING TYPE 2 - LEVEL 4 PLAN - FIRE PROTECTION			02/08/2019
FP3.05	BUILDING TYPE 2 - ROOF - FIRE PROTECTION			02/08/2019
FP4.01	APARTMENT DETAILS - FIRE PROTECTION			02/08/2019
7				

PLANS FOR INSPECTORS USE ONLY
MUST BE ON JOB SITE DURING INSPECTION

2018100812
2018100815
2018100816
2018100818

PLANS FOR INSPECTORS USE ONLY
MUST BE ON JOB SITE DURING CONSTRUCTION
BLDG 3.5.19
ELEC 3.5.19
FIRE 1.16.19 MG ABSA
MECH 3.5.19
PLUMB 1.24.19
GAS N/A
LAKE COUNTY BUILDING DIVISION
Any errors or omissions in these plans shall be made to conform with the applicable code requirements per FBC section 105.4.1.
Plans were reviewed for code compliance as required by FBC 107.3.5.

LAKE COUNTY BUILDING SERVICES
Any errors or omissions in these plans shall be made to conform with the applicable code requirements per Florida Building Code, in accordance with Section 107. Plans were reviewed for code compliance and shall be kept on job site.

RECEIVED FEB 14 2019

ISSUE HISTORY

No.	Date	Description
1	02/08/2019	ISSUE FOR PERMIT

REVISION HISTORY

No.	Date	Description

FUGLEBERG KOCH
2555 Temple Trail, Winter Park, FL 32789 (407) 629-0595
www.fuglebergkoch.com AA26002103

CONSULTANT

MICHAEL E. GOVE
FLORIDA LICENSE # AR94111
STATE OF FLORIDA MICHAEL E. GOVE AR94111 REGISTERED ARCHITECT
02/08/2019

SUMMER BAY APTS. II
LAKE COUNTY, FL

Drawn:	VP/MK/WK
Checked:	MG
Approval:	MG
Date:	Issue Date
Project #:	5389

COVER SHEET
BUILDING TYPE 2

A0.01b

PLOTTED: 2/12/2019 11:56:49 AM

2018100812 & 2018100815

© 2017 These documents and their contents are the property of FUGLEBERG KOCH - AA26002103, and are issued only for the specific project noted on these drawings. Any reproductions, revisions, or modifications of these documents without the expressed written consent of Fugleberg Koch, is prohibited by law.

BUILDING CODE ANALYSIS - 2017 FLORIDA BUILDING CODE, 6TH EDITION

CODE SUMMARY

APPLICABLE CODES

1. BUILDING CODE: 2017 FLORIDA BUILDING CODE
2. PLUMBING CODE: 2017 PLUMBING CODE
3. ENERGY CODE: 2017 FLORIDA ENERGY CONSERVATION CODE AND AMMENDMENTS
4. MECH. CODE: 2017 FLORIDA MECHANICAL CODE
5. LIFE SAFETY: NFPA 101, 2015 EDITION
6. FIRE CODE: 2017 FLORIDA FIRE PREVENTION CODE
7. ELEC. CODE: 2014 NATIONAL ELECTRIC CODE
8. ACCESSIBILITY CODE REFERENCE: 2017 FLORIDA BUILDING CODE, ACCESSIBILITY FHA - FAIR HOUSING ACCESSIBILITY GUIDELINES ANSI A117.1.7, 2003 EDITION
9. NFPA 101, STANDARD FOR PORTABLE FIRE EXTINGUISHERS, 2015 EDITION

GENERAL CODE PARAMETERS

APARTMENTS

DESCRIPTION	REQUIRED OR ALLOWABLE	THIS PROJECT	REFERENCE	REMARKS
WIND SPEED	139 MPH	139 MPH	SEC. 1609	ULTIMATE
CONVERSION	101 MPH		TABLE 1609.3.1	
SEISMIC ZONE	N/A	N/A	SEC. 1613	
SNOW LOAD	N/A	N/A	SEC. 1608	
FROST DEPTH	N/A	N/A	SEC 1805.2.1	

COMPONENTS AND CLADDING PRESSURES:(NET, SEE PRESSURE ZONE DETAILS ON STRUCTURAL DRAWINGS

BUILDING CODE PARAMETERS - [FBC 2017]

DESCRIPTION	REQUIRED (Table 503)	ALLOWABLE (w/ increases)	THIS PROJECT: APARTMENT BUILDING TYPE I	THIS PROJECT: APARTMENT BUILDING TYPE II	REFERENCE (FBC)	REMARKS
CONSTRUCTION TYPE	TYPE V(A)		TYPE V(A)	TYPE V(A)		
USE / OCCUPANCY			R-2	R-2	CH. 3 & 4	
FIRE RATING			1 HR	1 HR	TABLE 601	SEE TABLE
OCCUPANCY SEPARATION	1 HR	--	1 HR	1 HR	TABLE 508.4	SEE NOTE #1 & #2
SPRINKLER	YES	--	NFPA 13R	NFPA 13R	SEC 903	
LEVEL 1 (GROUND)	12,000 SF	21,000 SF	15,557 SF	14,751 SF	TABLE 506.2	SEE MODIFICATIONS
LEVEL 2	12,000 SF	21,000 SF	15,510 SF	14,720 SF	TABLE 506.2	SEE MODIFICATIONS
LEVEL 3	12,000 SF	21,000 SF	15,510 SF	14,720 SF	TABLE 506.2	SEE MODIFICATIONS
LEVEL 4	12,000 SF	21,000 SF	15,510 SF	14,720 SF	TABLE 506.2	SEE MODIFICATIONS
TOTAL GROSS AREA	48,000 SF	84,000 SF	**62,086 SF**	**58,912 SF**	TABLE 506.2	SEE MODIFICATIONS
MEZZ/LOFT INCL	--	--	N/A	N/A	TABLE 506.2	
HEIGHT LIMIT (S)	3 STORIES	4 STORIES	4 STORIES	4 STORIES	TABLE 506.4	SEE MODIFICATIONS
HEIGHT LIMIT (FT)	50'-0"	70'-0"	51'-7"	51'-7"	TABLE 506.3	SEE MODIFICATIONS
MIN No. OF EXITS	2	--	2	2	TABLE 1006.3.1	SEE NOTE #3
MIN. HALLWAY WIDTH	44 INCHES	--	70 INCHES	70 INCHES	S. 1005.2 / T. 1020.2	
MIN. STAIR WIDTH	44 INCHES	--	44 INCHES	44 INCHES	S. 1005.3.1 / 1011.2	

NOTES:

1) OCCUPANCY SEPARATION AT DWELLING UNITS PER SECTION 420.2 -> 708 (VERTICAL-WALLS) & 711 (HORIZONTAL-FLOORS) = 1 HR

2) 711.2.2 CONTINUITY - ASSEMBLIES SHALL BE CONTINUOUS WITHOUT OPENINGS, PENETRATIONS OR JOINTS EXCEPT AS PERMITTED BY THIS SECTION AND SECTION 702

3) TWO (2) STAIRS ARE PROVIDED IN 2-HR RATED EXIT ENCLOSURE.

4) ALL UNITS EXIT INTO A 30 MIN. RATED EXIT ACCESS CORRIDOR PER 1020.1

BUILDING AREA MODIFICATION APARTMENTS

BUILDING TYPE I & II

(BUILDING AREA MODIFICATIONS PER SECTION 506)

AREA INCREASE: $A_a = \{A_t + [A_t \times I_f] + [A_t \times I_s]\}$

$I_f = \{[F / P - 0.25] \ W / 30\}$

$= \{[700'-10" / 700'-10" - 0.25] \ 30' / 30'\}$

$= 0.75$

$A_a = \{12{,}000 + [12{,}000 \times 0.75] + [12{,}000 \times 0]\}$

$= 21{,}000$ SF PER STORY

** BUILDING HEIGHT MODIFICATION APARTMENTS (R-2)

FOR GROUP R BUILDINGS EQUIPPED THROUGHOUT WITH AN APPROVED AUTOMATIC SPRINKLER SYSTEM IN ACCORDANCE WITH SECTION 903.3.1.2 (NFPA 13R), THE VALUE SPECIFIED IN TABLE 503 FOR MAXIMUM HEIGHT IS INCREASED BY 20 FEET (6096 MM) AND THE MAXIMUM NUMBER OF STORIES IS INCREASED BY ONE STORY, BUT SHALL NOT EXCEED FOUR STORIES OR 60 FEET (18 288 MM), RESPECTIVELY.

FIRE-RESISTANCE RATING REQUIREMENTS (PER TABLE 601)

APARTMENTS - V(A)

	N/A REQ'D	N/A PROV	V(A) REQ'D	V(A) PROV
STRUCTURAL FRAME: INCLUDING COLUMNS, GIRDERS, TRUSSES	--	--	1	1
BEARING WALLS: EXTERIOR (PER TABLE 601/602/704.10)	--	--	1	1
BEARING WALLS: INTERIOR	--	--	1	1
NONBEARING WALLS AND PARTITIONS: EXTERIOR (PER TABLE 601/602)	--	--	0	0
NONBEARING WALLS AND PARTITIONS: INTERIOR (PER SECTION 601)	--	--	0	0
FLOOR CONSTRUCTION not INCLUDING SUPPORTING BEAMS AND JOISTS per EXCEPTION 2 of 7.12.4	--	--	1	1
ROOF CONSTRUCTION	--	--	1	1
SEPARATION DISTANCE (PER TABLE 602) ≥ 30'	--	--	0	0

INTERIOR FINISH CLASSIFICATION

PER FBC 2017 SECTION 803.1.1 & TABLE 803.9, ALL ROOMS AND ENCLOSED SPACES SHALL BE OF A CLASS C FINISH.

PER NFPA 101 SECTION 10.2, TABLE 10.2.2, ALL NEW APARTMENT EXIT ACCESS CORRIDORS ARE FINISH CLASS C AND ALL EXITS ARE FINISH CLASS C. ALL FLOOR FINISH AS SCHEDULED TO BE PER SECTION 804.

ALL INTERIOR FINISHES SHALL ALSO COMPLY WITH FBC 2017 SECTION 1210.1.

MAXIMUM AREA OF EXTERIOR WALL OPENINGS:

FROM TABLE 705.8 - [FBC 2017- BUILDING]

ASSUMED PROPERTY LINE DISTANCE:	
NORTH	30'-0"
EAST	30'-0"
SOUTH	30'-0"
WEST	30'-0"

	ALLOWABLE	ACTUAL (WORST CASE)
UNPROTECTED, NONSPRINKLERED (UP, NS)		
0 FT TO 3 FT	NP	NA
OVER 3 FT TO 5 FT	NP	NA
OVER 5 FT TO 10 FT	10%	NA
OVER 10 FT TO 15 FT	15%	NA
OVER 15 FT TO 20 FT	25%	NA
OVER 20 FT TO 25 FT	45%	NA
OVER 25 FT TO 30 FT	70%	NA
OVER 30 FT FROM ASSUMED PROPERTY LINE	NL	NL
UNPROTECTED, SPRINKLERED (UP, S) / PROTECTED (P)		
0 FT TO 3 FT	NP	NP
OVER 3 FT TO 5 FT	15%	--
OVER 5 FT TO 10 FT	25%	--
OVER 10 FT TO 15 FT	45%	--
OVER 15 FT TO 20 FT	75%	--
OVER 20 FT TO 25 FT	NL	NL
OVER 25 FT TO 30 FT	NL	NL
OVER 30' FROM ASSUMED PROPERTY LINE	**NR**	**NR**

BLOWER DOOR TEST

PERFORM MANDATORY ENVELOPE LEAK TESTING PER THE 2017 FLORIDA ENERGY CONSERVATION CODE PARAGRAPH R402.4.1.2.

SPECIFICALLY, THE BUILDING OR DWELLING UNIT SHALL BE TESTED AND VERIFIED AS HAVING AN AIR LEAKAGE RATE NOT EXCEEDING 7 AIR CHANGES PER HOUR AT .2" WC.

PROVIDE A WRITTEN REPORT OF THE TEST RESULTS SIGNED BY THE CONDUCTING PARTY TO THE CODE OFFICIAL.

SEE R402.4.1.2 FOR MORE TECHNICAL SPECIFICS.

WHERE REQUIRED BY THE CODE OFFICIAL, TESTING SHALL BE CONDUCTED BY AN APPROVED THIRD PARTY.

PERFORM TESTING AT ANY TIME AFTER CREATION OF ALL PENETRATIONS OF THE BUILDING ENVELOPE.

THE GENERAL CONTRACTOR AND SUB-CONTRACTORS ARE RESPONSIBLE FOR OBTAINING PASSING RESULTS AT NO ADDITIONAL COST TO THE OWNER.

DRAFTSTOPPING & FIREBLOCKING

FIREBLOCKING AND DRAFTSTOPPING SHALL BE INSTALLED IN COMBUSTIBLE CONCEALED LOCATIONS IN ACCORDANCE WITH THIS SECTION. FIREBLOCKING SHALL COMPLY WITH SECTION 718.2. DRAFTSTOPPING IN FLOOR/CEILING SPACES AND ATTIC SPACES SHALL COMPLY WITH SECTIONS 718.3 AND 718.4, RESPECTIVELY.

CONTRACTOR MAY CHOOSE TO ELIMINATE DRAFTSTOPPING IF A NFPA 13R SPRINKLE SYSTEM IS INSTALLED IN THOSE AREAS WHERE DRAFSTOPPING IS OMITTED.

MEANS OF EGRESS - [FBC TABLE 1016.2]

OCCUPANCY CLASSIFICATION	LOCATION	MAX. EXIT ACCESS TRAVEL DISTANCE (ALLOWABLE): UNSPRINK.	MAX. EXIT ACCESS TRAVEL DISTANCE (ALLOWABLE): SPRINK.	MAX. TRAVEL DISTANCE (ACTUAL)	REMARKS
R-2	BUILDING I	200'	250'	78'-11"	
R-2	BUILDING II	200'	250'	72'-10"	

OCCUPANT LOAD TABLE 1004.1.2

BUILDING I - OCCUPANTS / TYPICAL FLOOR

SPACE NAME	FUNCTION OF SPACE	FLOOR AREA	AREA PER OCCUPANT	OCCUPANT PER UNIT
UNIT A1	RESIDENTIAL	810 SF	200 GROSS	5(2) = 10
UNIT A1-S	RESIDENTIAL	810 SF	200 GROSS	5(4) = 20
UNIT B1	RESIDENTIAL	1,410 SF	200 GROSS	8(4) = 32
UNIT C1	RESIDENTIAL	1,398 SF	200 GROSS	7(2) = 14
UNIT S1	RESIDENTIAL	614 SF	200 GROSS	4(1) = 4
TOTAL				80

OCCUPANT LOAD TABLE 1004.1.2

BUILDING II - OCCUPANTS / TYPICAL FLOOR

SPACE NAME	FUNCTION OF SPACE	FLOOR AREA	AREA PER OCCUPANT	OCCUPANT PER UNIT
UNIT A1	RESIDENTIAL	810 SF	200 GROSS	5(2) = 10
UNIT A1-S	RESIDENTIAL	810 SF	200 GROSS	5(3) = 15
UNIT B1	RESIDENTIAL	1,410 SF	200 GROSS	8(4) = 32
UNIT B2	RESIDENTIAL	1,095 SF	200 GROSS	6(1) = 6
UNIT B2-S	RESIDENTIAL	1,095 SF	200 GROSS	6(1) = 6
UNIT C1	RESIDENTIAL	1,398 SF	200 GROSS	7(1) = 7
TOTAL				76

ENERGY CONSERVATION REQUIREMENTS

2017 F.B.C. - ENERGY CONSERVATION
CHAPTER 402.4

THE BUILDING THERMAL ENVELOPE SHALL BE DURABLY SEALED TO LIMIT INFILTRATION. THE SEALING METHODS BETWEEN DISSIMILAR MATERIALS SHALL ALLOW FOR DIFFERENTIAL EXPANSION AND CONTRACTION.

THE FOLLOWING SHALL BE CAULKED, GASKETED, WEATHERSTRIPPED OR OTHERWISE SEALED WITH AN AIR BARRIER MATERIAL, SUITABLE FILM OR SOLID MATERIAL:

1- ALL JOINTS, SEAMS AND PENETRATIONS
2- SITE-BUILT WINDOWS, DOORS AND SKYLIGHTS.
3- OPENINGS BETWEEN WINDOWS AND DOOR ASSEMBLIES AND THEIR RESPECTIVE JAMBS AND FRAMING.
4- UTILITY PENETRATIONS.
5- DROPPED CEILINGS OR CHASES ADJACENT TO THE THERMAL ENVELOPE.
6- KNEE WALLS.
7- WALLS AND CEILINGS SEPARATING A GARAGE FROM CONDITIONED SPACES.
8- BEHIND TUBS AND SHOWERS ON EXTERIOR WALLS
9- COMMON WALLS BETWEEN DWELLING UNITS.
10- ATTIC ACCESS OPENINGS.
11- RIM JOIST JUNCTIONS.
12- OTHER SOURCES OF INFILTRATION.

BALCONIES

1406.3 Balconies and similar projections.
Balconies and similar projections of combustible construction other than *fire-retardant-treated wood* shall be fire-resistance rated in accordance with Table 601 for floor construction or shall be of Type IV construction in accordance with Section 602.4 The aggregate length shall not exceed 50 percent of the buildings perimeter on each floor.

Exceptions:
3. Balconies and similar projections on buildings of Type III, IV and V construction shall be permitted to be of Type V construction, and shall not be required to have a *fire-resistance rating* where sprinkler protection is extended to these areas.
4. Where sprinkler protection is extended to the balcony areas, the aggregate length of the balcony on each floor shall not be limited.

[F] 903.3.1.2.1 Balconies and decks.
Sprinkler protection shall be provided for exterior balconies, decks and ground floor patios of dwelling units and sleeping units where the building is of Type V construction, provided there is a roof or deck above. Sidewall sprinklers that are used to protect such areas shall be permitted to be located such that their deflectors are within 1 inch (25 mm) to 6 inches (152 mm) below the structural members and a maximum distance of 14 inches (356 mm) below the deck of the exterior balconies and decks that are constructed of open wood joist construction.

FAIR HOUSING ACCESSIBILITY GUIDELINES REQUIREMENT SUMMARY

REQUIREMENT 1	ACCESSIBLE BUILDING ENTRANCE ON A ACCESSIBLE ROUTE
REQUIREMENT 2	ACCESSIBLE AND USABLE PUBLIC AND COMMON USE AREAS
REQUIREMENT 3	USEABLE DOORS
REQUIREMENT 4	ACCESSIBLE ROUTE INTO AND THROUGH THE COVERED DWELLING UNIT
REQUIREMENT 5	LIGHT SWITCHES, ELECTRICAL OUTLETS, THERMOSTATS, AND OTHER ENVIRONMENTAL CONTROLS IN ACCESSIBLE LOCATIONS
REQUIREMENT 6	REINFORCED WALLS FOR GRAB BARS
REQUIREMENT 7	USEABLE KITCHEN & BATHROOMS

FAIR HOUSING ACCESSIBILITY NOTES:

1. ALL UNITS ARE TO BE COMPLIANT PER THE FAIR HOUSING ACT (FHA).
2. ACCESSIBLE BUILDING ENTRANCES SHALL BE ON AN ACCESSIBLE ROUTE. 36" WIDE MIN. CLEAR PATH.
3. ACCESSIBLE AND USABLE PUBLIC AND COMMON USE AREAS SHALL BE PER CHAPTER TWO.
4. USABLE DOORS. ALL DOORS DESIGNED TO ALLOW PASSAGE INTO AND WITHIN ALL PREMISES MUST HAVE A 32" MIN. CLEAR WIDTH PER CHAPTER THREE.
5. THERE SHALL BE AN ACCESSIBLE ROUTE INTO AND THROUGH THE COVERED DWELLING UNIT. 36" WIDE MIN. CLEAR PATH.
6. ALL PREMISES WITHIN THE DWELLING UNIT MUST CONTAIN LIGHT SWITCHES, ELECTRICAL OUTLETS, THERMOSTATS AND OTHER ENVIRONMENTAL CONTROLS IN ACCESSIBLE LOCATIONS PER CHAPTER FIVE.
7. SHALL PROVIDE REINFORCED WALLS FOR FUTURE INSTALLATION OF GRAB BARS PER CHAPTER SIX.
8. USABLE KITCHENS AND BATHROOMS SHALL COMPLY WITH CHAPTER SEVEN.
9. ALL BATHROOMS SHALL BE ON AN ACCESSIBLE ROUTE.
10. ALL BATHROOMS SHALL HAVE A 32 INCH NOMINAL CLEAR WIDTH DOORWAY.
11. ALL BATHROOMS SHALL HAVE SWITCHES, OUTLETS, AND CONTROLS IN ACCESSIBLE LOCATIONS.
12. ALL BATHROOMS SHALL HAVE REINFORCING AROUND TOILETS, TUBS, AND SHOWERS.

FLORIDA PRODUCT APPROVAL CHECKLIST - [FBC 2017] (APARTMENTS)

CATEGORY / SUBCATEGORY	MANUFACTURER	PRODUCT DESCRIPTION	DESIGN PRESSURE +/-	WIND BORNE DEBRIS PROTECTION	APPROVAL NUMBER(S)
A. EXTERIOR DOORS					
SWINGING	JAMMER DOORS	WINDSOR REPUBLIC DL SERIES	+65 / -65	NO	FL 14963
SWINGING FRENCH	MASONITE	BELLEVIEW PATIO DOOR PDB-122-3105-X	+55.5 / -55.5	NO	FL 5507.1
SECTIONAL	OVERHEAD DOOR CO.	GARAGE DOOR SERIES 194	+31.8 / -35.5	NO	FL 11267.5
STOREFRONT	CORAL INDUSTRIES	MS380	+25 / -25	NO	FL 15784.1-R2
B. WINDOWS					
SINGLE HUNG	MI WINDOWS & DOORS	SINGLE HUNG SH-3500	N/A	NO	FL 12250.3-R11
FIXED	MI WINDOWS & DOORS	FIXED HP-PW-3500	N/A	NO	FL 11548.1-R6
C. PANEL WALL					
SIDING	JAMES HARDIE	HARDIE PLANK LAP SIDING	N/A	NO	FL 13192.2-R2
SIDING	JAMES HARDIE	HARDIE PANAL SIDING	N/A	NO	FL 1322.2-R1
SOFFITS	JAMES HARDIE	HARDIE SOFFIT	N/A	NO	FL 13265-R1
STOREFRONT	KAWNEER NA	TRIFAB 350 STOREFRONT	+30 / -30	NO	FL 10388.1-R2
D. ROOFING PRODUCTS					
UNDERLAYMENTS	W.R. GRACE	ICE & WATER SHIELD HT	N/A	NO	FL 298.1-R3
ROOFING	OWENS CORNING	TRUE DEF. DURATION	N/A	NO	FL 10674.1-R8
ROOFING	OWENS CORNING	VENT SURE ROOF VENTILATION	N/A	NO	FL 10758.3-R3
ROOFING	THOMPSON ARCH. METALS	OFF RIDGE VENT	N/A	NO	FL 5219.1-R2
TPO ROOF	GAF	60 MIL SINGLE-PLY ROOF	N/A	NO	FL 3443 - R6

MINIMUM FLAME SPREAD INTERIOR FINISHES

SPACE DESCRIPTION NONSPRINKLERED	WALLS AND CEILINGS	NOTE	FLOORS	NOTE
EXIT ENCLOSURES-EXIT PASSAGEWAYS	A	NONE IN PROJECT	CLASS II	NONE IN PROJECT
CORRIDORS	A	NONE IN PROJECT	CLASS II	NONE IN PROJECT
ROOMS AND ENCLOSED SPACES	C		DOCFF-1	"PILL TEST"

ARCHITECT'S STATEMENT (FL)

THRESHOLD BUILDING ONLY
SECTION 110.8.4.4

TO THE BEST OF THE ARCHITECT'S KNOWLEDGE, THE PLANS AND SPECIFICATIONS COMPLY WITH THE APPLICABLE MINIMUM BUILDING CODES AND APPLICABLE FIRE-SAFETY STANDARDS AS DETERMINED BY THE LOCAL AUTHORITY IN ACCORDANCE WITH THIS SECTION AND CHAPTER 633, FLORIDA STATUTES.

EGRESS WIDTH	OCCUPANCY CLASSIFICATION	LOCATION	TOTAL OCCUPANTS (PER OCCUPANT LOAD CALC.)	EGRESS WIDTH PER PERSON SERVED (REQ'D.)	EGRESS WIDTH PROVIDED
				STAIRWAYS (IN. PER OCCUPANT)	STAIRWAYS
	TYPE V(A)	BUILDING I	80/2 = 40 (WORST CASE)	0.3 (40 OCCUPANTS) = 12.0"	44.0"

EGRESS WIDTH	OCCUPANCY CLASSIFICATION	LOCATION	TOTAL OCCUPANTS (PER OCCUPANT LOAD CALC.)	EGRESS WIDTH PER PERSON SERVED (REQ'D.)	EGRESS WIDTH PROVIDED
				STAIRWAYS (IN. PER OCCUPANT)	STAIRWAYS
	TYPE V(A)	BUILDING II	76/2 = 38 (WORST CASE)	0.3 (40 OCCUPANTS) = 12.0"	44.0"

ARCHITECTURAL ABBREVIATIONS

A

ABV.	ABOVE
ACC.FL.	ACCESS FLOOR
ACOUST.	ACOUSTICAL
ACT	ACOUSTICAL CEILING TILE
A.D.	AREA DRAIN
ADJ.	ADJACENT
ADJUST.	ADJUSTABLE
AFF	ABOVE FINISHED FLOOR
ALT.	ALTERNATE
ALUM. / AL.	ALUMINUM
ANG.	ANGLE
ANOD.	ANODIZED
APPROX.	APPROXIMATE
ARCH.	ARCHITECTURAL
AUTO.	AUTOMATIC
AVG.	AVERAGE

B

BD.	BOARD
BLBD.	BLACK BOARD
BLDG.	BUILDING
BLK/BLK'G	BLOCK OR BLOCKING
BM.	BEAM
BOT.	BOTTOM
B.O.	BOTTOM OF
BRK.	BRICK
BSMT.	BASEMENT
BTWN	BETWEEN
B.U.	BUILT-UP
B.W.	BOTH WAYS

C

CAB.	CABINET
CB. / TB.	CORKBOARD/ TACKBOARD
C.B.	CATCH BASIN
CEM.	CEMENT
CER.	CERAMIC
C.H.	CEILING HEIGHT
CIR.	CIRCLE
C.J./	CONTROL JOINT
CLG.	CEILING
CLKG.	CAULKING
CL/℄	CENTER LINE
CLO.	CLOSET
CLR.	CLEAR
CMU.	CONCRETE MASONRY UNIT
C.O.	CLEAR OPENING
COL.	COLUMN
COMM.	COMMUNICATION
CONC.	CONCRETE
CONN.	CONNECTION
CONST.	CONSTRUCTION
CONTR.	CONTRACTOR
COOR.	COORDINATE
CONT.	CONTINUOUS
CPT.	CARPET
CSMT.	CASEMENT
C.T.	CERAMIC TILE
CTR.	CENTER

D

D.	DEPTH
DBL.	DOUBLE
DEG.	DEGREE
DET.	DETAIL
D.F.	DRINKING FOUNTAIN
DIA.	DIAMETER
DIAG	DIAGONAL
DIFF.	DIFFUSER
DIM.	DIMENSION
DISP.	DISPOSAL
DIV.	DIVIDER
DN.	DOWN
DR	DOOR
DRAP.	DRAPERY
DS.	DOWNSPOUT
DTL.	DETAIL
DWG.	DRAWING
DWR.	DRAWER
DW	DISHWASHER

E

E	EAST
EA.	EACH
E.F.	EACH FACE
E.J.	EXPANSION JOINT
E.I.F.S.	EXTERIOR INSULATION AND FINISH SYSTEM
EL. / ELEV.	ELEVATION
ELEC.	ELECTRICAL
ELEV.	ELEVATOR
EMER.	EMERGENCY
ENCL.	ENCLOSURE
EQ	EQUAL
EQUIP.	EQUIPMENT
E.W.	EACH WAY
E.W.C.	ELECTRIC WATER COOLER
EXIST.	EXISTING
EXP. JT	EXPANSION JOINT
EXT.	EXTERIOR
EXTRU.	EXTRUDED

F

F.A.	FIRE ALARM
F.D.	FLOOR DRAIN
F.D.C.	FIRE DEPARTMENT CONNECTION
FDN.	FOUNDATION
F.E.	FIRE EXTINGUISHER
F.E.C.	FIRE EXTINGUISHER CABINET
FED.	FEDERAL
F.F.	FINISH FLOOR
F.H.C.	FIRE HOSE CABINET
FIN.	FINISH
FIXT	FIXTURE
F.L.	FLOW LINE
FLR.	FLOOR
FLUOR	FLUORESCENT
F.O.B.	FACE OF BRICK
F.O.C.	FACE OF CONCRETE
F.O.F.	FACE OF FINISH
F.O.S.	FACE OF STUD
F.R.	FIRE RETARDANT
F.S.	FULL SIZE
FT.	FOOT OR FEET
FTG.	FOOTING
FURR	FURRING
FUT.	FUTURE
F.V.	FIELD VERIFY

G

GA.	GAUGE
GALV.	GALVANIZE
G.B.	GRAB BAR
G.C.	GENERAL CONTRACTOR
GEN.	GENERAL
GL	GLASS
GR.	GRADE
GYP.	GYPSUM

H

H.	HIGH
H.B.	HOSE BIBB
H.C.	HOLLOW CORE
H/C	HANDICAPPED
HD.	HEAD
HDW.	HARDWARE
HDWD.	HARDWOOD
H.M.	HOLLOW METAL
HORIZ.	HORIZONTAL
H.P.	HORSE POWER
HR	HOUR
HT.	HEIGHT
HVAC	HEATING, VENTILATION AND AIR CONDITIONING
HOL.	HOLLOW

I

IN.	INCHES
INSUL.	INSULATION
INT.	INTERIOR

J

JAN.	JANITOR
J.F.	JOINT FILLER
JNT.	JOINT
JST.	JOIST

K

KIT.	KITCHEN

L

L.	LONG OR LENGTH
LAB.	LABORATORY
LAM.	LAMINATE
LAV.	LAVATORY
LBL.	LABEL
L.H.	LEFT HAND
LIN	LINEN
L.L.V.	LONG LEG VERTICAL LINE
LN	LOW POINT
L.P.	LIGHT
LT.	LOUVER
LVR	

M

MAS.	MASONRY
MATL.	MATERIAL
MAX.	MAXIMUM
M.C.	MINERAL CORE
MECH.	MECHANICAL
MEMB.	MEMBRANE
MEZZ.	MEZZANINE
MFTR	MANUFACTURER
MGR.	MANAGER
M.H.	MANHOLE
MIN.	MINIMUM
MISC.	MISCELLANEOUS
MLDG.	MOLDING
MLWK.	MILLWORK
M.O.	MASONRY OPENING
M.R.	MOISTURE RESISTIVE
MRB.	MARBLE
M.T.	MARBLE THRESHOLD
MTD.	MOUNTED
MTL.	METAL
MULL.	MULLION

N

N	NORTH
N/A	NOT APPLICABLE
N.I.C.	NOT IN CONTRACT
NO.	NUMBER
NOM.	NOMINAL
N.T.S.	NOT TO SCALE

O

O.C.	ON CENTER
OD	OVERFLOW DRAIN
OH.	OVERHEAD
OPNG.	OPENING
OPP.	OPPOSITE

P

PART.	PARTITION
PH	PRE HUNG
PL.	PLATE
P.L.	PROPERTY LINE
P.LAM.	PLASTIC LAMINATE
PLAS.	PLASTER
PLYWD.	PLYWOOD
PNL.	PANEL
POL.	POLISHED
PR.	PAIR
PREC.	PRECAST
PREFAB.	PREFABRICATED
PROJ.	PROJECT
PROP.	PROPERTY
P.T.	PRESSURE TREATED
PTD.	PAINTED
PVC	POLYVINYL CHLORIDE
PVRS	PAVERS

Q

Q.T.	QUARRY TILE
QTY.	QUANTITY

R

R	RISER
RAD.	RADIUS
R.B.	RUBBER BASE
RCP	REFLECTED CEILING PLAN
RD	ROOF DRAIN
RE:	REFER TO...
REF.	REFRIGERATOR
REINF.	REINFORCED
REQD.	REQUIRED
REV.	REVISED / REVISION
RH	RIGHT HAND
RM	ROOM
R.O.	ROUGH OPENING

S

S	SOUTH
SAFB	SOUND ACOUSTICAL FIBER BOARD
S.C.	SOLID CORE
SCHED.	SCHEDULE
SECT.	SECTION
S.F.	SQUARE FOOT / FEET
SHLV./SH	SHELVING
SHT.	SHEET
SIM.	SIMILAR
SPEC.	SPECIFICATION
SQ.	SQUARE
SR	SEMI RECESSED
S.S.	STAINLESS STEEL
STAGG.	STAGGERED
STD.	STANDARD
STL.	STEEL
STN.	STAINED
STOR.	STORAGE
STRUCT.	STRUCTURAL
SUSP.	SUSPENDED
SYST.	SYSTEM

T

T	TREAD
T & G	TONGUE & GROOVE
TEMP GL.	TEMPERED GLASS
TER	TERRAZZO
TH.	THICK
T.O.	TOP OF
TOIL.	TOILET
TYP.	TYPICAL

U

U.O.N.	UNLESS OTHERWISE NOTED

V

VAR.	VARIES
V.B.	VINYL BASE
VCT	VINYL COMPOSITION TILE
VER.	VERIFY
VERT.	VERTICAL
V.I.F.	VERIFY IN FIELD

W

W	WEST / WIDE
W/	WITH
W.C.	WATER CLOSET
W/D	WASHER/DRYER COMBO
WD.	WOOD
WP.	WATER PROOF
W.R.	WATER RESISTANT
W/O	WITHOUT
WNF	WELDED WIRE FABRIC

PERMIT REVIEW STAMP

ISSUE HISTORY

No.	Date	Description
1	02/08/2019	ISSUE FOR PERMIT

REVISION HISTORY

No.	Date	Description

© 2017 These documents and the concepts & designs incorporated herein, as an instrument of service, are the property of FUGLEBERG KOCH ARCHITECTS, and are to be used only for the specific project stated on these drawings. Any reproductions, revisions, or modifications of these documents without the expressed written consent of Fugleberg Koch, is prohibited by law.

FUGLEBERG KOCH
2555 Temple Trail, Winter Park, FL 32789 (407) 629-0595
www.fuglebergkoch.com AA26002103
CONSULTANT

LAKE COUNTY BUILDING SERVICES
Any errors or omissions in these plans shall be made to conform with the applicable code requirements per Florida Building Code, in accordance with Section 107. Plans were reviewed for code compliance and shall be kept on job site.

MICHAEL E. GOVE
FLORIDA LICENSE # AR94111
STATE OF FLORIDA — MICHAEL E. GOVE — AR94111 — REGISTERED ARCHITECT
2/8/2019

SUMMER BAY APTS. II
LAKE COUNTY, FL

Drawn:	Author
Checked:	Checker
Approved:	Approver
Date:	Issue Date
Project #:	5389

CODE ANALYSIS

A0.02

RECEIVED FEB 14 2019

PLOTTED: 2/11/2019 2:26:55 PM

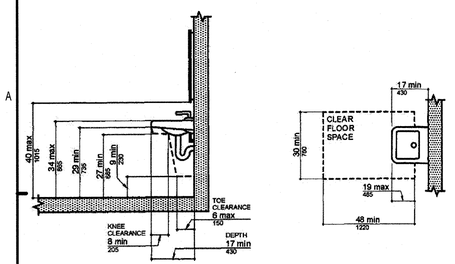

B1 LAVATORY CLEARANCES
3/8" = 1'-0"

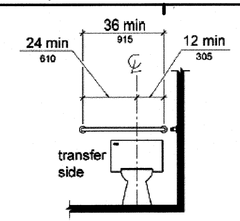

Figure 604.5.2
Rear Wall Grab Bar at Water Closets

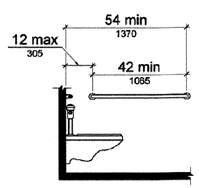

Figure 604.5.1
Side Wall Grab Bar at Water Closets

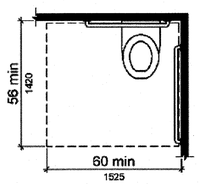

Figure 604.3.1
Size of Clearance at Water Closets

B3 TOILET CLEARANCES
3/8" = 1'-0"

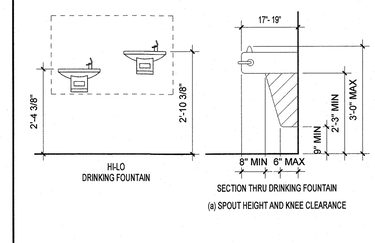

B7 DRINKING FOUNTAIN CLEARANCES
1/2" = 1'-0"

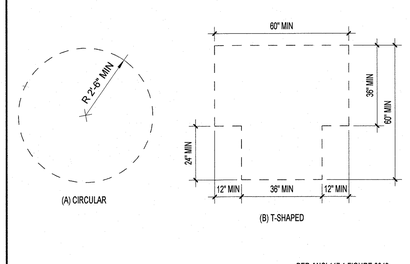

PER ANSI 117.1 FIGURE 3043

B9 SIZE OF TURNING SPACE
3/8" = 1'-0"

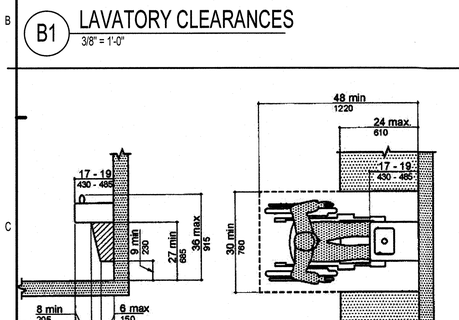

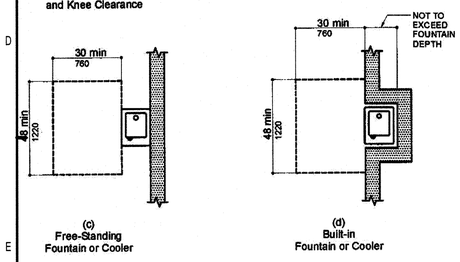

E1 WATER COOLER CLEARANCES
3/8" = 1'-0"

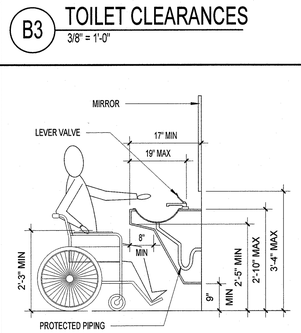

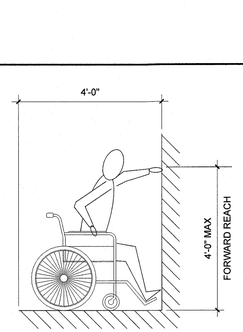

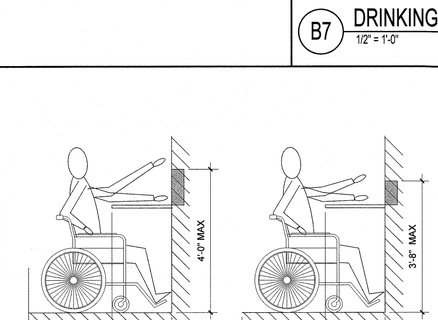

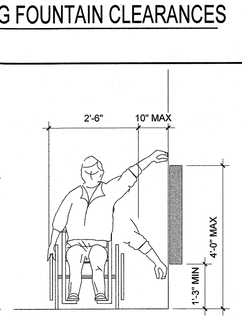

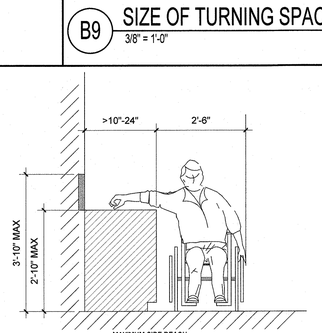

D3 REACH RANGES
1/2" = 1'-0"

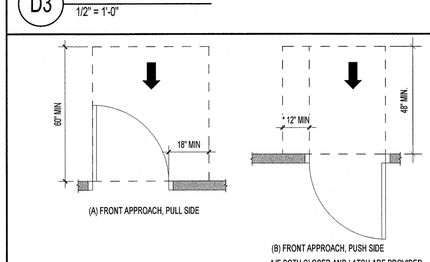

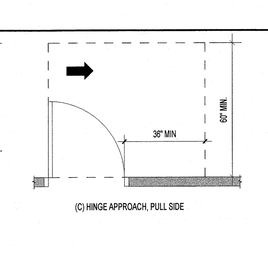

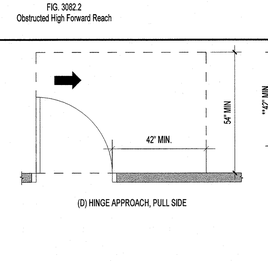

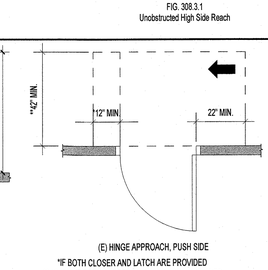

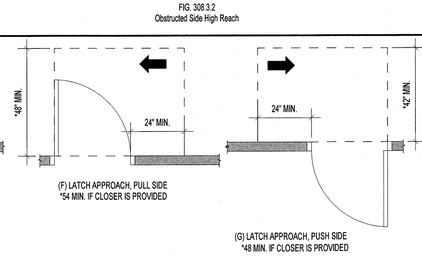

E3 MANEUVERING CLEARANCE AT SWING DOORS
3/8" = 1'-0"

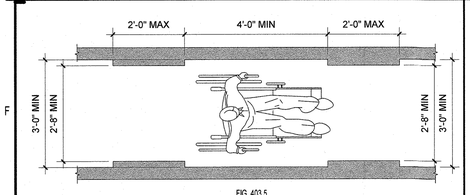

FIG. 403.5
Clear Width of an Accessible Route

G1 CLEAR SPACE OF AN ACCESSIBLE ROUTE
1/2" = 1'-0"

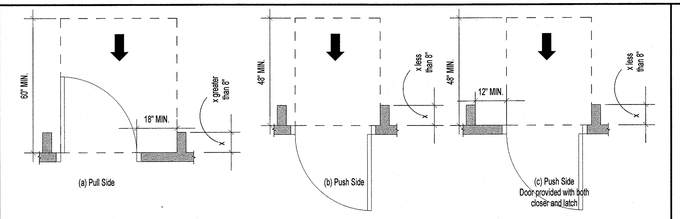

FIG. 404.2.3.4 Maneuvering Clearance at Recessed Doors

G3 MANEUVERING CLEARANCE AT RECESSED DOORS
3/8" = 1'-0"

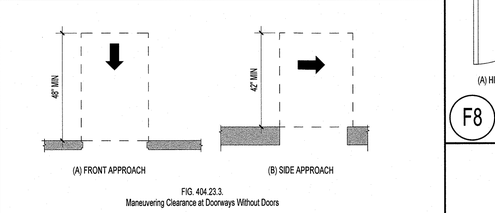

FIG. 404.2.3.
Maneuvering Clearance at Doorways Without Doors

G6 MANEUVERING CLEARANCE AT OPENINGS
3/8" = 1'-0"

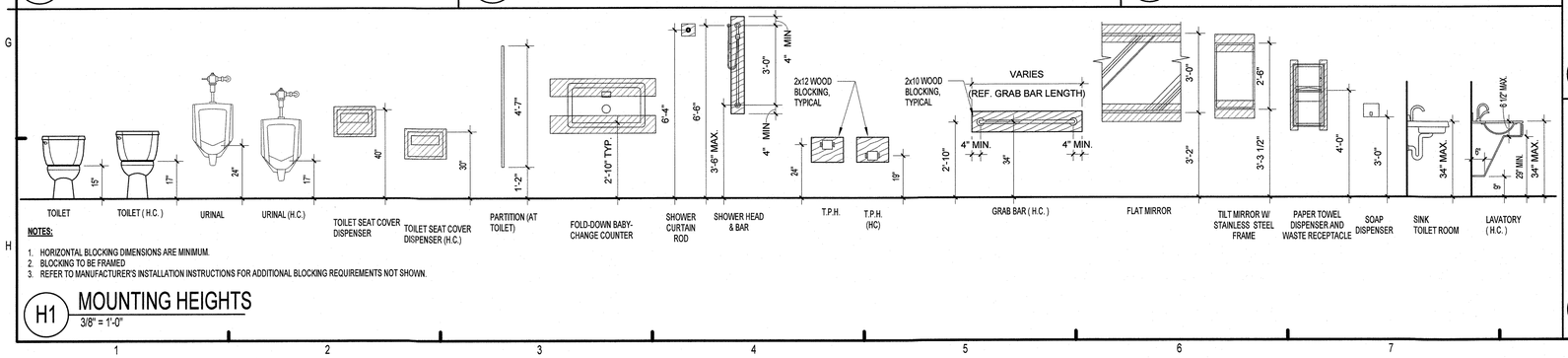

NOTES:

1. HORIZONTAL BLOCKING DIMENSIONS ARE MINIMUM.
2. BLOCKING TO BE FRAMED
3. REFER TO MANUFACTURER'S INSTALLATION INSTRUCTIONS FOR ADDITIONAL BLOCKING REQUIREMENTS NOT SHOWN.

H1 MOUNTING HEIGHTS
3/8" = 1'-0"

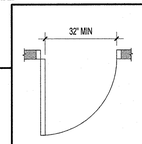

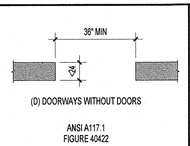

F8 DOORWAY CLEAR WIDTHS
3/8" = 1'-0"

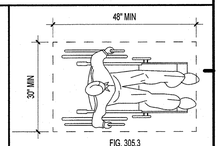

FIG. 305.3
Size of Clear Floor Space

F10 CLEAR SPACE
1/2" = 1'-0"

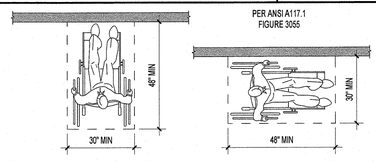

G8 POSITION OF CLEAR FLOOR SPACE
3/8" = 1'-0"

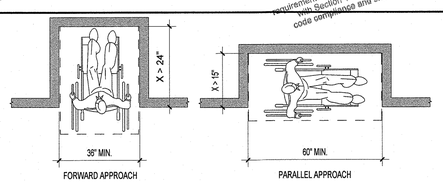

H8 POSITION OF CLEAR FLOOR SPACE ALCOVE
3/8" = 1'-0"

RECEIVED FEB 14 2019

LAKE COUNTY BUILDING SERVICES
Any errors or omissions in these plans shall be made to conform with the applicable code requirements per Florida Building Code, in accordance with Section 107. Plans were reviewed for code compliance and shall be kept on job site.

PERMIT REVIEW STAMP

ISSUE HISTORY

No.	Date	Description
1	02/08/2019	ISSUE FOR PERMIT

REVISION HISTORY

No.	Date	Description

These documents and their contents are the property of FUGLEBERG KOCH - AA26002103, and are issued only for the specific project noted on these drawings. Any reproductions, revisions, or modifications of these documents without the expressed written consent of Fugleberg Koch, is prohibited by law.
© 2017 These documents and their contents are the property of FUGLEBERG KOCH - AA26002103, and are issued only for the specific project noted on these drawings. Any reproductions, revisions, or modifications of these documents without the expressed written consent of Fugleberg Koch, is prohibited by law.

FUGLEBERG KOCH
2555 Temple Trail, Winter Park, FL 32789 (407) 629-0595
www.fuglebergkoch.com AA26002103
CONSULTANT

MICHAEL-EUGOVE
FUGLEBERG KOCH-AR94111
STATE OF FLORIDA
MICHAEL E. GOVE
REGISTERED ARCHITECT
AR94111
2/8/2019

SUMMER BAY APTS. II	Drawn: Author
LAKE COUNTY, FL	Checked: Checker
	Approved: Approver
	Date: Issue Date
	Project #: 5389

ACCESSIBLE DATA AND DETAILS

A0.03

PLOTTED: 2/11/2019 2:27:01 PM

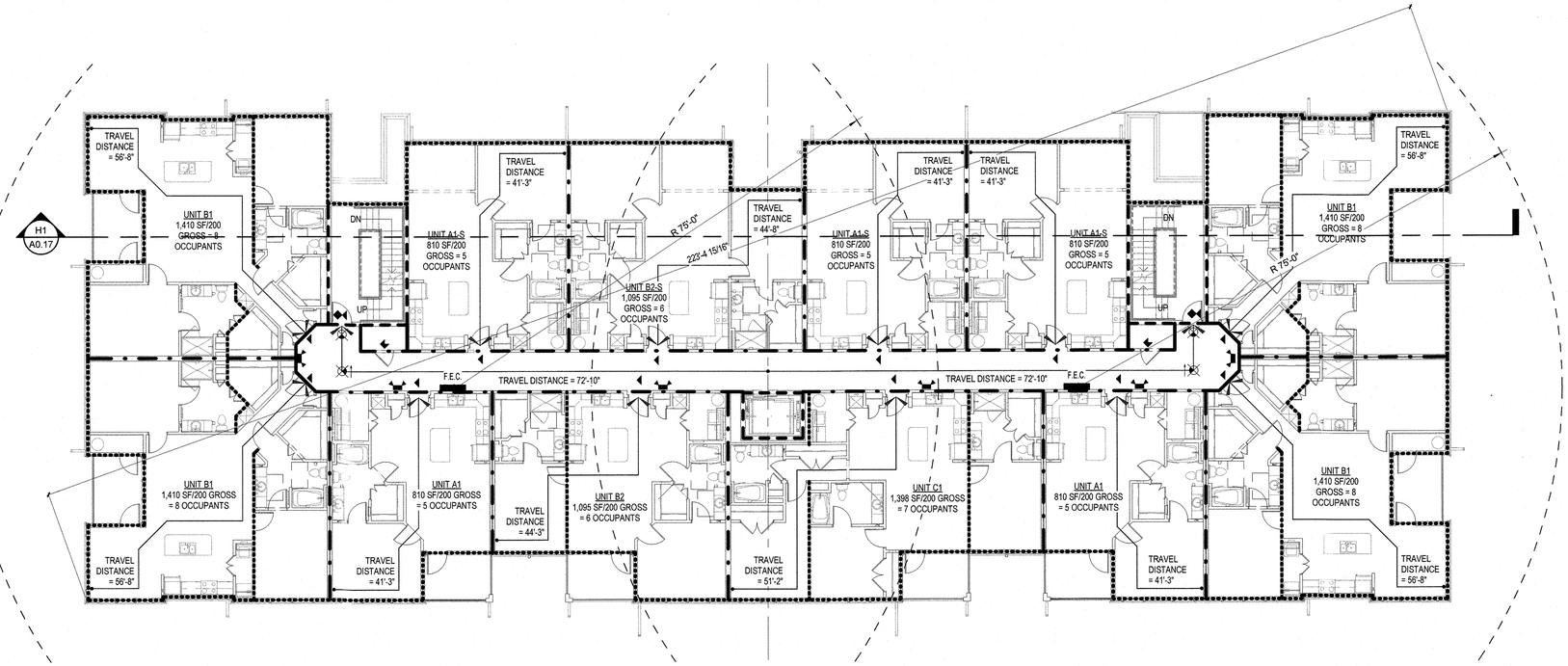

D1 BUILDING TYPE 2 - LEVEL 2 LIFE SAFETY PLAN

3/32" = 1'-0"

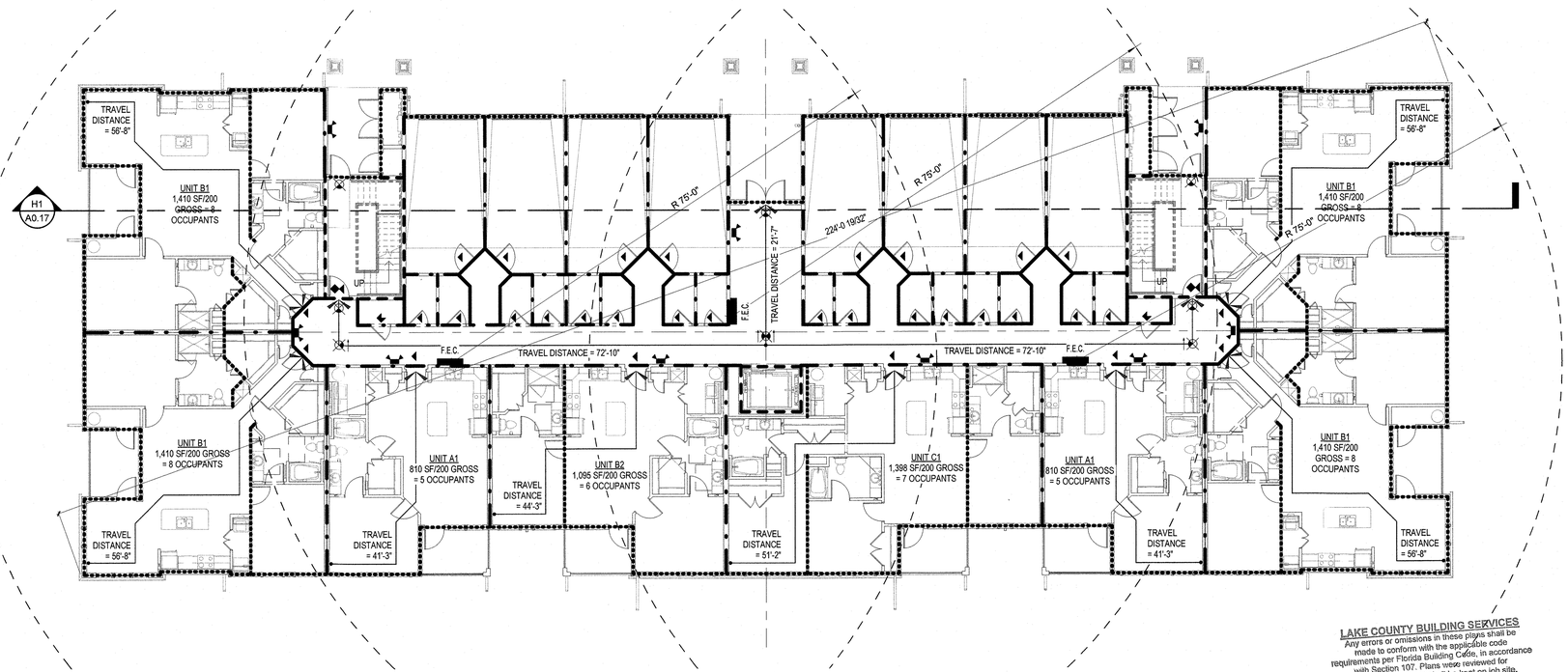

H1 BUILDING TYPE 2 - GROUND LEVEL LIFE SAFETY PLAN

3/32" = 1'-0"

LAKE COUNTY BUILDING SERVICES
Any errors or omissions in these plans shall be made to conform with the applicable code requirements per Florida Building Code, in accordance with Section 107. Plans were reviewed for code compliance and shall be kept on job site.

RECEIVED FEB 14 2019

LIFE SAFETY LEGEND

((XXX)) OCCUPANT LOAD

NOTES:
1. ALL UNIT DOOR CAPACITY - 180 PERSONS
2. ALL EXIT DOOR COMMON AREA CAPACITY - 180 PERSONS
   EXCEPTION:GROUND FLOOR ENTRY LOBBY DOORS - 360 PERSONS
3. 36" WIDE ACCESSIBLE ROUTE REQUIRED PER FAIR HOUSING.
4. ALL DOORS ON ACCESSIBLE ROUTE TO HAVE A MINIMUM CLEARANCE OF 2'-8" (32").

- EMERGENCY LIGHT
- TRAVEL DISTANCE TO EXIT
- F.E.C. — FIRE EXTINGUISHER VERIFY EXACT LOCATIONS AND TYPES WITH LOCAL FIRE OFFICIALS
- 20 MIN DOOR
- 45 MIN DOOR
- 60 MIN DOOR
- 90 MIN DOOR
- XXX/XXX = XXX — OCCUPANCY SYMBOL / CAPACITY / SQUARE FEET PER PERSON / GROSS AREA (SQUARE FEET)
- 36" ACCESSIBLE ROUTE
- INDICATES STRUCTURAL SHEAR WALL IN ADDITION TO FIRE RATING, SEE STRUCTURAL FOUNDATION PLAN AND FRAMING PLANS FOR SHEAR WALL TYPE AND STRUCTURAL SHEAR WALL SCHEDULE FOR REQUIRED MINIMUM SHEATHING
- REQUIRED 1 HOUR FIRE SEPARATION
- REQUIRED 2 HOUR FIRE SEPARATION
- REQUIRED 1 HOUR FIRE RATED BEARING WALL

PER SECTION FBC 718.2.2
PROVIDE FIREBLOCKING AT INTERVALS NOT EXCEEDING 10'-0"

TOTAL OCCUPANT LOAD PER LEVEL
LEVEL 1: 55 OCCUPANTS
LEVEL 2: 76 OCCUPANTS

AREA SCHEDULE - UNIT A1

NAME	AREA	BEDROOMS	BATHS	OCCUPANTS	LEVEL 1 - # UNITS	LEVEL 2 - # UNITS	LEVEL 3 - # UNITS	LEVEL 4 - # UNITS
UNIT A1	732 SF	1	1		2	2	2	2
BALCONY	78 SF							
TOTAL	810 SF	1	1	5	8			

AREA SCHEDULE - UNIT A1-S

NAME	AREA	BEDROOMS	BATHS	OCCUPANTS	LEVEL 1 - # UNITS	LEVEL 2 - # UNITS	LEVEL 3 - # UNITS	LEVEL 4 - # UNITS
UNIT A1-S	810 SF	1	1		--	3	3	3
BALCONY	--							
TOTAL	810 SF	1	1	5	9			

AREA SCHEDULE - UNIT B1

NAME	AREA	BEDROOMS	BATHS	OCCUPANTS	LEVEL 1 - # UNITS	LEVEL 2 - # UNITS	LEVEL 3 - # UNITS	LEVEL 4 - # UNITS
UNIT B1	1,295 SF	2	2		4	4	4	4
BALCONY	91 SF							
TOTAL	1,386 SF	2	2	8	16			

AREA SCHEDULE - UNIT B2

NAME	AREA	BEDROOMS	BATHS	OCCUPANTS	LEVEL 1 - # UNITS	LEVEL 2 - # UNITS	LEVEL 3 - # UNITS	LEVEL 4 - # UNITS
UNIT B2	1,017 SF	2	2		1	1	1	1
BALCONY	78 SF							
TOTAL	1,095 SF	2	2	6	4			

AREA SCHEDULE - UNIT B2-S

NAME	AREA	BEDROOMS	BATHS	OCCUPANTS	LEVEL 1 - # UNITS	LEVEL 2 - # UNITS	LEVEL 3 - # UNITS	LEVEL 4 - # UNITS
UNIT B2-S	1,095 SF	2	2		--	1	1	1
BALCONY	--							
TOTAL	1,095 SF	2	2	6	3			

AREA SCHEDULE - UNIT C1

NAME	AREA	BEDROOMS	BATHS	OCCUPANTS	LEVEL 1 - # UNITS	LEVEL 2 - # UNITS	LEVEL 3 - # UNITS	LEVEL 4 - # UNITS
UNIT C1	1,320 SF	3	3		1	1	1	1
BALCONY	78 SF							
TOTAL	1,398 SF	3	3	7	4			

LIFE SAFETY NOTES:

1. SEE SHEET A0.30 THRU A0.37 FOR ALL UNIT ASSEMBLY DESIGN DESCRIPTIONS.
2. SEE SHEET A0.20 FOR ASSEMBLY SOUND RATINGS
3. PROVIDE RECESSED PORTABLE FIRE EXTINGUISHERS AS REQUIRED BY NFPA 10 STANDARDS FOR PORTABLE FIRE EXTINGUISHERS' 2014 EDITION. VERIFY EXACT LOCATION AND F.E. TYPE WITH FIRE OFFICIAL
4. PROVIDE ONE 2-A: 10-B:C lb FIRE EXTINGUISHER PER UNIT. COORDINATE ACTUAL TYPE AND LOCATION PER FIRE DEPARTMENT REQUIREMENTS.
5. FIRE EXTINGUISHERS IN PUBLIC SPACES SHALL BE LOCATED WITHIN 75' TRAVEL DISTANCE.
6. COMBUSTIBLE MATERIALS SHALL NOT BE PLACED OR STORED ON BALCONIES PER THE FBC 2017 AND NFPA 101 2014 EDITIONS.
7. EXTERIOR WALLS ARE NOT RATED FOR FIRE SEPARATION THEY ARE RATED FOR STRUCTURE ONLY.
8. SEE A0.02 FOR CODE DATA COMPLYING WITH THE FLORIDA BUILDING CODE 2017 & INTERNATIONAL FIRE PREVENTION CODE (5TH EDITION)
9. ALL STAIRWAYS ARE TO CONFORM BUT NOT BE LIMITED TO NFPA 101 2014 EDITION SECTIONS 7.2.2.5.4 THROUGH 7.2.2.5.5.11.

PERMIT REVIEW STAMP

ISSUE HISTORY

No.	Date	Description
1	02/08/2019	ISSUE FOR PERMIT

REVISION HISTORY

No.	Date	Description

© 2017 These documents and the concepts and designs incorporated therein are the property of FUGLEBERG KOCH (FK) and may not be used by any person or entity without the express written consent of FK. Any unauthorized use, modification, or reproduction of these documents will be prosecuted to the maximum extent possible under the law.

FUGLEBERG KOCH
2555 Temple Trail, Winter Park, FL 32789 (407) 629-0595
www.fuglebergkoch.com AA26002103
CONSULTANT

MICHAEL E. GOVE
FLORIDA LICENSE # AR94111
STATE OF FLORIDA — MICHAEL E. GOVE — AR94111 — REGISTERED ARCHITECT
2/6/2019

SUMMER BAY APTS. II
LAKE COUNTY, FL

Drawn:	Author
Checked:	Checker
Approved:	Approver
Date:	Issue Date
Project #:	5389

LIFE SAFETY PLANS - BUILDING TYPE 2

A0.12

PLOTTED: 2/11/2019 2:27:27 PM

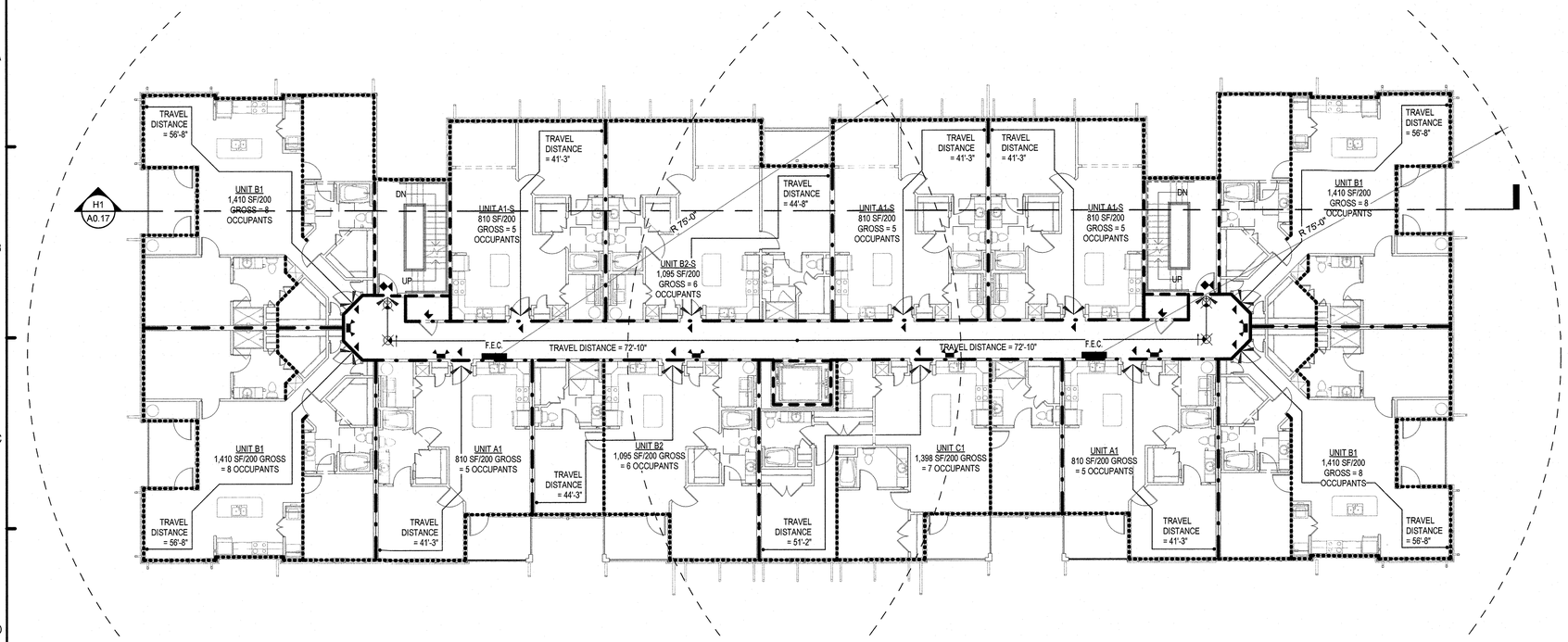

D1 BUILDING TYPE 2 - LEVEL 4 LIFE SAFETY PLAN

3/32" = 1'-0"

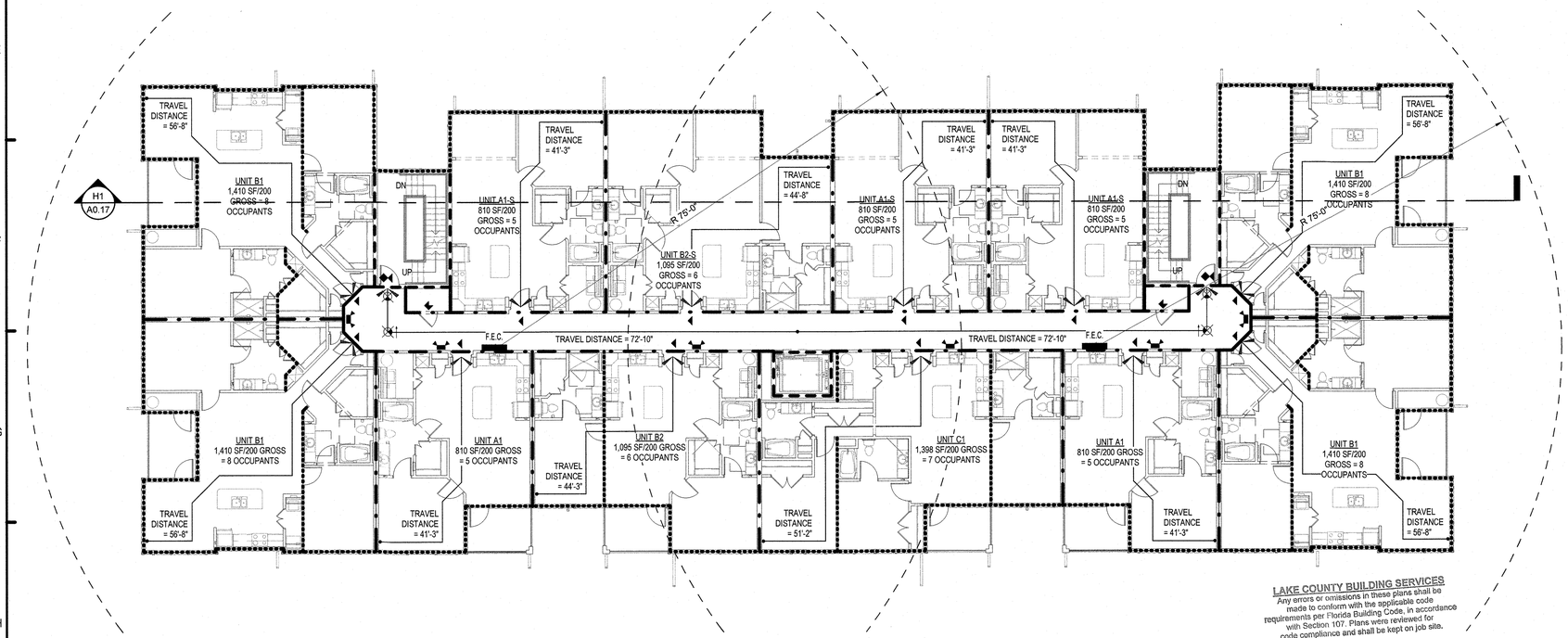

H1 BUILDING TYPE 2 - LEVEL 3 LIFE SAFETY PLAN

3/32" = 1'-0"

LAKE COUNTY BUILDING SERVICES
Any errors or omissions in these plans shall be made to conform with the applicable code requirements per Florida Building Code, in accordance with Section 107. Plans were reviewed for code compliance and shall be kept on job site.

RECEIVED FEB 14 2019

LIFE SAFETY LEGEND

((XXX)) OCCUPANT LOAD

NOTES:
1. ALL UNIT DOOR CAPACITY - 180 PERSONS
2. ALL EXIT DOOR COMMON AREA CAPACITY - 180 PERSONS
   EXCEPTION:GROUND FLOOR ENTRY LOBBY DOORS - 360 PERSONS
3. 36" WIDE ACCESSIBLE ROUTE REQUIRED PER FAIR HOUSING.
4. ALL DOORS ON ACCESSIBLE ROUTE TO HAVE A MINIMUM CLEARANCE OF 2'-8" (32").

- EMERGENCY LIGHT
- TRAVEL DISTANCE TO EXIT
- F.E.C. — FIRE EXTINGUISHER VERIFY EXACT LOCATIONS AND TYPES WITH LOCAL FIRE OFFICIALS
- 20 MIN DOOR
- 45 MIN DOOR
- 60 MIN DOOR
- 90 MIN DOOR
- XXX/XXX = XXX — OCCUPANCY SYMBOL / CAPACITY / SQUARE FEET PER PERSON / GROSS AREA (SQUARE FEET)
- 36" ACCESSIBLE ROUTE
- INDICATES STRUCTURAL SHEAR WALL IN ADDITION TO FIRE RATING, SEE STRUCTURAL FOUNDATION PLAN AND FRAMING PLANS FOR SHEAR WALL TYPE AND STRUCTURAL SHEAR WALL SCHEDULE FOR REQUIRED MINIMUM SHEATHING
- REQUIRED 1 HOUR FIRE SEPARATION
- REQUIRED 2 HOUR FIRE SEPARATION
- REQUIRED 1 HOUR FIRE RATED BEARING WALL

PER SECTION FBC 718.2.2
PROVIDE FIREBLOCKING AT INTERVALS NOT EXCEEDING 10'-0"

TOTAL OCCUPANT LOAD PER LEVEL
LEVEL 3: 76 OCCUPANTS
LEVEL 4: 76 OCCUPANTS

AREA SCHEDULE - UNIT A1								
NAME	AREA	BEDROOMS	BATHS	OCCUPANTS	LEVEL 1 - # UNITS	LEVEL 2 - # UNITS	LEVEL 3 - # UNITS	LEVEL 4 - # UNITS
UNIT A1	732 SF	1	1		2	2	2	2
BALCONY	78 SF							
TOTAL	810 SF	1	1	5	8			

AREA SCHEDULE - UNIT A1-S								
NAME	AREA	BEDROOMS	BATHS	OCCUPANTS	LEVEL 1 - # UNITS	LEVEL 2 - # UNITS	LEVEL 3 - # UNITS	LEVEL 4 - # UNITS
UNIT A1-S	810 SF	1	1		--	3	3	3
BALCONY	--							
TOTAL	810 SF	1	1	5	9			

AREA SCHEDULE - UNIT B1								
NAME	AREA	BEDROOMS	BATHS	OCCUPANTS	LEVEL 1 - # UNITS	LEVEL 2 - # UNITS	LEVEL 3 - # UNITS	LEVEL 4 - # UNITS
UNIT B1	1,295 SF	2	2		4	4	4	4
BALCONY	91 SF							
TOTAL	1,386 SF	2	2	8	16			

AREA SCHEDULE - UNIT B2								
NAME	AREA	BEDROOMS	BATHS	OCCUPANTS	LEVEL 1 - # UNITS	LEVEL 2 - # UNITS	LEVEL 3 - # UNITS	LEVEL 4 - # UNITS
UNIT B2	1,017 SF	2	2		1	1	1	1
BALCONY	78 SF							
TOTAL	1,095 SF	2	2	6	4			

AREA SCHEDULE - UNIT B2-S								
NAME	AREA	BEDROOMS	BATHS	OCCUPANTS	LEVEL 1 - # UNITS	LEVEL 2 - # UNITS	LEVEL 3 - # UNITS	LEVEL 4 - # UNITS
UNIT B2-S	1,095 SF	2	2		--	1	1	1
BALCONY	--							
TOTAL	1,095 SF	2	2	6	3			

AREA SCHEDULE - UNIT C1								
NAME	AREA	BEDROOMS	BATHS	OCCUPANTS	LEVEL 1 - # UNITS	LEVEL 2 - # UNITS	LEVEL 3 - # UNITS	LEVEL 4 - # UNITS
UNIT C1	1,320 SF	3	3		1	1	1	1
BALCONY	78 SF							
TOTAL	1,398 SF	3	3	7	4			

LIFE SAFETY NOTES:

1. SEE SHEET A0.30 THRU A0.37 FOR ALL U.L. ASSEMBLY DESIGN DESCRIPTIONS.
2. SEE SHEET A0.20 FOR ASSEMBLY SOUND RATINGS.
3. PROVIDE RECESSED PORTABLE FIRE EXTINGUISHERS AS REQUIRED BY NFPA 10 STANDARDS FOR PORTABLE FIRE EXTINGUISHERS' 2014 EDITION. VERIFY EXACT LOCATION AND F.E. TYPE WITH FIRE OFFICIAL.
4. PROVIDE ONE 2-A: 10-B:C lb FIRE EXTINGUISHER PER UNIT. COORDINATE ACTUAL TYPE AND LOCATION PER FIRE DEPARTMENT REQUIREMENTS.
5. FIRE EXTINGUISHERS IN PUBLIC SPACES SHALL BE LOCATED WITHIN 75' TRAVEL DISTANCE.
6. COMBUSTIBLE MATERIALS SHALL NOT BE PLACED OR STORED ON BALCONIES PER THE FBC 2017 AND NFPA 101 2014 EDITIONS.
7. EXTERIOR WALLS ARE NOT RATED FOR FIRE SEPARATION THEY ARE RATED FOR STRUCTURE ONLY.
8. SEE A0.02 FOR CODE DATA COMPLYING WITH THE FLORIDA BUILDING CODE 2017 & INTERNATIONAL FIRE PREVENTION CODE (5TH EDITION)
9. ALL STAIRWAYS ARE TO CONFORM BUT NOT BE LIMITED TO NFPA 101 2014 EDITION SECTIONS 7.2.2.5.4 THROUGH 7.2.2.5.5.11.

PERMIT REVIEW STAMP

ISSUE HISTORY

No.	Date	Description
1	02/08/2019	ISSUE FOR PERMIT

REVISION HISTORY

No.	Date	Description

© 2017 These documents are the property of FUGLEBERG KOCH Architects, P.A. and are not to be used in any way without the express written consent of Fugleberg Koch, P.A. Unauthorized use of these documents will be prosecuted to the fullest extent of the law.

FUGLEBERG KOCH
2555 Temple Trail, Winter Park, FL 32789 (407) 629-0595
www.fuglebergkoch.com AA26002103
CONSULTANT

MICHAEL E. GOVE
LICENSE NUMBER AR94111
STATE OF FLORIDA
MICHAEL E. GOVE
AR94111
REGISTERED ARCHITECT

SUMMER BAY APTS. II
LAKE COUNTY, FL

Drawn:	Author
Checked:	Checker
Approved:	Approver
Date:	Issue Date
Project #:	5389

LIFE SAFETY PLANS - BUILDING TYPE 2

A0.13

PLOTTED: 2/11/2019 2:27:52 PM

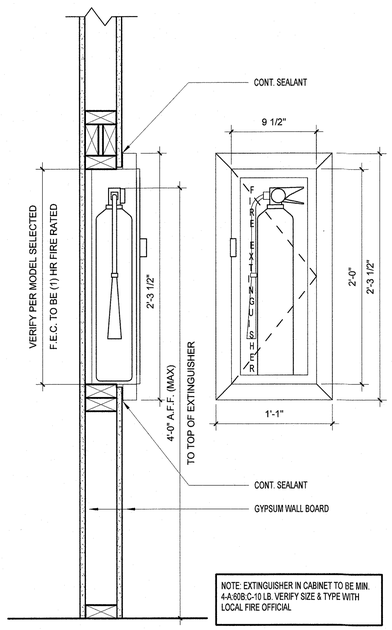

NOTE: EXTINGUISHER IN CABINET TO BE MIN. 4-A:60B:C-10 LB. VERIFY SIZE & TYPE WITH LOCAL FIRE OFFICIAL

D1 SEMI RECESSED FIRE EXTINGUISHER CABINET
1 1/2" = 1'-0"

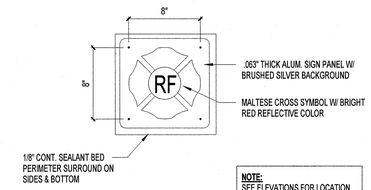

NOTE:
SEE ELEVATIONS FOR LOCATION IN BUILDINGS

D3 FIRE SIGN DETAIL
1 1/2" = 1'-0"

LIFE SAFETY LEGEND

((XXX)) OCCUPANT LOAD

NOTES:
1. ALL UNIT DOOR CAPACITY - 180 PERSONS
2. 2. ALL EXIT DOOR COMMON AREA CAPACITY - 180 PERSONS
   EXCEPTION:GROUND FLOOR ENTRY LOBBY DOORS - 360 PERSONS
3. 36" WIDE ACCESSIBLE ROUTE REQUIRED PER FAIR HOUSING.
4. ALL DOORS ON ACCESSIBLE ROUTE TO HAVE A MINIMUM CLEARANCE OF 2'-8" (32").

EMERGENCY LIGHT

TRAVEL DISTANCE TO EXIT

F.E.C. FIRE EXTINGUISHER
VERIFY EXACT LOCATIONS AND TYPES WITH LOCAL FIRE OFFICIALS

20 MIN DOOR

45 MIN DOOR

60 MIN DOOR

90 MIN DOOR

XXX/XXX = XXX
- OCCUPANCY SYMBOL
- CAPACITY
- SQUARE FEET PER PERSON
- GROSS AREA (SQUARE FEET)

36" ACCESSIBLE ROUTE

REQUIRED 1 HOUR FIRE SEPARATION

REQUIRED 2 HOUR FIRE SEPARATION

PER SECTION FBC 718.2.2
PROVIDE FIREBLOCKING AT INTERVALS
NOT EXCEEDING 10'-0"

LIFE SAFETY NOTES:

1. SEE SHEET A0.30 THRU A0.36 FOR ALL U.L. ASSEMBLY DESIGN DESCRIPTIONS.
2. SEE SHEET A0.20 FOR ASSEMBLY SOUND RATINGS
3. PROVIDE RECESSED PORTABLE FIRE EXTINGUISHERS AS REQUIRED BY NFPA 10 STANDARDS FOR PORTABLE FIRE EXTINGUISHERS' 2014 EDITION. VERIFY EXACT LOCATION AND F.E. TYPE WITH FIRE OFFICIAL.
4. PROVIDE ONE 2-A: 10-B:C lb FIRE EXTINGUISHER PER UNIT. COORDINATE ACTUAL TYPE AND LOCATION PER FIRE DEPARTMENT REQUIREMENTS.
5. FIRE EXTINGUISHERS IN PUBLIC SPACES SHALL BE LOCATED WITHIN 75' TRAVEL DISTANCE.
6. COMBUSTIBLE MATERIALS SHALL NOT BE PLACED OR STORED ON BALCONIES PER THE FBC (5TH EDITION) AND NFPA 101 2014 EDITIONS.
7. EXTERIOR WALLS ARE NOT RATED FOR FIRE SEPARATION THEY ARE RATED FOR STRUCTURE ONLY.
8. SEE A0.02 FOR CODE DATA COMPLYING WITH THE FBC BUILDING CODE (5TH EDITION) BUILDING & INTERNATIONAL FIRE PREVENTION CODE (5TH EDITION)
9. ALL STAIRWAYS ARE TO CONFORM BUT NOT BE LIMITED TO NFPA 101 2014 EDITION SECTIONS 7.2.2.5.4 THROUGH 7.2.2.5.5.11.
10. ALL EXTERIOR & INTERIOR CONCRETE AND MASONRY BEARING WALLS SHALL HAVE (2) HR FIRE RATED RESISTANCE.

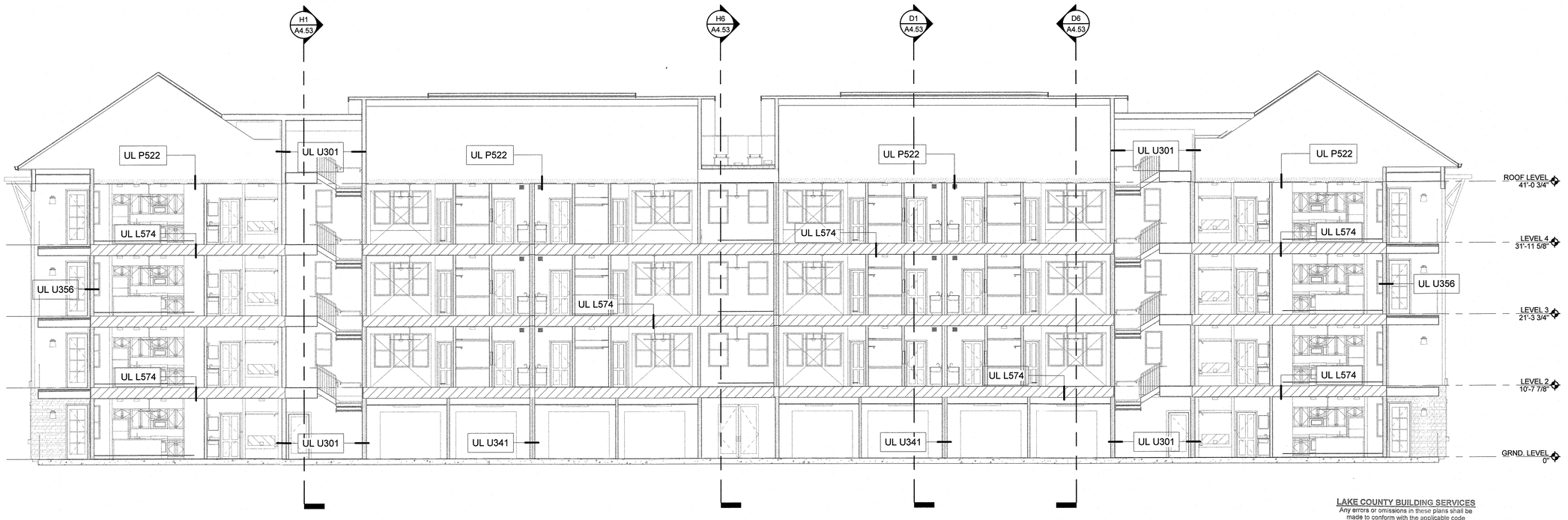

H1 BUILDING TYPE 2 - LS SECTION 1
1/8" = 1'-0"

LAKE COUNTY BUILDING SERVICES
Any errors or omissions in these plans shall be made to conform with the applicable code requirements per Florida Building Code, in accordance with Section 107. Plans were reviewed for code compliance and shall be kept on job site.

RECEIVED FEB 14 2019

PERMIT REVIEW STAMP

ISSUE HISTORY

No.	Date	Description
1	02/08/2019	ISSUE FOR PERMIT

REVISION HISTORY

No.	Date	Description

© 2017 These documents and their contents are the property of FUGLEBERG KOCH ARCHITECTS, and are issued only for the specific project listed on these drawings. Any reproductions, revisions, or modifications of these documents without the expressed written consent of Fugleberg Koch, is prohibited by law.

FUGLEBERG KOCH
2555 Temple Trail, Winter Park, FL 32789 (407) 629-0595
www.fuglebergkoch.com AA26002103
CONSULTANT

MICHAEL E. GOVE
LICENSED ARCHITECT
STATE OF FLORIDA
MICHAEL E. GOVE
AR94111
REGISTERED ARCHITECT
02/08/19

Drawn:	Author
Checked:	Checker
Approved:	Approver
Date:	Issue Date
Project #:	5389

SUMMER BAY APTS. II
LAKE COUNTY, FL

LIFE SAFETY PLANS SECTIONS - BLDG. TYPE 2

A0.17

PLOTTED: 2/11/2019 2:28:07 PM

W6R-c-l | STC: -- | RATING: 1-HR | UL DESIGN: U356

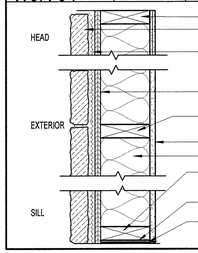

W6 j-j | STC: NR | RATING: NR | UL DESIGN: NR

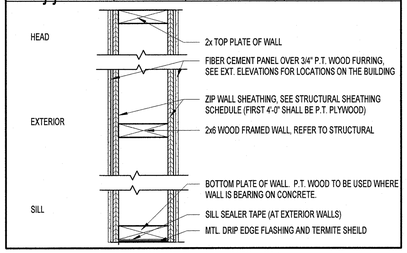

W4 b-c | STC: NR | RATING: NR | UL DESIGN: N/A

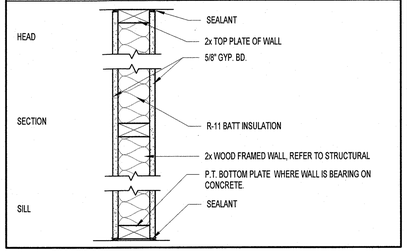

W4 b-b | STC: NR | RATING: NR | UL DESIGN: N/A

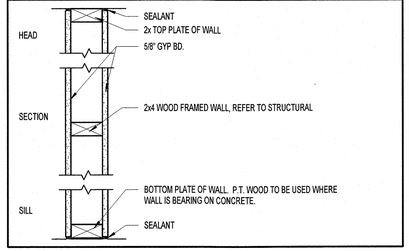

W4R b-b | STC: 50 | RATING: 1 HR | UL DESIGN: U305

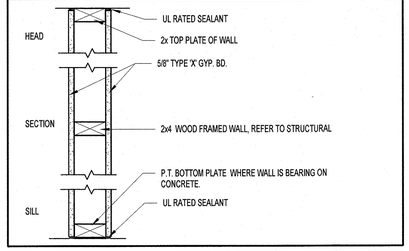

W6R l-e | STC: -- | RATING: 1-HR | UL DESIGN: U356

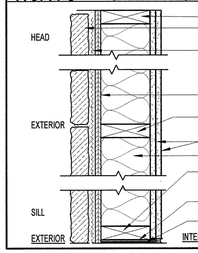

W6 b-m | STC: NR | RATING: NR | UL DESIGN: N/A

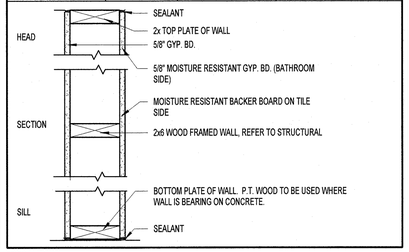

2W4R a-c | STC: 50 | RATING: 1 HR | UL DESIGN: U341

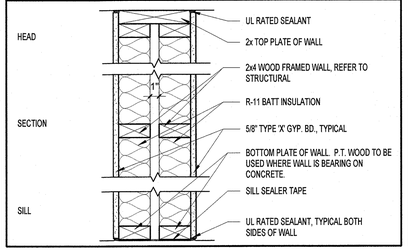

W4R g-b | STC: NR | RATING:1 HR | UL DESIGN: U331

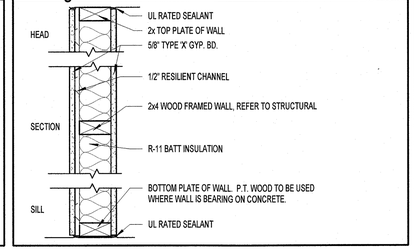

W6 a-j | STC: NR | RATING: NR | UL DESIGN: NR

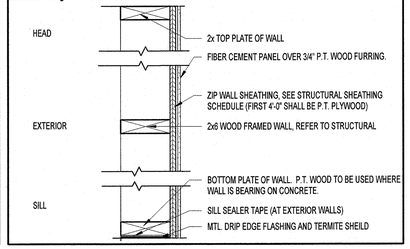

W6R c-h | STC: NR | RATING: 1-HR | UL DESIGN: U356

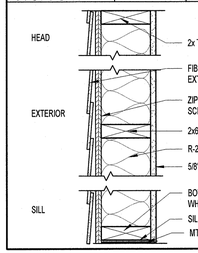

W6R g-b | STC: NR | RATING:1 HR | UL DESIGN: U331

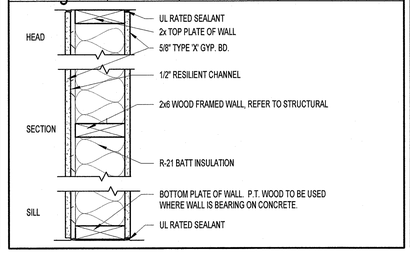

W4 a-b | STC: NR | RATING: NR | UL DESIGN: N/A

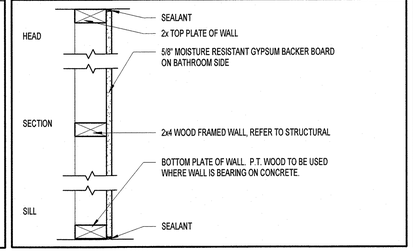

W4R g-m | STC: NR | RATING:1 HR | UL DESIGN: U331

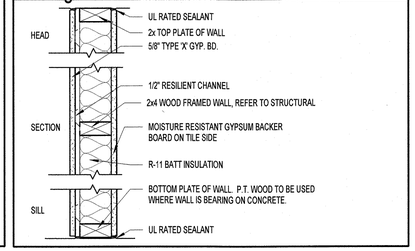

W6R c-e | STC: NR | RATING: 1-HR | UL DESIGN: U356

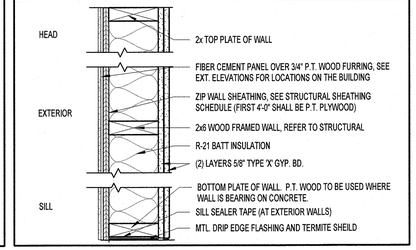

W6R e-h | STC: NR | RATING: 1-HR | UL DESIGN: U356

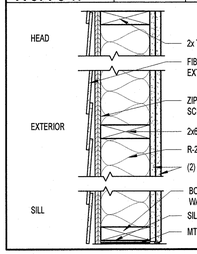

W6R2 d-e | STC: 58 | RATING: 2 HR | UL DESIGN: U301

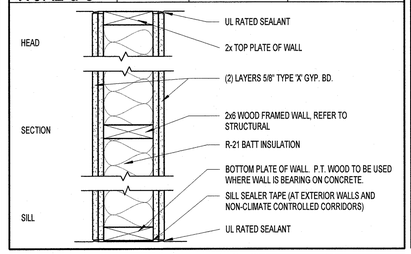

W4 a-m | STC: NR | RATING: NR | UL DESIGN: N/A

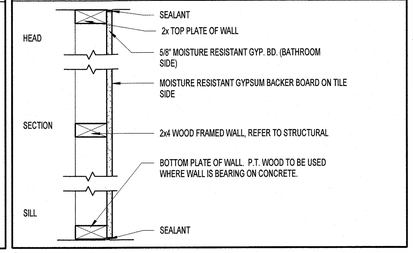

W4R b-c | STC: 50 | RATING: 1 HR | UL DESIGN: U305

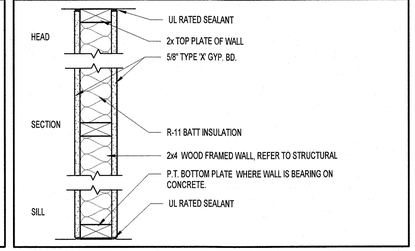

W6 b-c | STC: NR | RATING: NR | UL DESIGN: N/A

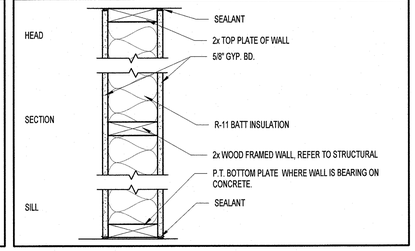

W6R c-j | STC: NR | RATING: 1-HR | UL DESIGN: U356

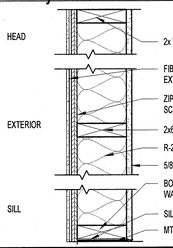

W6R b-c | STC: 50 | RATING: 1 HR | UL DESIGN: U305

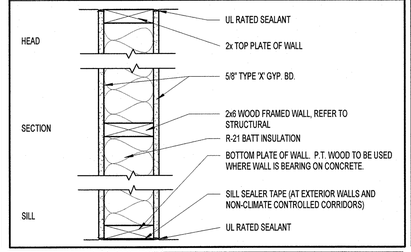

W4 c-m | STC: NR | RATING: NR | UL DESIGN: N/A

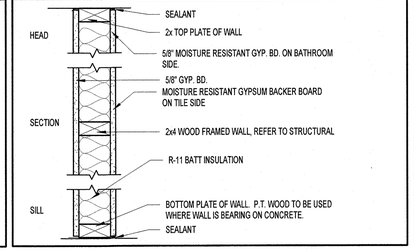

W6 b-b | STC: NR | RATING: NR | UL DESIGN: N/A

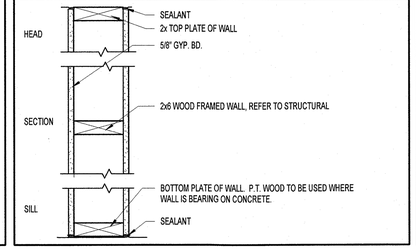

W4 b-m | STC: NR | RATING:1 HR | UL DESIGN: U331

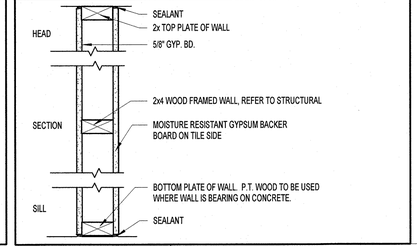

W6R2 b-d | STC: 55 | RATING: 2 HR | UL DESIGN: U375

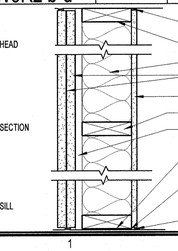

M8-a-a | STC: N/A | RATING: N/A | UL DESIGN: N/A

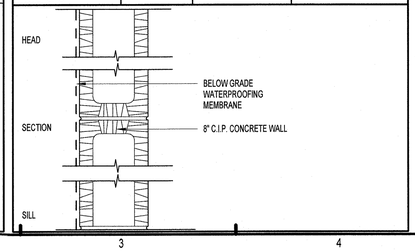

PROVIDE (1) LAYER OSB UNDER DRYWALL OR ADDITIONAL LAYER OF DRYWALL WHERE REQUIRED AT SHEAR WALL LOCATIONS - SEE FRAMING PLAN AND SHEAR WALL SCHEDULE IN STRUCTURAL SET FOR LOCATIONS.

LAKE COUNTY BUILDING SERVICES
Any errors or omissions in these plans shall be made to conform with the applicable code requirements per Florida Building Code, in accordance with Section 107. Plans were reviewed for code compliance and shall be kept on job site.

RECEIVED FEB 14 2019

MODIFIERS
- a. UNFINISHED
- b. (1) LAYER SHEATHING
- c. (1) LAYER SHEATHING & INSULATION
- d. (2) LAYERS SHEATHING
- e. (2) LAYERS SHEATHING & INSULATION
- f. (1) LAYER SHEATHING WITH FURRING
- g. (1) LAYER SHEATHING WITH FURRING & INSULATION
- h. FIBER CEMENT LAP SIDING, BUILDING WRAP, SHEATHING
- i FIBER CEMENT LAP SIDING, BUILDING WRAP, (2) LAYERS SHEATHING
- j FIBER CEMENT PANEL, PLASTIC SHIMS, BUILDING WRAP, SHEATHING
- k. STONE VENEER
- l. STONE VENEER, LATH, BUILDING PAPER, BUILDING WRAP, SHEATHING
- m. (1) LAYER M.R. / CEMENTITIOUS SHEATHING
- n. (1) LAYER M.R. / CEMENTITIOUS SHEATHING & INSULATION
- o. (2) LAYERS M.R. / CEMENTITIOUS SHEATHING
- p. (2) LAYERS M.R. / CEMENTITIOUS SHEATHING & INSULATION
- q. (1) LAYER M.R. / CEMENTITIOUS SHEATHING WITH FURRING
- r. (1) LAYER M.R. / CEMENTITIOUS SHEATHING WITH FURRING & INSULATION
- s. SKIM COAT FINISH
- t. BRICK VENEER, AIRSPACE, BUILDING PAPER, BUILDING WRAP, SHEATHING
- u. MASONRY
- v. (1) LAYER M.R. SHEATHING

PARTITION LEGEND:

CONCRETE
- C8 = 8" CONCRETE
- C6 = 6" CONCRETE
- C5 = 5" CONCRETE
- C4 = 4" CONCRETE

EXISTING PARTITION
- E = EXISTING PARTITION. USE MODIFIER FOR FURRING OVER EXISTING WALL

FURRING
- F2 = 1-1/2" FURRING
- F4 = 3-1/2" FURRING
- F6 = 5-1/2" FURRING

MASONRY
- M12 = 12" CMU
- M10 = 10" CMU
- M8 = 8" CMU
- M4 = 4" CMU

PATCHING OR INFILL
- P = PATCHING OF WALL (OR INFILL) TO MATCH ADJACENT CONSTRUCTION IN EXISTING WALL

SHAFT WALL
- H4 = 4" C-H STUDS
- H2 = 2-1/2" C-H STUDS

STEEL STUD
- S6 = 6" METAL STUDS
- S4 = 3-5/8" METAL STUDS
- S2 = 2-1/2" METAL STUDS
- S1 = 1-5/8" METAL STUDS

WOOD STUD
- W6 = 1-1/2" X 7-1/4" WOOD STUDS
- W6 = 1-1/2" X 5-1/2" WOOD STUDS
- W4 = 1-1/2" X 3-1/2" WOOD STUDS

OTHER
- R = INDICATES 1HR RATED ASSEMBLY
- R2 = INDICATES 2HR RATED ASSEMBLY

PERMIT REVIEW STAMP

ISSUE HISTORY

No.	Date	Description
1	02/08/2019	ISSUE FOR PERMIT

REVISION HISTORY

No.	Date	Description

© 2017 These documents and the contents are the property of FUGLEBERG KOCH ARCHITECTS, and are issued only for the specific project listed on these drawings. Any reproductions, revisions, or modifications of these documents without the expressed written consent of Fugleberg Koch is prohibited by law.

FUGLEBERG KOCH
2555 Temple Trail, Winter Park, FL 32789 (407) 629-0595
www.fuglebergkoch.com AA26002103
CONSULTANT

MICHAEL E. GOTAS — STATE OF FLORIDA — REGISTERED ARCHITECT — AR94111 — 02/08/2019

SUMMER BAY APTS. II
LAKE COUNTY, FL

Drawn:	Author
Checked:	Checker
Approval:	Approver
Date:	Issue Date
Project #:	5389

PARTITION TYPES

A0.20

PLOTTED: 2/11/2019 2:28:12 PM

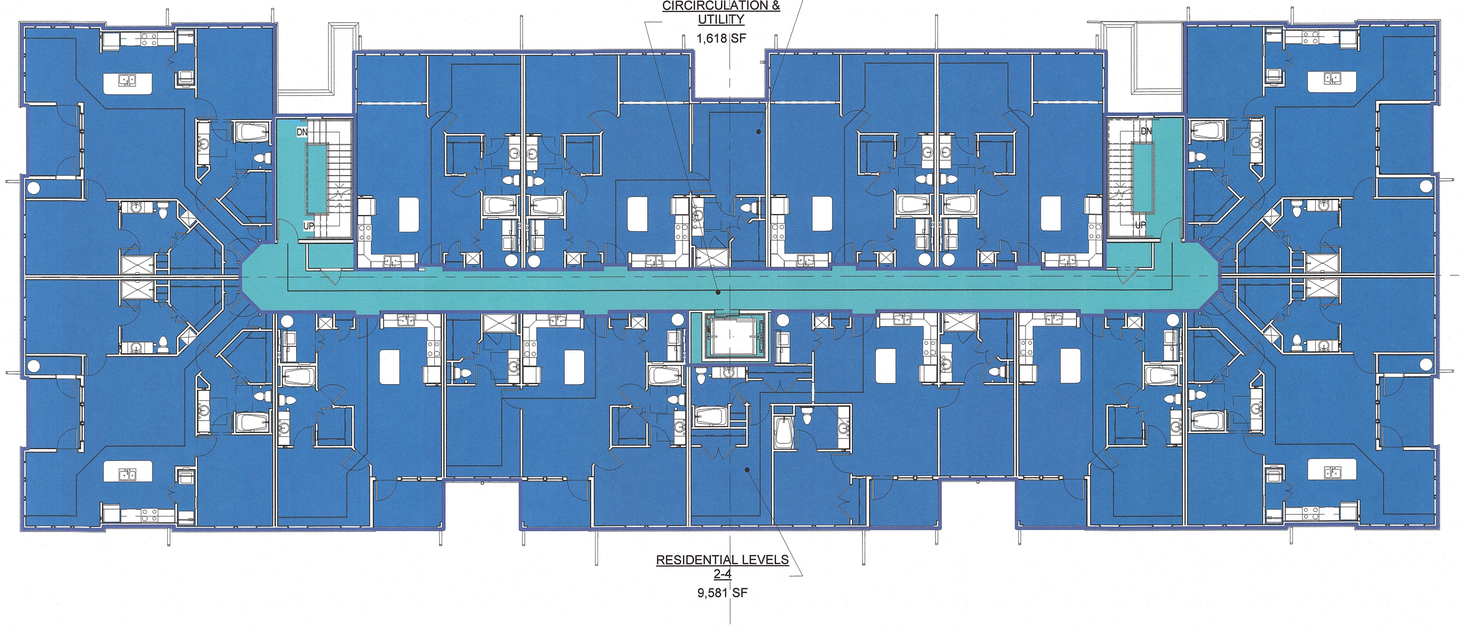

1 BUILDING TYPE 2 - LEVEL 2
3/32" = 1'-0"

Building Area Legend

- CIRCIRCULATION & UTILITY
- RESIDENTIAL LEVELS 2-4

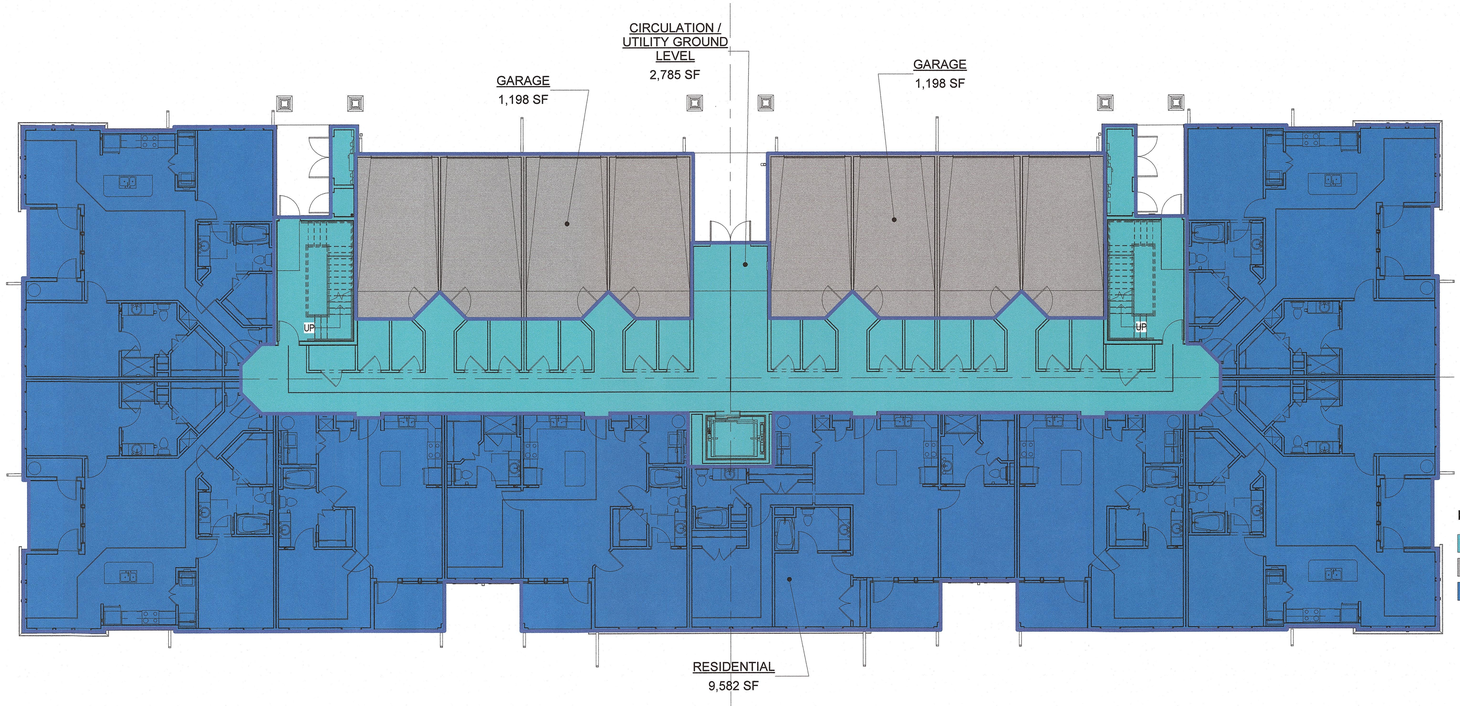

H1 BT2 - GROUND LEVEL - AREA PLAN
3/32" = 1'-0"

Building Area Legend

- CIRCULATION / UTILITY GROUND LEVEL
- GARAGE
- RESIDENTIAL

LAKE COUNTY BUILDING SERVICES
Any errors or omissions in these plans shall be made to conform with the applicable code requirements per Florida Building Code, in accordance with Section 107. Plans were reviewed for code compliance and shall be kept on job site.

RECEIVED FEB 14 2019

PERMIT REVIEW STAMP

ISSUE HISTORY

No.	Date	Description
1	02/08/2019	ISSUE FOR PERMIT

REVISION HISTORY

No.	Date	Description

© 2017 These documents and their contents are the property of FUGLEBERG KOCH, AA26002103, and are issued only for the specific project noted on these drawings. Any reproductions, revisions, or modifications of these documents without the expressed written consent of Fugleberg Koch, is prohibited by law.

FUGLEBERG KOCH
2555 Temple Trail, Winter Park, FL 32789 (407) 629-0595
www.fuglebergkoch.com AA26002103
CONSULTANT

MICHAEL E. GOVE
LICENSE NUMBER AR94111
STATE OF FLORIDA
MICHAEL E. GOVE
AR94111
REGISTERED ARCHITECT
02/08/2019

SUMMER BAY APTS. II
LAKE COUNTY, FL

Drawn:	Author
Checked:	Checker
Approval:	Approver
Date:	Issue Date
Project #:	5389

AREA PLANS - BUILDING TYPE 2

A0.22

PLOTTED: 2/11/2019 2:28:38 PM

Design No. U305

February 04, 2015

Bearing Wall Rating — 1 Hr

Finish Rating — See Items 3, 3A, 3D, 3E, 3F, 3G, 3H, 3J and 3L.
STC Rating - 56 (See Item 9)

This design was evaluated using a load design method other than the Limit States Design Method (e.g., Working Stress Design Method). For jurisdictions employing the Limit States Design Method, such as Canada, a load restriction factor shall be used — See Guide BXUV or BXUV7

*** Indicates such products shall bear the UL or cUL Certification Mark for jurisdictions employing the UL or cUL Certification (such as Canada), respectively.**

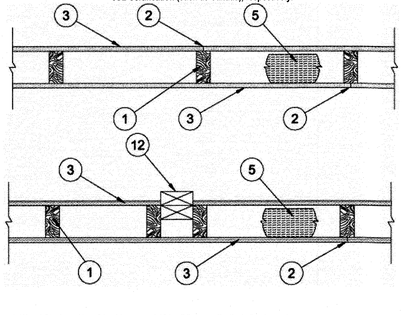

1. **Wood Studs —** Nom 2 by 4 in. spaced 16 in. OC max, effectively firststopped.
2. **Joints and Nail-Heads —** Joints covered with joint compound and paper tape. Joint compound and paper tape may be omitted when square edge boards are used. As an alternate, nom 3/32 in. thick gypsum veneer plaster may be applied to the entire surface of Classified veneer baseboard with the joints reinforced with paper tape. Nailheads exposed or covered with joint compound.
3. **Gypsum Board* —** 5/8 in. thick paper or vinyl surfaced, with beveled, square, or tapered edges, applied either horizontally or vertically. Gypsum panels nailed 7 in. OC with 6d cement coated nails 1-7/8 in. long, 0.0915 in. shank diam and 15/64 in. diam heads. When used in widths other than 48 in., gypsum panels are to be installed horizontally. For an alternate method of attachment of gypsum panels, refer to Item 6, 6A or 6B.
Steel Framing Members*.
When Item 6, 6B, or 6C **Steel Framing Members***, are used, gypsum panels attached to furring channels with 1 in. long Type S bugle-head steel screws spaced 12 in. OC.
When Item 6A, **Steel Framing Members***, is used, two layers of gypsum panels attached to furring channels. Base layer attached to furring channels with 1 in. long Type S bugle-head steel screws spaced 12 in. OC. Face layer attached to furring channels with 1-5/8 in. long Type S bugle-head steel screws spaced 12 in. OC. All joints in face layers staggered with joints in base layers. One layer of gypsum board attached to opposite side of wood stud without furring channels as described in Item 3.
When Item 7, resilient channels are used, 5/8 in. thick, 4 ft wide gypsum panels applied vertically. Screw attached furring channels with 1 in. long, self-drilling, self-tapping Type S or S-12 steel screws spaced 8 in. OC, vertical joints located midway between studs.
ACADIA DRYWALL SUPPLIES LTD — Type X (finish rating 22 min), 5/8 Type X, Moisture Resistant Type X, Gypsum Sheathing Type X, Mold & Mildew Resistant Type X and Mold & Mildew Resistant AR Type X, Type Blueglass Exterior Sheathing
AMERICAN GYPSUM CO — Types AGX-1(finish rating 23 min.), M-Glass (finish rating 23 min.), Type AGX-11 (finish rating 26 min), Type LightRoc (finish rating 22 min) or Type AG-C
BEIJING NEW BUILDING MATERIALS PUBLIC LTD CO — Type DBX-1 (finish rating 24 min).
CERTAINTEED GYPSUM INC — Type 1, Type SF3 (finish rating 20 min) or FRPC, Type C or Type X (finish rating 28 min), Type EGRG or GlasRoc (finish rating 23 min)
CGC INC — Type AR (finish rating 24 min), Type C (finish rating 24 min), Type IP-AR (finish rating 24 min), Type IPC-AR (finish rating 24 min), Type IP-X1 (finish rating 24 min), Type IP-X2 (finish rating 24 min), Type SCX (finish rating 24 min), Type SHX (finish rating 24 min), Type ULX (finish rating 22 min), Type WRC (finish rating 24 min), Type WRX (finish rating 24 min).
CONTINENTAL BUILDING PRODUCTS OPERATING CO, L L C — Type LGFC6A (finish rating 34 min), Type LGFC2A, Type LGFC-C/A, Type LGFC-WD, Type LGLLX (finish rating 21 min).
GEORGIA-PACIFIC GYPSUM L L C — Type 5 (finish rating 26 min), Type 6 (finish rating 23 min), Type 9 (finish rating 26 min), Type C (finish rating 26 min), Type DGG (finish rating 20 min), Type GPFS1 (finish rating 20 min), Type GPFS2 (finish rating 20 min), Type GPFS6 (finish rating 26 min), Type DS, Type DAP, Type DD (finish rating 20 min), Type DA, Type DAPC, Type LS (finish rating 23 min), Type X, Veneer Plaster Base - Type X, Water Rated - Type X, Sheathing - Type X, Soffit - Type X, Type LWX (finish rating 22 min), Veneer Plaster Base-Type LWX (finish rating 22 min), Water Rated-Type LWX (finish rating 22 min), Sheathing Type-LWX (finish rating 22 min), Soffit-Type LWX (finish rating 22 min), Type DGLW (finish rating 22 min), Water Rated-Type DGLW (finish rating 22 min), Sheathing Type- DGLW (finish rating 22 min), Soffit-Type DGLW (finish rating 22 min), Type LWX (finish rating 22 min), Type LW2X (finish rating 22 min), Veneer Plaster Base - Type LW2X (finish rating 22 min), Water Rated - Type LW2X (finish rating 22 min), Sheathing - Type LW2X (finish rating 22 min), Soffit - Type LW2X (finish rating 22 min), Type DGL2W (finish rating 22 min), Water Rated - Type DGL2W (finish rating 22 min), Sheathing - Type DGL2W (finish rating 22 min).
NATIONAL GYPSUM CO — Type FSK (finish rating 20 min), Type FSK-G (finish rating 20 min), Type FSW (finish rating 20 min), Type FSW-3 (finish rating 20 min), Type FSW-5 (finish rating 20 min), Type FSW-6 (finish rating 20 min), Type FSW-G (finish rating 20 min), Type FSW-C (finish rating 20 min), Type FSMR-C, Type FSW-6 (finish rating 20 min), Type FSL (finish rating 24 min), Type FSW-8.
PABCO BUILDING PRODUCTS L L C, DBA PABCO GYPSUM — Types C, PG-2 (finish rating 20 min), PG-3 (finish rating 20 min), Types PG-3W, PG-5W (finish rating 20 min), Type PG-4 (finish rating 20 min), Type PG-6 (finish rating 23 min), Types PG-3WS, PG-5WS, PGS-WRS (finish rating 20 min), Types PG-5, PG-9 (finish rating 26 min), PG-11 or Type PG-C.
PANEL REY S A — Type GREX, PRX, Types RHX, MDX, ETX (finish rating 22 min)
SIAM GYPSUM INDUSTRY (SARABURI) CO LTD — Type EX-1 (finish rating 26 min)
THAI GYPSUM PRODUCTS PCL — Type C, Type X (finish rating 28 min)
UNITED STATES GYPSUM CO — Type AR (finish rating 24 min), Type C (finish rating 24 min), Type FRX-G (finish rating 29 min), Type IP-AR (finish rating 24 min), Type IPC-AR (finish rating 24 min), Type IP-X1 (finish rating 24 min), Type IP-X2 (finish rating 24 min), Type SCX (finish rating 24 min), Type SHX (finish rating 24 min), Type SGX (finish rating 24 min), Type ULX (finish rating 22 min), Type WRX (finish rating 24 min), Type WRC (finish rating 24 min), Type ULIX (finish rating 20 min).
USG MEXICO S A DE C V — Type AR (finish rating 24 min), Type C (finish rating 24 min), Type WRX (finish rating 24 min), Type WRC (finish rating 24 min), Type IP-X1 (finish rating 24 min), Type IP-X2 (finish rating 24 min), Type SHX (finish rating 24 min), SCX (finish rating 24 min), Type IP-AR (finish rating 24 min), Type IPC-AR (finish rating 24 min), Type ULX (finish rating 22 min).
3A. **Gypsum Board* —** (As an alternate to Item 3) — 5/8 in. thick gypsum panels, with beveled, square, or tapered edges, applied either horizontally or vertically. Gypsum panels fastened to framing with 1-1/4 in. long Type W coarse thread gypsum panel steel screws spaced a max 8 in. OC, with last screw 1 in. from edge of board. When used in widths of other than 48 in., gypsum boards are to be installed horizontally.
AMERICAN GYPSUM CO — Types AGX-1 (finish rating 25 min.), M-Glass (finish rating 25 min.), Type AG-C (finish rating 25 min.).
CERTAINTEED GYPSUM INC — Type C or Type X (finish rating 26 min).
CGC INC — Type AR (finish rating 24 min), Type C (finish rating 24 min), Type IP-AR (finish rating 24 min), Type IPC-AR (finish rating 24 min), Type IP-X1 (finish rating 24 min), Type IP-X2 (finish rating 24 min), Type SCX (finish rating 24 min), Type SHX (finish rating 24 min), Type WRC (finish rating 24 min), Type WRX (finish rating 24 min).
UNITED STATES GYPSUM CO — Type AR (finish rating 24 min), Type SCX (finish rating 24 min), Type SGX (finish rating 24 min), Type C (finish rating 24 min), Type WRX (finish rating 24 min), Type WRC (finish rating 24 min), Type IP-X1 (finish rating 24 min), Type IP-X2 (finish rating 24 min), Type SHX (finish rating 24 min), Type FRX-G (finish rating 24 min), Type IP-AR (finish rating 24 min), Type IPC-AR (finish rating 24 min).
USG MEXICO S A DE C V — Type AR (finish rating 24 min), Type C (finish rating 24 min), Type WRX (finish rating 24 min), Type WRC (finish rating 24 min), Type IP-X1 (finish rating 24 min), Type IP-X2 (finish rating 24 min), Type SHX (finish rating 24 min), Type SCX, Type IP-AR (finish rating 24 min), Type IPC-AR (finish rating 24 min).

3B. **Gypsum Board* —** (As an alternate to Item 3) — Nom 3/4 in. thick, installed with 1-7/8 in. long cement coated nails as described in Item 3 or 1-3/8 in. long Type W coarse thread gypsum panel steel screws as described in Item 3A.
CGC INC — Types AR, IP-AR.
UNITED STATES GYPSUM CO — Types AR, IP-AR.
USG MEXICO S A DE C V — Types AR, IP-AR.
3C. **Gypsum Board* —** (As an alternate to Items 3, 3A and 3B) — 5/8 in. thick, 2 ft wide, tongue and groove edge, applied horizontally to one side of the assembly. Installed with 1-7/8 in. long cement coated nails as described in Item 3 or 1-1/4 in. long Type W coarse thread gypsum panel steel screws as described in Item 3A. Joint covering (Item 2) not required.
CGC INC — Type SHX.
UNITED STATES GYPSUM CO — Type SHX.
USG MEXICO S A DE C V — Type SHX.
3D. **Gypsum Board* —** (As an alternate to Items 3, 3A, 3B, or 3C — not shown) For Direct Application to Studs Only- Nom 5/8 in. thick lead backed gypsum panels with beveled, square or tapered edges, applied vertically. Vertical joints centered over studs and staggered min 1 stud cavity on opposite sides of studs. Wallboard secured to studs with 1-5/8 in. long Type W coarse thread gypsum panel steel screws spaced 8 in. OC at perimeter and in the field. Lead batten strips required behind vertical joints of lead backed gypsum wallboard and optional at remaining stud locations. Lead batten strips, min 1-1/2 in. wide, max 10 ft long with a max thickness of 0.125 in. placed on the face of studs and attached to the stud with two 1 in. long Type S-12 pan head steel screws, one at the top of the strip and one at the bottom of the strip. Lead discs or tabs may be used in lieu of or in addition to the lead batten strips or optional at other locations. Max 3/4 in. diam by max 0.125 in. thick lead discs compression fitted or adhered over steel screw heads or max 1/2 in. by 1-1/4 in. by max 0.125 in. thick lead tabs placed on gypsum boards underneath screw locations prior to the installation of the screws. Lead batten strips to have a purity of 99.9% meeting the Federal specification QQ-L-201f, Grade "C".
RAY-BAR ENGINEERING CORP — Type RB-LBG (finish rating 24 min).
3E. **Gypsum Board* —** (As an alternate to Items 3, 3A, 3B, 3C, and 3D) — 5/8 in. thick gypsum panels, with square edges, applied either horizontally or vertically. Gypsum panels fastened to framing with 1-1/4 in. long Type W coarse thread gypsum panel steel screws spaced a max 8 in. OC, with last 2 screws 1 and 4 in. from edge of board or nailed 7 in. OC with 6d cement coated nails 1-7/8 in. long, 0.0915 in. shank diam and 15/64 in. diam heads. When used in widths of other than 48 in., gypsum boards are to be installed horizontally.
GEORGIA-PACIFIC GYPSUM L L C — GreenGlass Type X (finish rating 23 min).
3F. **Gypsum Board* —** (As an alternate to Items 3, 3A, 3B, 3C, 3D, and 3E) - 5/8 in. glass-mat faced with square edges, applied either horizontally or vertically. Gypsum panels nailed 7 in. OC around the perimeter and in the field with 6d cement coated nails 1-7/8 in. long, 0.0915 in. shank diam and 15/64 in. diam heads. Nails shall be placed 1 inch and 3 inch from horizontal joints and 7 inch OC thereafter.
UNITED STATES GYPSUM CO — Type USGX (finish rating 22 min.)
3G. **Gypsum Board* —** (As an alternate to Items 3 through 3F) - 5/8 in. thick paper surfaced applied vertically. Gypsum panels nailed 7 in. OC with 6d cement coated nails 1-7/8 in. long, 0.0915 in. shank diam and 15/64 in. diam heads.
GEORGIA-PACIFIC GYPSUM L L C — Type X ComfortGuard Sound Deadening Gypsum Board (finish rating 27 min).
3H. **Gypsum Board* —** (As an alternate to Items 3) - Not to be used with Items 6 or 7. 5/8 in. thick paper surfaced applied vertically only. Gypsum panels nailed 7 in. OC with 6d cement coated nails 1-7/8 in. long, 0.0915 in. shank diam and 15/64 in. diam heads.
NATIONAL GYPSUM CO — SoundBreak XP Type X Gypsum Board
3I. **Gypsum Board *** — (As an alternate to Items 3 through 3H, not shown) — Nominal 5/8 in. thick, 4 ft wide panels, applied vertically. Panels nailed 7 in. OC with 6d cement coated nails 1-7/8 in. long, 0.0915 in. shank diam and 15/64 in. diam heads. Panel joints covered with paper tape and two layers of joint compound. Nailheads covered with two layers of joint compound.
PABCO BUILDING PRODUCTS L L C, DBA PABCO GYPSUM — Type QuietRock ES (finish rating 20 min).
3J. **Gypsum Board* —** (As an alternate to Items 3) - Not to be used with Items 6 or 7. 5/8 in. thick paper surfaced applied vertically only. Gypsum panels nailed 7 in. OC with 6d cement coated nails 1-7/8 in. long, 0.0915 in. shank diam and 15/64 in. diam heads.
CERTAINTEED GYPSUM INC — Type SilentFX
3K. **Gypsum Board* —** (As an alternate to Item 3) - 5/8 in. thick gypsum panels, with beveled, square, or tapered edges, applied either horizontally or vertically. Gypsum panels fastened to framing with 1-1/4 in. long Type W coarse thread gypsum panel steel screws spaced a maximum 8 in. OC with the last screw 1 in. from the edge of the board. When used in widths other than 48 in., gypsum panels are to be installed horizontally.
NATIONAL GYPSUM CO — Type FSK (finish rating 20 min), Type FSK-G (finish rating 20 min), Type FSW (finish rating 20 min), Type FSW-2 (finish rating 24 min), Type FSW-3 (finish rating 20 min), Type FSW-5 (finish rating 22 min), Type FSW-G (finish rating 20 min), Type FSK-C (finish rating 20 min), Type FSW-C (finish rating 20 min), Type FSMR-C, Type FSW-6 (finish rating 20 min).
3L. **Gypsum Board* —** (As an alternate to Item 3) For Direct Application to Studs Only- Nom 5/8 in. thick lead backed gypsum panels with beveled, square or tapered edges, applied vertically. Vertical joints centered over studs and staggered min 1 stud cavity on opposite sides of studs. Wallboard secured to studs with 1-5/8 in. long Type W coarse thread gypsum panel steel screws spaced 8 in. OC at perimeter and in the field. Lead batten strips required behind vertical joints of lead backed gypsum wallboard and optional at remaining stud locations. Lead batten strips, min 2 in. wide, max 10 ft long with a max thickness of 0.140 in. placed on the face of studs and attached to the stud with two 1 in. long Type S-8 pan head steel screws, one at the top of the strip and one at the bottom of the strip. Lead discs, max 5/16 in. diam by max 0.140 in. thick. compression fitted or adhered over the screw heads. Lead batten strips to have a purity of 99.5% meeting the Federal specification QQ-L-201f, Grades "B, C or D".
MAYCO INDUSTRIES INC — "X-Ray Shielded Gypsum"
3M. **Gypsum Board* —** (As an alternate to Items 3) For Direct Application to Studs Only- For use as the base layer or as the face layer. Nom 5/8 in. thick lead backed gypsum panels with beveled, square or tapered edges, applied vertically. Vertical joints centered over studs and staggered min 1 stud cavity on opposite sides of studs. Wallboard secured to studs with 1-5/8 in. long Type W coarse thread gypsum panel steel screws spaced 8 in. OC at perimeter and in the field when applied as the base layer. When applied as the face layer screw length to be increased to 2-1/2 in. Lead batten strips required behind vertical joints of lead backed gypsum wallboard and optional at remaining stud locations. Lead batten strips, min 2 in. wide, max 10 ft long with a max thickness of 0.14 in. placed on the face of studs and attached to the stud with construction adhesive and two 1 in. long Type S-12 pan head steel screws, one at the top of the strip and one at the bottom of the strip. Lead discs, nominal 3/8 in. diam by max 0.085 in. thick. Compression fitted or adhered over the screw heads. Lead batten strips and discs to have a purity of 99.9% meeting the Federal specification QQ-L-2011, Grade "C". Fasteners for face layer gypsum panels (Items 4, 4A or 4B) when installed over lead backed board to be min 2-1/2 in. Type S-12 bugle head steel screws spaced as described in Item 4.
RADIATION PROTECTION PRODUCTS INC — Type RPP - Lead Lined Drywall
3N. **Gypsum Board* —** (As an alternate to Item 3) — 5/8 in. thick, 4 ft. wide, applied vertically with vertical joints centered over studs and staggered one stud cavity on opposite sides of studs. Secured as described in Item 3.
CERTAINTEED GYPSUM INC — 5/8" EasiLite Type X (finish rating 24 min)
3O. **Wall and Partition Facings and Accessories* —** (As an alternate to Item 3, not shown) — Nominal 5/8 in. thick, 4 ft wide panels, applied vertically. Panels nailed 7 in. OC with 6d cement coated nails 1-7/8 in. long, 0.0915 in. shank diam and 15/64 in. diam heads. Panel joints covered with paper tape and two layers of joint compound. Nailheads covered with two layers of joint compound.
PABCO BUILDING PRODUCTS L L C, DBA PABCO GYPSUM — Type QuietRock 527 (finish rating 24 min).
3P. **Gypsum Board* —** (As an alternate to Item 3, not shown) - Two layers nom. 5/16 in. thick gypsum panels applied vertically or horizontally. Horizontal edge joints and horizontal butt joints on opposite sides of studs need not be staggered or backed by wood studs. Horizontal joints on the same sidebetween face and base layers need not be staggered. Base layer gypsum panels fastened to studs with 1-1/4 in. long drywall nails spaced 8 in. OC. Face layer gypsum panels fastened to studs with 1-7/8 in. long drywall nails spaced 8 in. OC starting with a 4" stagger.
NATIONAL GYPSUM CO — Type FSW (finish rating 25 min)
4. **Steel Corner Fasteners — (Optional) —** For use at wall corners. Channel shaped, 2 in. long by 1 in. high on the back side with two 1/8 in. wide cleats protruding into the 5/8 in. wide channel, fabricated from 24 gauge galv steel. Fasteners applied only to the end or cut edge (not along tapered edges) of the gypsum board, no greater than 2 in. from corner of gypsum board, max spacing 16 in. OC. Nailed to adjacent stud through tab using one No. 6d cement coated nail per fastener. Corners of wall board shall be nailed to top and bottom plate using No. 6d cement coated nails.
5. **Batts and Blankets* —** (Optional - Required when Item 6A is used (RC-1)) Glass fiber or mineral wool insulation. Placed to completely or partially fill the stud cavities. When Item 6A is used, glass fiber or mineral wool insulation shall be friction-fitted to completely fill the stud cavities.
CERTAINTEED CORP
KNAUF INSULATION LLC
JOHNS MANVILLE INTERNATIONAL INC
KNAUF INSULATION LLC
MANSON INSULATION INC
OWENS CORNING HT INC, DIV OF OWENS CORNING — Corning Fiberglas Corp.
ROCK WOOL MANUFACTURING CO — Delta Board.
ROXUL INC — Acoustical Fire Batts
THERMAFIBER INC — Type SAFB.
5A. **Fiber, Sprayed* —** (Not shown - Not for use with Item 6) As an alternate to Batts and Blankets (Item 5) — Spray applied cellulose material. The fiber is applied with water to completely fill the enclosed cavity in accordance with the application instructions supplied with the product with a nominal dry density of 2.7 lb/ft3. Alternate Application Method: The fiber is applied without water or adhesive at a nominal dry density of 3.5 lb/ft3, in accordance with the application instructions supplied with the product. When Item 6B is used, Fiber, Sprayed shall be INS735, INS745, INS765LD or INS770LD.
U S GREENFIBER L L C — INS735& INS745 for use with wet or dry application. INS510LD, INS515LD, INS541LD, INS735, INS745, INS765LD, and INS770LD are to be used for dry application only.
5B. **Fiber, Sprayed* —** (Not shown - Not for use with Item 6) As an alternate to Batts and Blankets (Item 5) and Item 5A - Spray applied cellulose insulation material. The fiber is applied with water to interior surfaces in accordance with the application instructions supplied with the product. Applied to completely fill the enclosed cavity. Minimum dry density of 4.3 pounds per cubic ft.
NU-WOOL CO INC — Cellulose Insulation
5C. **Batts and Blankets* —** Required for use with resilient channels, Item 7, 3 in. thick mineral wool batts, friction-fitted to fill interior of wall.
THERMAFIBER INC — Type SAFB
5D. **Glass Fiber Insulation —** (As an alternate to Item 5C) — 3 in. thick glass fiber batts bearing the UL Classification Marking as to Surface Burning and/or Fire Resistance, friction-fitted to fill the interior of the wall. See **Batts and Blankets** (BKNV or BZJZ) Categories for names of Classified companies.

5E. **Batts and Blankets* —** (Required for use with Wall and Partition Facings and Accessories, Item 3D) — Glass fiber insulation, nom 3-1/2 in. thick, min. density of 0.80 pcf, with a flame spread of 25 or less and a smoke developed of 50 or less, friction-fitted to completely fill the stud cavities. See Batts and Blankets Category (BKNV) for names of manufacturers.
5F. **Fiber, Sprayed* —** (Optional, Not Shown - Not for use with Item 6, 6A or 6B). As an alternate to Batts and Blankets (Item 5) and Item 5A - Spray applied granulated mineral fiber material. The fiber is applied with water to completely fill the enclosed cavity in accordance with the application instructions supplied with the product. See **Fiber, Sprayed** (CCAZ).
TEXAS AMERROCK PARTNERS L P, DBA AMERROCK PRODUCTS — Rockwool
5G. **Fiber, Sprayed* —** (Optional, Not Shown - Not for use with Items6, 6A or 6B). As an alternate to Batts and Blankets (Item 5) and Item 5A - Brown Colored Spray applied cellulose fiber. The fiber is applied with water to completely fill the enclosed stud cavity in accordance with the application instructions supplied with the product. The minimum dry density shall be 4.30 lbs/ft3.
INTERNATIONAL CELLULOSE CORP — Celbar-RL
6. Steel Framing Members (Optional, Not Shown)* — Furring channels and Steel Framing Members as described below:
a. Furring Channels — Formed of No. 25 MSG galv steel. 2-9/16 in. or 2-23/32 in. wide by 7/8 in. deep, spaced 24 in. OC perpendicular to studs. Channels secured to studs as described in Item b. Ends of adjoining channels are overlapped 6 in. and tied together with double strand of No. 18 SWG galv steel wire near each end of overlap. As an alternate, ends of adjoining channels may be overlapped 6 in. and secured together with two self-tapping #6 framing screws, min. 7/16 in. long at the midpoint of the overlap, with one screw on each flange of the channel. Gypsum board attached to furring channels as described in Item 3. b. Steel Framing Members* — Used to attach furring channels (Item 6a) to studs. Clips spaced 48 in. OC. RSIC-1 clips secured to studs with No. 8 x 2-1/2 in. coarse drywall screw through the center grommet. RSIC-V clips secured to studs with No. 8 x 1-1/2 in. coarse drywall screw through the center hole. Furring channels are friction fitted into clips.
PAC INTERNATIONAL INC — Types RSIC-1, RSIC-V, RSIC-1 (2.75), RSIC-V (2.75).

6A. Steel Framing Members (Optional, Not Shown)* — Furring channels and Steel Framing Members on one side of studs as described below:
a. Furring Channels — Formed of No. 25 MSG galv steel, spaced 24 in. OC perpendicular to studs. Channels secured to studs as described in Item b. Ends of adjoining channels are overlapped 6 in. and tied together with double strand of No. 18 SWG galv steel wire near each end of overlap. Batts and Blankets placed in stud cavity as described in Item 5. Two layers of gypsum board attached to furring channels as described in Item 3.

b. Steel Framing Members* — used to attach furring channels (Item 6Aa) to one side of studs only. Clips spaced 48 in. OC., and secured to studs with two No. 8 x 2-1/2 in. coarse drywall screws, one through the hole at each end of the clip. Furring channels are friction fitted into clips.
KINETICS NOISE CONTROL INC — Type Isomax.

6B. Steel Framing Members — (Optional, Not Shown)* — Furring channels and Steel Framing Members as described below:
a. Furring Channels — Formed of No. 25 MSG galv steel. 2-3/8 in. wide by 7/8 in. deep, spaced 24 in. OC perpendicular to studs. Channels secured to studs as described in Item b. Ends of adjoining channels are overlapped 6 in. and tied together with double strand of No. 18 SWG galv steel wire near each end of overlap. As an alternate, ends of adjoining channels may be overlapped 6 in. and secured together with two self-tapping #6 framing screws, min. 7/16 in. long at the midpoint of the overlap, with one screw on each flange of the channel. Gypsum board attached to furring channels as described in Item 3.

b. Steel Framing Members* — Used to attach furring channels (Item 6Ba) to studs. Clips spaced 48 in. OC. Genie clips secured to studs with No. 8 x 1-1/2 in. coarse drywall screw through the center hole. Furring channels are friction fitted into clips.
PLITEQ INC — Type Genie Clip

6C. Steel Framing Members — (Optional, Not Shown)* — Furring channels and resilient sound isolation clip as described below:
a. Furring Channels — Formed of No. 25 MSG galv steel. Spaced 24 in. OC perpendicular to studs. Channels secured to studs as described in Item b. Ends of adjoining channels overlapped 6 in. and secured together with four self-tapping No. 8x1/2 Self Drilling screws (2 per side 1 in. and 4 in. from overlap edge). Gypsum board attached to furring channels as described in Item 3. Side joint furring channels shall be attached to studs with RESILMOUNT Sound Isolation Clips located approximately 2 in. from each end of length of channel. Both Gypsum Boards at side joints fastened into channel with screws spaced 8 in. OC, approximately 1/2 in. from joint edge.

b. Steel Framing Members* — Resilient sound isolation clip used to attach furring channels (Item 6Ca) to studs. Clips spaced 16 in. OC., and secured to studs with No. 10 x 2-1/2 in. coarse drywall screw through the center hole. Furring channels are friction fitted into clips.
STUDCO BUILDING SYSTEMS — RESILMOUNT Sound Isolation Clips - Type A237 or A237R

7. Furring Channel — Optional - Not Shown - For use on one side of the wall - Resilient channels, 25 MSG galv steel, spaced vertically 24 in. OC, flange portion screw attached to one side of studs with 1-1/4 in. long diamond shaped point, double lead Phillips head steel screws. When resilient channels are used, insulation, Items 5C or 5D is required.

8. Caulking and Sealants — (not shown, optional) A bead of acoustical sealant applied around the partition perimeter for sound control.

9. STC Rating — The STC Rating of the wall assembly is 56 when it is constructed as described by Items 1 through 6, except:

A. Item 2, above - Nailheads Shall be covered with joint compound.
B. Item 2, above - Joints As described, shall be covered with fiber tape and joint compound.
C. Item 5, above - Batts and Blankets* The cavities formed by the studs shall be friction fit with R-19 unfaced fiberglass insulation batts measuring 6-1/4 in. thick and 15-1/4 in. wide.
D. Item 6, above - Steel Framing Members* Type RSIC-1 clips shall be used to attach gypsum board to studs on either side of the wall assembly.
E. Item 8, above - Caulking and Sealants (not shown) A bead of acoustical sealant shall be applied around the partition perimeter for sound control.
F. Steel Corner Fasteners (Item 4), Fiber, Sprayed (Items 5A and 5B) and Steel Framing Members (Item 6A), not evaluated as alternatives for obtaining STC rating.

10. Wall and Partition Facings and Accessories* — (Optional, Not shown) — Nominal 1/2 in. thick, 4 ft wide panels, for optional use as an additional layer on one or both sides of the assembly. Panels attached in accordance with manufacturer's recommendations. When the QR-510 panel is installed between the wood framing and the UL Classified gypsum board, the required UL Classified gypsum board layer(s) is/are to be installed as indicated as to fastener type and spacing, except that the required fastener length shall be increased by a minimum of 1/2 in. Not evaluated or intended as a substitute for the required layer(s) of UL Classified Gypsum Board.
PABCO BUILDING PRODUCTS L L C, DBA PABCO GYPSUM — Type QuietRock 510.

11. Cementitious Backer Units* — (Optional Item Not Shown - For Use On Face Of 1 Hr Systems With All Standard Items Required) - 7/16 in., 1/2 in., 5/8 in., 3/4 in. or 1 in. thick, min. 32 in. wide.- Applied vertically or horizontally with vertical joints centered over studs. Fastened to studs and runners with cement board screws of adequate length to penetrate stud by a minimum of 3/8 in. for steel framing members, and a minimum of 3/4 in. for wood framing members spaced a max of 8 in. OC. When 4 ft. wide boards are used, horizontal joints need not be backed by framing.
NATIONAL GYPSUM CO — Type DuraBacker, PermaBase, DuraBacker Plus, or PermaBase Plus

12. Non-Bearing Wall Partition Intersection — (Optional) —Two nominal 2 by 4 in. studs or nominal 2 by 6 in. studs nailed together with two 3 in. long 10d nails spaced a max. 16 in. OC. vertically and fastened to one side of the minimum 2 by 4 in. stud with 3 in. long 10d nails spaced a max. 16 in. OC. vertically. Intersection between partition wood studs to be flush with the 2 by 4 in. studs. The wall partition wood studs are to be framed by with a second 2 by 4 in. wood stud fastened with 3 in. long 10d nails spaced a max. 16 in. OC. vertically. Maximum one non-bearing wall partition intersection per stud cavity. Non-bearing wall partition stud depth shall be at a minimum equal to the depth of the bearing wall.

13. Mesh Netting — (Not shown) - Any thin, woven or non-woven fibrous netting material attached with staples to the outer face of one row of studs to facilitate the installation of the sprayed fiber from the opposite row.

14. Mineral and Fiber Board* — (Optional, Not shown) — For optional use as an additional layer on one side of wall. Nom 1/2 in. thick, 4 ft wide with long dimension parallel and centered over studs. Attached to framing with 2 in. long Type W steel screws, spaced 12 in. OC. The required UL Classified gypsum board layer(s) is/are to be installed as indicated as to fastener type and spacing, except that the required fastener length shall be increased by a minimum of 1/2 in. Not evaluated or intended as a substitute for the required layer(s) of UL Classified Gypsum Board.
HOMASOTE CO — Homasote Type 440-32

14A. Mineral and Fiber Board* — (Optional, Not shown) — For use with Items 14B-14E) — For optional use as an additional layer on one side of wall. Nom 1/2 in. thick, 4 ft wide with long dimension parallel and centered over studs. Attached to framing with minimum 1-3/8 in. long ring shanked nails or 1-1/4 in. long Type W steel screws, spaced 12 in. OC along board edges and 24 in. OC in field of board along intermediate framing. Not evaluated or intended as a substitute for the required layer(s) of UL Classified Gypsum Board.
HOMASOTE CO — Homasote Type 440-32

14B. Glass Fiber Insulation — (For use with Item 14A) — 3-1/2 in. thick glass fiber batts bearing the UL Classification Marking as to Surface Burning and/or Fire Resistance, placed to fill the interior of the wall. See Batts and Blankets (BKNV or BZJZ) categories for names of Classified companies.

14C. Batts and Blankets* — (As an alternate to Item 14B, For use with Item 14A), 3 in. thick mineral wool batts, placed to fill interior of wall, attached to the 3-1/2 in. face of the studs with staples placed 24 in. OC.
THERMAFIBER INC — Type SAFB

14D. Adhesive — (For use with Item 14A) - Construction grade adhesive applied in vertical, serpentine, nominal 3/8 in. wide beads down the length of both vertical edges of Mineral and Fiber Board (Item 14A).

14E. Gypsum Board* — (For use with Item 14A) - 5/8 in. thick, 4 ft wide, applied vertically over Mineral and Fiber Board (Item 14A) with vertical joints located anywhere over stud cavities. Secured to mineral and fiber boards with 1-1/2 in. Type G Screws spaced 8 in. OC along edges of each vertical joint and 12 in. OC in intermediate field of the Mineral and Fiber Board (Item 14A). Secured to outermost studs and bearing plates with 2 in. long Type S screws spaced 8 in. OC. Gypsum Board joints covered with paper tape and joint compound. Screw heads covered with joint compound. Finish Rating 30 Min.
AMERICAN GYPSUM CO — Type AG-C

CERTAINTEED GYPSUM INC — Type FRPC, Type C
CGC INC — Types C, IP-X2, IPC-AR
CONTINENTAL BUILDING PRODUCTS OPERATING CO, L L C — Type LGFC-C/A
GEORGIA-PACIFIC GYPSUM L L C — Types 5, DAPC, TG-C
NATIONAL GYPSUM CO — Types FSK-C, FSW-C
PABCO BUILDING PRODUCTS L L C, DBA PABCO GYPSUM — Type PG-C.
PANEL REY S A — Type PRC
THAI GYPSUM PRODUCTS PCL — Type C
UNITED STATES GYPSUM CO — Types C, IP-X2, IPC-AR
USG MEXICO S A DE C V — Types C, IP-X2, IPC-AR

* Indicates such products shall bear the UL or cUL Certification Mark for jurisdictions employing the UL or cUL Certification (such as Canada), respectively.

Last Updated on 2015-02-04

Design No. U341

September 23, 2014

Bearing Wall Rating — 1 Hr.

Finish Rating — Min 20 min.

This design was evaluated using a load design method other than the Limit States Design Method (e.g., Working Stress Design Method). For jurisdictions employing the Limit States Design Method, such as Canada, a load restriction factor shall be used — See Guide BXUV or BXUV7

*** Indicates such products shall bear the UL or cUL Certification Mark for jurisdictions employing the UL or cUL Certification (such as Canada), respectively.**

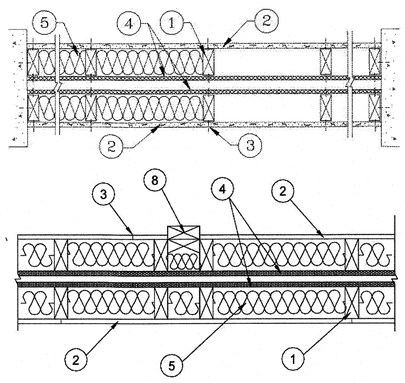

1. Wood Studs — Nom 2 by 4 in., spaced 24 in. OC max. Cross braced at mid-height and effectively firestopped at top and bottom of wall. No min. air space between stud rows except to accommodate attachment of sheathing, where required. See items 4 and 5.

2. Gypsum Board* — Any 5/8 in. thick UL Classified Gypsum Board that is eligible for use in Design Nos. L501, G512 or U305. Nom 5/8 in. thick 4 ft wide. Gypsum board or lath applied horizontally or vertically, unless specified below, and nailed to studs and bearing plates 7 in. OC with 6d cement coated nails, 1-7/8 in. long, 0.0915 in. shank diam and 1/4 in. diam head. As an alternate, No. 6 bugle head drywall screws, 1-7/8 in. long, may be substituted for the 6d cement coated nails.
When Steel Framing Members* (Item 6-6B) are used, wallboard attached to furring channels with 1 in. long Type S bugle-head steel screws spaced 12 in. OC.

When used in widths other than 48 in., gypsum board to be installed horizontally.
ACADIA DRYWALL SUPPLIES LTD (View Classification) — CKNX.R25370
AMERICAN GYPSUM CO (View Classification) — CKNX.R14196
BEIJING NEW BUILDING MATERIALS PUBLIC LTD CO (View Classification) — CKNX.R19374
CERTAINTEED GYPSUM INC (View Classification) — CKNX.R3660
CGC INC (View Classification) — CKNX.R19751
CONTINENTAL BUILDING PRODUCTS OPERATING CO, L L C (View Classification) — CKNX.R18482
GEORGIA-PACIFIC GYPSUM L L C (View Classification) — CKNX.R2717
LOADMASTER SYSTEMS INC (View Classification) — CKNX.R11809
NATIONAL GYPSUM CO (View Classification) — CKNX.R3501
PABCO BUILDING PRODUCTS L L C, DBA PABCO GYPSUM (View Classification) — CKNX.R7094
PANEL REY S A (View Classification) — CKNX.R21796
SIAM GYPSUM INDUSTRY (SARABURI) CO LTD (View Classification) — CKNX.R19262
THAI GYPSUM PRODUCTS PCL (View Classification) — CKNX.R27517
UNITED STATES GYPSUM CO (View Classification) — CKNX.R1319
USG MEXICO S A DE C V (View Classification) — CKNX.R16989

2A. Gypsum Board* — (As an alternate to Item 2, not shown) - Nominal 5/8 in. th

Design No. U301

October 10, 2017

Bearing Wall Rating — 2 Hr.

Finish Rating — 66 Min.

This design was evaluated using a load design method other than the Limit States Design Method (e.g., Working Stress Design Method). For jurisdictions employing the Limit States Design Method, such as Canada, a load restriction factor shall be used — See Guide BXUV or BXUV7

*** Indicates such products shall bear the UL or cUL Certification Mark for jurisdictions employing the UL or cUL Certification (such as Canada), respectively.**

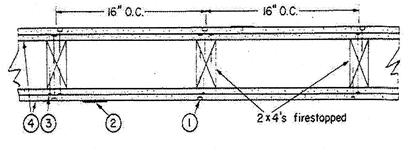

1. **Nailheads —** Exposed or covered with joint compound.

2. **Joints —** Exposed joints covered with joint compound and paper tape. Joint compound and paper tape may be omitted when square edge boards are used. As an alternate, nom 3/32 in. thick gypsum veneer plaster may be applied to the entire surface of Classified veneer baseboard with the joints reinforced with paper tape.

3. **Nails —** 6d cement coated nails 1-7/8 in. long, 0.0915 in. shank diam, 1/4 in. diam heads, and 8d cement coated nails 2-3/8 in. long, 0.113 in. shank diam, 9/32 in. diam heads.

4. **Gypsum Board* —** 5/8 in. thick, two layers applied either horizontally or vertically. Inner layer attached to studs with the 1-7/8 in. nails spaced 6 in. OC. Outer layer attached to studs over inner layer with the 2-3/8 in. long nails spaced 8 in. OC. Vertical joints located over studs. All joints in face layers staggered with joints in base layers. Joints of each base layer offset with joints of base layer on opposite side.

When used in widths other than 48 in., gypsum board to be installed horizontally.

When **Steel Framing Members*** (Item 6 or 6A) are used, base layer attached to furring channels with 1 in. long Type S bugle-head steel screws spaced max 24 in. OC; face layer attached with 1-5/8 in. long Type S bugle-head steel screws spaced max 12 in. OC.

ACADIA DRYWALL SUPPLIES LTD — Type X, 5/8 Type X, Moisture Resistant Type X, Gypsum Sheathing Type X, Mold& Mildew Resistant Type X and Mold & Mildew Resistant AR Type X, Type Blueglass Exterior Sheathing

AMERICAN GYPSUM CO — Types AGX-1, M-Glass, AG-C, AGX-11, LightRoc

BEIJING NEW BUILDING MATERIALS PUBLIC LTD CO — Type DBX-1

CERTAINTEED GYPSUM INC — Types 1, FRPC, EGRG, GlasRoc, Type C, Type X, Type X-1

CGC INC — Types AR, C, IP-AR, IP-X1, IP-X2, IPC-AR, SCX, SHX, ULX, USGX, WRC, WRX

CONTINENTAL BUILDING PRODUCTS OPERATING CO, L L C — Types LGFC2A, LGFC6A, LGFC-C/A, LGFC-WD, LGLLX

GEORGIA-PACIFIC GYPSUM L L C — Types 5, 6, 9, C, DAP, DD, DA, DAPC, DGG, DS, GPFS6, LS, TG-C, Type X, Veneer Plaster Base-Type X, Water Rated-Type X, Sheathing Type-X, Soffit-Type X, GreenGlass Type X, Type LWX, Veneer Plaster Base-Type LWX, Water Rated-Type LWX, Sheathing Type-LWX, Soffit-Type LWX, Type DGLW, Water Rated-Type DGLW, Sheathing Type-DGLW, Soffit-Type DGLW, Type LW2X, Veneer Plaster Base - Type LW2X, Water Rated - Type LW2X, Sheathing - Type LW2X, Soffit - Type LW2X, Type DGL2W, Water Rated - Type DGL2W, Sheathing - Type DGL2W

NATIONAL GYPSUM CO — Types eXP-C, FSK, FSK-C, FSK-G, FSW, FSW-3, FSW-5, FSW-6, FSW-8, FSW-C, FSW-G, FSMR-C, FSL

PABCO BUILDING PRODUCTS L L C, DBA PABCO GYPSUM — Types C, PG-2, PG-3, PG-3W, PG-4, PG-5, PG-5W, PG-5WS, PG-9, PG-11, PG-C or PGS-WRS

PANEL REY S A — Types PRC, PRC2, PRX, RHX, MDX, ETX, GREX

SIAM GYPSUM INDUSTRY (SARABURI) CO LTD — Type EX-1

THAI GYPSUM PRODUCTS PCL — Type C or Type X

UNITED STATES GYPSUM CO — Types AR, C, FRX-G, IP-AR, IP-X1, IP-X2, IPC-AR, SCX, SHX, ULIX, ULX, USGX, WRC, WRX

USG BORAL DRYWALL SFZ LLC — Types C, SCX, USGX

USG MEXICO S A DE C V — Types AR, C, IP-AR, IP-X1, IP-X2, IPC-AR, SCX, SHX, ULX, USGX, WRC, WRX

4A. **Gypsum Board* —** (As an alternate to Item 4) — Nom 3/4 in. thick, installed as described in Item 4.
CGC INC — Types AR, IP-AR

UNITED STATES GYPSUM CO — Types AR, IP-AR

USG MEXICO S A DE C V — Types AR, IP-AR

4B. **Gypsum Board* —** (As an alternate to Items 4 and 4A) — 5/8 in. thick, 2 ft wide, tongue and groove edge, applied horizontally as the outer layer to one side of the assembly. Secured as described in Item 4. Joint covering (Item 2) not required.
CGC INC — Type SHX

UNITED STATES GYPSUM CO — Type SHX

USG MEXICO S A DE C V — Type SHX

4C. **Gypsum Board* —** (As an alternate to Items 4, 4A or 4B — Not Shown) — For Direct Application to Studs Only- For use on one or both sides of the wall as the base layer or one or both sides of the wall as the face layer. Nom 5/8 in. thick lead backed gypsum panels with beveled, square or tapered edges, applied vertically. Vertical joints centered over studs and staggered min 1 stud cavity on opposite sides of studs. Wallboard secured to studs with 1-5/8 in. long Type W coarse thread gypsum panel steel screws spaced 8 in. OC at perimeter and in the field when applied as the base layer. When applied as the face layer screw length to be increased to 2-1/2 in. Lead batten strips required behind vertical joints of lead backed gypsum wallboard and optional at remaining stud locations. Lead batten strips, min 1-1/2 in. wide, max 10 ft long with a max thickness of 0.125 in. placed on the face of studs and attached to the stud with two 1 in. long Type S-12 pan head steel screws, F4Lone at the top of the strip and one at the bottom of the strip. Lead discs or tabs may be used in lieu of or in addition to the lead batten strips or optional at other locations. Max 3/4 in. diam by max 0.125 in. thick lead discs compression fitted or adhered over steel screw heads or max 1/2 in. by 1-1/4 in. by max 0.125 in. thick lead tabs placed on gypsum boards underneath screw locations prior to the installation of the screws. Lead batten strips to have a purity of 99.9% meeting the Federal specification QQ-L-201f, Grade "C". Fasteners for face layer gypsum panels (Items 4, 4A or 4B) when installed over lead backed board to be min 2-1/2 in. Type S-12 bugle head steel screws spaced as described in Item 4.

RAY-BAR ENGINEERING CORP — Type RB-LBG.

4D. **Gypsum Board* —** As an Alternate to Item 4 — 5/8 in. thick applied either horizontally or vertically. Inner layers fastened to framing with 1-1/4 in. long Type W coarse thread gypsum panel steel screws spaced a max 8 in. OC, with last screw 1 in. from edge of board. Outer layers fastened to framing with 1-7/8 in. long Type W coarse thread gypsum panel steel screws spaced a max 8 in. OC, with last screw 1 in. from edge of board. When used in widths other than 48 in., gypsum board to be installed horizontally. All joints in face layers staggered with joints in base layers. Joints of each base layer offset with joints of base layer on opposite side.

AMERICAN GYPSUM CO — Types AGX-1, M-Glass, AG-C, LightRoc

4E. **Gypsum Board* —** (As an alternate to Items 4 through 4D) — 5/8 in. thick, 4 ft. wide, paper surfaced applied vertically and secured as described in Item 4.

GEORGIA-PACIFIC GYPSUM L L C — Type X ComfortGuard Sound Deadening Gypsum Board

4F. **Gypsum Board* —** (As an alternate to Item 4) — Not to be used with item 6. 5/8 in. thick, 4 ft. wide, paper surfaced, applied vertically and secured as described in Item 4.

NATIONAL GYPSUM CO — SoundBreak XP Type X Gypsum Board

4G. **Gypsum Board * —** (As an alternate to Items 4 through 4F) — Nominal 5/8 in. thick, 4 ft wide panels, applied vertically and secured as described in Item 4.

PABCO BUILDING PRODUCTS L L C, DBA PABCO GYPSUM — Types QuietRock ES

4H. **Gypsum Board* —** (As an alternate to Item 4) — Not to be used with item 6. 5/8 in. thick, 4 ft. wide, paper surfaced, applied vertically or horizontally and secured as described in Item 4.

CERTAINTEED GYPSUM INC — Type SilentFX

4I. **Gypsum Board* —** (As an alternate to item 4) — 5/8 in. thick, two layers applied either horizontally or vertically. Inner layer attached to studs with 1-1/4 in. long Type W steel screws spaced 8 in. OC. Outer layer attached to studs over inner layer with 2 in. long Type W steel screws spaced 8 in. OC offset 6 in. from base layer. Vertical joints located over studs. Vertical and horizontal joints between inner and outer layers staggered. Outer layer joints covered with joint tape and compound, screwheads covered with joint compound. As an alternate to the joint compound nom 3/32 in. thick gypsum veneer plaster may be applied to the entire surface of Classified veneer baseboard. Joints reinforced. Wallboard other than 48 in. wide must be applied horizontally. The SoundBreak XP Type X Gypsum Board is not to be used with Item 6.

NATIONAL GYPSUM CO — Types eXP-C, FSK, FSK-C, FSK-G, FSW, FSW-3, FSW-5, FSW-6, FSW-C, FSW-G, FSMR-C, SoundBreak XP Type X Gypsum Board

4J. **Gypsum Board* —** (As an alternate to Items 4) — For Direct Application to Studs Only- For use as the base layer or as the face layer. Nom 5/8 in. thick lead backed gypsum panels with beveled, square or tapered edges, applied vertically. Vertical joints centered over studs and staggered min 1 stud cavity on opposite sides of studs. Wallboard secured to studs with 1-5/8 in. long Type W coarse thread gypsum panel steel screws spaced 8 in. OC at perimeter and in the field when applied as the base layer. When applied as the face layer screw length to be increased to 2-1/2 in. Lead batten strips required behind vertical joints of lead backed gypsum wallboard and optional at remaining stud locations. Lead batten strips, min 2 in. wide, max 10 ft long with a max thickness of 0.140 in. placed on the face of studs and attached to the stud with two 1 in. long Type S-8 pan head steel screws, one at the top of the strip and one at the bottom of the strip. Lead discs, max 5/16 in. diam by max 0.140 in. thick. compression fitted or adhered over the screw heads. Lead batten strips and discs to have a purity of 99.5% meeting the Federal specification QQ-L-201f, Grades "B, C or D". Fasteners for face layer gypsum panels (Items 4, 4A or 4B) when installed over lead backed board to be min 2-1/2 in. Type S-12 bugle head steel screws spaced as described in Item 4.

MAYCO INDUSTRIES INC — "X-Ray Shielded Gypsum"

4K. **Gypsum Board* —** For use with Item 7 — 5/8 in. thick, two layers applied vertically. Inner layer attached to resilient channels with 1 in. long steel screws spaced 8 in. OC. Outer layer attached to resilient channels over inner layer with 1-5/8 in. long steel screws spaced 8 in. OC. All joints in face layers staggered with joints in base layers. Joints of each base layer offset with joints of base layer on opposite side. Insulation, Items 8 or 9 is required.

AMERICAN GYPSUM CO — Types AGX-1, M-Glass, AG-C, AGX-11

4L. **Gypsum Board* —** (As an alternate to Items 4) — For Direct Application to Studs Only- For use as the base layer or as the face layer. Nom 5/8 in. thick lead backed gypsum panels with beveled, square or tapered edges, applied vertically. Vertical joints centered over studs and staggered min 1 stud cavity on opposite sides of studs. Wallboard secured to studs with 1-5/8 in. long Type W coarse thread gypsum panel steel screws spaced 8 in. OC at perimeter and in the field when applied as the base layer. When applied as the face layer screw length to be increased to 2-1/2 in. Lead batten strips required behind vertical joints of lead backed gypsum wallboard and optional at remaining stud locations. Lead batten strips, min 2 in. wide, max 8 ft long with a max thickness of 0.14 in. placed on the face of studs and attached to the stud with construction adhesive and two 1 in. long Type S-12 pan head steel screws, one at the top of the strip and one at the bottom of the strip. Lead discs, nominal 3/8 in. diam by max 0.085 in. thick. compression fitted or adhered over the screw heads. Lead batten strips and discs to have a purity of 99.9% meeting the Federal specification QQ-L-201f, Grade "C". Fasteners for face layer gypsum panels (Items 4, 4A or 4B) when installed over lead backed board to be min 2-1/2 in. Type S-12 bugle head steel screws spaced as described in Item 4.

RADIATION PROTECTION PRODUCTS INC — Type RPP - Lead Lined Drywall

4M. **Gypsum Board* —** (As an alternate to Item 4) — 5/8 in. thick, 4 ft. wide, two layers applied vertically with vertical joints centered over studs and staggered one stud cavity on opposite sides of studs. Secured as described in Item 4.

CERTAINTEED GYPSUM INC — 5/8" Easi-Lite Type X

4N. **Gypsum Board* —** (As an alternate to 5/8 in. Type FSW in Items 4 or 4I) — Nom. 5/16 in. thick gypsum panels applied vertically or horizontally. Two layers of 5/16 in. for every single layer of 5/8 in. gypsum board described in Item 4 or 4I. Horizontal joints on the same side need not be staggered. Inner layer of each double 5/16 in. layer attached with fasteners, as described in Item 4 or 4I, spaced 24 in. OC. Outer layer of each double 5/16 in. layer attached per Item 4 or 4I.

NATIONAL GYPSUM CO — Type FSW

4O. **Wall and Partition Facings and Accessories* —** (As an alternate to Items 4 through 4N) — Nominal 5/8 in. thick, 4 ft wide panels, applied vertically and secured as described in Item 4.

PABCO BUILDING PRODUCTS L L C, DBA PABCO GYPSUM — Type QuietRock 527

4P. **Gypsum Board* —** (As an alternate to Item 4) — 5/8 in. thick, two layers applied either horizontally or vertically. Inner layer attached to studs with 1-1/4 in. long Type W steel screws spaced 10 in. OC with the last two screws 4 and 1 in. from the edges of the board. Outer layer attached to studs over inner layer with 1-7/8 in. long Type W steel screws spaced 10 in. OC offset 5 in. from base layer with the last two screws 4 and 1 in. from the edges of the board. Vertical joints between outer studs. Vertical and horizontal joints between inner and outer layers staggered. Outer layer joints covered with joint tape and compound, screwheads covered with joint compound. When used in widths other than 48 in., gypsum panels are to be installed horizontally.

CONTINENTAL BUILDING PRODUCTS OPERATING CO, L L C — Type LGFC6A, Type LGFC2A, Type LGFC-C/A, Type LGFC-WD, Type LGLLX

4Q. **Gypsum Board* —** (As an alternate to Item 4. For use with Item 13) — Any 5/8 in. thick, 4 ft. wide, Gypsum Board UL Classified for Fire Resistance (CKNX) eligible for use in Design Nos. U305 and L501 or G512. Two layers, applied either horizontally or vertically, and screwed to studs with 1-5/8 in. long Type W coarse thread steel screws at 8 in. OC at perimeter and in the field with the last two screws 4 and 3/4 in. from the edges of the board when applied as the base layer. For the face layer, screw length to be increased to 2-1/2 in. All joints in face layers staggered with joints in base layers. When used in widths other than 48 in., gypsum panels are to be installed horizontally.

5. **Molded Plastic* —** Not Shown, Optional — Solid vinyl siding mechanically secured over the outer layer to framing members in accordance with manufacturer's recommended installation details.

ALSIDE, DIV OF ASSOCIATED MATERIALS INC

GENTEK BUILDING PRODUCTS LTD

VYTEC CORP

6. **Steel Framing Members* —** (Optional, Not Shown) — Furring channels and Steel Framing Members as described below:

A. **Furring Channels —** Formed of No. 25 MSG galv steel. 2-9/16 in. or 2-23/32 in. wide by 7/8 in. deep, spaced 24 in. OC perpendicular to studs. Channels secured to studs as described in Item b. Ends of adjoining channels are overlapped 6 in. and tied together with double strand of No. 18 SWG galv steel wire near each end of overlap. As an alternate, ends of adjoining channels may be overlapped 6 in. and secured together with two self-tapping #6 framing screws, min. 7/16 in. long at the midpoint of the overlap, with one screw on each flange of the channel. Wallboard attached to furring channels as described in Item 4.

B. **Steel Framing Members* —** Used to attach furring channels (Item 6a) to studs. Clips spaced 48 in. OC., and secured to studs with No. 8 x 2-1/2 in. coarse drywall screw through the center grommet. Furring channels are friction fitted into clips. RSIC-1 clip for use with 2-9/16 in. wide furring channels. RSIC-1 (2.75) clip for use with 2-23/32 in. wide furring channels.

PAC INTERNATIONAL L L C — Types RSIC-1, RSIC-1 (2.75)

6A. **Steel Framing Members* —** (Optional, Not Shown) — Furring channels and Steel Framing Members as described below:

A. **Furring Channels —** Formed of No. 25 MSG galv steel. Spaced 24 in. OC perpendicular to studs. Channels secured to studs as described in Item b. Ends of adjoining channels overlapped 6 in. and tied together with double strand of No. 18 AWG galvanized steel wire. Gypsum board attached to furring channels as described in Item 4.

B. **Steel Framing Members* —** Used to attach furring channels (Item 6Aa) to studs. Clips spaced 48 in. OC., and secured to studs with 2 in. coarse drywall screw with 1 in. diam washer through the center hole. Furring channels are friction fitted into clips.

STUDCO BUILDING SYSTEMS — RESILMOUNT Sound Isolation Clips - Type A237R

7. **Furring Channel —** Optional — Not Shown — For use on one side of the wall with Item 4K — Resilient channels, 25 MSG galv steel, spaced vertically 24 in. OC, flange portion screw attached to one side of studs with 1-1/4 in. long diamond shaped point, double lead Phillips head steel screws. When resilient channels are used, insulation, Item 8 or 9 is required.

8. **Batts and Blankets* —** Required for use with resilient channels, Item 7, min. 3 in. thick mineral wool batts, placed to fill interior of wall, attached to the nom 4 in. face of the studs with staples placed 24 in. OC.

ROCKWOOL — Type SAFEnSOUND

THERMAFIBER INC — Type SAFB, SAFB FF

9. **Batts and Blankets* —** (As an alternate to Item 8) — Min. 3 in. thick glass fiber batts bearing the UL Classification Marking as to Surface Burning and/or Fire Resistance, friction-fitted to fill the stud cavities. See Batts and Blankets (BKNV or BZJZ) Categories for names of Classified companies.

9A. **Fiber, Sprayed* —** (Optional) — As an alternate to Batts and Blankets (Item 8), Required for use with resilient channels, Item 7, Not for use with Item 6, or 6A. — Spray applied mineral wool insulation. The fiber is applied with adhesive, at a minimum density of 4.0 pcf, to completely fill the enclosed cavity in accordance with the application instructions supplied with the product. See Fiber, Sprayed (CCAZ).

AMERICAN ROCKWOOL MANUFACTURING, LLC — Type Rockwool Premium Plus

10. **Wall and Partition Facings and Accessories* —** (Optional, Not Shown) — Nominal 1/2 in. thick, 4 ft wide panels, for optional use as an additional layer on one or both sides of the assembly. Panels attached in accordance with manufacturer's recommendations. When the QR-500 or QR-510 panel is installed between the wood framing and the UL Classified gypsum board, the required UL Classified gypsum board layer(s) is/are to be installed as indicated as to fastener type and spacing, except that the required fastener length shall be increased by a minimum of 1/2 in. Not evaluated or intended as a substitute for the required layer(s) of UL Classified Gypsum Board.

PABCO BUILDING PRODUCTS L L C, DBA PABCO GYPSUM — Type QuietRock QR-500 or QR-510

11. **Cementitious Backer Units* —** (Optional Item Not Shown — For Use On Face Of 2 Hr Systems With All Standard Items Required) — 7/16 in., 1/2 in., 5/8 in., 3/4 in. or 1 in. thick, min. 32 in. wide. Applied vertically with vertical joints centered over studs. Face layer fastened over gypsum board to studs and runners with cement board screws of adequate length to penetrate stud by a minimum of 3/8 in. for steel framing members, and a minimum of 3/4 in. for wood framing members spaced a max of 8 in. OC.

NATIONAL GYPSUM CO — Type DuraBacker, PermaBase, DuraBacker Plus, or PermaBase Plus

12. **Wall and Partition Facings and Accessories* —** (Optional, Not Shown) - When the Wall Assembly is used as an External Wall, on the External side of the wall one of the following Wall and Partition and Facing Accessories may be used, refer to items (A) to (C) below.

A. **Non Insulated system with metal channels —** Install moisture barrier over the Gypsum Board Item 4 and Install Acry Metal Channels vertically at a horizontal spacing not greater than 24 inches OC., over the moisture barrier. Acry Metal Channels attached through the moisture barrier and the Gypsum Board to the Wood Studs using fasteners specified by the manufacturer and fasteners spaced max., 24 in. OC. Install Acrytec Panels on Acry Metal Channels using 1-1/4" long corrosion coated stainless steel screws spaced at a max spacing of 24 inches OC, along with manufacturer's approved adhesive (3M 540 or Tremco Vulcum 116). Adhesive to be applied in a zigzag pattern along every channel. Joint treatment in between panels shall be Tremco illmod 600 pre compressed polyurethane foam sealant.

B. **Insulated system with metal channels —** Install moisture barrier over the Gypsum Board Item 4. Install galvanized Z girt channels specified by the manufacturer over the moisture barrier and the Gypsum Board Item 4. Z girt channels to be installed horizontally at a max. spacing of 24" OC. Z girt channels attached through the Gypsum Board and the moisture barrier to the wood studs with screws provided by the manufacturer at a max spacing of 24 inches OC. Install mineral wool insulation between the Z girts. Maximum thickness of mineral wool insulation not to exceed 6 in. As per manufacturer's instructions install Acry Metal Channels vertically over the Z girts at a max horizontal spacing of 24 in. OC. Acrytec Panels installed on Acry channel with 1-1/4" long corrosion coated stainless steel screws at a max spacing of 24 in. OC, along with manufacturers approved adhesive (3M 540 or Tremco Vulcum 116). Adhesive to be applied in a zigzag pattern along every channel. Joint treatment in between panels to be Tremco illmod 600 pre compressed polyurethane foam sealant.

C. **Non insulated wood strapping system —** Install moisture barrier over the Gypsum Board Item 4 and Install 1" x 3" wood strapping vertically at a horizontal spacing not greater than 24 inches OC., over the moisture barrier. 1" x 3" wood strapping attached through the moisture barrier and the Gypsum Board to the Wood studs using fasteners specified by the manufacturer and fasteners spaced max., 24 in. OC. Acrytec Panels to be installed on the 1" x 3" wood strapping using manufacturers approved stainless steel fasteners spaced at maximum 24 inches OC along with Tremco Vulcum 116 adhesive applied in a zigzag pattern along every wood strap. Joint treatment in between panels to be Tremco illmod 600 pre compressed polyurethane foam sealant.

D. **Insulated Wood Strapping System —** Install moisture barrier over the Gypsum Board Item 4. Install Extruded Polystyrene Insulation over moisture barrier and the Gypsum Board Item 4, max thickness of insulation not to exceed 4 inches. Install 1" x 3" wood strapping vertically at a horizontal spacing not greater than 24 inches OC. Wood strapping attached through the insulation, the Gypsum Board and moisture barrier to the Wood Studs using fasteners specified by the manufacturer and fasteners spaced max. 24 in. OC. Acrytec Panels to be installed over the wood strapping using manufacturers approved stainless steel fasteners at a max spacing of 24 in. OC and Tremco Vulcum 116 adhesive applied in a zigzag pattern along every wood strap. Joint treatment in between panels to be Tremco illmod 600 pre compressed polyurethane foam sealant.

ACRYTEC PANEL INDUSTRIES — Nominal 5/8 inch thick Acrytec Panel.

13. **Foamed Plastic* —** (Optional - For use with Item 4Q) — Spray applied, foamed plastic insulation, at any thickness from partial fill to completely filling stud cavity.

SES FOAM INC — SES 2 lb. Spray Foam and Sucraseal 0.5 lb. Spray Foam. For use in Bearing and Non-Load Bearing Walls.

*** Indicates such products shall bear the UL or cUL Certification Mark for jurisdictions employing the UL or cUL Certification (such as Canada), respectively.**

Last Updated on 2017-10-10

Design No. U375

March 05, 2018

Nonbearing Wall Rating - 2 HR (Area Separation Wall, See Items 1, 2 and 3)

Bearing Wall Rating 2 Hr (Protected Wall, See Items 4 and 4A)

Nonbearing Wall Rating 2 Hr (Protected Wall, See Item 4B and 4C)
Finish Rating - (See Item 6)

*** Indicates such products shall bear the UL or cUL Certification Mark for jurisdictions employing the UL or cUL Certification (such as Canada), respectively.**

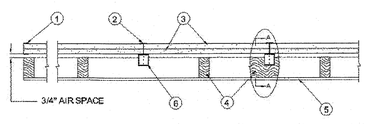

CONFIGURATION A
EXPOSED TO FIRE FROM AREA SEPARATION WALL SIDE ONLY

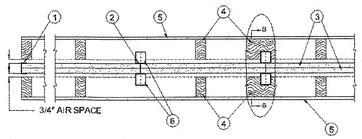

CONFIGURATION B
EXPOSED TO FIRE FROM EITHER SIDE

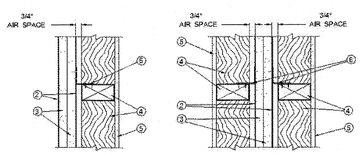

Configuration C

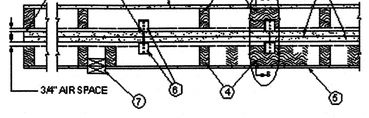

CONFIGURATION D
EXPOSED TO FIRE FROM EITHER SIDE

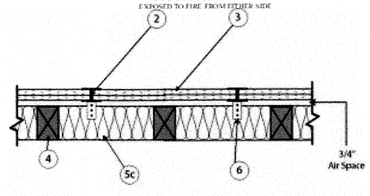

Configuration E

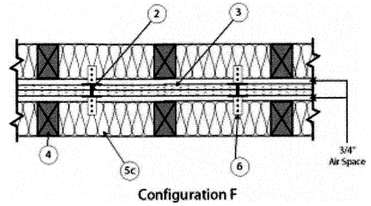

Configuration F

LAKE COUNTY BUILDING SERVICES
Any errors or omissions in these plans shall be made to conform with the applicable code requirements per Florida Building Code, in accordance with Section 107. Plans were reviewed for code compliance and shall be kept on job site.

AREA SEPARATION WALL (Nonbearing Wall) — (Max Height - See Item 3)
1. **Floor, Intermediate or Top Wall Track —** 2 in. wide channel shaped with 1 in. long legs formed from No. 25 MSG galv steel, secured with suitable fasteners spaced 24 in. OC.
2. **Steel Studs —** Steel members formed from No. 25 MSG galv steel having "H" - shaped flanged spaced 24 in. OC; overall depth 2 in. and flange width 1-3/8 in.
3. **Gypsum Board* —** Two layers of 1 in. thick gypsum board liner panels, supplied in nom 24 in. widths. Vertical edges of panels friction fitted into "H" - shaped studs.
AMERICAN GYPSUM CO — Types AG-S (Max Height - 66 ft), M-Glass (Max Height - 66 ft)
GEORGIA-PACIFIC GYPSUM L L C — Type TP-6 (Max Height - 66 ft), Type DGUSL (Max Height - 44 ft), Type TRSL (Max. Height - 44 ft)
PROTECTED WALL: (Bearing or Nonbearing Wall as indicated under Items 4, through 4G. When Bearing, Load Restricted for Canadian Applications — See Guide HYPERLINK "http://database.ul.com/cgi-bin/XYV/template/LISEXT/1FRAME/showpage.html?name=BXUV7.GuideInfo&ccnshorttitle=Fire+Resistance+Ratings+-+CAN/ULC-S101M+Certified+for+Canada&objid=1074206558&cfgid=1073741824&version=versionless&parent_id=1073984820&sequence=1"BXUV7)
4. **Wall Studs —** Bearing or Nonbearing Wall. Nom 2 by 4 in. max spacing 24 in. OC. Studs oriented with 2 in. face parallel to liner panels (Item No. 3). Studs cross-braced where necessary for clip attachment. Min 3/4 in. separation between wood framing and area separation wall. Studs may be also be orientated with 2 in. face perpendicular to liner panels if Type AG-S or M-Glass panels are used.
4A. **Steel Studs —** (As an alternate to Item 4, not shown) — For Bearing Wall - Corrosion protected steel studs, min No. 20 MSG (0.0329 in., min bare metal thickness) steel or min 3- 1/2 in. wide, min No. 20 GSG (0.036 in. thick) galv steel or No. 20 MSG (0.033 in. thick) primed steel, cold formed, shall be designed in accordance with the current edition of the Specification for the Design of Cold-Formed Steel Structural Members by the American Iron and Steel Institute. All design details enhancing the structural integrity of the wall assembly, including the axial design load of the studs, shall be as specified by the steel stud designer and/or producer, and shall meet the requirements of all applicable local code agencies. The max stud spacing of wall assemblies shall not exceed 24 in. OC. Studs attached to floor and ceiling tracks with 1/2 in. long Type S-12 steel screws on both sides of studs or by welded or bolted connections designed in accordance with the AISI specifications. Top and bottom tracks shall consist of steel members, min No. 20 MSG (0.0329 in., min bare metal thickness) steel or min No. 20 GSG (0.036 in. thick) galv steel or No. 20 MSG (0.033 in. thick) primed steel, that provide a sound structural connection between steel studs, and to adjacent assemblies such as a floor, ceiling, and/or other walls. Attached to floor and ceiling assemblies with steel fasteners spaced not greater than 24 in. O.C. Studs cross-braced with stud
4B. **Steel Studs —** (As an alternate to Items 4 and 4A) - For Nonbearing Wall - Channel shaped, fabricated from min 25 MSG corrosion-protected steel, min 3-1/2 in. wide, min 1-1/4 in. flanges and 1/4 in. return, spaced a max of 24 in. OC. Studs to be cut 3/8 to 3/4 in. less than assembly height. Top and bottom tracks shall be channel shaped, fabricated from min 25 MSG corrosion-protected steel, min width to accommodate stud size, with min 1 in. long legs, attached to floor and ceiling with fasteners 24 in. OC max. Studs cross-braced with stud framing at midheight where necessary for clip attachment. Min 3/4 in. separation between steel framing and area separation wall.
4C. **Framing Members* — Steel Studs —** (As an alternate to Item 4, 4A, and 4B) - For Nonbearing Wall. Proprietary channel shaped studs, 3-5/8 in. wide spaced a max of 24 in. OC. Studs to be cut 3/4 in less than the assembly height and installed with a 1/2 in. gap between the end of the stud and track at the bottom of the wall. Studs cross-braced with stud framing at midheight where necessary for clip attachment. Min 3/4 in. separation between steel framing and area separation wall.
CALIFORNIA EXPANDED METAL PRODUCTS CO — Viper25 ™

CRACO MFG INC — SmartStud25™

MARINO/WARE, DIV OF WARE INDUSTRIES INC — Viper25™

FUSION BUILDING PRODUCTS — Viper25™

IMPERIAL MANUFACTURING GROUP INC — Viper25™

TELLING INDUSTRIES L L C — Viper25™

4E. **Framing Members* — Floor and Ceiling Runner —** For use with Item 4C, proprietary channel shaped runners, 3-5/8 in. wide attached to floor and ceiling with fasteners 24 in. OC max.
CALIFORNIA EXPANDED METAL PRODUCTS CO — Viper25™ Track
CRACO MFG INC — SmartTrack25™

MARINO/WARE, DIV OF WARE INDUSTRIES INC — Viper25™ Track
FUSION BUILDING PRODUCTS — Viper25™ Track
IMPERIAL MANUFACTURING GROUP INC — Viper25™ Track
TELLING INDUSTRIES L L C — Viper25™ Track
4F. **Framing Members* — Steel Studs —** (As an alternate to Item 4, 4A, 4B, and 4CD) - For Nonbearing Wall. Proprietary channel shaped studs, 3-5/8 in. wide spaced a max of 24 in. OC. Studs to be cut 3/4 in less than the assembly height and installed with a 1/2 in. gap between the end of the stud and track at the bottom of the wall. Studs cross-braced with stud framing at midheight where necessary for clip attachment. Min 3/4 in. separation between steel framing and area separation wall.
STUDCO BUILDING SYSTEMS — CROCSTUD
4G. **Framing Members* — Floor and Ceiling Runner —** For use with Item 4F, proprietary channel shaped runners, 3-5/8 in. wide attached to floor and ceiling with fasteners 24 in. OC max.
STUDCO BUILDING SYSTEMS — CROCSTUD Track
5. **Gypsum Board —** Classified or Unclassified — Min 1/2 in thick, 4 ft wide, applied either horizontally or vertically. Gypsum board attached to wood studs with 1-1/4 in. long steel drywall nails spaced 8 in. OC or 1 in. long Type W coarse thread steel screws spaced 12 in. OC. Gypsum board attached to steel studs with 1 in. long Type S or S-12 steel screws spaced 12 in. OC. Vertical joints located over studs. Joints may or may not be covered with paper tape and joint compound. Nail or screw heads may or may not be covered with joint compound.
5A. **Gypsum Board —** (As an alternate to Item 5) Nom 5/8 in thick, 4 ft wide, applied either horizontally or vertically. Gypsum board attached to wood studs with 1-1/4 in. long steel drywall nails space 8 in. OC or 1 in. long Type W coarse thread steel screws spaced 12 in. OC. Gypsum board attached to steel studs with 1 in. long Type S or S-12 steel screws spaced 12 in. OC. Vertical joints located over studs. Joints may or may not be covered with paper tape and joint compound. Nail or screw heads may or may not be covered with joint compound.
GEORGIA-PACIFIC GYPSUM L L C — Type X ComfortGuard Sound Deadening Gypsum Board
5B. **Plywood Sheathing or OSB —** (Not Shown) — As an alternate to Item 5 or 5A, Min 1/2 in. thick plywood or OSB applied horizontally or vertically to wood or steel studs. Vertical joints located over studs. Horizontal joints shall be butted tight to form a closed joint. Fastened to studs with nails or screws of sufficient length, spaced 12 in. OC. Joints and fastener heads are not required to be treated.
5C. **Batts and Blankets* —** (Not Shown) — As an alternate to Items 5, 5A and 5B when Types AG-S, M-Glass or TP-6 are used. Glass fiber or mineral wool insulation, min. 3-1/2 in. thick, placed to completely fill the wood or steel stud cavities. See Batts and Blankets (BKNV) category in the Building Materials Directory and Batts and Blankets (BZJZ) category in the Fire Resistance Directory for name of Classified Companies.
6. **Attachment Clips —** Aluminum angle, min. 0.063 in. thick, min 2 in. wide with min 2 in. and 2-1/4 in. legs or min. 0.050 in. thick, min. 2 in. wide with min 2 in. and 2-1/2 in. legs. Clips secured with Type S screws min. 3/8 in. long to "H" studs or steel studs and with Type W screws min. 1-1/4 in. long to wood framing through holes provided in clip.

System No.	Height Limitation
1	23 ft
2	44 ft
3	66 ft

For wood studs, the Finish Rating of the various Configurations is 120 minutes, unless Configuration A, C or E are used at a height exceeding 44 ft., in which case the Finish Rating is 115 min. Finish rating has not been evaluated for steel studs.
System 1
6A. Clip placement (Item 6) for separation walls up to 23 ft high: Space clips a max of 10 ft OC vertically between wood or steel framing and "H" studs.
System 2
6B. Clip placement (Item 6) for separation walls up to 44 ft high. Space clips as described in Item 6A for upper 24 ft. Remaining wall area below requires clips spaced a max 5 ft OC vertically between wood or steel framing and "H" studs.
System 3
6C. Clip placement (Item 6) for separation walls up to 66 ft high: Space clips as described in Item 6A for upper 24 ft. Space clips as described in item 6B for next 20 ft. below the upper 24 ft. Remaining wall area below requires clips spaced a max of 40 in. OC vertically between wood or steel framing and "H" studs.
7. **Non-Bearing Wall Partition Intersection —** (Optional) — For wood framing — Two nominal 2 by 4 in. stud or nominal 2 by 6 in. stud nailed together with two 3in. long 10d nails spaced a max. 16 in. OC. vertically and fastened to one side of the minimum 2 by 4 in. stud with 3 in. long 10d nails spaced a max 16 in. OC. vertically. Intersection between partition wood studs to be flush with the 2 by 4 in. studs. The wall partition wood studs are to be framed with a second 2 by 4 in. wood stud fastened with 3 in. long 10d nails spaced a max. 16 in. OC. vertically. Maximum one non-bearing wall partition intersection per stud cavity. Non-bearing wall partition stud depth shall be at a minimum equal to the depth of the wall.
*** Indicates such products shall bear the UL or cUL Certification Mark for jurisdictions employing the UL or cUL Certification (such as Canada), respectively.**

RECEIVED FE

Design No. U356

June 27, 2014

(Exposed to Fire on Interior Face Only)
Bearing Wall Rating — 1 Hr
Finish Rating — 23 Min or 25 Min (See Item 2C)

When used in Canada it is required that all materials included within the UL design are also cUL certified.

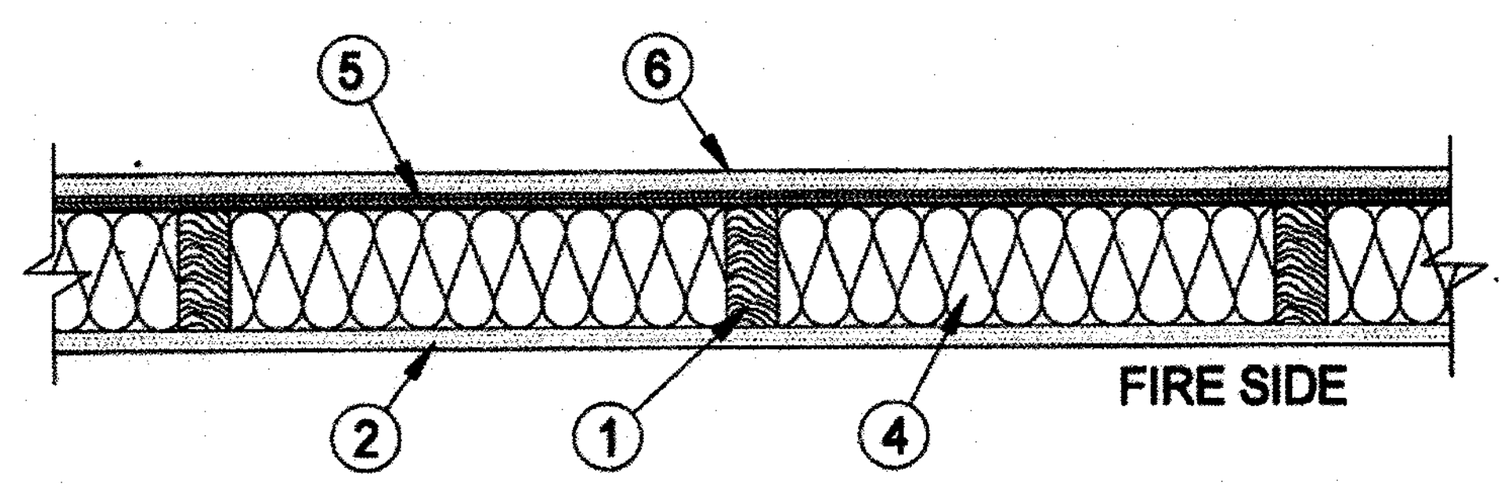

HORIZONTAL SECTION

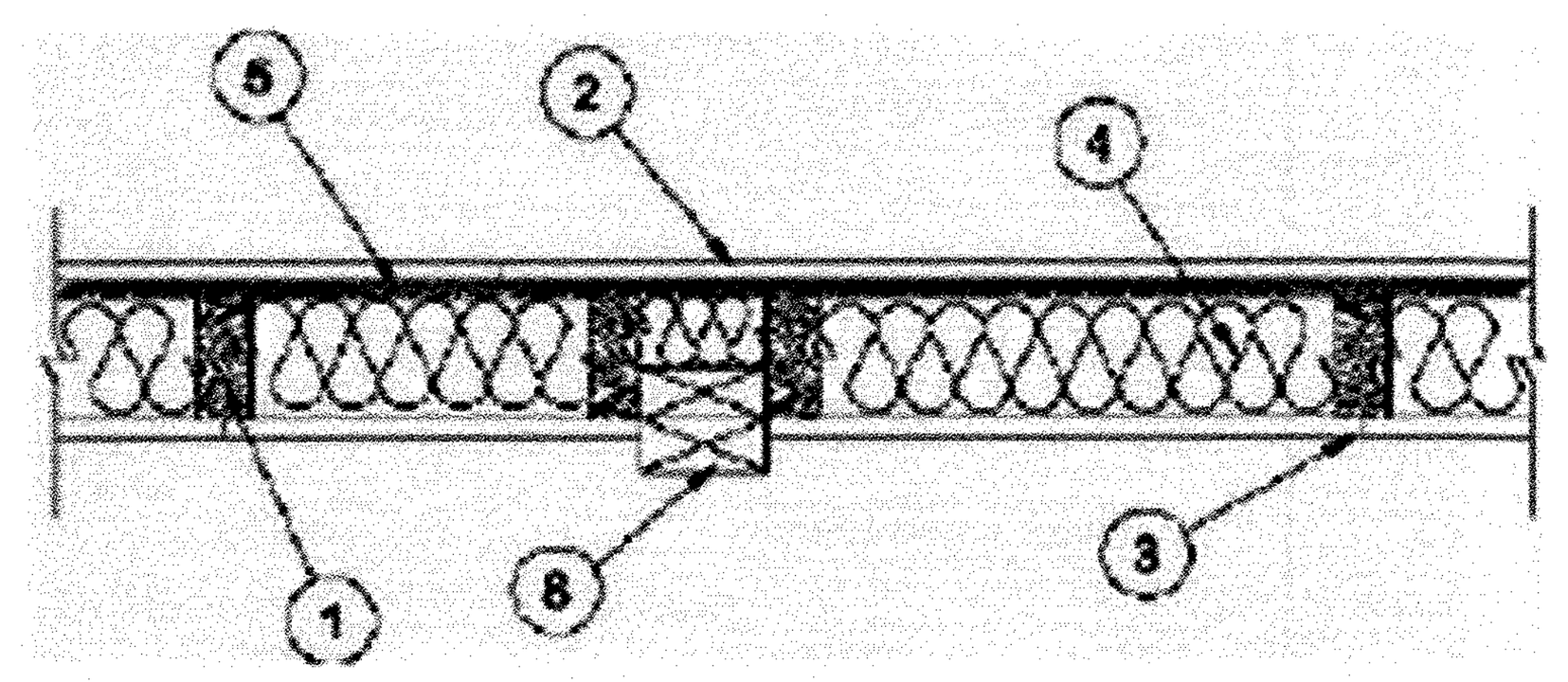

1. Wood Studs — Nom 2 by 4 in. spaced 16 in. OC with two 2 by 4 in. top and one 2 by 4 in. bottom plates. Studs laterally-braced by wood structural panel sheathing (Item 5) . When Mineral and Fiber Boards* (Item 5A) are considered as bracing for the studs, the load is restricted to 76% of allowable axial load. Walls effectively fire stopped at top and bottom of wall.
2. Gypsum Board* —Any 5/8 in. thick UL Classified Gypsum Board that is eligible for use in Design Nos. L501, G512 or U305. Nom 5/8 in. thick, 4 ft wide, applied vertically and nailed to studs and bearing plates 7 in. OC with 6d cement-coated nails, 1-7/8 in. long with 1/4 in. diam head.
When Item 7, Steel Framing Members*, is used, gypsum panels attached to furring channels with 1 in. long Type S bugle-head steel screws spaced 12 in. OC.
When Item 7A, 7B, or 7C Steel Framing Members*, is used, two layers of gypsum panels attached to furring channels. Base layer attached to furring channels with 1 in.
long Type S bugle-head steel screws spaced 12 in. OC. Face layer attached to furring channels with 1-5/8 in. long Type S bugle-head steel screws spaced 12 in. OC. All
joints in face layers staggered with joints in base layers.
ACADIA DRYWALL SUPPLIES LTD (View Classification) — CKNX.R25370
AMERICAN GYPSUM CO (View Classification) — CKNX.R14196
BEIJING NEW BUILDING MATERIALS PUBLIC LTD CO (View Classification) CKNX.R19374
CERTAINTEED GYPSUM INC (View Classification) — CKNX.R3660
CGC INC (View Classification) — CKNX.R19751
CONTINENTAL BUILDING PRODUCTS OPERATING CO, L L C (View Classification) — CKNX.R18482
GEORGIA-PACIFIC GYPSUM L L C (View Classification) — CKNX.R2717
LOADMASTER SYSTEMS INC (View Classification) — CKNX.R11809
NATIONAL GYPSUM CO (View Classification) — CKNX.R3501
PABCO BUILDING PRODUCTS L L C, DBA PABCO GYPSUM (View Classification) — CKNX.R7094
PANEL REY S A (View Classification) — CKNX.R21796
SIAM GYPSUM INDUSTRY (SARABURI) CO LTD (View Classification) — CKNX.R19262
THAI GYPSUM PRODUCTS PCL (View Classification) — CKNX.R27517
UNITED STATES GYPSUM CO (View Classification) — CKNX.R1319
USG MEXICO S A DE C V (View Classification) — CKNX.R16089
2A. Gypsum Board* — (As an alternate to Item 2, not shown) - Any 5/8 in. thick 4 ft wide gypsum panels that are eligible for use in Design Nos. L501, G512 or U305, supplied by the Classified Companies listed below shown in the Gypsum Board* (CKNX) category. Applied vertically and attached to studs and bearing plates with 1-1/4 in. long Type W coarse thread gypsum panel steel screws spaced a max 8 in. OC, with last screw 1 in. from edge of board.
CGC INC
UNITED STATES GYPSUM CO
USG MEXICO S A DE C V
2B. Gypsum Board* — (As an alternate to Item 2, not shown) - 5/8 in. thick 4 ft wide gypsum panels applied vertically and attached to studs and bearing plates with 1-1/4 in. long Type W coarse thread gypsum panel steel screws spaced a max 8 in. OC, with last screw 1 in. from edge of board.
ACADIA DRYWALL SUPPLIES LTD — Type X, 5/8 Type X, Type Blueglass Exterior Sheathing
AMERICAN GYPSUM CO — Types AGX-1, M-Glass, AG-C
CERTAINTEED GYPSUM INC — Type C or Type X
GEORGIA-PACIFIC GYPSUM L L C — Types X, Veneer Plaster Base-Type X, Water Rated-Type X, Sheathing Type-X, Soffit-Type X, Type X ComfortGuard Sound Deadening Gypsum Board.
PABCO BUILDING PRODUCTS L L C, DBA PABCO GYPSUM — Types PG-11, PGS-WRS.
THAI GYPSUM PRODUCTS PCL — Type C or Type X
2C. Gypsum Board* — (As an alternate to Item 2, not shown) - For Use with Item 5A only - 5/8 in. thick 4 ft wide gypsum panels applied horizontally and attached to studs and bearing plates with 1-1/4 in. long Type W coarse thread gypsum panel steel screws spaced a max 8 in. OC, with last screws 1 in.and 4 in. from edges of board. Finish Rating is 25 min.
ACADIA DRYWALL SUPPLIES LTD — 5/8 Type X, Type Blueglass Exterior Sheathing
GEORGIA-PACIFIC GYPSUM L L C — Type X, Veneer Plaster Base-Type X, Water Rated-Type X, Sheathing Type-X,Soffit-Type X
PABCO BUILDING PRODUCTS L L C, DBA PABCO GYPSUM — Types PG-11, PGS-WRS.
2D. Gypsum Board* — (As an alternate to Item 2) - Not to be used with item 7. 5/8 in. thick, 4 ft. wide, paper surfaced, applied vertically only and fastened to the studs and plates with 6d cement coated nails 1-7/8 in. long, 0.0915 in. shank diam and 1/4 in. diam heads, 7 in. OC.
NATIONAL GYPSUM CO — SoundBreak XP Type X Gypsum Board
2E Gypsum Board* — (As an alternate to Items 2 through 2D) — Nominal 5/8 in. thick, 4 ft wide panels, secured as described in Item 2.
PABCO BUILDING PRODUCTS L L C, DBA PABCO GYPSUM — Type QuietRock ES.
2F. Gypsum Board* — (As an alternate to Item 2) - Not to be used with item 7. 5/8 in. thick, 4 ft. wide, paper surfaced, applied vertically only and fastened to the studs and plates with 6d cement coated nails 1-7/8 in. long, 0.0915 in. shank diam and 1/4 in. diam heads, 7 in. OC.
CERTAINTEED GYPSUM INC — Type SilentFX
2G. Wall and Partition Facings and Accessories* — (As an alternate to Items 2 through 2F) — Nominal 5/8 in. thick, 4 ft wide panels, secured as described in Item 2.
PABCO BUILDING PRODUCTS L L C, DBA PABCO GYPSUM — Type QuietRock 527.
3. Joints and Nailheads — (Not Shown) — Wallboard joints covered with tape and joint compound. Nail heads covered with joint compound.
4. Batts and Blankets* — Mineral fiber or glass fiber insulation, 3-1/2 in. thick, pressure fit to fill wall cavities between studs and plates. Mineral fiber insulation to be unfaced and to have a min density of 3 pcf. Glass fiber insulation to be faced with aluminum foil or kraft paper and to have a min density of 0.9 pcf (min R-13 thermal insulation rating).
See **Batts and Blankets*** (BKNV) Category in the Building Materials Directory and Batts and Blankets* (BZJZ) Category in the Fire Resistance Directory for names of Classified Companies.
4A. Fiber, Sprayed* — As an alternate to Batts and Blankets (Item 4) — Spray applied cellulose material. The fiber is applied with water to completely fill the enclosed cavity in accordance with the application instructions supplied with the product with a nominal dry density of 2.7 lb/ft3. Alternate Application Method: The fiber is applied without water or adhesive at a nominal dry density of 3.5 lb/ft3, in accordance with the application instructions supplied with the product.
U S GREENFIBER L L C — INS735& INS745 for use with wet or dry application. INS510LD, INS515LD, INS541LD, INS735, INS745, INS765LD, and INS770LD are to be used for dry application only.
4B. Fiber, Sprayed* — As an alternate to Item 4 and 4A — Spray applied cellulose material. The fiber is applied with water to completely fill the enclosed cavity in accordance with the application instructions supplied with the product. Nominal dry density of 4.58 lb/ft3.
NU-WOOL CO INC — Cellulose Insulation
4C. Fiber, Sprayed* — As an alternate to Batts and Blankets (Item 4) - Spray applied cellulose fiber. The fiber is applied with water to completely fill the enclosed cavity
in accordance with the application instructions supplied with the product. The minimum dry density shall be 4.30 lbs/ft3.
INTERNATIONAL CELLULOSE CORP — Celbar-RL
5. Wood Structural Panel Sheathing — Min 7/16 in. thick, 4 ft wide wood structural panels, min grade "C-D" or "Sheathing" . Installed with long dimension of sheet (strength axis) or face grain of plywood parallel with or perpendicular to studs. Vertical joints centered on studs. Horizontal joints backed with nom 2 by 4 in. wood blocking. Attached to studs on exterior side of wall with 6d cement coated box nails spaced 6 in. OC at perimeter of panels and 12 in. OC along interior studs.
5A. Mineral and Fiber Boards* — As an alternate to Item 5 - Min 1/2 in. thick, 4 ft wide sheathing, installed vertically to studs. Vertical joints centered on studs. Horizontal joints backed with nom 2 by 4 in. wood blocking. Attached to studs on exterior side of wall with 1-1/2 in. long galvanized roofing nails spaced 6 in. OC at perimeter of panels and 12 in. OC along interior studs. As an option a weather resistive barrier may be applied over the Mineral and Fiber Boards.
GEORGIA-PACIFIC PANEL PRODUCTS L L C — Types FiberBrace or QuietBrace
6. Exterior Facings — Installed in accordance with the manufacturer's installation instructions. One of the following exterior facings is to be applied over the sheathing:
A. Vinyl Siding — Molded Plastic* — Contoured rigid vinyl siding having a flame spread value of 20 or less.
See Molded Plastic (BTAT) category in the Building Materials Directory for names of manufacturers.
B. Particle Board Siding — Hardboard exterior sidings including patterned panel or lap siding.
C. Wood Structural Panel or Lap Siding — APA Rated Siding, Exterior, plywood, OSB or composite panels with veneer faces and structural wood core, per PS 1 or APA Standard PRP-108, including textured, rough sawn, medium density overlay, brushed, grooved and lap siding.
D. Cementitious Stucco — Portland cement or synthetic stucco systems with self-furring metal lath or adhesive base coat. Thickness from 3/8 to 3/4 in., depending on system.
E. Brick Veneer — Any type on nom 4 in. wide brick veneer. When brick veneer is used, the rating is applicable with exposure on either face. Brick veneer fastened with corrugated metal wall ties attached over sheathing to wood studs with 8d nail per tie: ties spaced not more than each sixth course of brick and max 32 in. OC horizontally. One in. air space provided between brick veneer and sheathing.
F. Exterior Insulation and Finish System (EIFS) — Nom 1 in. Foamed Plastic* insulation bearing the UL Classification Marking, attached over sheathing and finished with coating system, or Portland cement or synthetic stucco systems, in accordance with manufacturer's instructions. See Foamed Plastic (BRYX and CCVW) categories for names of Classified companies.
G. Siding — Aluminum or steel siding attached over sheathing to studs.
H. Fiber-Cement Siding — Fiber-cement exterior sidings including smooth and patterned panel or lap siding.
7. Steel Framing Members — (Optional, Not Shown)* — Furring Channels and Steel Framing Members as described below:
a. Furring Channels — Formed of No. 25 MSG galv steel. 2-9/16 in. or 2-23/32 in. wide by 7/8 in. deep, spaced 24 in. OC perpendicular to studs. Channels secured to studs as described in Item b. Ends of adjoining channels are overlapped 6 in. and tied together with double strand of No. 18 SWG galv steel wire near each end of overlap. As an alternate, ends of adjoining channels may be overlapped 6 in. and secured together with two self-tapping #6 framing screws, min. 7/16 in. long at the midpoint of the overlap, with one screw on each flange of the channel. Gypsum board
attached to furring channels as described in Item 2.
b. Steel Framing Members* — Used to attach furring channels (Item 7A) to studs . Clips spaced 48 in. OC., and secured to studs with No. 8 x 2-1/2 in. coarse drywall screw through the center grommet. Furring channels are friction fitted into clips. RSIC-1 clip for use with 2-9/16 in. wide furring channels. RSIC-1 (2.75) clip for use with 2-23/32 in. wide furring channels.
PAC INTERNATIONAL INC — Types RSIC-1, RSIC-1 (2.75).
7A. Steel Framing Members (Optional, Not Shown)* — Furring channels and Steel Framing Members as described below:
a. Furring Channels — Formed of No. 25 MSG galv steel, spaced 24 in. OC perpendicular to studs. Channels secured to studs as described in Item
b. Ends of adjoining channels are overlapped 6 in. and tied together with double strand of No. 18 SWG galv steel wire near each end of overlap. Two
layers of gypsum board attached to furring channels as described in Item 2.
b. Steel Framing Members* — Used to attach furring channels (Item 7Aa) to interior side of studs. Clips spaced 48 in. OC., and secured to studs
with two No. 8 x 2-1/2 in. coarse drywall screws, one through the hole at each end of the clip. Furring channels are friction fitted into clips.
KINETICS NOISE CONTROL INC — Type Isomax.
7B. Steel Framing Members* — (Optional, Not Shown) - Furring channels and Steel Framing Members as described below:
a. Furring Channels — Formed of No. 25 MSG galv steel. 2-3/8 in. wide by 7/8 in. deep, spaced 24 in. OC perpendicular to studs. Channels secured to studs as described in Item b. Ends of adjoining channels are overlapped 6 in. and tied together with double strand of No. 18 SWG galv steel wire near each end of overlap. As an alternate, ends of adjoining channels may be overlapped 6 in. and secured together with two self-tapping #6 framing screws, min. 7/16 in. long at the midpoint of the overlap, with one screw on each flange of the channel. Gypsum board attached to furring channels as described in Item 2.
b. Steel Framing Members* — Used to attach furring channels (Item a) to studs. Clips spaced 48 in. OC. Genie clips secured to studs with No. 8 x 1-1/2 in. coarse drywall screw through the center hole. Furring channels are friction fitted into clips.
PLITEQ INC — Type Genie Clip
7C. Steel Framing Members — (Optional, Not Shown)* - Furring channels and resilient sound isolation clip as described below:
a. Furring Channels — Formed of No. 25 MSG galv steel. Spaced 24 in. OC perpendicular to studs. Channels secured to studs as described in Item
b. Ends of adjoining channels overlapped 6 in. and secured together with Last Updated on 2014-06-27 Self Drilling screws (2 per side 1 in. and 4 in. from overlap edge). Gypsum board attached to furring channels as described in Item 2. Side joint furring channels shall be attached to studs with RESILMOUNT Sound Isolation Clips - Type A237R located approximately 2 in. from each end of length of channel. Both Gypsum Boards at side
joints fastened into channel with screws spaced 8 in. OC, approximately 1/2 in. from joint edge.
b. Steel Framing Members* — Resilient sound isolation clip used to attach furring channels (Item 7Ca) to studs. Clips spaced 16 in. OC., and secured to studs with No. 10 x 2-1/2 in. coarse drywall screw through the center hole. Furring channels are friction fitted into clips.
STUDCO BUILDING SYSTEMS — RESILMOUNT Sound Isolation Clips - Type A237R
8. Non-Bearing Wall Partition Intersection — (Optional) Two nominal 2 by 4 in. stud or nominal 2 by 6 in. stud nailed together with two 3in. long 10d nails spaced a max. 16 in. OC. vertically and fastened to one side of the minimum 2 by 4 in. stud with 3 in. long 10d nails spaced a max 16 in. OC. vertically. Intersection between partition wood studs to be flush with the 2 by 4 in. studs. The wall partition wood studs are to be framed by with a second 2 by 4 in. wood stud fastened with 3 in. long 10d nails spaced a max. 16 in. OC. vertically. Maximum one non-bearing wall partition intersection per stud cavity. Non-bearing wall partition stud depth shall be at a minimum equal to the depth of the bearing wall.

*Bearing the UL Classification Mark

H1 **UL U356**
NTS

Design No. U331

July 11, 2018

Bearing Wall Rating — 1 Hr.

This design was evaluated using a load design method other than the Limit States Design Method (e.g., Working Stress Design Method). For jurisdictions employing the Limit States Design Method, such as Canada, a load restriction factor shall be used — See Guide BXUV or BXUV7

*** Indicates such products shall bear the UL or cUL Certification Mark for jurisdictions employing the UL or cUL Certification (such as Canada), respectively.**

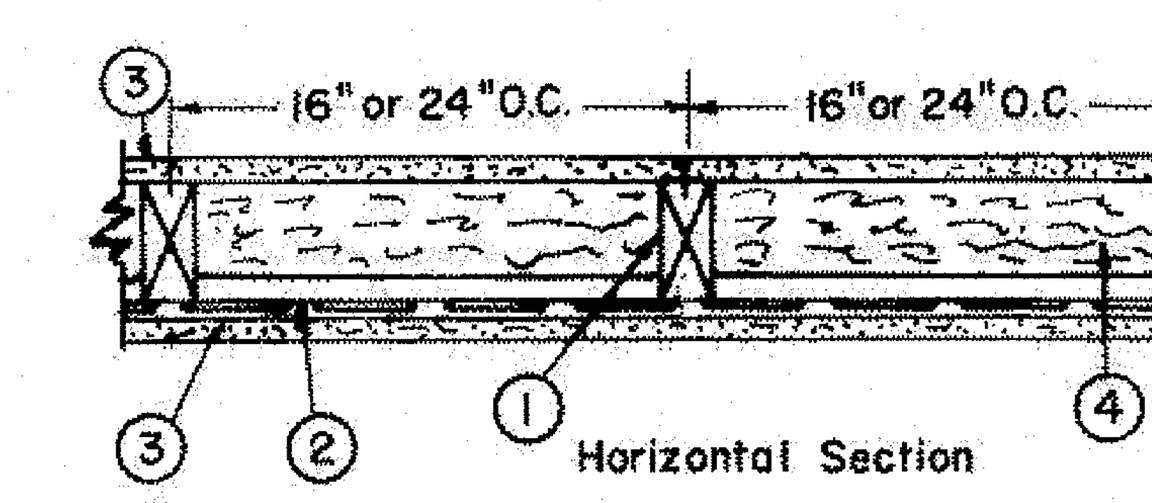

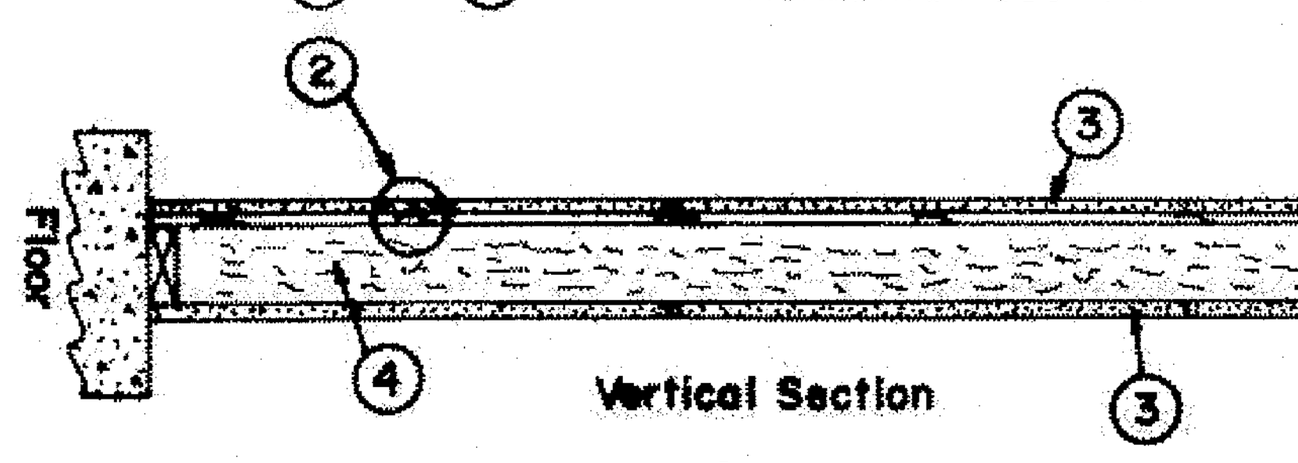

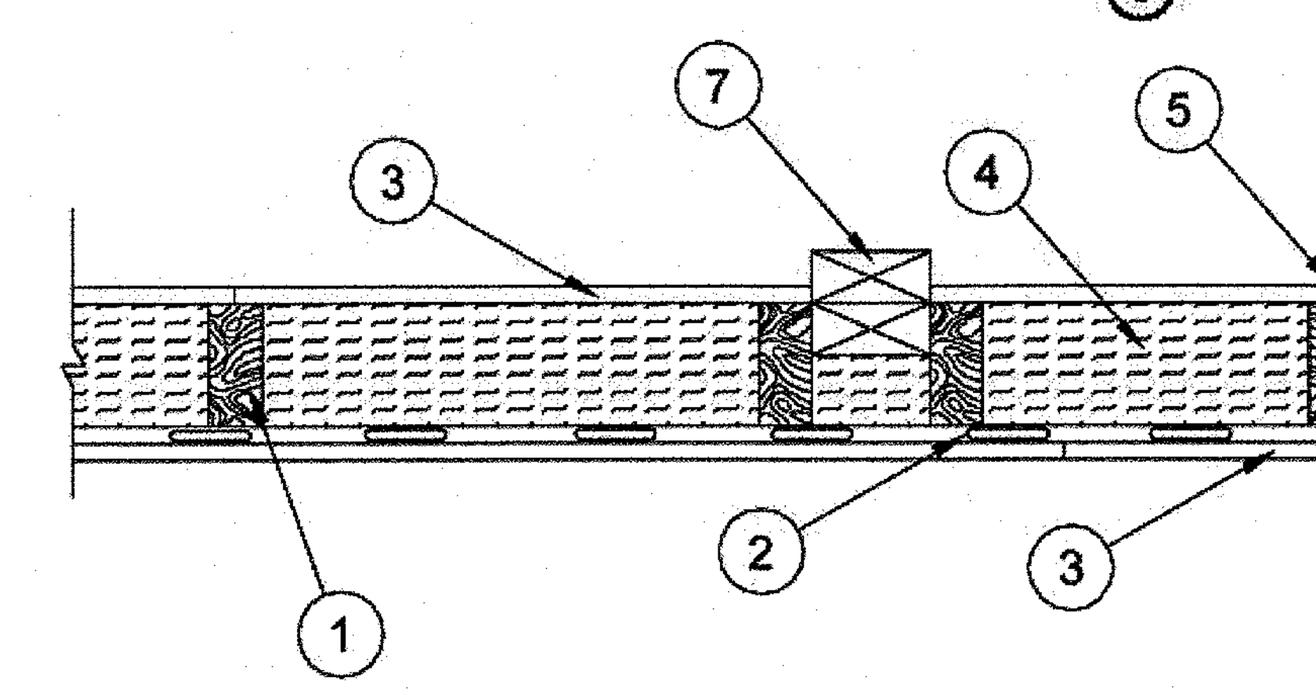

1. **Wood Studs** — Nom 2 by 4 in., spaced 16 or 24. O.C. Effectively cross braced.

2. **Furring Channel** — 25 MSG galv steel. Resilient channels spaced vertically 24 in. O.C., flange portion screw attached to one side of studs with 1-1/4 in. long diamond shaped point, double lead Phillips head steel screws.

2A. **Steel Framing Members*** — (Optional, Not Shown) — As an alternate to Item 2, furring channels and Steel Framing Members as described below:

a. **Furring Channels** — Formed of No. 25 MSG galv steel. 2-9/16 in. or 2-23/32 in. wide by 7/8 in. deep, spaced 24 in. OC perpendicular to studs. Channels secured to studs as described in Item b. Ends of adjoining channels are overlapped 6 in. and tied together with double strand of No. 18 SWG galv steel wire near each end of overlap. As an alternate, ends of adjoining channels may be overlapped 6 in. and secured together with two self-tapping #6 framing screws, min. 7/16 in. long at the midpoint of the overlap, with one screw on each flange of the channel.

b. **Steel Framing Members*** — Used to attach furring channels (Item a) to studs (Item 1). Clips spaced 48 in. OC., and secured to studs with No. 8 x 2-1/2 in. coarse drywall screw through the center grommet. Furring channels are friction fitted into clips. RSIC-1 clip for use with 2-9/16 in. wide furring channels. RSIC-1 (2.75) clip for use with 2-23/32 in. wide furring channels.

PAC INTERNATIONAL L L C — Types RSIC-1, RSIC-1 (2.75).

2B. **Steel Framing Members*** — (Optional, Not Shown) — Furring channels and Steel Framing Members as described below

a. **Furring Channels** — Formed of No. 25 MSG galv steel. 2-3/8 in. wide by 7/8 in. deep, spaced 24 in. OC perpendicular to studs. Channels secured to studs as described in Item b. Ends of adjoining channels are overlapped 6 in. and tied together with double strand of No. 18 SWG galv steel wire near each end of overlap. As an alternate, ends of adjoining channels may be overlapped 6 in. and secured together with two self-tapping #6 framing screws, min. 7/16 in. long at the midpoint of the overlap, with one screw on each flange of the channel. Gypsum board attached to furring channels as described in Item 3.

b. **Steel Framing Members*** — Used to attach furring channels (Item a) to studs. Clips spaced 48 in. OC. Genie clips secured to studs with No. 8 x 1-1/2 in. coarse drywall screw through the center hole. Furring channels are friction fitted into clips.

PLITEQ INC — Type Genie Clip

2C. **Steel Framing Members*** — (Optional, Not Shown) — Furring channels and Steel Framing Members as described below:

a. **Furring Channels** — Formed of No. 25 MSG galv steel. Spaced 24 in. OC perpendicular to studs. Channels secured to studs as described in Item b. Ends of adjoining channels overlapped 6 in. and tied together with double strand of No. 18 AWG galvanized steel wire.Gypsum board attached to furring channels as described in Item 3.

b. **Steel Framing Members*** — Used to attach furring channels (Item 2Ca) to studs. Clips spaced 48 in. OC., and secured to studs with 2 in. coarse drywall screw with 1 in. diam washer through the center hole. Furring channels are friction fitted into clips.

STUDCO BUILDING SYSTEMS — RESILMOUNT Sound Isolation Clips - Type A237R

2D. **Steel Framing Members*** — (Optional, Not Shown) — Furring channels and Steel Framing Members as described below:

a. **Furring Channels** — Formed of No. 25 MSG galv steel. Spaced 24 in. OC perpendicular to studs. Channels secured to studs as described in Item 2Db. Ends of adjoining channels overlapped 6 in. and and tied together with double strand of No. 18 AWG galvanized steel wire.Gypsum board attached to furring channels as described in Item 3.

b. **Steel Framing Members*** — Used to attach furring channels (Item 2Da) to studs. Clips spaced 48 in. OC., and secured to studs with No. 8 x 2-1/2 in. coarse drywall screw through the center hole. Furring channels are friction fitted into clips.

REGUPOL AMERICA — Type SonusClip

2E. **Steel Framing Members*** — (Optional, Not Shown) — Resilient channels and Steel Framing Members as described below:
a. **Resilient Channels** — Formed of No. 25 MSG galv steel, spaced 24 in. OC, and perpendicular to studs. Channels secured to studs as described in Item b. Ends of adjoining channels overlapped 6 in. and secured in place with two No. 8 15 x 1/2 in. Philips Modified Truss screws spaced 2-1/2 in. from the center of the overlap. Gypsum board attached to resilient channels as described in Item 3.
b. **Steel Framing Members*** — Used to attach resilient channels (Item 2Ea) to studs. Clips spaced 48 in. OC., and secured to studs with No. 8 x 2-1/2 in. coarse drywall screw through the center hole. Resilient channels are secured to clips with one No. 10 x 1/2 in. pan-head self-drilling screw.
KEENE BUILDING PRODUCTS CO INC — Type RC+ Assurance Clip

3. **Gypsum Board*** — 5/8 in. thick, 4 ft wide. Screw attached one side to furring channels with 1 in. long, self-drilling, self-tapping steel screws spaced 12 in. O.C., vertical joints located midway between studs and back blocked with furring channels, attached with 1 in. long, self-drilling, self-tapping screws, spaced 12 in. O.C., along each edge. Wallboard attached other side to studs with 1-1/4 in. long diamond shaped point, double lead Phillips head steel screws spaced 12 in. O.C., vertical joints located over studs.
CERTAINTEED GYPSUM INC — Type FRPC or Type C, Type X-2
THAI GYPSUM PRODUCTS PCL — Type C

4. **Mineral Wool Batts*** — 3 in. thick sheets, supplied in 15 and 24-in. widths, placed to fill interior of wall, attached to the 4-in. face of the studs with staples placed 24 in. O.C.
See **Batts and Blankets** (BZXX) category for names of manufacturers.

4A. **Fiber, Sprayed*** — As an alternate to Mineral Wool Batts (Item 4) — Spray applied cellulose material. The fiber is applied with water to completely fill the enclosed cavity in accordance with the application instructions supplied with the product with a nominal dry density of 2.7 lb/ft3. Alternate Application Method: The fiber is applied without water or adhesive at a nominal dry density of 3.5 lb/ft3, in accordance with the application instructions supplied with the product. When Item 2A Fiber, Sprayed shall be INS735, INS745, INS765LD or INS770LD.
U S GREENFIBER L L C — INS735& INS745 for use with wet or dry application. INS510LD, INS515LD, INS541LD, INS735, INS745, INS765LD, and INS770LD are to be used for dry application only.

4B. **Fiber, Sprayed*** — As an alternate to Batts and Blankets (Item 4) — Spray applied cellulose fiber. The fiber is applied with water to completely fill the enclosed cavity in accordance with the application instructions supplied with the product. The minimum dry density shall be 4.30 lbs/ft^3.

INTERNATIONAL CELLULOSE CORP — Celbar-RL

5. **Joints and Screw heads** — Gypsum board joints covered with paper tape and joint compound. Screw heads covered with joint compound. As an alternate, nom 3/32 in. thick gypsum veneer plaster may be applied to the entire surface of Classified veneer baseboard with joints reinforced with paper tape.

6. **Wall and Partition Facings and Accessories*** — (Optional, Not Shown) — Nominal 1/2 in. thick, 4 ft wide panels, for optional use as an additional layer on one or both sides of the assembly. Panels attached in accordance with manufacturer's recommendations. When the QR-500 or QR-510 panel is installed between the wood framing and the UL Classified gypsum board, the required UL Classified gypsum board layer(s) is/are to be installed as indicated as to fastener type and spacing, except that the required fastener length shall be increased by a minimum of 1/2 in. Not evaluated or intended as a substitute for the required layer(s) of UL Classified Gypsum Board.
PABCO BUILDING PRODUCTS L L C, DBA PABCO GYPSUM — Type QuietRock QR-500 and QR-510

7. **Non-Bearing Wall Partition Intersection** — (Optional) — Two nominal 2 by 4 in. stud or nominal 2 by 6 in. stud nailed together with two 3in. long 10d nails spaced a max. 16 in. OC. vertically and fastened to one side of the minimum 2 by 4 in. stud with 3 in. long 10d nails spaced a max 16 in. OC. vertically. Intersection between partition wood studs to be flush with the 2 by 4 in. studs. The wall partition wood studs are to be framed by with a second 2 by 4 in. wood stud fastened with 3 in. long 10d nails spaced a max. 16 in. OC. vertically. Maximum one non-bearing wall partition intersection per stud cavity. Non-bearing wall partition stud depth shall be at a minimum equal to the depth of the bearing wall.

*** Indicates such products shall bear the UL or cUL Certification Mark for jurisdictions employing the UL or cUL Certification (such as Canada), respectively.**

Last Updated on 2014-09-27

H5 **UL U331**
NTS

LAKE COUNTY BUILDING SERVICES
Any errors or omissions in these plans shall be made to conform with the applicable code requirements per Florida Building Code, in accordance with Section 107. Plans were reviewed for code compliance and shall be kept on job site.

RECEIVED FEB 14 2019

PERMIT REVIEW STAMP

ISSUE HISTORY

No.	Date	Description
1	02/08/2019	ISSUE FOR PERMIT

REVISION HISTORY

No.	Date	Description

FUGLEBERG KOCH
2555 Temple Trail, Winter Park, FL 32789 (407) 629-0595
www. fuglebergkoch.com AA26002103

CONSULTANT

MICHAEL E. GOVE
FLORIDA LICENSE # AR94111
STATE OF FLORIDA · MICHAEL E. GOVE · AR94111 · REGISTERED ARCHITECT
02/08/2019

SUMMER BAY APTS. II	Drawn: Author
LAKE COUNTY, FL	Checked: Checker
	Approval: Approver
	Date: Issue Date
	Project #: 5389

UL REFERENCE DIRECTORY - WALL SYSTEMS

A0.32

PLOTTED: 2/11/2019 2:28:48 PM

© 2017 These documents and their contents are the property of FUGLEBERG KOCH - AA26002103, and are issued only for the specific project noted on these drawings. Any reproductions, revisions, or modifications of these documents without the expressed written consent of Fugleberg Koch, is prohibited by law.

Design No. L574

November 17, 2017

Unrestrained Assembly Rating — 1 Hr.

Finish Rating — 24 or 25 Min (See Items 5, 5A and 5B)

This design was evaluated using a load design method other than the Limit States Design Method (e.g., Working Stress Design Method). For jurisdictions employing the Limit States Design Method, such as Canada, a load restriction factor shall be used — See Guide BXUV or BXUV7

*** Indicates such products shall bear the UL or cUL Certification Mark for jurisdictions employing the UL or cUL Certification (such as Canada), respectively.**

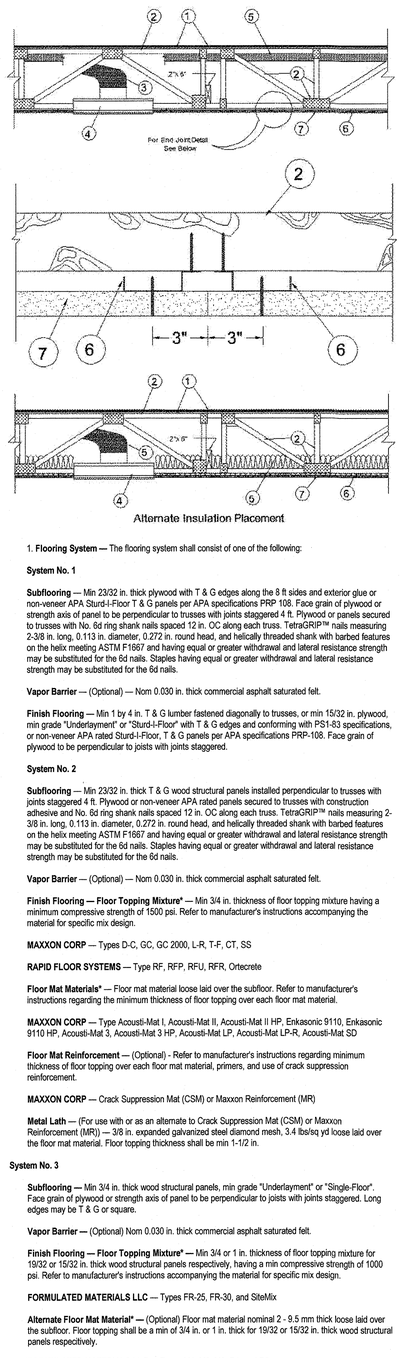

Alternate Insulation Placement

1. **Flooring System —** The flooring system shall consist of one of the following:

System No. 1

Subflooring — Min 23/32 in. thick plywood with T & G edges along the ⌀ ft sides and exterior glue or non-veneer APA Sturd-I-Floor T & G panels per APA specifications PRP 108. Face grain of plywood or strength axis of panel to be perpendicular to trusses with joints staggered 4 ft. Plywood or panels secured to trusses with No. 6d ring shank nails spaced 12 in. OC along each truss. TetraGRIP™ nails measuring 2-3/8 in. long, 0.113 in. diameter, 0.272 in. round head, and helically threaded shank with barbed features on the helix meeting ASTM F1667 and having equal or greater withdrawal and lateral resistance strength may be substituted for the 6d nails. Staples having equal or greater withdrawal and lateral resistance strength may be substituted for the 6d nails.

Vapor Barrier — (Optional) — Nom 0.030 in. thick commercial asphalt saturated felt.

Finish Flooring — Min 1 by 4 in. T & G lumber fastened diagonally to trusses, or min 15/32 in. plywood, min grade "Underlayment" or "Sturd-I-Floor" with T & G edges and conforming with PS1-83 specifications, or non-veneer APA rated Sturd-I-Floor, T & G panels per APA specifications PRP-108. Face grain of plywood to be perpendicular to joists with joints staggered.

System No. 2

Subflooring — Min 23/32 in. thick T & G wood structural panels installed perpendicular to trusses with joints staggered 4 ft. Plywood or non-veneer APA rated panels secured to trusses with construction adhesive and No. 6d ring shank nails spaced 12 in. OC along each truss. TetraGRIP™ nails measuring 2-3/8 in. long, 0.113 in. diameter, 0.272 in. round head, and helically threaded shank with barbed features on the helix meeting ASTM F1667 and having equal or greater withdrawal and lateral resistance strength may be substituted for the 6d nails. Staples having equal or greater withdrawal and lateral resistance strength may be substituted for the 6d nails.

Vapor Barrier — (Optional) — Nom 0.030 in. thick commercial asphalt saturated felt.

Finish Flooring — Floor Topping Mixture* — Min 3/4 in. thickness of floor topping mixture having a minimum compressive strength of 1500 psi. Refer to manufacturer's instructions accompanying the material for specific mix design

MAXXON CORP — Types D-C, GC, GC 2000, L-R, T-F, CT, SS

RAPID FLOOR SYSTEMS — Type RF, RFP, RFU, RFR, Ortecrete

Floor Mat Materials* — Floor mat material loose laid over the subfloor. Refer to manufacturer's instructions regarding the minimum thickness of floor topping over each floor mat material.

MAXXON CORP — Type Acousti-Mat I, Acousti-Mat II, Acousti-Mat II HP, Enkasonic 9110, Enkasonic 9110 HP, Acousti-Mat 3, Acousti-Mat 3 HP, Acousti-Mat LP, Acousti-Mat LP-R, Acousti-Mat SD

Floor Mat Reinforcement — (Optional) - Refer to manufacturer's instructions regarding minimum thickness of floor topping over each floor mat material, primers, and use of crack suppression reinforcement.

MAXXON CORP — Crack Suppression Mat (CSM) or Maxxon Reinforcement (MR)

Metal Lath — (For use with or as an alternate to Crack Suppression Mat (CSM) or Maxxon Reinforcement (MR)) — 3/8 in. expanded galvanized steel diamond mesh, 3.4 lbs/sq yd loose laid over the floor mat material. Floor topping thickness shall be min 1-1/2 in.

System No. 3

Subflooring — Min 3/4 in. thick wood structural panels, min grade "Underlayment" or "Single-Floor". Face grain of plywood or strength axis of panel to be perpendicular to joists with joints staggered. Long edges may be T & G or square.

Vapor Barrier — (Optional) Nom 0.030 in. thick commercial asphalt saturated felt.

Finish Flooring — Floor Topping Mixture* — Min 3/4 or 1 in. thickness of floor topping mixture for 19/32 or 15/32 in. thick wood structural panels respectively, having a min compressive strength of 1000 psi. Refer to manufacturer's instructions accompanying the material for specific mix design.

FORMULATED MATERIALS LLC — Types FR-25, FR-30, and SiteMix

Alternate Floor Mat Material* — (Optional) Floor mat material nominal 2 - 9.5 mm thick loose laid over the subfloor. Floor topping shall be a min of 3/4 in. or 1 in. thick for 19/32 or 15/32 in. thick wood structural panels respectively.

FORMULATED MATERIALS LLC — Types M1, M2, M3, R1, and R2

System No. 4

Subflooring — Min 23/32 in. thick plywood with T & G edges along the ⌀ ft sides and exterior glue or non-veneer APA Sturd-I-Floor T & G panels per APA specifications PRP 108. Face grain of plywood or strength axis of panel to be perpendicular to trusses with joints staggered 4 ft. Plywood or panels secured to trusses with No. 6d ring shank nails spaced 12 in. OC along each truss. TetraGRIP™ nails measuring 2-3/8 in. long, 0.113 in. diameter, 0.272 in. round head, and helically threaded shank with barbed features on the helix meeting ASTM F1667 and having equal or greater withdrawal and lateral resistance strength may be substituted for the 6d nails. Staples having equal or greater withdrawal and lateral resistance strength may be substituted for the 6d nails.

Vapor Barrier — (Optional) — Nom 0.010 in. thick commercial asphalt saturated felt.

Finish Flooring — Floor Topping Mixture* — Min 3/4 in. thickness of floor topping mixture having a minimum compressive strength of 1800 psi. Refer to manufacturer's instructions accompanying the material for specific mix design

UNITED STATES GYPSUM CO — Types LRK, HSLRK, CSD

USG MEXICO S A DE C V — Types LRK, HSLRK, CSD

Floor Mat Materials* — (Optional) — Floor mat material loose laid over the subfloor. Refer to manufacturer's instructions regarding the minimum thickness of floor topping over each floor mat material.

UNITED STATES GYPSUM CO — Types SAM, LEVELROCK® Brand Sound Reduction Board, LEVELROCK® Brand Floor Underlayment SRM-25

Alternate Floor Mat Materials* — (Optional) — Nom 3/8 in. thick floor mat material loose laid over the subfloor.

GRASSWORX L L C — Type SC50

System No. 5

Subflooring — Min 3/4 in. thick wood structural panels, min grade "Underlayment" or "Single-Floor". Face grain of plywood or strength axis of panel to be perpendicular to joists with joints staggered. Long edges may be T & G or square.

Vapor Barrier — (Optional) — Nom 0.030 in. thick commercial asphalt saturated felt.

Finish Flooring — Floor Topping Mixture* — Min 3/4 or 1 in. thickness of floor topping mixture for 19/32 or 15/32 in. thick wood structural panels respectively, having a min compressive strength of 1000 psi. Refer to manufacturer's instructions accompanying the material for specific mix design.

ALLIED CUSTOM GYPSUM — AccuCrete types NexGen, Green, Prime, B, M, and PrePour, AccuRadiant, AccuLevel types G40, G50 and SD30.

Alternate Floor Mat Material* — (Optional) — Floor mat material nominal 2 - 9.5 mm thick loose laid over the subfloor. Floor topping shall be a min of 3/4 in. or 1 in. thick for 19/32 or 15/32 in. thick wood structural panels respectively.

ALLIED CUSTOM GYPSUM — AccuQuiet types P80, C40, D13, D-18, D25, DX38, EM.125, EM.125S, EM.250, EM.250S, EM.375, EM.375S, EM.750, and EM.750S.

System No. 6

Subflooring — Min 23/32 in. thick wood structural panels, min grade "C-D" or "Sheathing". Face grain of plywood or strength axis of panels to be perpendicular to the joists with joints staggered.

Vapor Barrier — (Optional) — Commercial asphalt saturated felt, 0.030 in. thick.

Vapor Barrier — (Optional) — Nom 0.010 in. thick commercial rosin-sized building paper.

Finish Flooring* — Min 3/4 in. thickness of any Floor Topping Mixture bearing the UL Classification Marking as to Fire Resistance. See **Floor- and Roof-Topping Mixtures** (CCOX) category for names of Classified Companies.

Floor Mat Materials* — (Optional) — Nom. 1/4 in. thick loose laid over the subfloor. Floor topping thickness shall be a minimum of 3/4 in.

KEENE BUILDING PRODUCTS CO INC — Type Quiet Qurl 55/025 and Quiet Qurl 55/025 N
Alternate Floor Mat Materials* — (Optional) — Floor mat material Nom. 3/8 in. thick loose laid over the subfloor. Floor topping thickness shall be a minimum of 1 in.

KEENE BUILDING PRODUCTS CO INC — Type Quiet Qurl 60/040 and Quiet Qurl 60/040 N

Alternate Floor Mat Materials* — (Optional) — Floor mat material Nom. 3/4 in. thick loose laid over the subfloor. Floor topping thickness shall be a minimum of 1-1/2 in.

KEENE BUILDING PRODUCTS CO INC — Type Quiet Qurl 65/075, Quiet Qurl 65/075 N

Alternate Floor Mat Materials* — (Optional) — Floor mat material Nom. 1/8 in. thick loose laid over the subfloor. Floor topping thickness shall be a minimum of 3/4 in.

KEENE BUILDING PRODUCTS CO INC — Type Quiet Qurl 52/013 and Quiet Qurl 52/013 N

Alternate Floor Mat Materials* — (Optional) — Floor mat material Nom. 1/4 in. entangled net core with a compressible fabric attached to the bottom loose laid over the subfloor. Floor topping thickness shall be a minimum of 1 in.

KEENE BUILDING PRODUCTS CO INC — Quiet Qurl 55/025 MT and Quiet Qurl 55/025 N MT

System No. 7

Min 23/32 in. thick plywood with T & G edges along the ⌀ ft sides and exterior glue or non-veneer APA Sturd-I-Floor T & G panels per APA specifications PRP 108. Face grain of plywood or strength axis of panel to be perpendicular to trusses with joints staggered 4 ft. Plywood or panels secured to trusses with No. 6d ring shank nails spaced 12 in. OC along each truss. TetraGRIP™ nails measuring 2-3/8 in. long, 0.113 in. diameter, 0.272 in. round head, and helically threaded shank with barbed features on the helix meeting ASTM F1667 and having equal or greater withdrawal and lateral resistance strength may be substituted for the 6d nails. Staples having equal or greater withdrawal and lateral resistance strength may be substituted for the 6d nails.

Finish Flooring — Floor Topping Mixture* — Min 3/4 in. thickness of floor topping mixture having a min compressive strength of 1100 psi. Mixture shall consist of 6.8 gal of water to 80 lbs of floor topping mixture to 1.9 cu ft of sand.

HACKER INDUSTRIES INC — Firm-Fill Gypsum Concrete, Firm-Fill 2010, Firm-Fill 3310, Firm-Fill 4010, Firm-Fill High Strength and Gyp-Span Radiant

Metal Lath— (Optional) — For use with 3/8 in. (10 mm) floor mat materials, 3/8 in. expanded steel diamond mesh, 3.4 lbs/sq yd placed over the floor mat material. Hacker Floor Primer to be applied prior to the placement of the metal lath. When metal lath is used, floor topping thickness a nom 1-1/4 in. over the floor mat.

Floor Mat Materials* — (Optional) — Floor mat material nom 5/64 in. (2 mm) thick adhered to subfloor with Hacker Floor Primer. Primer to be applied to the surface of the mat prior to the placement of a min 1 in. of floor-topping mixture.

ECORE INTERNATIONAL INC — Type QTscu 4002

HACKER INDUSTRIES INC — Type Hacker Sound-Mat

Alternate Floor Mat Materials — (Optional) — Floor mat material nom 1/4 in. (6 mm) thick adhered to subfloor with Hacker Floor Primer. Primer to be applied to the surface of the mat prior to the placement of a min 1-1/4 in. (32 mm) of floor-topping mixture.

ECORE INTERNATIONAL INC — Type QTrbm 3006-3

HACKER INDUSTRIES INC — Type Hacker Sound-Mat II.

Alternate Floor Mat Materials — (Optional) — Floor mat material nom 1/8 in. (3 mm) thick loose laid over the subfloor. Floor topping thickness shall be a min of 3/4 in. (19 mm).

HACKER INDUSTRIES INC — FIRM-FILL SCM 125

Alternate Floor Mat Materials — (Optional) — Floor mat material nom 1/4 in. (6 mm) thick loose laid over the subfloor. Floor topping thickness shall be a min of 1 in. (25 mm).

HACKER INDUSTRIES INC — Type FIRM-FILL SCM 250, Quiet Qurl 55/025

Alternate Floor Mat Materials — (Optional) — Floor mat material nom 3/8 in. (10 mm) thick loose laid over the subfloor. Floor topping thickness shall be a min of 1-1/4 in. (32 mm).

HACKER INDUSTRIES INC — FIRM-FILL SCM 400, Quiet Qurl 60/040

Alternate Floor Mat Materials — (Optional) — Floor mat material nom 3/4 in. (19 mm) thick loose laid over the subfloor. Floor topping thickness shall be a min of 1-1/2 in. (38 mm).

HACKER INDUSTRIES INC — Type FIRM-FILL SCM 750, Quiet Qurl 65/075

System No. 8

Subflooring — Min 3/4 in. thick wood structural panels, min grade "Underlayment" or "Single-Floor". Face grain of plywood or strength axis of panel to be perpendicular to joists with joints staggered. Long edges may be T & G or square.

Vapor Barrier — (Optional) — Nom 0.030 in. thick commercial asphalt saturated felt.

Finish Flooring — Floor Topping Mixture* — Min 3/4 or 1 in. thickness of floor topping mixture for 19/32 or 15/32 in. thick wood structural panels respectively, having a min compressive strength of 1000 psi. Refer to manufacturer's instructions accompanying the material for specific mix design.

DEPENDABLE LLC — GSL M3.4, GSL K2.6, GSL-CSD and GSL RH.

Floor Mat Materials* — (Optional) — Nom. 1/4 in. thick loose laid over the subfloor. Floor topping thickness shall be a minimum of 3/4 in.

KEENE BUILDING PRODUCTS CO INC — Type Quiet Qurl 55/025 and Quiet Qurl 55/025 N

Alternate Floor Mat Materials* — (Optional) — Floor mat material Nom. 3/8 in. thick loose laid over the subfloor. Floor topping thickness shall be a minimum of 1 in.

KEENE BUILDING PRODUCTS CO INC — Type Quiet Qurl 60/040 and Quiet Qurl 60/040 N

Alternate Floor Mat Materials* — (Optional) — Floor mat material Nom. 3/4 in. thick loose laid over the subfloor. Floor topping thickness shall be a minimum of 1-1/2 in.

KEENE BUILDING PRODUCTS CO INC — Type Quiet Qurl 65/075, Quiet Qurl 65/075 N

Alternate Floor Mat Materials* — (Optional) — Floor mat material Nom. 1/8 in. thick loose laid over the subfloor. Floor topping thickness shall be a minimum of 3/4 in.

KEENE BUILDING PRODUCTS CO INC — Type Quiet Qurl 52/013 and Quiet Qurl 52/013 N

Alternate Floor Mat Materials* — (Optional) — Floor mat material Nom. 1/4 in. entangled net core with a compressible fabric attached to the bottom loose laid over the subfloor. Floor topping thickness shall be a minimum of 1 in.

KEENE BUILDING PRODUCTS CO INC — Quiet Qurl 55/025 MT and Quiet Qurl 55/025 N MT

2. **Trusses —** Parallel chord trusses, spaced a max of 24 in. OC, fabricated from nom 2 by 4 lumber, with lumber oriented vertically or horizontally. Min truss depth is 18 in. when **Ceiling Dampers*** are used. Truss depth may be reduced to 12 in. when **Ceiling Dampers*** are not used. Truss members secured together with min 0.0356 in. thick galvanized steel plates. Plates have 5/16 in. long teeth projecting perpendicular to the plane of the plate. The teeth are in pairs facing each other (made by the same punch), forming a split tooth type plate. Each tool has a chisel point on its outside edge. These points are diagonally opposite each other for each pair. The top half of each tooth has a twist for stiffness. The pairs are repeated on approx. 7/8 in. centers with four rows of teeth per inch of plate width.

3. **Air Duct*** — Any UL Class 0 or Class 1 flexible air duct installed in accordance with the instructions provided by the damper manufacturer.

4. **Ceiling Damper*** — For use with min 18 in. deep trusses. Nom 20 in. long by 18 in. wide by 2-1/8 in. high, fabricated from galvanized steel. Plenum box max size nom 21 in. long by 18 in. wide by 16 in. high fabricated from either galvanized steel or Classified Air Duct Materials bearing the UL Classification Marking for Class 0 or Class 1 rigid air duct material. Installed in accordance with the instructions provided by the manufacturer. Max damper openings not to exceed 180 sq in. per 100 sq ft of ceiling area.

NAILOR INDUSTRIES INC — Types 0755, 0755A, 0756, 0756D, 0757, 0757D, 0757FP, 0757DFP, 0758, 0759, 0760, 0761, 0762, CRD5, CRD5D, CRD6, CRD6D, CRD6FP, CRD6DFP

4A. **Alternate Ceiling Damper* —** For use with min 18 in. deep trusses. Max plenum box size nom 19 in. long by 19 in. wide and 11-7/8 in. high fabricated from galv steel. Aggregate damper openings shall not exceed 128 sq in. per 100 sq ft of ceiling area. Damper installed in accordance with the manufacturers installation instructions provided with the damper.

AIRE TECHNOLOGIES INC — Models: CRD model 50 w/Boot, CRD model 50EA w/Boot, CRD model 55 w/Boot, CRD model 55 EA w/Boot.

LLOYD INDUSTRIES INC — Model CRD 50-BT, CRD 50-EA-BT, CRD 55-BT, CRD 55 EA-BT

4B. **Alternate Ceiling Damper* —** For use with min 18 in. deep trusses. Max plenum box size nom 13 in. long by 13 in. wide and 11-7/8 in. high fabricated from galv steel. Aggregate damper openings shall not exceed 50 sq in. per 100 sq ft of ceiling area. Damper installed in accordance with the manufacturers installation instructions provided with the damper.

LLOYD INDUSTRIES INC — Model CRD 50-BT-6, CRD 50-EA-BT-6, CRD 55-BT-6, CRD 55 EA-BT-6, CRD50-ᴹ X-BT-6

4C. **Alternate Ceiling Damper* —** For use with min 18 in. deep trusses. Max size ceiling outlet in plenum box nom 12 in. long by 12 in. wide. Plenum box fabricated from galv steel. Aggregate damper openings shall not exceed 72 sq in. per 100 sq ft of ceiling area. Installed in accordance with the manufacturers installation instructions provided with the damper.

AIRE TECHNOLOGIES INC — Models: CRD model 50 w/Boot, CRD model 50EA w/Boot, CRD model 55 w/Boot, CRD model 55 EA w/Boot

LLOYD INDUSTRIES INC — Model CRD 50-95BT, CRD 50-EA-95BT, CRD 55-95BT, CRD 55 EA-95BT

4D. **Alternate Ceiling Damper* —** For use with min 18 in. deep trusses. Max size ceiling outlet in plenum box nom 16 in. long by 16 in. wide. Aggregate damper openings shall not exceed 128 sq in. per 100 sq ft of ceiling area. Damper installed in accordance with the manufacturers installation instructions provided with the damper.

LLOYD INDUSTRIES INC — Models CRD 50- FGPB-4.2, - 4.2 NI, -6.0, -6.0 NI; CRD50-EA-FGPB-4.2, - 4.2 NI, -6.0, -6.0 NI

4E. **Alternate Ceiling Damper* —** For use with min 18 in. deep trusses. Max plenum box size nom 15 in. long by 15 in. wide and 11-7/8 in. high fabricated from galv steel. Aggregate damper openings shall not exceed 72 sq in. per 100 sq ft of ceiling area. Damper installed in accordance with the manufacturers installation instructions provided with the damper.

LLOYD INDUSTRIES INC — Models 45-CRD-LT-BT and 45-CRD-LTD-BT

4F. **Alternate Ceiling Damper* —** For use with min 18 in. deep trusses. Max size ceiling outlet in plenum box nom 10 in. long by 10 in. wide. Plenum box fabricated from galv steel. Aggregate damper openings shall not exceed 50 sq in. per 100 sq ft of ceiling area. Installed in accordance with the manufacturers installation instructions provided with the damper.

LLOYD INDUSTRIES INC — Model 45-LTD-95-BT-4

4G. **Alternate Ceiling Damper* —** For use with min 18 in. deep trusses. Max plenum box size nom 19 in. long by 15 in. wide and 11-7/8 in. high fabricated from galv steel. Aggregate damper openings shall not exceed 96 sq in. per 100 sq ft of ceiling area. Damper installed in accordance with the manufacturers installation instructions provided with the damper.

LLOYD INDUSTRIES INC — Model CRD50-ᴹ X-BT

4H **Alternate Ceiling Damper* —** For use with min 18 in. deep trusses. Max nom area shall be 324 sq in. Max square size shall be 18 in. by 18 in. Rectangular sizes not to exceed 324 sq in. with a max width of 18 in. Max height of damper shall be 14 in. Aggregate damper openings shall not exceed 162 sq in. per 100 sq ft of ceiling area. Damper installed in accordance with the manufacturers installation instructions provided with the damper. A steel grille (Item 9) shall be installed in accordance with installation instructions.

C&S AIR PRODUCTS — Model RD-521

POTTORFF — Model CFD-521.

HACKER INDUSTRIES INC — Type FIRM-FILL SCM 250, Quiet Qurl 55/025

Alternate Floor Mat Materials — (Optional) — Floor mat material nom 3/8 in. (10 mm) thick loose laid over the subfloor. Floor topping thickness shall be a min of 1-1/4 in. (32 mm).

HACKER INDUSTRIES INC — FIRM-FILL SCM 400, Quiet Qurl 60/040

Alternate Floor Mat Materials — (Optional) — Floor mat material nom 3/4 in. (19 mm) thick loose laid over the subfloor. Floor topping thickness shall be a min of 1-1/2 in. (38 mm).

HACKER INDUSTRIES INC — Type FIRM-FILL SCM 750, Quiet Qurl 65/075

System No. 8

Subflooring — Min 3/4 in. thick wood structural panels, min grade "Underlayment" or "Single-Floor". Face grain of plywood or strength axis of panel to be perpendicular to joists with joints staggered. Long edges may be T & G or square.

Vapor Barrier — (Optional) — Nom 0.030 in. thick commercial asphalt saturated felt.

Finish Flooring — Floor Topping Mixture* — Min 3/4 or 1 in. thickness of floor topping mixture for 19/32 or 15/32 in. thick wood structural panels respectively, having a min compressive strength of 1000 psi. Refer to manufacturer's instructions accompanying the material for specific mix design.

DEPENDABLE LLC — GSL M3.4, GSL K2.6, GSL-CSD and GSL RH.

Floor Mat Materials* — (Optional) — Nom. 1/4 in. thick loose laid over the subfloor. Floor topping thickness shall be a minimum of 3/4 in.

KEENE BUILDING PRODUCTS CO INC — Type Quiet Qurl 55/025 and Quiet Qurl 55/025 N

Alternate Floor Mat Materials* — (Optional) — Floor mat material Nom. 3/8 in. thick loose laid over the subfloor. Floor topping thickness shall be a minimum of 1 in.

KEENE BUILDING PRODUCTS CO INC — Type Quiet Qurl 60/040 and Quiet Qurl 60/040 N

Alternate Floor Mat Materials* — (Optional) — Floor mat material Nom. 3/4 in. thick loose laid over the subfloor. Floor topping thickness shall be a minimum of 1-1/2 in.

KEENE BUILDING PRODUCTS CO INC — Type Quiet Qurl 65/075, Quiet Qurl 65/075 N

Alternate Floor Mat Materials* — (Optional) — Floor mat material Nom. 1/8 in. thick loose laid over the subfloor. Floor topping thickness shall be a minimum of 3/4 in.

KEENE BUILDING PRODUCTS CO INC — Type Quiet Qurl 52/013 and Quiet Qurl 52/013 N

Alternate Floor Mat Materials* — (Optional) — Floor mat material Nom. 1/4 in. entangled net core with a compressible fabric attached to the bottom loose laid over the subfloor. Floor topping thickness shall be a minimum of 1 in.

KEENE BUILDING PRODUCTS CO INC — Quiet Qurl 55/025 MT and Quiet Qurl 55/025 N MT

System No. 7

Min 23/32 in. thick plywood with T & G edges along the ⌀ ft sides and exterior glue or non-veneer APA Sturd-I-Floor T & G panels per APA specifications PRP 108. Face grain of plywood or strength axis of panel to be perpendicular to trusses with joints staggered 4 ft. Plywood or panels secured to trusses with No. 6d ring shank nails spaced 12 in. OC along each truss. TetraGRIP™ nails measuring 2-3/8 in. long, 0.113 in. diameter, 0.272 in. round head, and helically threaded shank with barbed features on the helix meeting ASTM F1667 and having equal or greater withdrawal and lateral resistance strength may be substituted for the 6d nails. Staples having equal or greater withdrawal and lateral resistance strength may be substituted for the 6d nails.

Finish Flooring — Floor Topping Mixture* — Min 3/4 in. thickness of floor topping mixture having a min compressive strength of 1100 psi. Mixture shall consist of 6.8 gal of water to 80 lbs of floor topping mixture to 1.9 cu ft of sand.

HACKER INDUSTRIES INC — Firm-Fill Gypsum Concrete, Firm-Fill 2010, Firm-Fill 3310, Firm-Fill 4010, Firm-Fill High Strength and Gyp-Span Radiant

Metal Lath— (Optional) — For use with 3/8 in. (10 mm) floor mat materials, 3/8 in. expanded steel diamond mesh, 3.4 lbs/sq yd placed over the floor mat material. Hacker Floor Primer to be applied prior to the placement of the metal lath. When metal lath is used, floor topping thickness a nom 1-1/4 in. over the floor mat.

Floor Mat Materials* — (Optional) — Floor mat material nom 5/64 in. (2 mm) thick adhered to subfloor with Hacker Floor Primer. Primer to be applied to the surface of the mat prior to the placement of a min 1 in. of floor-topping mixture.

ECORE INTERNATIONAL INC — Type QTscu 4002

HACKER INDUSTRIES INC — Type Hacker Sound-Mat

Alternate Floor Mat Materials — (Optional) — Floor mat material nom 1/4 in. (6 mm) thick adhered to subfloor with Hacker Floor Primer. Primer to be applied to the surface of the mat prior to the placement of a min 1-1/4 in. (32 mm) of floor-topping mixture.

ECORE INTERNATIONAL INC — Type QTrbm 3006-3

HACKER INDUSTRIES INC — Type Hacker Sound-Mat II.

Alternate Floor Mat Materials — (Optional) — Floor mat material nom 1/8 in. (3 mm) thick loose laid over the subfloor. Floor topping thickness shall be a min of 3/4 in. (19 mm).

HACKER INDUSTRIES INC — FIRM-FILL SCM 125

Alternate Floor Mat Materials — (Optional) — Floor mat material nom 1/4 in. (6 mm) thick loose laid over the subfloor. Floor topping thickness shall be a min of 1 in. (25 mm).

4I. **Alternate Ceiling Damper* —** For use with min 18 in. deep trusses. Max nom area shall be 196 sq in. Max square size shall be 14 in. by 14 in. Rectangular sizes not to exceed 196 sq in. with a max width of 26 in. Max height of damper shall be 7 in. Aggregate damper openings shall not exceed 98 sq in. per 100 sq ft of ceiling area. Damper installed in accordance with the manufacturers installation instructions provided with the damper. A steel grille (Item 9) not to exceed 144 in.² shall be installed in accordance with installation instructions.

POTTORFF — Model CFD-521-BT

4J. **Alternate Ceiling Damper* —** For use with min 18 in. deep trusses. Max nom area shall be 256 sq in. with the length not to exceed 24 in. and the width not to exceed 20 in. Max height of damper shall be 17 in. Aggregate damper openings shall not exceed 128 sq in. per 100 sq ft of ceiling area. Damper installed in accordance with the manufacturers installation instructions provided with the damper. A steel grille (Item 9) shall be installed in accordance with installation instructions.

POTTORFF — Models CFD-521-IP, CFD-521-NP

4K. **Alternate Ceiling Damper* —** For use with min 18 in. deep trusses. Max nom area shall be 324 sq in. Max square size shall be 18 in. by 18 in. Rectangular sizes not to exceed 324 sq in. with a max width and max length of 18 in. Max round size shall be 18 in. dia. Aggregate damper openings shall not exceed 162 sq in. per 100 sq ft of ceiling area. Damper installed in accordance with the manufacturers installation instructions provided with the damper.

RUSKIN COMPANY — Models CFD7-T, CFDR7-T

4L. **Alternate Ceiling Damper* —** Ceiling damper & fan assembly for use with min 18 in. deep trusses. Max nom area shall be 75 sq in. with the length not to exceed 8-9/16 in. and the width not to exceed 8-3/4 in. Max height of damper shall be 9-7/8 in. Aggregate damper openings shall not exceed 38 sq in. per 100 sq ft of ceiling area. Damper shall be installed in combination with one of the fan models described in, and in accordance with, the manufacturers installation instructions provided with the damper. A plastic grille shall be installed in accordance with installation instructions.

DELTA ELECTRONICS INC — Models CRD2, GBR-CRD, ITG-CRD

4M. **Alternate Ceiling Damper* —** For use with min 18 in. deep trusses. Max nom area shall be 324 sq in. Max square size shall be 18 in. by 18 in. Rectangular sizes not to exceed 324 sq in. with a max length of 20 in. and a max width of 22 in. Max height of damper shall be 14 in. Aggregate damper openings shall not exceed 154 sq in. per 100 sq ft of ceiling area. Damper installed in accordance with the manufacturer's installation instructions provided with the damper. An aluminum or steel grille shall be installed in accordance with installation instructions.

UNITED ENERTECH CORP — Type C-S/R-WT or C-S/R-WTP (Max nom area 324 sq. in.) or C-S/R-WTS or C-S/R-WTPS (Max nom area 162 sq. in.)

4N. **Alternate Ceiling Damper* —** Ceiling damper & fan assembly for use with min 18 in. deep trusses. Max nom area shall be 75 sq in. with the length not to exceed 9-1/4 in. and the width not to exceed 9-3/4 in. Max height of damper shall be 9-7/8 in. Aggregate damper openings shall not exceed 45 sq in. per 100 sq ft of ceiling area. Damper shall be installed in combination with one of the fan models described in, and in accordance with, the manufacturer's installation instructions provided with the damper. A plastic grille (Item 9) shall be installed in accordance with installation instructions.

DELTA ELECTRONICS INC — Model SIG-CRD

4O. **Alternate Ceiling Damper* —** Ceiling damper & fan assembly for use with min 18 in. deep trusses. Max nom area shall be 103 sq in. with the length not to exceed 10-1/8 in. and the width not to exceed 10-1/8 in. Aggregate damper openings shall not exceed 52 sq in. per 100 sq ft of ceiling area. Damper shall be installed in combination with one of the fan models described in, and in accordance with, the manufacturer's installation instructions provided with the damper. A plastic grille (Item 9) shall be installed in accordance with installation instructions.

PANASONIC CORPORATION, PANASONIC CORPORATION OF NORTH AMERICA — Model PC-RD05C5

4P. **Alternate Ceiling Damper* —** Ceiling damper & fan assembly for use with min 18 in. deep trusses. Max nom area shall be 113 sq in. with the length not to exceed 10-1/8 in. and the width not to exceed 11-1/8 in. Aggregate damper openings shall not exceed 57 sq in. per 100 sq ft of ceiling area. Damper shall be installed in combination with one of the fan models described in, and in accordance with, the manufacturer's installation instructions provided with the damper. A plastic grille (Item 9) shall be installed in accordance with installation instructions.

BROAN-NUTONE L L C — Model RDFUWT

4Q. **Alternate Ceiling Damper* —** Ceiling damper & fan assembly for use with min 18 in. deep trusses. Max nom area shall be 79 sq in. with the length not to exceed 10 in. and the width not to exceed 7-15/16 in. Aggregate damper openings shall not exceed 40 sq in. per 100 sq ft of ceiling area. Damper shall be installed in combination with one of the fan models described in, and in accordance with, the manufacturer's installation instructions provided with the damper. A metallic grille (Item 9) shall be installed in accordance with installation instructions.

BROAN-NUTONE L L C — Models RDJ1 and RDH

4R. **Alternate Ceiling Damper* —** For use with min 18 in. deep trusses Max plenum box size nom 19 in. long by 19 in. wide and 11-7/8 in. high fabricated from galv steel. Aggregate damper openings shall not exceed 128 sq in. per 100 sq ft of ceiling area. Damper installed in accordance with the manufacturers installation instructions provided with the damper.

METAL-FAB INC — Models MSCD-HC and MRCD-HC

4S. **Alternate Ceiling Damper* —** Ceiling damper & fan assembly for use with min 18 in. deep trusses. Max nom area shall be 87 sq in. with the length not to exceed 9 in. and the width not to exceed 9-11/16 in. Aggregate damper openings shall not exceed 44 sq in. per 100 sq ft of ceiling area. Damper shall be installed in combination with one of the fan models described in, and in accordance with, the manufacturer's installation instructions provided with the damper. A plastic grille (Item 9) shall be installed in accordance with installation instructions.

BROAN-NUTONE L L C — Model RDMWT

4T **Alternate Ceiling Damper* —** (Optional, to be used with Air Duct Item 3) — For use with min 18 in. deep trusses. Max nom 21 in. long by 18 in. wide, fabricated from galvanized steel. Plenum box max size nom 21 in. long by 18 in. wide by 14 in. high (inner dimension) fabricated from either galvanized steel or min 1 in. thick Listed Duct Board bearing the UL Listing Marking having a min R-Value of 4.3. Installed in accordance with the instructions provided by the manufacturer. Max damper openings not to exceed 180 sq in. per 100 sq ft of ceiling area.

GREENHECK FAN CORP — Model CRD-1WT

4U **Alternate Ceiling Damper* —** (Optional, to be used with Air Duct Item 3) — For use with min 18 in. deep trusses. Max nom 12 in. long by 12 in. wide with an 8 in. diameter damper, fabricated from galvanized steel. Installed in accordance with the instructions provided by the manufacturer. Max damper openings not to exceed 72 sq in. per 100 sq ft of ceiling area.

GREENHECK FAN CORP — Model CRD-2WT

5. **Batts and Blankets* —** (Optional) — When truss depth is 18 in. or greater, insulation is optional. Insulation may alternately be secured to plywood subfloor with staples spaced 12 in. OC or to the trusses with 0.090 in. diam galv steel wires spaced 12 in. OC. Insulation may be draped over the resilient channels and gypsum board ceiling membrane and the resilient channels and gypsum board attachment shall be modified as specified in Items 6 and 7. Any glass fiber insulation bearing the UL Classification Marking for Surface Burning Characteristics and/or Fire Resistance, and having a min density of 0.5 pcf and a max thickness of 3-1/2 in. may be used. When Type AG-C gypsum panels are used, there is no limit on overall thickness. The Finish Rating is 24 min. when the insulation is draped over the resilient channels and gypsum board ceiling membrane and 25 min. when it is installed on underside of the plywood subfloor or when it is omitted.

5A. **Loose Fill Material* —** (Optional) — Loose fill material may be used as an alternate to batt insulation (Item 5). When used, the resilient channel and gypsum board attachment is modified as specified in Items 6 and 7. Any loose fill material bearing the UL Classification Marking for Surface Burning Characteristics, having a min density of 0.5 pcf and installed at a max thickness of 3-1/2 in. may be used. When Type AG-C gypsum panels are used, there is no limit on overall thickness. The finished rating when loose fill material is used has not been determined.

6. **Resilient Channels —** Resilient channels formed of 25 MSG galv steel, spaced 16 in. OC perpendicular to trusses. When batt insulation (Item 5) is draped over the resilient channel/gypsum board ceiling membrane, or when loose fill insulation (Item 5A) is used, the resilient channel spacing shall be reduced to 12 in. OC. Channels secured to each truss with 1-1/4 in. long Type S bugle head steel screws. Channels overlapped 4 in. at splices. Two channels, spaced 6 in. OC, oriented opposite each gypsum board end joint as shown in the above illustration. Additional channels shall extend min 6 in. beyond each side edge of board.

6A. **Steel Framing Members* —** (Not Shown) — As an alternate to Item 6, furring channels and **Steel Framing Members*** as described below:

a. **Furring Channels —** Formed of No. 25 MSG galv steel, 2-9/16 in. or 2-23/32 in. wide by 7/8 in. deep, spaced 24 in. OC perpendicular to trusses. When batt insulation (Items 5) is draped over the resilient channel/gypsum board ceiling membrane, the resilient channel spacing shall be reduced to 12 in. OC. Channels secured to trusses as described in Item b. Ends of adjoining channels overlapped 6 in. and tied together with

Design No. P522

June 17, 2014

Unrestrained Assembly Rating — **1 Hr**

Finish Rating — 25 Min (See Items 3 or 3A)

This design was evaluated using a load design method other than the Limit States Design Method (e.g., Working Stress Design Method). For jurisdictions employing the Limit States Design Method, such as Canada, a load restriction factor shall be used — See Guide BXUV or BXUV7

*** Indicates such products shall bear the UL or cUL Certification Mark for jurisdictions employing the UL or cUL Certification (such as Canada), respectively.**

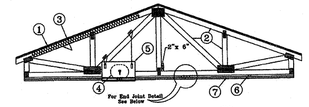

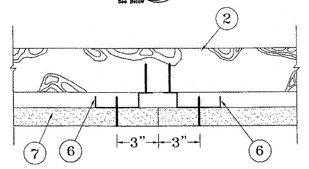

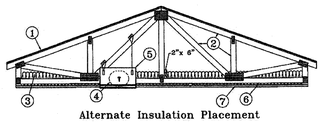

Alternate Insulation Placement

1. **Roofing System* —** Any UL Class A, B or C Roofing System (TGFU) or Prepared Roof Covering (TFWZ) acceptable for use over nom 15/32 in. thick wood structural panels, min. grade "C-D" or "Sheathing", Nom 15/32 in. thick wood structural panels secured to trusses with No. 6d ringed shank nails spaced 12 in. OC along each truss. Staples having equal or greater withdrawal and lateral resistance strength may be substituted for the 6d nails. Construction adhesive may be used with either the nails or staples.

2. **Trusses —** Pitched or parallel chord wood trusses, spaced a max of 24 in. OC, fabricated from nom 2 by 4 lumber, with lumber oriented vertically or horizontally. Truss members secured together with min. 0.0356 in. thick galv steel plates. Plates have 5/16 in. long teeth projecting perpendicular to the plane of the plate. The teeth are in pairs facing each other (made by the same punch), forming a split tooth type plate. Each tooth has a chisel point on its outside edge. These points are diagonally opposite each other for each pair. The top half of each tooth has a twist for stiffness. The pairs are repeated on approximately 7/8 in. centers with four rows of teeth per inch of plate width. Where the truss intersects with the interior face of the exterior walls, the min truss depth shall be 5-1/4 in. with a min roof slope of 3/12 and a min. area in the plane of the truss of 21 sq/ft. Where the truss intersects with the interior face of the exterior walls, the min truss depth may be reduced to 3 in. if the batts and blankets (Item 3) are used as shown in the above illustration (Alternate Insulation Placement) and are firmly packed against the intersection of the bottom chords and the plywood sheathing.

3. **Batts and Blankets* —** (Optional) - Required when Item 6B is used — Glass fiber insulation, secured to the wood structural panels with staples spaced 12 in. OC or to the trusses with 0.090 in. diam galv steel wires spaced 12 in. OC. Any glass fiber insulation bearing the UL Classification Marking as to Surface Burning Characteristics and/or Fire Resistance, having a min density of 0.5 pcf. As an option, the insulation may be fitted in the concealed space, draped over the resilient channel/gypsum board ceiling membrane when resilient channels and gypsum board attachment is modified as specified in Items 6 and 7. When **Steel Framing Members** (Item 6B) are used, max 3-1/2 in. thick insulation shall be draped over the furring channels (Item 6Ba) and gypsum board ceiling membrane, and friction-fitted between trusses and Steel Framing Members (Item 6Bd). The finished rating has only been determined when the insulation is secured to the decking.

3A. **Fiber, Sprayed* —** As an alternate to Item 3 (not evaluated for use with Item 6B) — Any thickness of spray-applied cellulose insulation material, having a min density of 0.5 lb/ft3, applied with water, over the resilient channel/gypsum board ceiling membrane when resilient channels and gypsum board attachment is modified as specified in Items 6 and 7. Fiber, Sprayed is applied with moisture in accordance with the application instructions supplied with the product. The finish rating when Fiber Sprayed is used has not been determined. Alternate application method: The fiber is applied without water or adhesive in accordance with the application instructions supplied with a minimum density of 0.5 lb/ft3 over the resilient channel/gypsum board ceiling membrane when resilient channels and gypsum board attachment is modified as specified in Items 6 and 7. Alternate application method: The fiber is applied without water or adhesive to a nominal density of 3.5 lb/ft3 behind netting (Item 9) stapled to the rafters. The netting is stapled at both lower edges of the rafters creating a cavity to accept the cellulose fiber.
U S GREENFIBER L L C — INS735& INS745 for use with wet or dry application. INS510LD, INS515LD, INS541LD, INS735, INS745, INS765LD, and INS770LD are to be used for dry application only.

4. **Air Duct* —** Any UL Class 0 or Class 1 flexible air duct installed in accordance with the instructions provided by the damper manufacturer.

5. **Ceiling Damper* —** Max nom area, 324 sq in. Max square size, 18 in. by 18 in. rectangular sizes not to exceed 324 sq in. with a max width of 18 in. Max damper height is 14 in. Installed in accordance with manufacturers installation instructions provided with the damper. Max damper openings not to exceed 162 sq in. per 100 sq ft of ceiling area.
C&S AIR PRODUCTS — Model RD-521
POTTORFF — Model CFD-521

5A. **Alternate Ceiling Damper* —** Max nom area, 196 sq in. Max square size, 14 in. by 14 in. Rectangular sizes not to exceed 196 sq in. with a max width of 26 in. Max overall damper height is 7 in. Installed in accordance with the manufacturers installation instructions provided with the damper. Max damper openings not to exceed 98 sq in. per 100 sq ft of ceiling area.

C&S AIR PRODUCTS — Model RD-521-BT
POTTORFF — Model CFD-521-BT.

5B. **Alternate Ceiling Damper* —** Ceiling damper & fan assembly. Max nom area shall be 75 sq in. with the length not to exceed 8-9/16 in. and the width not to exceed 8-3/4 in. Max height of damper shall be 9-7/8 in. Aggregate damper openings shall not exceed 38 sq in. per 100 sq ft of ceiling area. Damper shall be installed in combination with one of the fan models described in, and in accordance with, the manufacturers installation instructions provided with the damper. A plastic grille shall be installed in accordance with installation instructions.

DELTA ELECTRONICS INC — Models CRD2

6. **Furring Channels — Resilient channels formed of 25 MSG thick galv steel. Installed perpendicular to the trusses (Item 2), spaced a max of 16 in. OC when no insulation (Item 3 or 3A) is fitted in the concealed spaced, or a max of 12 in. OC when insulation (Item 3 or 3A) is fitted in the concealed space, draped over the resilient channel/gypsum board ceiling membrane. Two courses of resilient channel positioned 6 in. OC at wallboard butt-joints (3 in. from each end of wallboard). Channels oriented opposite at wallboard butt-joints. Channel splices overlapped 4 in. beneath wood trusses. Channels secured to each truss with 1-1/4 in. long Type S screws.**

6A. Steel Framing Members — (Not Shown)* — As an alternate to Item 6, furring channels and Steel Framing Members as described below:
a. Furring Channels — Formed of No. 25 MSG galv steel. 2-9/16 in. or 2-23/32 in. wide by 7/8 in. deep, spaced 24 in. OC perpendicular to trusses when no insulation (Items 3 or 3A) is fitted in the concealed space or 12 in. OC when insulation (Items 3 or 3A) is fitted in the concealed space, draped over the furring channel/gypsum board ceiling membrane or 24 in. OC when insulation (Items 3 or 3A) is fitted in the concealed space, draped over the furring channel/gypsum board ceiling membrane and a second layer of gypsum board is attached as described in Item 7 for steel framing members. Channels secured to trusses as described in Item 6Ab. Ends of adjoining channels overlapped 6 in. and tied together with double strand of No. 18 SWG galv steel wire near each end of overlap.

b. Steel Framing Members — Used to attach furring channels (Item a) to trusses (Item 2). Clips spaced 48 in. OC. RSIC-1 and RSIC-1 (2.75) clips secured to alternating trusses with No. 8 by 2-1/2 in. coarse drywall screw through the center grommet. RSIC-V and RSIC-V (2.75) clips secured to alternating trusses with No. 8 by 1-1/2 in. coarse drywall screw through the center hole. Furring channels are friction fitted into clips. RSIC-1 and RSIC-V clips for use with 2-9/16 in. wide furring channels. RSIC-1 (2.75) and RSIC-V (2.75) clips for use with 2-23/32 in. wide furring channels. Adjoining channels are overlapped as described in Item 6Aa. As an alternate, ends of adjoining channels may be overlapped 6 in. and secured together with two self-tapping No. 6 framing screws, min. 7/16 in. long at the midpoint of the overlap, with one screw on each flange of the channel. Additional clips required to hold furring channel that supports the gypsum board butt joints, as described in Item 7.

PAC INTERNATIONAL INC — Types RSIC-1, RSIC-V, RSIC-1 (2.75), RSIC-V (2.75).

6B. **Steel Framing Members* —** (Not Shown) - As an alternate to Items 6 and 6A.

a. **Furring Channels —** Hat-shaped furring channels, 7/8 in. deep by 2-5/8 in. wide at the base and 1-1/4 in. wide at the face, formed from No. 25 ga. galv steel, spaced max 16 in. OC perpendicular to trusses and Cold Rolled Channels (Item 6Bb). Furring channels secured to Cold Rolled Channels at every intersection with a 1/2 in. pan head self-drilling screw through each furring channel leg. Ends of adjoining channels overlapped 4 in. and tied together with two double strand No. 18 SWG galv steel wire ties, one at each end of overlap. Supplemental furring channels at base layer and outer layer gypsum board butt joints are not required. Batts and Blankets draped over furring channels as described in Item 3. Two layers of gypsum board attached to furring channels as described in Item 7.

b. **Cold Rolled Channels —** 1-1/2 in. by 1/2 in., formed from No. 16 ga. galv steel, positioned vertically and parallel to trusses, friction-fitted into the channel caddy on the Steel Framing Members (Item 6Bd). Adjoining lengths of cold rolled channels lapped min. 6 in. and wire-tied together with two double strand 18 SWG galv steel wire ties, one at each end of overlap.

c. **Blocking —** Where truss design does not permit direct, full contact of the hanger bracket, a piece of nominal 2 by 4 in. lumber (blocking), min. 6 in. long to permit full contact of the hanger bracket, to be secured vertically to the side of the truss (Item 2) at the top and bottom of the blocking at each Steel Framing Member (Item 6Bd) location.

d. **Steel Framing Members* —** Hangers spaced 48 in. OC. max along truss, and secured to the Blocking (Item 6Bc) on alternating trusses with a single 5/16 in. by 2 in. hex head lag bolt or four #6 1-1/4 in. drywall screws through mounting hole(s) on the hanger bracket. The two 1/4 in. long steel teeth on the hanger are embedded in the side of the blocking. Hanger positioned on blocking and leveling bolt height adjusted such that furring channels are flush with bottom of trusses before gypsum board installation. Spring gauge of hanger chosen per manufacturer's instructions.

KINETICS NOISE CONTROL INC — Type ICW.

6C. **Steel Framing Members* —** (Not Shown) - As an alternate to Items 6, 6A and 6B.

a. **Furring Channels —** Formed of No. 25 MSG galv steel, 2-3/8 in. wide by 7/8 in. deep installed perpendicular to wood structural members. Channels spaced a max of 24 in. OC when no insulation (Item 3 or 3A) is fitted in the concealed space or a max of 12 in. OC when insulation (Item 3 or 3A) is fitted in the concealed space. Channels secured to trusses as described in Item 6Cb. Ends of adjoining channels overlapped 6 in. and tied together with double strand of No. 18 AWG galvanized steel wire near each end of overlap.

b. **Steel Framing Members* —** Used to attach furring channels (Item 6Ca) to trusses (Item 2). Clips secured to the bottom chord of each truss (24 in. OC) with one No. 8 by 2-1/2 in. long coarse drywall screw through center grommet. Furring channels are friction fitted into clips. Adjoining channels are overlapped as described in Item 6Ca. As an alternate, ends of adjoining channels may be overlapped 6 in. and secured together with two self-tapping No. 6 framing screws, min 7/16 in. long at the midpoint of the overlap, with one screw on each flange of the channel. Additional clips required to hold furring channel that supports the gypsum board butt joints, as described in Item 7.

PLITEQ INC — Type Genie Clip

6D. **Steel Framing Members* —** (Not Shown) - As an alternate to Items 6, 6A, 6B and 6C.

a. **Main runners —** Installed perpendicular to trusses — Nom 10 or 12 ft long, 15/16 in. or 1-1/2 in. wide face, spaced 4 ft OC. Main runners hung a min of 2 in. from bottom chord of trusses with 12 SWG galv steel wire. Wires located a max of 48 in. OC.

b. **Cross tees or channels —** Nom 4 ft long, 15/16 in. or 1-1/2 in. wide face or cross channels, nom 4 ft long, 1-1/2 wide face, installed perpendicular to the main runners, spaced 16 in. OC. Additional cross tees or channels used at 8 in. from each side of butted gypsum board end joints. The cross tees or channels may be riveted or screw-attached to the wall angle or channel to facilitate the ceiling installation.

c. **Wall angles or channels —** Used to support steel framing member ends and for screw-attachment of the gypsum wallboard — Min 0.016 in. thick painted or galvanized steel angle with 1 in. legs or min. 0.016 in. thick painted or galvanized steel channel with a 1 by 1-1/2 by 1 in. profile, attached to walls at perimeter of ceiling with fasteners 16 in. OC

CGC INC — Type DGL or RX.
USG INTERIORS LLC — Type DGL or RX.

6E. **Alternate Steel Framing Members —** (Not Shown)* - As an alternate to items 6, 6A, 6B, and 6C, furring channels and Steel Framing Members as described below.

a. **Furring Channels —** Formed of No. 25 MSG galv steel, 2-5/8 in. wide by 7/8 in deep, spaced 24 in OC, perpendicular to trusses. When insulation, Items 3 or 3A is used, the furring channel spacing shall be reduced to 12 in. OC. Channels secured to joists as described in Item b.

b. **Steel Framing Members* —** Used to attach furring channels (Item a) to the wood trusses (Item 2). Clips spaced at 24" OC and secured to the bottom of the trusses with one No. 10 x 2-1/2 Coarse Drywall Screw through the center hole. Furring channels are then friction fitted into clips. Ends of channels are overlapped 6" and screwed with four No. 8 x 1/2 Self Drilling screws (2 per side 1 in. and 4 in. from overlap edge). Additional clips are required to hold the Gypsum Butt joints and side joints as described in Item 7.

STUDCO BUILDING SYSTEMS — RESILMOUNT Sound Isolation Clips - Type A237 or A237R

6F. **Steel Framing Members* —** (Not Shown) - As an alternate to Items 6 through 6E- Not for use with Items 3 or 3A. Main runners nom 12 ft long, spaced 72 in. OC. Main runners suspended by min 12 SWG galv steel hanger wires spaced 48 in. OC. Cross tees, nom 6 ft long, installed perpendicular to main runners and spaced 24 in. OC. Additional 6 ft long cross tees required at each gypsum board end joint with butted gypsum board end joints centered between cross tees spaced 8 in. OC. The main runners and cross tees may be riveted or screw attached to the wall angle or channel to facilitate the ceiling installation.

USG INTERIORS LLC — Type DGL or RX

7. **Gypsum Board* —** One layer of nom 5/8 in. thick by 48 in. wide boards, installed with long dimension parallel to trusses. Attached to the resilient channels using 1 in. long Type S bugle-head screws. Screws spaced a max of 12 in. OC along butted end-joints and in the field when no insulation (Item 3 or 3A) is fitted in the concealed spaced, or a max of 8 in. OC along butted end-joints and in the field when insulation (Item 3 or 3A) is fitted in the concealed space, draped over the resilient channel/gypsum board ceiling membrane.

When **Steel Framing Members*** (Item 6A or 6C) are used, sheets installed with long dimension perpendicular to furring channels and side joints of sheet located beneath trusses. Gypsum board screws are driven through channel spaced 12 in. OC in the field when no insulation (Item 3 or 3A) is fitted in the concealed space, or 8 in. OC in the field when insulation (Item 3 or 3A) is fitted in the concealed space, draped over the furring channel/gypsum board ceiling membrane. Gypsum board butt joints shall be staggered min. 2 ft within the assembly, and occur between the main furring channels. At the gypsum board butt joints, each end of the gypsum board shall be supported by a single length of furring channel equal to the width of the wallboard plus 6 in. on each end. The furring channels shall be spaced approximately 3-1/2 in. OC, and be attached to the trusses with one clip at each end of the channel. Screw spacing along the butt joint to attach the gypsum board to the furring channels shall be 8 in. OC. Second (outer) layer of gypsum board required when furring channels (Item 6A, a) are spaced 24 in. OC and insulation is fitted in the concealed space, draped over the furring channel/gypsum board ceiling membrane. Outer layer of gypsum board attached to the furring channels using 1-5/8 in. long Type S bugle-head screws spaced 8 in. OC at butted joints and 12 in. OC in the field. Butted end joints of outer layer to be offset a minimum of 8 in. from base layer end joints. Butted side joints of outer layer to be offset minimum 18 in. from butted side joints of base layer.

When **Steel Framing Members** (Item 6B) are used, two layers of nom 5/8 in. thick, 4 ft wide gypsum board are installed with long dimensions perpendicular to furring channels (Item 6Ba). Base layer attached to the furring channels using 1 in. long Type S bugle head steel screws spaced 8 in. OC along butted end joints and 12 in. OC in the field of the board. Butted end joints centered on the continuous furring channels. Butted base layer end joints to be offset a min of 16 in. in adjacent courses. Outer layer attached to the furring channels using 1-5/8 in. long Type S bugle head steel screws spaced 8 in. OC at butted end joints and 12 in. OC in the field. Butted end joints centered on the continuous furring channels and offset a min of 16 in. from butted end joints of base layer. Butted side joints of outer layer to be offset min 16 in. from butted side joints of base layer.

When **Steel Framing Members** (Item 6C) are used, one layer of nom 5/8 in. thick, 4 ft wide gypsum board is installed with long dimensions perpendicular to furring channels. Gypsum board secured to furring channels with nom 1 in. long Type S bugle-head steel screws spaced 8 in. OC in the field of the board. Gypsum board butted end joints shall be staggered minimum 72 in. At the gypsum board butt joints, each end of each gypsum board shall be supported by a single length of furring channel equal to the width of the gypsum board plus 3 in. on each end, spaced approximately 2 in. in from joint. Screw spacing along the gypsum board butt joint shall be 8 in. OC. Butt joint furring channels shall be attached with a RESILMOUNT Sound Isolation Clip secured to underside of every truss that is located over the butt joint. Over all Gypsum Board side joints, approximately 20 in. lengths of furring channel shall be installed parallel to trusses (Item 2) between main furring channels. Side joint furring channels shall be attached to underside of the joist with RESILMOUNT Sound Isolation Clips - located approximately 2 in. from each end of the approximate 20 in. length of channel. Both Gypsum Boards at side joints fastened into channel with screws spaced 8 in. OC, approximately 1/2 in. from joint edge.

When alternate **Steel Framing Members*** (Item 6F) are used, one layer of nom 5/8 in. thick, 4 ft wide gypsum board sheets installed with long dimension (side joints) perpendicular to the 6 ft long cross tees with the end joints staggered min 4 ft and centered between cross tees which are spaced 8 in. OC. Gypsum board side joints may occur beneath or between main runners. Prior to installation of the gypsum board sheets, backer strips consisting of nom 7-3/4 in. wide pieces of gypsum board are to be laid atop the cross tee flanges and centered over each butted end joint location. The backer strips are to be secured to the flanges of the cross tees at opposite corners of the backer strip with hold down clips to prevent the backer strips from being uplifted during screw-attachment of the gypsum board sheets. Gypsum board fastened to cross tees with 1 in. drywall screws spaced 1 in. and 4 in. from the side joints and max 8 in. OC in the field of the board. The butted end joints are to be secured to the backer strip with No. 10 by 1-1/2 in. long Type G laminating screws located 1 in. from each side of the butted end joint and spaced 1 in. and 4 in. from the side joints and max 8 in. OC in the field of the board.

CGC INC — Types C, IP-X2, IPC-AR.
UNITED STATES GYPSUM CO — Types C, IP-X2, IPC-AR.
USG MEXICO S A DE C V — Types C, IP-X2, IPC-AR.

7A. **Gypsum Board* —** For use with Steel Framing Members (Item 6D) when Batts and Blankets* (Item 3) are not used - One layer of nom 5/8 in. thick by 48 in. wide boards, installed with long dimension parallel to the main runners. Gypsum board fastened to each cross tee or channel with five wallboard screws, with one screw located at the midspan of the cross tee or channel, one screw located 12 in. from and on each side of the cross tee or channel mid span and one screw located 1-1/2 in. from each gypsum board side joint. Except at wallboard end joints, wallboard screws shall be located on alternating sides of cross tee flange. At gypsum board end joints, gypsum board screws shall be located 1/2 in. from the joint. Gypsum board fastened to main runners with wallboard screws 12 in. from side joints, midway between intersections with cross tees or channels (16 in. OC). End joints of adjacent gypsum board sheets shall be staggered not less than 32 in. Gypsum board sheets screw attached to leg of wall angle with wallboard screws spaced 12 in. OC. Joints treated as described in Item 7. For use with **Steel Framing Members*** (Item 6D) when **Batts and Blankets*** (Item 3) are used - Ratings limited to 1 Hour - 5/8 in. thick, 4 ft wide, installed with long dimension perpendicular to cross tees with side joints centered along main runners and end joints centered along cross tees. Fastened to cross tees with 1 in. long steel gypsum board screws spaced 8 in. OC in the field and 8 in. OC along end joints. Fastened to main runners with 1 in. long gypsum board screws spaced midway between cross tees. Screws along sides and ends of boards spaced 3/8 to 1/2 in. from board edge. End joints of the sheets shall be staggered with spacing between joints on adjacent boards not less than 4 ft OC.

CGC INC — Type C or IP-X2.
UNITED STATES GYPSUM CO — Type C or IP-X2.
USG MEXICO S A DE C V — Type C or IP-X2.

8. **Finishing System —** (Not Shown) — Vinyl, dry or premixed joint compound, applied in two coats to joints and screw-heads; paper tape, 2 in. wide, embedded in first layer of compound over all joints. As an alternate, nom 3/32 in. thick veneer plaster may be applied to the entire surface of gypsum board. **Alternate Ceiling Membrane** — Not Shown.

9. **Netting —** Fibrous, woven netting material fastened to underside of each joist with staples, with side joints overlapped.

*** Indicates such products shall bear the UL or cUL Certification Mark for jurisdictions employing the UL or cUL Certification (such as Canada), respectively.**

Last Updated on 2014-06-17

ASSEMBLY SOUND RATINGS

WALL ASSEMBLY (UL ASSEMBLY) SEE LS PLANS	STC RATING	IIC RATING	TEST NUMBER/STANDARD
U305	52	N/A	BW-35ST 1969/GEIGER AND HAMME
U341	58	N/A	TL-93-270/ NRC-CNRC
U344	52	N/A	BW-35ST 1969/GEIGER AND HAMME
U356	52	N/A	BW-35ST 1969/GEIGER AND HAMME
U404	N/A	N/A	--

FLOOR ASSEMBLY (UL ASSEMBLY) SEE LS PLANS	FINISH	STC RATING	IIC RATING	TEST NUMBER/STANDARD	
L574 W/ RESILENT CHANNEL	VINYL PLANK	62	53	USG090302A USG090501A USG090402A	USG LEVELROCK SOUND CONTROL & 6mm (1/4") MAT (NOTE: SOUND MAT NOT REQUIRED UNDER CARPET)
	CERAMIC TILE	64	54		
	CARPET & PAD	62	80		

ACOUSTIC NOTES:

1) FLOOR / CEILING SYSTEM-STC RATING
THE FLOOR / CEILING SYSTEM DESIGN IS UL L546 AND IS EXPECTED TO PROVIDE A DESIGN, OR LABORATORY TESTED, STC RATING OF THAT LISTED ABOVE. PROVIDED THAT THE RECOMMENDATIONS ARE FOLLOWED RELATED TO NOISE FLANKING PATHS (SEE BELOW), THE FOLLOWING SPECIFICATIONS SHALL BE FOLLOWED:

A. RESILIENT CHANNELS SHOULD BE USED TO ATTACH THE CEILING GYPSUM BOARD.

B. THE INSULATION MUST BE INSTALLED AT THE TOP OF THE TRUSS CAVITY IN ORDER TO PROVIDE A BUFFER BETWEEN THE FLOOR ABOVE AND ANY HVAC DUCTING, PIPES, AND CONDUIT THAT ARE INSTALLED IN THE TRUSS CAVITY.

C. ENSURE THAT THE HVAC FLEXIBLE DUCTING THAT IS INSTALLED WITHIN THE FLOOR / CEILING SYSTEM IS LOCATED TO ALLOW INSULATION TO BE PLACED BETWEEN THE TOP OF THE DUCT AND THE WOOD SUB-FLOOR. THIS DUCTING SHALL NOT BE IN DIRECT CONTACT WITH THE BOTTOM OF THE SUB-FLOOR. THERE SHALL BE AT LEAST ONE INCH OF INSULATION ABOVE THE DUCTING, AFTER COMPRESSION. IF THE DUCTING IS IN CONTACT WITH THE FLOOR, IT PROVIDES A DIRECT PATH FOR FOOTFALL NOISE TO ENTER THE DUCTING AND TRAVEL EFFICIENTLY INTO THE LIVING SPACES BELOW.

D. ENSURE THAT THE PERIMETER OF ALL FIRE DAMPERS AND FIRE SPRINKLERS ARE COMPLETELY SEALED WITH A RESILIENT, NON-HARDENING CAULK, SUCH AS SILICONE OR POLYURETHANE, OR FIRE CAULK.

2) FLOOR / CEILING SYSTEM – IIC RATING
THE FLOOR / CEILING SYSTEM DESIGN UL L546 AND IS EXPECTED TO PROVIDE A DESIGN, OR LABORATORY TESTED, II-C RATING OF THAT LISTED ABOVE, PROVIDED THAT THE RECOMMENDATIONS ARE FOLLOWED RELATED TO NOISE FLANKING PATHS ARE FOLLOWED.

THE DESIGN IIC RATING MUST BE AT LEAST 50, AND THE FIELD TESTED RATING MUST BE AT LEAST 45 IN ORDER TO MEET THE MINIMUM BUILDING CODE REQUIREMENT. A HIGHER DESIGN RATING OF 55 OR MORE IS RECOMMENDED IF THE CLIENT DESIRES BETTER PERFORMANCE. ACOUSTICAL UNDERLAYMENT MUST BE INSTALLED IN ALL RESIDENCES ABOVE THE FIRST FLOOR, BENEATH ALL HARD FLOOR COVERINGS, INCLUDING TILE, WOOD, LAMINATE, AND RESILIENT VINYL.

(NOTE: IT IS NOT NECESSARY TO IMPLEMENT ANY IMPROVEMENTS UNDER CARPET AND PAD OR ON FLOORS WHERE THERE ARE NO RESIDENCES LOCATED BELOW.)

THE CEILING GYPSUM BOARD MUST BE SEPARATED FROM THE WALL GYPSUM BOARD BY LEAVING A 1/8" GAP AT THE TOP OF ALL WALLS. THIS GAP MAY BE COVERED WITH MOLDING OR TRIM OR MAY BE SEALED USING CAULK. FIVE-SIDED GYPSUM BOARD BOXES SHOULD BE BUILT TO COMPLETELY ENCLOSE THE TOPS OF ALL RECESSED LIGHT CANS, CEILING FAN FIXTURES, AND ALL OTHER FIXTURES THAT PENETRATE THE CEILING. THIS APPLIES EVEN WHEN THE FIXTURES HAVE FIRE RATED CANS. INSULATION MUST BE PLACED ABOVE THESE GYPSUM BOARD BOXES.

3) TENANT SEPARATION WALL
THE TENANT SEPARATION WALL IS UL ASSEMBLY U341. BOTH STUD CAVITIES ARE TO BE FILLED WITH R13 BATT INSULATION. THIS ASSEMBLY IS EXPECTED TO PROVIDE A DESIGN, OR LABORATORY TESTED, STC RATING AS LISTED, PROVIDED THAT THE RECOMMENDATIONS ARE FOLLOWED RELATED TO NOISE FLANKING PATHS.

4) CORRIDOR WALL / INTERIOR BEARING WALLS
THE CORRIDOR WALL IS UL ASSEMBLY U305. THE STUD CAVITY IS FILLED WITH 3" SOUND ATTENUATION BATT INSULATION. THIS ASSEMBLY IS EXPECTED PROVIDE A DESIGN, OR LABORATORY TESTED STC RATING AS LISTED, PROVIDED THAT THE RECOMMENDATIONS ARE FOLLOWED RELATED TO NOISE FLANKING PATHS.

5) INTERIOR TENANT WALLS
THE INTERIOR TENANT NON-BEARING WALLS ARE NON-RATED ASSEMBLIES, AND ARE ATTACHED TO THE TRUSSES WITH STC CLIPS. THE STUD CAVITIES ARE FILLED WITH 3" SOUND ATTENUATION BATT INSULATION WHERE SHOWN ON THE PLANS. THIS ASSEMBLY IS EXPECTED PROVIDE REDUCED SOUND TRAVEL, PROVIDED THAT THE RECOMMENDATIONS ARE FOLLOWED RELATED TO NOISE FLANKING PATHS. GYPSUM BOARD TO BE SEPARATED AND GAPS PROVIDED PER #2 ABOVE, AND SEALED WITH CAULK.

6) NOISE FLANKING PATHS
AIRBORNE NOISE TRANSMITS FROM ONE TENANT SPACE TO ANOTHER BY TRAVELING DIRECTLY THROUGH PARTITIONS AND THROUGH ACOUSTICAL LEAK POINTS, KNOW AS "FLANKING PATHS". PENETRATIONS THROUGH PARTITIONS SUCH AS ELECTRICAL OUTLET BOXES, SWITCHES, FIRE ALARM DEVISES, SIGNALING EQUIPMENT, SPRINKLER HEADS, EXHAUST FANS, PLUMBING PIPES, ETC.. ARE ALL EXAMPLES OF "FLANKING PATHS" AND SHOULD BE SEALED PROPERLY WITH ACOUSTICAL SEALANT AND/OR ENCLOSED WITH 5 SIDED GYP. BD. BOXES WITHIN THE CAVITY.

STRUCTURE-BORNE NOISE TRANSMISSION IS MORE COMPLEX AND CAN OCCUR THROUGH MANY PATHS. THIS IS ESPECIALLY PREVALENT WHERE WALLS AND FLOOR/CEILING SYSTEMS ARE JOINED TOGETHER. STRUCTURE- BORNE NOISE TRANSMITS FROM ONE ROOM TO ANOTHER WHEN THE WALL OR FLOOR / CEILING SYSTEM VIBRATES AND ALSO THRU STRUCTURAL FLANKING PATHS.

ROOF-CEILING SYSTEMS

GA FILE NO. RC 2751	GENERIC	2 HOUR FIRE

WOOD ROOF TRUSSES, GYPSUM WALLBOARD, RIGID FURRING CHANNELS

Base layer 5/8" type X gypsum wallboard applied at right angles to wood roof trusses 24" o.c. with 1 1/4" Type W drywall screws 12" o.c. **Second** layer 5/8" type X gypsum wallboard applied at right angles to trusses with 2" Type W drywall screws 12" o.c. Second layer joints offset 24" from base layer joints. **Third** layer 5/8" type X gypsum wallboard applied at right angles to trusses with 2 1/2" Type W drywall screws 12" o.c. Third layer joints offset 12" from second layer joints. Hat-shaped rigid furring channels 24" o.c. applied at right angles to trusses over third layer with two 2 1/2" long Type W drywall screws at each truss. **Face** layer 5/8" type X gypsum wallboard applied at right angles to furring channels with 1 1/8" Type S drywall screws 12" o.c. Wood trusses supporting 3/4" T & G edge wood structural panels applied at right angles to trusses with 8d nails 6" o.c. at joints and 12" at intermediate I-joists. Appropriate roof covering. **Ceiling provides two-hour fire-resistance protection for wood framing.**

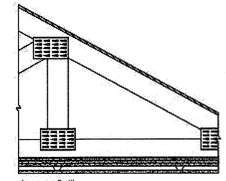

Approx. Ceiling Weight: 12 psf
Fire Test: UL R4024, 00NK26545, 4-27-01, UL Design L556

LAKE COUNTY BUILDING SERVICES
Any errors or omissions in these plans shall be made to conform with the applicable code requirements per Florida Building Code, in accordance with Section 107. Plans were reviewed for code compliance and shall be kept on job site.

RECEIVED FEB 14 2019

H1 UL P522 — NTS

H7 RC 2751 — 1 1/2" = 1'-0"

PERMIT REVIEW STAMP

ISSUE HISTORY

No.	Date	Description
1	02/08/2019	ISSUE FOR PERMIT

REVISION HISTORY

No.	Date	Description

These documents and the contents are the property of FUGLEBERG KOCH, and may not be reproduced, in whole or in part, in any form or manner whatsoever without the expressed written consent of Fugleberg Koch, is prohibited by law.
© 2017 Those documents are copyrighted by FUGLEBERG KOCH ARCHITECTS, and are issued only for the specific project listed in this drawing. Any reproductions, revisions, or modifications of these documents without the expressed written consent of Fugleberg Koch, is prohibited by law.

FUGLEBERG KOCH

2555 Temple Trail, Winter Park, FL 32789 (407) 629-0595
www.fuglebergkoch.com AA26002103

CONSULTANT

MICHAEL E. GOVE — LICENSE NUMBER — STATE OF FLORIDA — AR94111 — REGISTERED ARCHITECT — 04/08/2019

SUMMER BAY APTS. II LAKE COUNTY, FL	Drawn: Author Checked: Checker Approved: Approver Date: Issue Date Project #: 5389
UL REFERENCE DIRECTORY - ROOF SYSTEMS	
A0.34	

PLOTTED: 2/11/2019 2:28:55 PM

Design No. F-C-1009

January 15, 2015

ANSI/UL1479 (ASTM E814)	CAN/ULC S115
F Rating — 1 and 2 Hr (See Item 1)	F Rating — 1 and 2 Hr (See Item 1)
T Rating — 1/4 Hr	FT Rating — 1/4 Hr
L Rating At Ambient — Less Than 1 CFM/sq ft	FH Rating — 1 and 2 Hr (See Item 1)
L Rating At 400 F — 4 CFM/sq ft	FTH Rating — 1/4 Hr
	L Rating At Ambient — Less Than 1 CFM/sq ft
	L Rating At 400 F — 4 CFM/sq ft

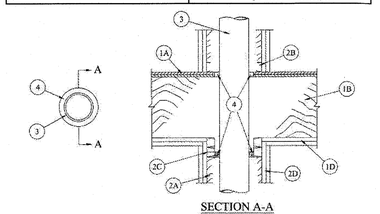

SECTION A-A

1. **Floor-Ceiling Assembly —** The 1 or 2 hr fire-rated solid or trussed lumber joist floor-ceiling assembly shall be constructed of the materials and in the manner specified in the individual L500 Series Floor-Ceiling Designs in the UL Fire Resistance Directory. **The F Rating of the firestop system is equal to the rating of the floor-ceiling assembly.** The general construction features of the floor-ceiling assembly are summarized below:
A. **Flooring System —** Lumber or plywood subfloor with finish floor of lumber, plywood or **Floor Topping Mixture*** as specified in the individual Floor-Ceiling Design. Diam of opening to be max 1 in. (25 mm) larger than diam of pipe. As an alternate, the opening may be square-cut with a max dimension 1 in. (25 mm) greater than the diam of the pipe.
B. **Wood Joists* —** Nom 10 in. (254 mm) deep (or deeper) lumber, steel or combination lumber and steel joists, trusses or **Structural Wood Members*** with bridging as required and with ends firestopped.
C. **Furring Channels —** (Not Shown) —(As required) Resilient galvanized steel furring installed in accordance with the manner specified in the individual L500 Series Designs in the Fire Resistance Directory.
D. **Gypsum Board* —** Thickness, type, number of layers and fasteners shall be as specified in the individual Floor-Ceiling Design. Diam of opening to be max 1 in. (25 mm) larger than diam of pipe.

2. **Chase Wall —** (Optional) - The through penetrant (Item 3) may be routed through a 1 or 2 hr fire-rated single, double or staggered wood stud/gypsum board chase wall having a fire rating consistent with that of the floor-ceiling assembly. Depth of chase wall to be min 1 in. greater than the diameter of the through penetrant. The chase wall shall be constructed of the materials and in the manner specified in the individual U300 Series Wall and Partition Designs in the UL Fire Resistance Directory and shall include the following construction features:

A. **Studs —** Nom 2 by 4 in. (51 by 102 mm), 2 by 6 in. (51 by 152 mm) or double nom 2 by 4 in. (51 by 102 mm) lumber studs. Nom 2 by 4 in. (51 by 102 mm) studs are allowed for through-penetrants (Item 3) not exceeding nom 2 in. (51 mm) diam.
B. **Sole Plate —** Nom 2 by 4 in. (51 by 102 mm), 2 by 6 in. (51 by 152 mm) or parallel 2 by 4 in. (51 by 102 mm) lumber plates, tightly butted. Diam of opening is to be max 1 in. (925 mm) larger than diam of pipe. As an alternate, the opening may be square-cut with a max dimension 1 in. (25 mm) greater than the diam of the pipe. Plates may be discontinuous over opening, terminating at two opposing edges of opening. Max length of discontinuity to be 1 in. (25 mm) greater than diam of through penetrant.
C. **Top Plate —** The double top plate shall consist of two nom 2 by 4 in. (51 by 102 mm), 2 by 6 in. (51 by 152 mm) or two sets of parallel 2 by 4 in. (51 by 102 mm) lumber plates, tightly butted. Diam of opening is to be max 1 in. (25 mm) larger than diam of pipe. As an alternate, the opening may be square-cut with a max dimension 1 in. (25 mm) greater than the diam of the pipe. Plates may be discontinuous over opening, terminating at two opposing edges of opening. Max length of discontinuity to be 1 in. (25 mm) greater than diam of through penetrant.
D. **Steel Plate —** When lumber plates are discontinuous, nom 1-1/2 in. (38 mm) wide No. 20 gauge (or heavier) galv steel plates shall be installed to connect each discontinuous lumber plate and to provide a form for the fill material. Steel plates sized to lap 2 in. (51 mm) onto each discontinuous lumber plate and secured to lumber plates with steel screws or nails.
E. **Gypsum Board* —** Thickness, type, number of layers and fasteners shall be as specified in individual Wall and Partition Design.

3. **Through Penetrants —** One metallic pipe, conduit or tubing to be installed within the firestop system. Pipe, conduit or tubing to be rigidly supported on both sides of floor assembly. The annular space within the firestop system shall be min 0 in. (point contact) to max 1 in. (25 mm). The following types and sizes of metallic pipes or conduits may be used:
A. **Steel Pipe —** Nom 4 in. (102 mm) diam (or smaller) Schedule 10 (or heavier) steel pipe.
B. **Iron Pipe —** Nom 4 in. (102 mm) diam (or smaller) cast or ductile iron pipe.
C. **Conduit —** Nom 4 in. (102 mm) diam (or smaller) steel electrical metallic tubing or steel conduit.
D. **Copper Tubing —** Nom (102 mm) 4 in. diam (or smaller) Type L (or heavier) copper tubing.
E. **Copper Pipe —** Nom (102 mm) 4 in. diam (or smaller) Regular (or heavier) copper pipe.

4. **Fill, Void or Cavity Material* — Sealant —** Min 3/4 in. (19 mm) thickness of fill material applied within the annulus, flush with the top surface of the floor or the sole plate. Min 5/8 in. (16 mm) thickness of fill material applied within the annulus, flush with bottom surface of ceiling or lower top plate.

HILTI CONSTRUCTION CHEMICALS, DIV OF HILTI INC — CP601S, CFS-S SIL GG, CP606, FS-One Sealant or FS-ONE MAX Intumescent Sealant (Note: L Ratings apply only when FS-ONE Sealant is used.)

*** Indicates such products shall bear the UL or cUL Certification Mark for jurisdictions employing the UL or cUL Certification (such as Canada), respectively.**

Last Updated on 2015-01-15

Design No. F-C-2008

May 20, 2005

F Rating — 1 Hr

T Rating — 1 Hr

L Rating At Ambient — 7 CFM/sq ft (See Item 3B)

L Rating At 400 F — Less Than 1 CFM/sq ft (See Item 3B)

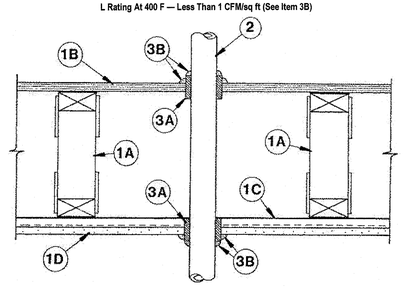

1. **Floor Assembly —** The fire rated wood truss or combination wood and steel truss Floor-Ceiling assembly shall be constructed of the materials and in the manner described in the individual L500 Series Design in the UL Fire Resistance Directory and shall include the following construction features:
A. **Trusses —** Min 12 in. (305 mm) deep parallel chord trusses fabricated from 2 by 4 in. (51 by 102 mm) lumber in conjunction with galv steel truss plates or **Structural Wood Members*** with bridging as required.
B. **Flooring —** Nom 3/4 in. (19 mm) thick plywood flooring with or without **Floor Topping Mixture*.** Diam of hole-sawed opening in flooring to be 1/2 to 3/4 in. (13 to 19 mm) larger than diam of pipe. Max diam of opening in flooring is 3 in. (76 mm).
C. **Furring Channels —** Rigid or resilient galv steel furring channels installed perpendicular to bottom chord of trusses.
D. **Gypsum Board* —** Nom 4 ft (1.22 m) wide by 5/8 in. (16 mm) thick, screw-attached to furring channels. Diam of hole-sawed opening in gypsum wallboard ceiling to be 1/2 to 3/4 in. (13 to 19 mm) larger than diam of pipe. Max diam of opening in ceiling is 3 in. (76 mm)
2. **Nonmetallic Pipe —** Nom 2 in. (51 mm) diam (or smaller) Schedule 40 polyvinyl chloride (PVC), SDR 13.5 chlorinated polyvinyl chloride (CPVC) or solid-core Schedule 40 acrylonitrile-butadiene-styrene (ABS) pipe for use in closed (process or supply) or vented (drain, waste or vent) piping systems. One pipe to be installed approx midway between trusses and centered in circular openings in flooring and in ceiling. A nom 1/4 in. to 3/8 in. (6 to 10 mm) annular space is required in the firestop system. Pipe to be rigidly supported on both sides of Floor-Ceiling assembly.
2A. **Electrical Nonmetallic Tubing† —** Nom 1 in. (25 mm) diam (or smaller) corrugated wall ENT constructed of polyvinyl chloride. ENT to be installed as a complete system with all terminations in junction boxes, outlet boxes or other approved enclosures as specified in the National Electrical Code. Max one ENT per through opening. ENT to be centered in opening and rigidly supported on both sides of the Floor-Ceiling assembly. See **Electrical Nonmetallic Tubing** (FKHU) category in Electrical Construction Materials Directory for names of manufacturers.
3. **Firestop System —** The details of the firestop system shall be as follows:
A. **Fill, Void or Cavity Materials* — Wrap Strip —** Nom 1/4 in. (6 mm) thick intumescent elastomeric material faced on one side with aluminum foil, supplied to 2 in. (51 mm) wide strips. Nom 2 in. (51 mm) wide strip tightly-wrapped around nonmetallic pipe (foil side exposed), secured with two steel tie wires and slid into hole-sawed opening in flooring (Item 1B) and in gypsum wallboard ceiling (Item 1D). Bottom edge of wrap strip to project 9/16 to 11/16 in. (14 to 17.5 mm) below bottom surface of flooring and below bottom (ceiling) surface of gypsum board.
3M COMPANY — Type FS-195+
B. **Fill, Void or Cavity Materials* — Caulk, Sealant or Putty —** Nom 1/4 in. (6 mm) thickness of caulk or putty to be applied to the exposed edge of the wrap strip layer (top of flooring and bottom of gypsum board ceiling). Generous application of caulk or putty to be applied to fill all gaps at the wrap strip/flooring and wrap strip/gypsum board ceiling interfaces.
3M COMPANY — CP 25WB+ Caulk, FB-3000 WT Sealant, MP+ Stix Putty (Note: L Ratings apply only when Type CP 25WB+ caulk or FB-3000 WT sealant is used. CP 25WB+ not suitable for use with CPVC pipes.)
*Bearing the UL Classification Mark

Last Updated on 2005-05-20

Design No. F-C-2024

November 20, 2009

F Ratings — 1 and 2 Hr (See Item 1)

T Ratings — 0, 1, 1-1/2 and 2 Hr (See Item 3)

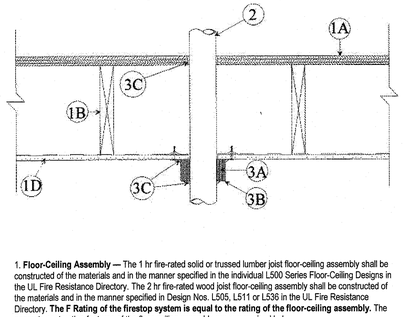

1. **Floor-Ceiling Assembly —** The 1 hr fire-rated solid or trussed lumber joist floor-ceiling assembly shall be constructed of the materials and in the manner specified in the individual L500 Series Floor-Ceiling Designs in the UL Fire Resistance Directory. The 2 hr fire-rated wood joist floor-ceiling assembly shall be constructed of the materials and in the manner specified in Design Nos. L505, L511 or L536 in the UL Fire Resistance Directory. **The F Rating of the firestop system is equal to the rating of the floor-ceiling assembly.** The general construction features of the floor-ceiling assembly are summarized below:

A. **Flooring System —** Lumber or plywood subfloor with finish floor of lumber plywood or **Floor Topping Mixture*** as specified in the individual Floor-Ceiling Design.
B. **Wood Joists* —** For 1 hr fire-rated floor-ceiling assemblies nom 10 in. (254 mm) deep (or deeper) lumber, steel or combination lumber and steel joists, trusses or **Structural Wood Members*** with bridging as required and with ends firestopped. For 2 hr fire-rated floor-ceiling assemblies, nom 2 by 10 in. (51 by 254 mm) lumber joists spaced 16 in. (406 mm) OC with nom 1 by 3 in. (25 by 76 mm) lumber bridging and with ends firestopped.
C. **Furring Channels —** (Not Shown) — Resilient galv steel furring installed perpendicular to wood joists between first and second layers of wallboard (Item 1D) in 2 hr fire-rated assembly. Furring channels spaced max 24 in. (610 mm) OC.
D. **Gypsum Board* —** Nom 4 ft (122 cm) wide by 5/8 in. (16 mm) thick as specified in the individual Floor-Ceiling Design. First layer of wallboard nailed to wood joists. Second layer of wallboard (2 hr fire-rated assembly) screw-attached to furring channels.

2. **Through Penetrants —** One nonmetallic pipe, conduit or tubing to be installed approx midway between wood joists. Diam of openings hole-sawed through flooring system and through two layers gypsum wallboard ceiling to be 0 to 1/4 in. (0 to 6 mm) larger than the outside diam of through-penetrant. Pipe or conduit to be rigidly supported on both sides of the floor-ceiling assembly. The following types and sizes of nonmetallic pipes or conduits may be used:

A. **Polyvinyl Chloride (PVC) Pipe —** Nom 4 in. (102 mm) diam (or smaller) Schedule 40 solid-core PVC pipe for use in closed (process or supply) or vented (drain, waste or vent) piping system.
B. **Cellular-Core Polyvinyl Chloride (ccPVC) Pipe —** Nom 4 in. (102 mm) diam (or smaller) Schedule 40 cellular core PVC pipe for use in closed (process or supply) or vented (drain, waste or vent) piping system.
C. **Chlorinated Polyvinyl Chloride (CPVC) Pipe —** Nom 4 in. (102 mm) diam (or smaller) SDR13.5 CPVC pipe for use in closed (process or supply) piping systems.
D. **Acrylonitrile Butadiene Styrene (ABS) Pipe —** Nom 4 in. (102 mm) diam (or smaller) Schedule 40 solid-core ABS pipe for use in closed (process or supply) or vented (drain, waste or vent) piping systems.
E. **Cellular-Core Acrylonitrile Butadiene Styrene (ccABS) Pipe —** Nom 4 in. (102 mm) diam (or smaller) Schedule 40 cellular core ABS pipe for use in closed (process or supply) or vented (drain, waste or vent) piping systems.

3. **Firestop System —** The details of the firestop system shall be as follows:

A. **Fill, Void or Cavity Materials* — Wrap Strip —** Nom 1/4 in. (6 mm) thick intumescent elastomeric material faced on one side with aluminum foil, supplied in 1 and 2 in. (25 and 51 mm) wide strips. Strips tightly wrapped around nonmetallic pipe (foil side exposed) with the edges butted against the bottom surface of the gypsum wallboard ceiling. The min wrap strip width, the number of layers of wrap strip required, the type of pipe and the nom diam, as well as the F and T Rating of the system are shown in the following table:

Pipe Type	Nom Pipe Diam In.	F Rating Hr	T Rating Hr	Wrap Strip Width In.	Min Wrap Strip Layers
PVC, CPVC, ABS,	1/2 (13 mm) to 1-1/2 (38 mm)	1	1	1 (25 mm)	1
ccPVC or ccABS (a)					
PVC, CPVC, ABS,	2 (51 mm)to 2-1/2 (64 mm)	1	1	1 (25 mm)	2
ccPVC, or ccABS (a)					
PVC, CPVC, ABS,	3 (76 mm)	1	1	1 (25 mm)	3
ccPVC or ccABS (a)					
PVC, CPVC, ABS,	1/2 (13 mm) to 2 (51 mm)	1	1	2 (51 mm)	1
ccPVC or ccABS (a)					
PVC, CPVC, ABS or ccPVC	2-1/2 (64 mm) to 4 (102 mm)	1	1	2 (51 mm)	2
ccABS (a)	2-1/2 (64 mm) to 3 (76 mm)	1	1/2	2 (51 mm)	2
ccABS (a)	3-1/2 (89 mm) to 4 (102 mm)	1	1/2	2 (51 mm)	3
PVC, CPVC, ABS, or ccPVC	1/2 (13 mm)to 1-1/2 (38 mm)	2	1-1/2	1 (25 mm)	1
ccABS (a)	1/2 (13 mm) to 1-1/2 (38 mm)	2	2	2 (51 mm)	2
ABS, PVC, ccPVC, or CPVC	1/2 (13 mm) to 2 (51 mm)	2	1-1/2	2 (51 mm)	1
ABS, PVC, ccPVC or CPVC	2-1/2 (64 mm) to 3 (76 mm)	2	1-1/2	2 (51 mm)	2
ABS	3-1/2 (89 mm) to 4 (102 mm)	2	1-1/2	2 (51 mm)	3
PVC, ccPVC or CPVC	3-1/2 (89 mm) to 4 (102 mm)	2	2	2 (51 mm)	3

(a) — Requires use of aluminum tape detailed in Item 3D

3M COMPANY — Type FS-195+

B. **Steel Collar —** Nom 2 in. (51 mm) deep collar with 1-1/4 in. (32 mm) wide by 2 in. (51 mm) long anchor tabs and min 3/4 in. (19 mm) long tabs to retain wrap strip layers. Coils of precut 0.016 in. (.41 mm) thick (30 gauge) galv sheet steel are available from wrap strip manufacturer. As an alternate, collar my be field fabricated from min 0.016 in. (.41 mm) thick (30 gauge) galv sheet steel in accordance with instruction sheet applied by wrap strip manufacturer Steel collar, with anchor tabs bent outward 90 degrees, wrapped tightly around wrap strip layers with min 1 in. (25 mm) overlap at the seam. With steel anchor tabs pressed tightly against underside of gypsum wallboard ceiling, compress collar around wrap strip layers using a min 1/2 in. (13 mm) wide by 0.028 in. (.71 mm) thick stainless steel band clamp at the collar midheight. As an alternate to the band clamps, collars may be secured by a means No. 10 by 1/2 in. (13 mm) long sheet metal screws installed in the vertical axis at the center of the 1 in. (25 mm) overlap along the perimeter joint of the collar. A min of three screws is required.
Secure collar to gypsum wallboard ceiling using 3/16 in. (5 mm) diam steel toggle bolts (5/8 in. (16 mm) grip) in conjunction with 1-1/4 in. (32 mm) diam steel fender washers. Min of three fasteners, symmetrically located, required for nom 1/2 in. to nom 3 in. (13 mm to 76 mm) diam pipes. Min of four symmetrically located fasteners required for nom 3-1/2 in. and 4 in. (89mm and 102 mm) diam pipes. As a final step, bend wrap strip retainer tabs 90 degrees toward pipe to lock wrap strip layers in position.

C. **Fill, Void or Cavity Materials* — Caulk or Sealant —** Generous application of caulk to be applied around the perimeter of the steel collar at its interface with the gypsum wallboard ceiling and around the perimeter of the pipe at its interface with the wrap strip layers. Caulk also applied around perimeter of pipe to fill annular space to max extent possible, flush with top surface of floor.

3M COMPANY — CP25 WB+, IC 15WB+ caulk, FireDam 150+ caulk or FB-3000 WT sealant. (Note: CP 25WB+ and FireDam 150+ not suitable for use with CPVC pipes.)

D. **Foil Tape (not shown) —** Nom 4 in. (102 mm) wide, 3 mil thick aluminum tape wrapped around pipe prior to the installation of the wrap strip (Item 3A). Min of one wrap, flush with the ceiling and proceeding downward. Tape is required only for nom 3-1/2 in. to 4 in. (89 mm to 102 mm) diam ABS pipes and for all ABS pipes.

E. **Firestop Device* —** (Not Shown) — As an alternate to Item A and B when nom 1-1/2 in. (32 mm), 2 in. (51 mm), 3 in. (76 mm), or 4 in. (102 mm) diam nonmetallic pipes are used, a firestop device consisting of a sheet-steel split collar lined with intumescent material and provided with steel clips for attachment may be used in accordance with the table below. Firestop device to be installed on underside of ceiling in accordance with the accompanying installation instructions.

Pipe Type	Nom Pipe Diam, In. (mm)	F Rating Hr	T Rating Hr	Firestop Device
PVC, CPVC, ABS,	1-1/2 (32)	1	1	PPD 1.5 or PPD 150
ccPVC or ccABS (a)				
PVC, CPVC, ABS,	2 (51)	1	1	PPD 2 or PPD 200
ccPVC or ccABS (a)				
PVC, CPVC, ABS,	3 (76)	1	1	PPD 3 or PPD 300
ccPVC or ccABS (a)				
PVC, CPVC, ABS or ccPVC	4 (102)	1	1	PPD 4 or PPD 400
ccABS (a)	2 (51)	1	1/2	PPD 200
ccABS (a)	3 (76)	1	1/2	PPD 300
ccABS (a)	4 (102)	1	1/2	PPD 400
PVC, CPVC, ABS or ccPVC	1-1/2 (32)	2	1-1/2	PPD 1.5 or PPD 150
ccABS (a)	1-1/2 (32)	2	2	PPD 150
ABS, PVC, ccPVC or CPVC	1-1/2 (32)	2	1-1/2	PPD 150
ABS, PVC, ccPVC or CPVC	2 (51)	2	1-1/2	PPD 200
ABS, PVC, ccPVC or CPVC	3 (76)	2	1-1/2	PPD 300
PVC, ccPVC or CPVC	4 (102)	2	2	PPD 400
ABS	4 (102)	2	1-1/2	PPD 400

(a) — Requires use of aluminum tape detailed in Item 3D

*Bearing the UL Classification Mark

Last Updated on 2009-11-20

Design No. F-C-2037

November 26, 1997

F Rating — 1 Hr

T Rating — 1 Hr

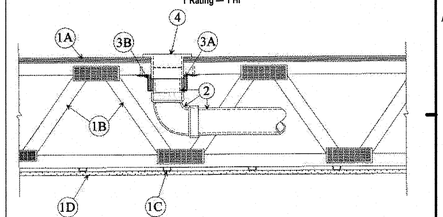

1. **Floor-Ceiling Assembly —** The fire-rated solid or trussed lumber joist floor-ceiling assembly shall be constructed of the materials and in the manner specified in individual L500 Series Floor-Ceiling Designs in the UL Fire Resistance Directory. The general construction details of the floor-ceiling assembly are summarized below:
A. **Flooring System —** Lumber or plywood subfloor with finish floor of lumber, plywood or **Floor Topping Mixture*** as specified in the individual Floor-Ceiling Design. Max diam of opening is 5 in.
B. **Wood Joists —** Nom 2 by 10 in. lumber joists spaced 16 in. OC with nom 1 by 3 in. lumber bridging and with ends firestopped. As an alternate to lumber joists, nom 10 in. deep (or deeper) lumber, steel or combination lumber and steel joists, trusses or **Structural Wood Members*** with bridging as required with ends firestopped.
C. **Furring Channels —** Resilient galv steel furring installed perpendicular to wood joists (Item 1B) between wallboard (Item 1D) and wood joists as required in the individual Floor-Ceiling Design.
D. **Gypsum Board* —** Nom 4 ft wide by 5/8 in. thick as specified in the individual Floor-Ceiling Design. Wallboard secured to wood joists as specified in the individual Floor-Ceiling Design.

2. **Drain Piping —** Nom 4 in. diam (or smaller) Schedule 40 polyvinyl chloride (PVC) or acrylonitrile butadiene styrene (ABS) drain piping and fittings. Diam of circular opening hole through flooring (Item 1A) to be max 1/2 in. larger than outside diam of pipe. Short length of pipe with 90 degree elbow fitting cemented into bottom socket of closet flange (Item 5). Drain piping cemented to elbow.

3. **Firestop System —** The firestop system shall consist of the following:
A. **Fill, Void or Cavity Materials* — Wrap Strip —** Nom 1/4 in. thick intumescent material faced on both sides with a plastic film, supplied in 1-1/2 in. wide strips. Nom 1-1/2 in. wide strips tightly-wrapped around nonmetallic pipe with the edges butted against the underside of flooring and around the entire perimeter of the hole-sawed opening. Two layers of wrap strip are required. Each layer of wrap strip to be installed with butted seam, butted seams in successive layers staggered or aligned. Wrap strip layer(s) temporarily held in position using aluminum foil tape.
SPECIFIED TECHNOLOGIES INC — SpecSeal RED Strip
B. **Steel Collar —** Collar fabricated from coils of precut 0.016 in. thick (30 MSG) galv sheet steel available from wrap strip manufacturer. Collar shall be nom 1-1/2 in. deep with min four 1 in. wide by 2 in. long anchor tabs for securement to top surface of flooring. Retainer tabs, 3/4 in. wide tapering down to 1/4 in. wide and located opposite the anchor tabs, are folded 90 degrees toward through-penetrant surface to maintain the annular space around the through-penetrant and to retain the wrap strips. Steel collar wrapped around wrap strips and through-penetrant with a 1 in. wide overlap along its perimeter joint and secured together by means of a min 1/2 in. wide by 0.028 in. thick stainless steel hose clamp at mid-height of the steel collar. As an alternate to the steel hose clamp, the steel collar can be secured together by means of three No. 8 by 3/8 in. long steel sheet metal screws. Anchor tabs of collar bent outwards and secured to top surface of flooring or underside of floor using min 3/4 in. long steel wood screws in conjunction with 1/4 in., by 1-1/4 in. diam steel fender washers.

4. **Closet Flange —** PVC or ABS closet stub sized to accommodate drain pipe. Closet flange installed in hole-sawed opening in flooring system with flange secured to top of flooring with steel screws.

5. **Water Closet —** (Not Shown) — Floor mounted vitreous china water closet.

*Bearing the UL Classification Mark

Last Updated on 1997-11-26

LAKE COUNTY BUILDING SERVICES
Any errors or omissions in these plans shall be made to conform with the applicable code requirements per Florida Building Code, in accordance with Section 107. Plans were reviewed for code compliance and shall be kept on job site.

RECEIVED FEB 14 2019

H1 UL F-C-1009 NTS

H3 UL F-C-2008 NTS

H5 UL F-C-2024 NTS

H9 UL F-C-2037 NTS

PERMIT REVIEW STAMP

ISSUE HISTORY

No.	Date	Description
1	02/08/2019	ISSUE FOR PERMIT

REVISION HISTORY

No.	Date	Description

© 2017 These documents and their contents are the property of FUGLEBERG KOCH - A026002103, and are issued only for the specific project noted on these drawings. Any reproductions, revisions, or modifications of these documents without the expressed written consent of Fugleberg Koch, is prohibited by law.

FUGLEBERG KOCH
2555 Temple Trail, Winter Park, FL 32789 (407) 629-0595
www.fuglebergkoch.com AA26002103
CONSULTANT

ARCHIVED COPY
STATE OF FLORIDA MICHAEL E. GOVE REGISTERED ARCHITECT AR94111
2/8/2019

SUMMER BAY APTS. II
LAKE COUNTY, FL

Drawn:	Author
Checked:	Checker
Approval:	Approver
Date:	Issue Date
Project #:	5389

UL REFERENCE DIRECTORY - FLOOR PENETRATIONS

A0.35

PLOTTED: 2/11/2019 2:28:59 PM

Design No. F-C-2355

December 08, 2008

F Ratings — 1 and 2 Hr (See Item 1)

T Ratings — 1 and 2 Hr (See Item 1)

L Rating At Ambient — Less Than 1 CFM/sq ft

L Rating At 400 F — Less Than 1 CFM/sq ft

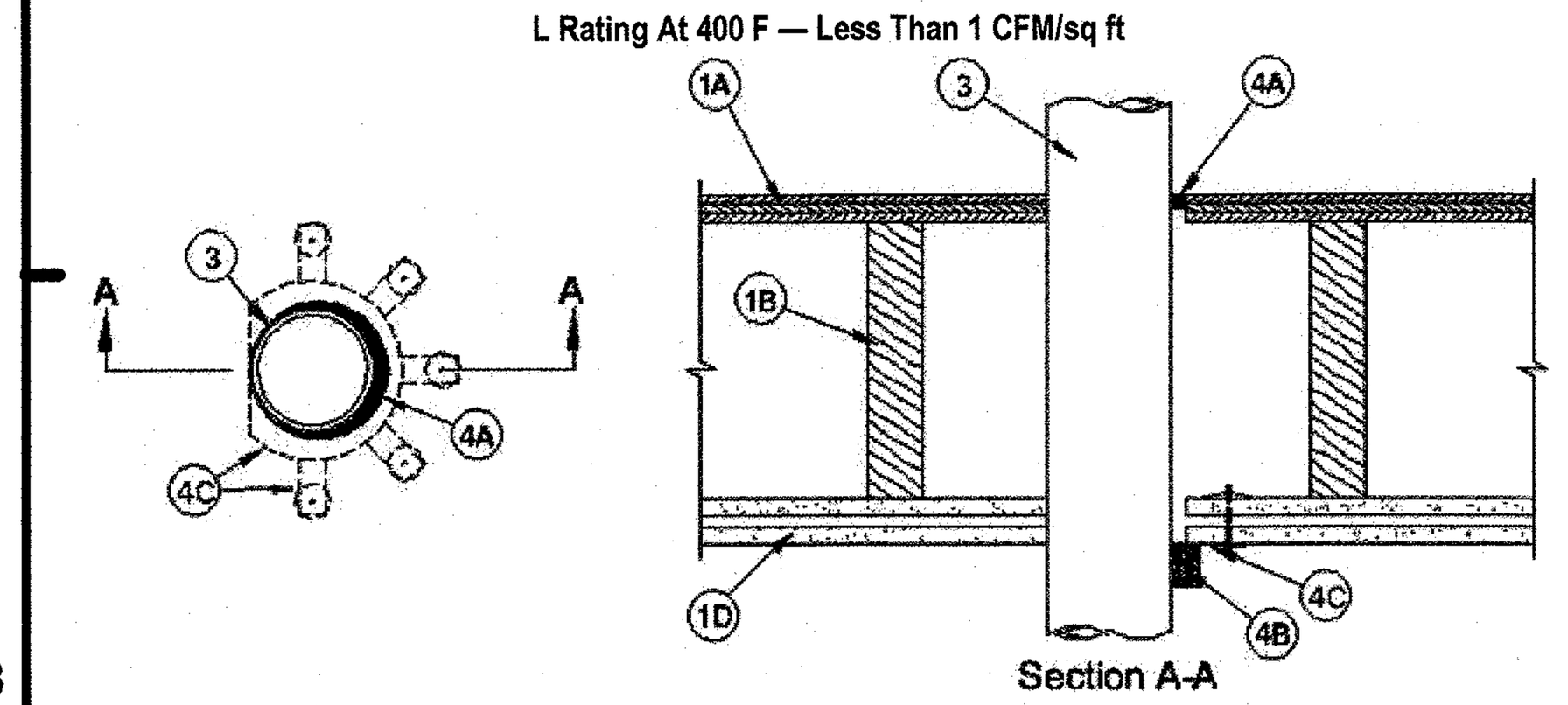

Section A-A

1. **Floor-Ceiling Assembly —** The 1 hr fire-rated solid or trussed lumber joist floor-ceiling assembly shall be constructed of the materials and in the manner specified in the individual L500 Series Floor-Ceiling Designs in the UL Fire Resistance Directory. The 2 hr fire-rated wood joist floor-ceiling assembly shall be constructed of the materials and in the manner specified in Design Nos. L505, L511 or L536 in the UL Fire Resistance Directory. The F and T Ratings of the firestop system are equal to the rating of the floor-ceiling assembly. The general construction features of the floor-ceiling assembly are summarized below:
A. **Flooring System —** Lumber or plywood subfloor with finish floor of lumber, plywood or **Floor Topping Mixture*** as specified in the individual Floor-Ceiling Design. Diam of opening hole-sawed in flooring shall be max 1/2 in. (13 mm) larger than diam of through penetrant (Item 3).
B. **Wood Joists* —** For 1 hr fire-rated floor-ceiling assemblies nom 10 in. deep (or deeper) lumber, steel or combination lumber and steel joists, trusses or **Structural Wood Members*** with bridging as required and with ends firestopped. For 2 hr fire-rated floor-ceiling assembly, nom 2 by 10 in. (51 by 250 mm) lumber joists spaced 16 in. (406 mm) OC with nom 1 by 3 in. (25 by 76 mm) lumber bridging with ends firestopped.
C. **Furring Channels —** (Not Shown)— Resilient galv steel furring installed perpendicular to wood joists between first and second layers of gypsum board (Item 1D) in 2 hr fire-rated assembly.
D **Gypsum Board* —** Nom 4 ft (1.2 m) wide by 5/8 in. (16 mm) thick as specified in the individual Floor-Ceiling Design. First layer of gypsum board nailed to wood joists. Second layer of gypsum board (2 hr fire-rated assembly) screw-attached to furring channels. Diam of opening shall be max 1/2 in. (13 mm) larger than nom diam of through penetrant (Item 3).
2. **Chase Wall —** (Optional, Not Shown)—The through-penetrant (Item 3) may be routed through a 1 or 2 hr fire-rated single, double or staggered wood stud/gypsum board chase wall constructed of the materials and in the manner specified in the individual U300 Series Wall and Partition Designs in the UL Fire Resistance Directory and which includes the following construction features:
A. **Studs —** Nom 2 by 6 in. (51 by 152 mm) or double nom 2 by 4 in. (51 by 102 mm) lumber studs.
B. **Sole Plate —** Nom 2 by 6 in. (51 by 152 mm) or parallel 2 by 4 in. (51 by 102 mm) lumber plates, tightly butted. Diam of opening hole-sawed in sole plate to be max 1/2 in. (13 mm) larger than diam of through penetrant (Item 3).
C. **Top Plate —** The double top plate shall consist of two nom 2 by 6 in. (51 by 152 mm) or two sets of parallel 2 by 4 in. (51 by 102 mm) lumber plates, tightly butted. Diam of opening shall be max 1/2 in. (13 mm) larger than diam of through penetrant (Item 3).
D. **Gypsum Board* —** Thickness, type, number of layers and fasteners shall be as specified in the individual Wall or Partition Design.
3 **Through Penetrants —** One nonmetallic pipe or conduit to be installed either concentrically or eccentrically within the firestop system. The annular space between the pipe or conduit and the periphery of the opening shall be min 0 in. (0 mm, point contact) to a max 1/2 in. (13 mm). Pipe or conduit to be rigidly supported on both sides of floor-ceiling. The following types and sizes of pipes or conduits may be used:
A. **Polyvinyl Chloride (PVC) Pipe —** Nom 4 in. (102 mm) diam (or smaller) Schedule 40 cellular or solid core PVC pipe for use in closed (process or supply) or vented (drain, waste, or vent) piping systems.
B. **Chlorinated Polyvinyl Chloride (CPVC) Pipe —** Nom 4 in. (102 mm) diam (or smaller) SDR 13.5 CVPC pipe for use in closed (process or supply) piping systems.
C. **Acrylonitrile Butadiene Styrene (ABS) Pipe —** Nom 4 in. (102 mm) diam (or smaller) Schedule 40 cellular core or solid core ABS pipe for use in closed (process or supply) or vented (drain, waste or vent) piping system.
D. **Rigid Nonmetallic Conduit+ —** Nom 3 in. (76 mm) diam (or smaller) Schedule 40 PVC conduit installed in accordance with the National Electrical Code, (NFPA No. 70).
4. **Firestop System —** The firestop system shall consist of the following:
A. **Fill, Void or Cavity Material* — Sealant —** Min 3/8 in. (10 mm) thickness of fill material applied within the annulus, flush with top surface of floor or sole plate.
SPECIFIED TECHNOLOGIES INC — SpecSeal Series SSS Sealant or SpecSeal LCI Sealant
B. **Fill, Void or Cavity Material* — Wrap Strip —** Nom 1/8 in. (3.2 mm) or 3/16 in. (4.8 mm) thick intumescent material faced on both sides with a plastic film, supplied in 1-1/2 in. or 2 in. (51 mm) wide strips or nom 1/4 in. (6 mm) thick intumescent material faced on both sides with a plastic film, supplied in 1-1/2 in. (38 mm) wide strips. For nom 1-1/2 in. (38 mm) and 2 in. (51 mm) diam pipes/conduits, a min of two layers of wrap strip are required. For nom 2-1/2 in. (64 mm) or 3 in. (76 mm) diam pipes/conduits, a min of three layers of wrap strip are required. For nom 3-1/2 in (89 mm) and 4 in. (102 mm) diam pipes/conduits, a min of four layers of wrap strip are required. The layers of wrap strip are to be eccentrically installed such that the layers do not completely encircle the penetrant. The layers are wrapped around the penetrant flush with bottom surface of ceiling or top plate such that the ends butt up to the tangent of the periphery of the opening at the point contact location. Layers of wrap strip temporarily held in place with tape.
SPECIFIED TECHNOLOGIES INC — SpecSeal RED Wrap Strip, SpecSeal BLU Wrap Strip or SpecSeal BLU2 Wrap Strip
C. **Steel Collar —** Collar fabricated from coils of precut 0.016 in. (4 mm) thick (No. 30 MSG) galv sheet steel available from wrap strip manufacturer. Collar shall be nom 1-1/2 in. (38 mm) or 2 in. (51 mm) deep (dependent upon width of wrap strip) with min four 1 in. (25 mm) wide by 2 in. (51 mm) long anchor tabs for attachment to the ceiling or top plate. Retainer tabs, 3/4 in. (19 mm) wide tapering down to 3/8 in. (10 mm) wide and located opposite the anchor tabs, are folded 90 degree toward through-penetrant surface to maintain the annular space around the through-penetrant and to retain the wrap strips. Steel collar wrapped around wrap strips and through penetrant with a 1 in. (25 mm) wide overlap along its perimeter joint. Steel collar tightened around wrap strips and through penetrant using min 1/2 in. (13 mm) wide by 0.028 in. (7 mm) thick stainless steel hose clamp installed at midheight of the collar or using three symmetrically located No. 8 steel sheet metal screws. Collar secured to gypsum board surface with 1/8 in. (3 mm) diam steel hollow wall anchors in conjunction with min 1 in. (25 mm) diam steel fender washers installed symmetrically opposite the point contact location. When installed inside chase wall, the collar is fastened to the top plate with nom 3/4 in. (19 mm) long steel wood screws in conjunction with nom 1 in. (25 mm) diam steel fender washers. The number of fasteners used is dependent upon the nom diam of the through penetrant. Two fasteners, symmetrically located, are required for nom 1-1/2 in (38 mm) and 2 in. (51 mm) diam through penetrants. Three fasteners, symmetrically located, are required for nom 2-1/2 in. (64 mm) and 3 in. (76 mm) diam through penetrants. Five fasteners, symmetrically located, are required for nom 3-1/2 in. (89 mm) and 4 in. (102 mm) diam through penetrants.

*Bearing the UL Classification Mark

+Bearing the UL Listing Mark

Last Updated on 2008-12-08

H1 UL F-C-2355
NTS

Design No. F-C-2368

December 27, 2007

F Rating — 1 Hr

T Rating — 1 Hr

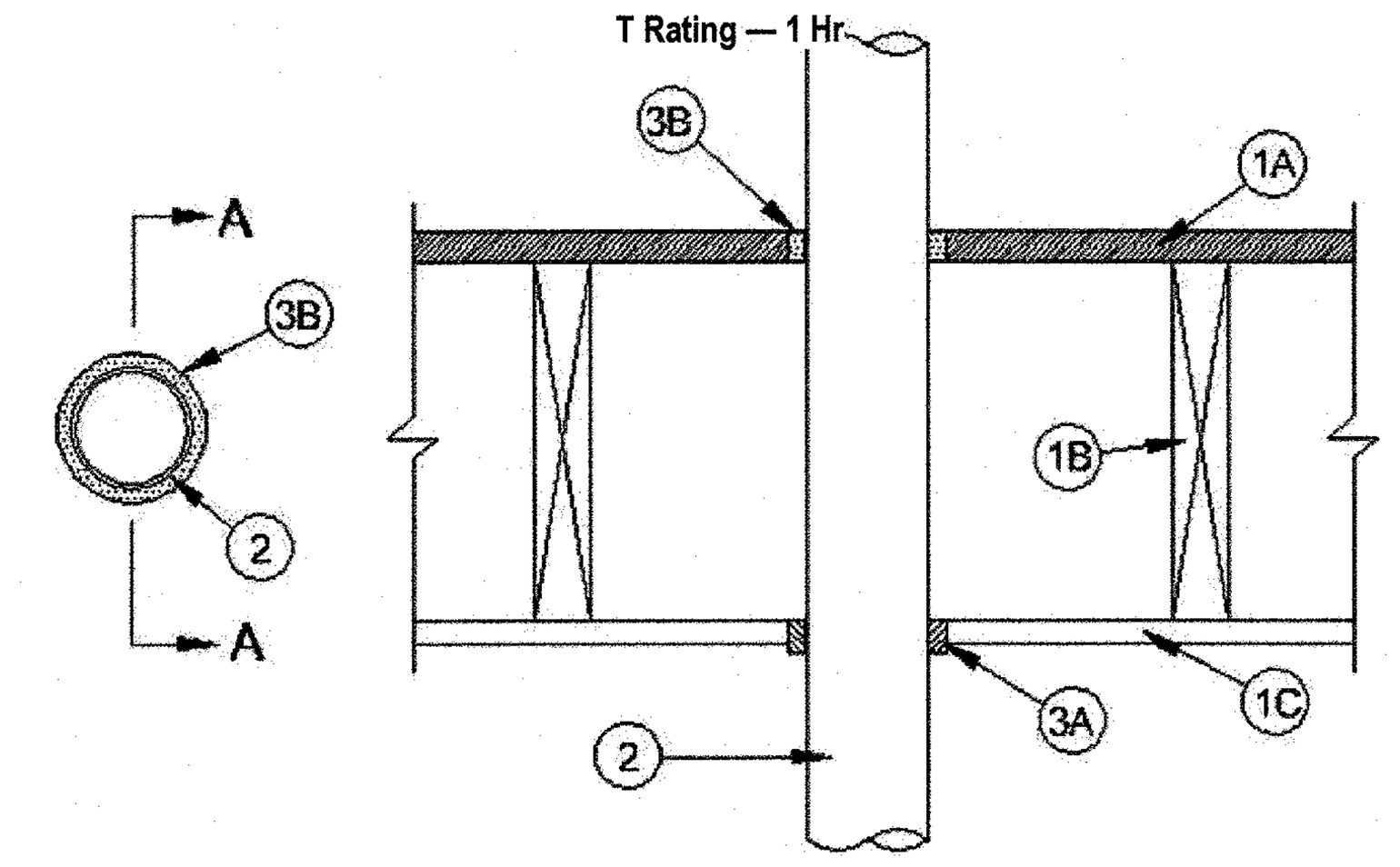

SECTION A-A

1. **Floor - Ceiling Assembly —** The 1 hr fire-rated wood joist floor-ceiling assembly shall be constructed of the materials and in the manner specified in the individual L500 Designs in the UL Fire Resistance Directory, as summarized below:
A. **Flooring System —** Lumber or plywood subfloor with finish floor of lumber, plywood or **Floor Topping Mixture*** as specified in the individual Floor-Ceiling Design. Max diam of floor opening is 4 in. (102 mm).
B. **Wood Joists —** Nom 10 in. (254 mm) deep (or deeper) lumber, steel or combination lumber and steel joists, trusses or **Structural Wood Members*** with bridging as required and with ends firestopped.
C. **Gypsum Board* —** Nom 5/8 in. (16 mm) thick as specified in the individual Floor-Ceiling Design. Wallboard secured to joists as specified in the individual Floor-Ceiling Design. Max diam of ceiling opening is 4 in. (102 mm).

2. **Through Penetrants —** One nonmetallic pipe to be centered within the firestop system. The annular space between pipe and periphery of opening shall be nom 1/4 in. Pipe to be rigidly supported on both sides of floor assembly. The following types and sizes of nonmetallic pipes may be used:
A. **Polyvinyl Chloride (PVC) Pipe —** Nom 3 in. (76mm) Schedule 40 solid core PVC or cellular core PVC (ccPVC) pipe for use in closed (process or supply) or vented (drain, waste or vent) piping systems.
B. **Acrylonitrile Butadiene Styrene (ABS) Pipe —** Nom 3 in. (76mm) Schedule 40 solid core ABS or cellular core ABS (ccABS) for use in closed (process or supply) or vented (drain, waste or vent) piping systems.

3. **Firestop System —** The firestop system shall consist of the following:
A. **Fill, Void or Cavity Material* - Wrap Strip —** One layer of nom 1/4 in. thick by 2 in. wide intumescent wrap strip tightly wrapped around the outer circumference of the pipe with ends butted and held in place with foil tape. Wrap strip slid into the annular space with the bottom edge of the wrap strip extending 1/4 in. below gypsum board ceiling.
RECTORSEAL — Biostop Wrap Strip
B. **Fill, Void or Cavity Material* - Caulk —** Min 3/4 in. (19 mm) thickness of fill material applied within annulus, flush with top surface of floor.
RECTORSEAL — Biostop 500+

*Bearing the UL Classification Mark

Last Updated on 2007-12-27

H3 UL F-C-2368
NTS

Design No. F-C-3012

January 20, 2015

ANSI/UL1479 (ASTM E814)	CAN/ULC S115
F Ratings — 1 and 2 Hr (See Item 1)	F Ratings — 1 and 2 Hr (See Item 1)
T Ratings — 0, 1 and 1-3/4 Hr (See Item 3)	FT Ratings — 0, 1 and 1-3/4 Hr (See Item 3)
	FH Ratings — 1 and 2 Hr (See Item 1)
	FTH Ratings — 0, 1 and 1-3/4 Hr (See Item 3)

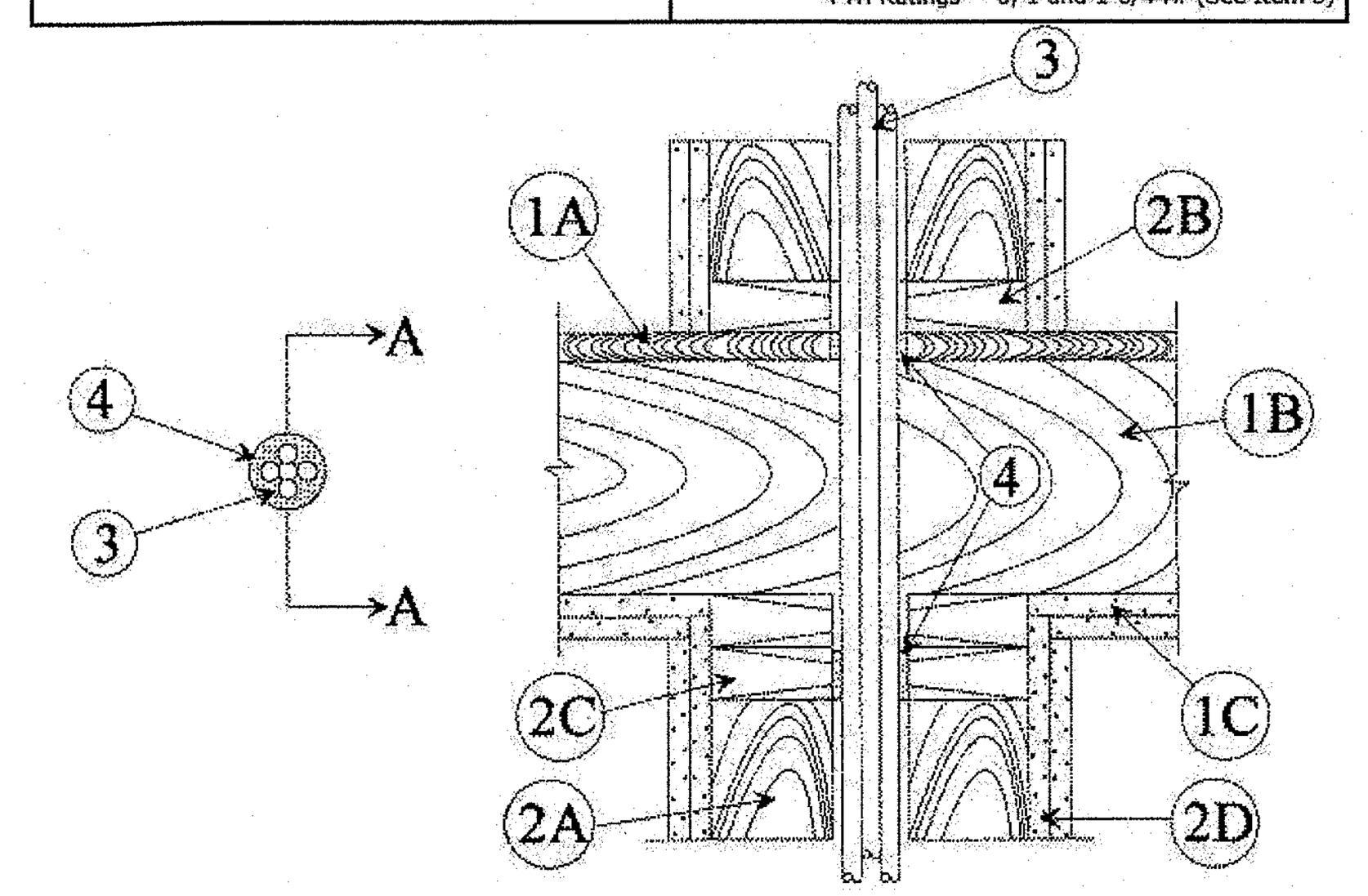

SECTION A-A

1. **Floor-Ceiling Assembly —** The 1 or 2 hr fire-rated solid or trussed lumber joist floor-ceiling assembly shall be constructed of the materials and in the manner specified in the individual L500 Series Floor-Ceiling Designs in the UL Fire Resistance Directory. The general construction features of the floor-ceiling assembly are summarized below:

A. **Flooring System —** Lumber or plywood subfloor with finish floor of lumber, plywood or **Floor Topping Mixture*** as specified in the individual Floor-Ceiling Design. Max diam of opening for 1 or 2 hr assembly is 2-1/2 in. (64 mm) or 2 in. (51 mm), respectively.
B. **Wood Joists* —** Nom 10 in. (254 mm) deep (or deeper) lumber, steel or combination lumber and steel joists, trusses or **Structural Wood Members*** with bridging as required and with ends firestopped.
C. **Furring Channels —** (Not Shown) — (As required) - Resilient galvanized steel furring installed in accordance with the manner specified in the individual L500 Series Designs in the Fire Resistance Directory.
D. **Gypsum Board* —** Thickness, type, number of layers and fasteners shall be as specified in the individual Floor-Ceiling Design. Max diam of opening for 1 or 2 hr assembly is 2-1/2 in. (64 mm) or 2 in. (51 mm), respectively.
The F Rating of the firestop system is equal to the rating of the floor-ceiling assembly.

2. **Chase Wall —** (Optional) - The through penetrant (Item 3) shall be routed through a fire-rated single, double or staggered wood stud/gypsum wallboard chase wall having a fire rating consistent with that of the floor-ceiling assembly. The chase wall shall be constructed of the materials and in the manner specified in the individual U300 Series Wall and Partition Designs in the UL Fire Resistance Directory and shall include the following construction features:
A. **Studs —** Nom 2 by 6 in. (51 by 152 mm) or double nom 2 by 4 in. (51 by 102 mm) lumber studs.
B. **Sole Plate —** Nom 2 by 6 in. (51 by 152 mm) or parallel 2 by 4 in. (51 by 102 mm) lumber plates, tightly butted. Max diam of opening for 1 or 2 hr rated assembly is 2-1/2 in. (64 mm) or 2 in. (51 mm), respectively.
C. **Top Plate —** The double top plate shall consist of two nom 2 by 6 in. (51 by 152 mm) or two sets of parallel 2 by 4 in. (51 by 102 mm) lumber plates, tightly butted. Max diam of opening for 1 or 2 hr rated assembly is 2-1/2 in. (64 mm) or 2 in. (51 mm), respectively.
D. **Gypsum Board* —** Thickness, type, number of layers and fasteners shall be as specified in individual Wall and Partition Design.

3. **Cables —** In 1 hr fire-rated assemblies, aggregate cross-sectional area of cables in opening to be max 45 percent of the cross-sectional area of the opening (max 2 in. (51 mm) diam bundle). Cables to be rigidly supported on both sides of floor assembly. Any combination of the following types and sizes of copper conductors may be used:

A. RG 59 coaxial cable with single copper conductor, cellular polyethylene cellular foam insulation and polyvinyl chloride (PVC) jacket.
B. Max 8/C No. 22 AWG telephone cable with polyvinyl chloride (PVC) jacketing.
C. Max 2/C No. 12 AWG cable with polyvinyl chloride (PVC) insulation and jacketing.
D. Max 3/C with ground No. 2/0 AWG aluminum or copper Type SER cable with polyvinyl chloride (PVC) insulation.
E. Max 3/C with ground No. 2/0 AWG Type NM cable with polyvinyl chloride (PVC) insulation.
F. Max 3/C No. 12 AWG MC (BX) cable with polyvinyl chloride (PVC) insulation.
G. Max 1 in. diam metal clad TEK cable with PVC jacket.
H. Max 4/C with ground No. 300 kcmil (or smaller) aluminum SER cable with PVC insulation and jacket.
I. **Through Penetrating Product*** - Any cables, **Metal-Clad Cable+** or **Armored Cable+** currently Classified under the **Through Penetrating Products** category.
See **Through Penetrating Product** (XHLY) category in the Fire Resistance Directory for names of manufacturers.
The T Rating is 1 and 1-3/4 hr for 1 and 2 hr rated assemblies, respectively, for cables 3A through 3G. The T Rating is 0 hr for cables 3H and 3I.

4. **Fill, Void or Cavity Material* — Sealant —** Min 3/4 in. (19 mm) thickness of fill material applied within the annulus, flush with top surface of floor or sole plate. Min 5/8 in. (16 mm) thickness of fill material also applied within the annulus, flush with bottom surface of ceiling or lower top plate.

HILTI CONSTRUCTION CHEMICALS, DIV OF HILTI INC — FS611A Sealant or FS-One Sealant or FS-ONE MAX Intumescent Sealant

*** Indicates such products shall bear the UL or cUL Certification Mark for jurisdictions employing the UL or cUL Certification (such as Canada), respectively.**

Last Updated on 2015-01-20

H5 UL F-C-3012
NTS

Design No. F-C-7002

December 08, 2008

F Rating — 1 Hr

T Rating — 3/4 Hr

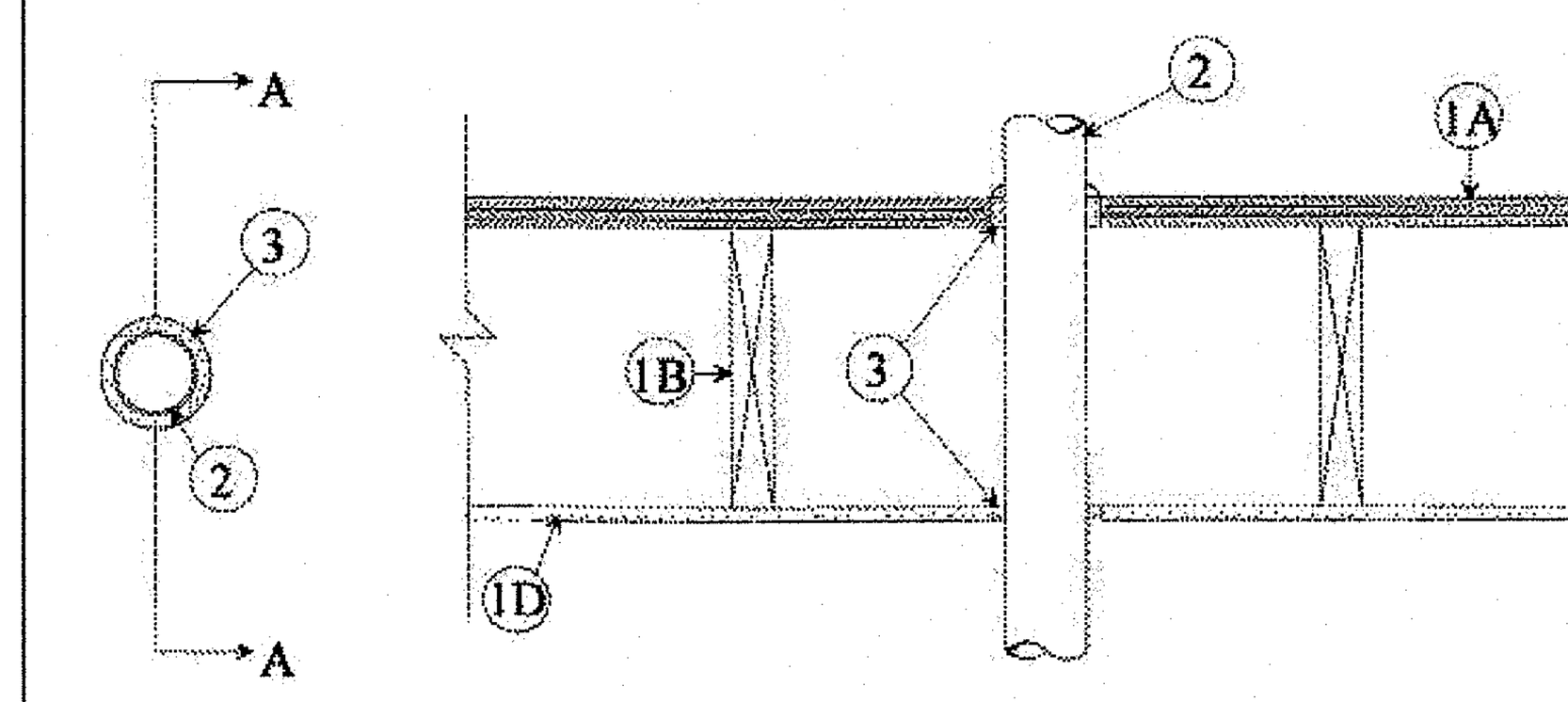

SECTION A-A

1. **Floor-Ceiling Assembly —** The 1 hr fire-rated solid or trussed lumber joist floor-ceiling assembly shall be constructed of the materials and in the manner specified in the individual L500 Series Floor-Ceiling Designs in the UL Fire Resistance Directory, as summarized below:

A. **Flooring System —** Lumber or plywood subfloor with finish floor of lumber, plywood or **Floor Topping Mixture*** as specified in the individual Floor-Ceiling Design. Max diam of floor opening is 5 in.
B. **Wood Joists —** Nom 2 by 10 in. lumber joists spaced 16 in. OC with nom 1 by 3 in. lumber bridging and with ends firestopped. As an alternate to lumber joists, nom 10 in. deep (or deeper) lumber, steel or combination lumber and steel joists, trusses or **Structural Wood Members*** with bridging as required with ends firestopped.
C. **Furring Channels —** (Not Shown) — Resilient galv steel furring installed perpendicular to wood joists (Item 1B) between wallboard (Item 1D) and wood joists or furring channels as required in the individual Floor-Ceiling Design.
D. **Gypsum Board* —** Nom 4 ft wide by 5/8 in. thick as specified in the individual Floor-Ceiling Design. Wallboard secured to wood joists or furring channels as specified in the individual Floor-Ceiling Design. Max diam of ceiling opening is 5 in.

1.1 **Chase Wall —** (Not Shown, optional) The through penetrant (Item 2) may be routed through a 1 hr fire-rated single, double or staggered wood stud/gypsum wallboard chase wall constructed of the materials and in the manner specified in the individual U300 Series Wall and Partition Designs in the UL Fire Resistance Directory and shall include the following construction features:

A. **Studs —** Nom 2 by 6 in. or double nom 2 by 4 in. lumber studs.
B. **Sole Plate —** Nom 2 by 6 in. or parallel 2 by 4 in. lumber plates, tightly butted.
C. **Top Plate —** The double top plate shall consist of two nom by 6 in. or two sets of parallel 2 by 4 in. lumber plates, tightly butted. Max diam of opening is 5 in.
D. **Gypsum Board* —** Thickness, type, number of layers and fasteners shall be as specified in individual Wall and Partition Design.

2. **Steel Duct —** Nom 4 in. diam (or smaller) No. 30 gauge (or heavier) steel duct. One duct to be centered within the firestop system. Diam of openings hole-sawed through flooring system and through gypsum wallboard ceiling to the nom 1/2 in. larger than the outside diam of through-penetrant. Steel duct to be rigidly supported on both sides of floor-ceiling assembly.

3. **Fill, Void or Cavity Material* — Sealant —** Min 3/4 in. thickness of fill material applied within annulus on top surface of floor. Min 5/8 in. thickness of fill material applied within annulus on bottom surface of ceiling or lower top plate of chase wall assembly. Additional fill material to be installed such that a min 1/8 in. crown is formed around the penetrating item on bottom surface of ceiling or lower top plate of chase wall assembly.

SPECIFIED TECHNOLOGIES INC — SpecSeal Series SSS Sealant or SpecSeal LCI Sealant

*** Indicates such products shall bear the UL or cUL Certification Mark for jurisdictions employing the UL or cUL Certification (such as Canada), respectively.**

Last Updated on 2008-12-08

H7 UL F-C-7002
NTS

Design No. F-C-8009

January 21, 2015

ANSI/UL1479 (ASTM E814)	CAN/ULC S115
F Rating — 1 Hr	F Rating — 1 Hr
T Rating — 1 Hr	FT Rating — 1 Hr
	FH Rating — 1 Hr
	FTH Rating — 1 Hr

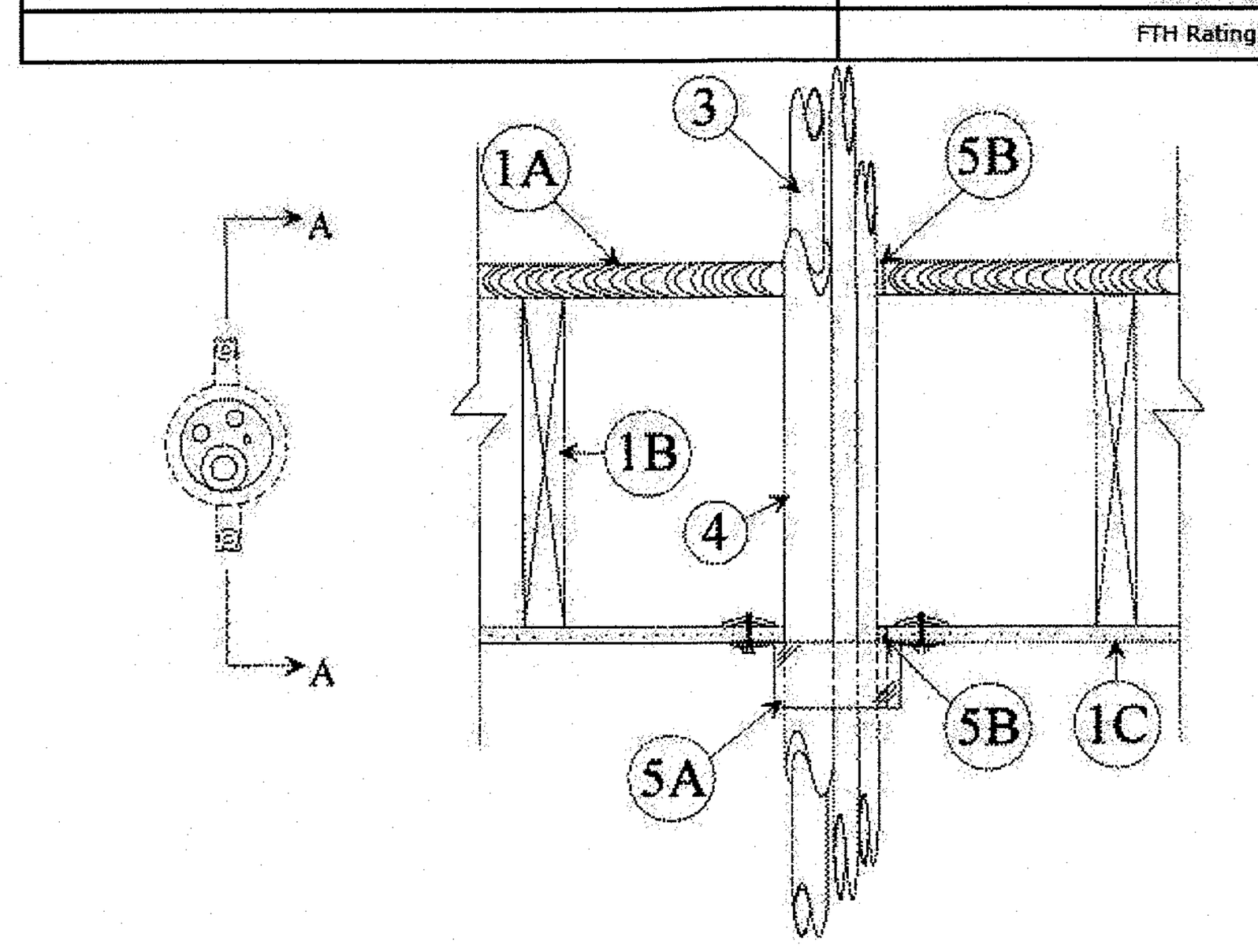

SECTION A-A

System tested with a pressure differential of 2.5 Pa between the exposed and the unexposed surfaces with the higher pressure on the exposed side.

1. **Floor-Ceiling Assembly —** The 1 hr fire-rated wood joist floor-ceiling assembly shall be constructed of the materials and in the manner specified in the individual L500 Series Floor-Ceiling Designs in the UL Fire Resistance Directory, as summarized below:

A. **Flooring System —** Lumber or plywood subfloor with finish floor of lumber, plywood or **Floor Topping Mixture*** as specified in the individual Floor-Ceiling Design. Max diam of opening is 3 in. (76 mm).
B. **Wood Joists —** Nom 10 in. (254 mm) deep (or deeper) lumber, steel or combination lumber and steel joists, trusses or **Structural Wood Members*** with bridging as required and with ends firestopped.
C. **Gypsum Board* —** Thickness, type, number of layers and fasteners shall be as specified in the individual Floor-Ceiling Design. Max diam of opening in ceiling [when chase wall (Item 2) is not provided] is 3 in. (76 mm).

2. **Chase Wall —** (Optional, Not Shown) — The through penetrant (Item 3) may be routed through a 1 hr fire-rated single, double or staggered wood stud/gypsum wallboard chase wall constructed of the materials and in the manner specified in the individual U300 Series Wall and Partition Designs in the UL Fire Resistance Directory and shall include the following construction features:

A. **Studs —** Nom 2 by 6 in. (51 by 152 mm) lumber or double nom 2 by 4 in. (51 by 102 mm) lumber studs.
B. **Sole Plate —** Nom 2 by 6 in. (51 by 152 mm) lumber or parallel 2 by 4 in. (51 by 102 mm) lumber plates, tightly butted. Max diam of opening shall be 3 in. (76 mm).
C. **Top Plate —** The double top plate shall consist of two nom 2 by 6 in. (51 by 152 mm) lumber plates or 2 sets of parallel nom 2 by 4 in. (51 by 102 mm) lumber, tightly butted. Max diam of opening is 3 in. (76 mm).
D. **Gypsum Board* —** Thickness, type, number of layers and fasteners shall be as specified in individual Wall and Partition Design.

3. **Through Penetrants —** Pipe, cable and tubing to be bundled and rigidly supported on both sides of floor assembly. A nom annular space of min 0 in. (point contact) to max 1/2 in. (13 mm) is required within the firestop system. The following types and sizes of pipe, cable and tubing are to be used in the firestop system in sufficient quantities to fill the firestop device:

A. **Cable —** Type PJT thermoset cable, 5/C No. 18 AWG copper conductor, plastic insulation and jacket.
B. **Polyvinyl Chloride (PVC) Pipe —** Nom 1-1/2 in. (38 mm) diam (or smaller) Schedule 40 solid core PVC pipe for use in closed (process or supply) or vented (drain, waste or vent) piping systems.
C. **Copper Tubing —** Nom 3/4 in. (19 mm) diam (or smaller) Type L (or heavier) copper tubing.
D. **Copper Tubing —** Nom 1/2 in. (13 mm) diam (or smaller) Type L (or heavier) copper tubing.

4. **Tube Insulation — Plastics+ —** Nom 1/2 in. (13 mm) thick acrylonitrile butadiene/polyvinyl chloride (AB/PVC) flexible foam furnished in the form of tubing. Insulation to be installed only on one through reverant having a max nom diam of 3/4 in. (19 mm).
See **Plastics+** (QMFZ2) category in the Recognized Component Directory for names of manufacturers. Any Recognized Component tube insulation material meeting the above specifications and having a UL94 Flammability Classification of 94-5VA may be used.

5. **Firestop System —** The firestop system shall consist of the following:

A. **Firestop Device* — Firestop Collar —** Firestop collar shall be installed in accordance with the accompanying installation instructions. Collar to be installed and latched around the penetrants and secured to underside of gypsum wallboard ceiling using the anchor hooks provided with the collar. The anchor hooks are to be secured to the surface of the ceiling with min 3/16 in. diam min 2-1/2 in. long toggle bolts.

HILTI CONSTRUCTION CHEMICALS, DIV OF HILTI INC — CP 64-3 90/3"N, CP 64-3 63/2"N, CP 64-3 50/1-1/2"N .

B. **Fill, Void or Cavity Material* — Sealant —** Min 3/4 in. (19 mm) thickness of fill material applied within the annulus, flush with top surface of floor or sole plate. Min 5/8 in. (16 mm) thickness of fill material applied within the annulus, flush with bottom surface of ceiling or lower top plate. Caulk to be forced into interstices of penetration group to max extent possible at top surface of floor or sole plate and bottom surface of ceiling or lower top plate.

HILTI CONSTRUCTION CHEMICALS, DIV OF HILTI INC — FS611A, FS-ONE Sealant or FS-ONE MAX Intumescent Sealant

+Bearing the UL Recognized Component Mark
*Bearing the UL Classification Marking

Last Updated on 2015-01-21

LAKE COUNTY BUILDING SERVICES
Any errors or omissions in these plans shall be made to conform with the applicable code requirements per Florida Building Code, in accordance with Section 107. Plans were reviewed for code compliance and shall be kept on job site.

RECEIVED FEB 14 2019

H9 UL F-C-8009
NTS

PERMIT REVIEW STAMP

ISSUE HISTORY

No.	Date	Description
1	02/08/2019	ISSUE FOR PERMIT

REVISION HISTORY

No.	Date	Description

FUGLEBERG KOCH

2555 Temple Trail, Winter Park, FL 32789 *(407) 629-0595*
www. fuglebergkoch.com *AA26002103*

CONSULTANT

MICHAEL E. GOVE
FLORIDA LICENSE # AR94111
STATE OF FLORIDA
MICHAEL E. GOVE
AR94111
REGISTERED ARCHITECT
02/08/2019

SUMMER BAY APTS. II	Drawn: Author
	Checked: Checker
	Approval: Approver
	Date: Issue Date
LAKE COUNTY, FL	Project #: 5389

UL REFERENCE DIRECTORY - FLOOR PENETRATIONS

A0.36

PLOTTED: 2/11/2019 2:29:03 PM

© 2017 These documents and their contents are the property of FUGLEBERG KOCH - AA26002103, and are issued only for the specific project noted on these drawings. Any reproductions, revisions, or modifications of these documents without the expressed written consent of Fugleberg Koch, is prohibited by law.

Design No. W-L-1085

January 23, 2015

ANSI/UL1479 (ASTM E814)	CAN/ULC S115
F Rating — 1 and 2 Hr (See Item 1B)	F Rating — 1 and 2 Hr (See Item 1B)
T Rating — 0 Hr	FT Rating — 0 Hr
L Rating At Ambient — Less Than 1 CFM/sq ft	FH Rating — 1 and 2 Hr (See Item 1B)
L Rating At 400 F — 4 CFM/sq ft	FTH Rating — 0 Hr

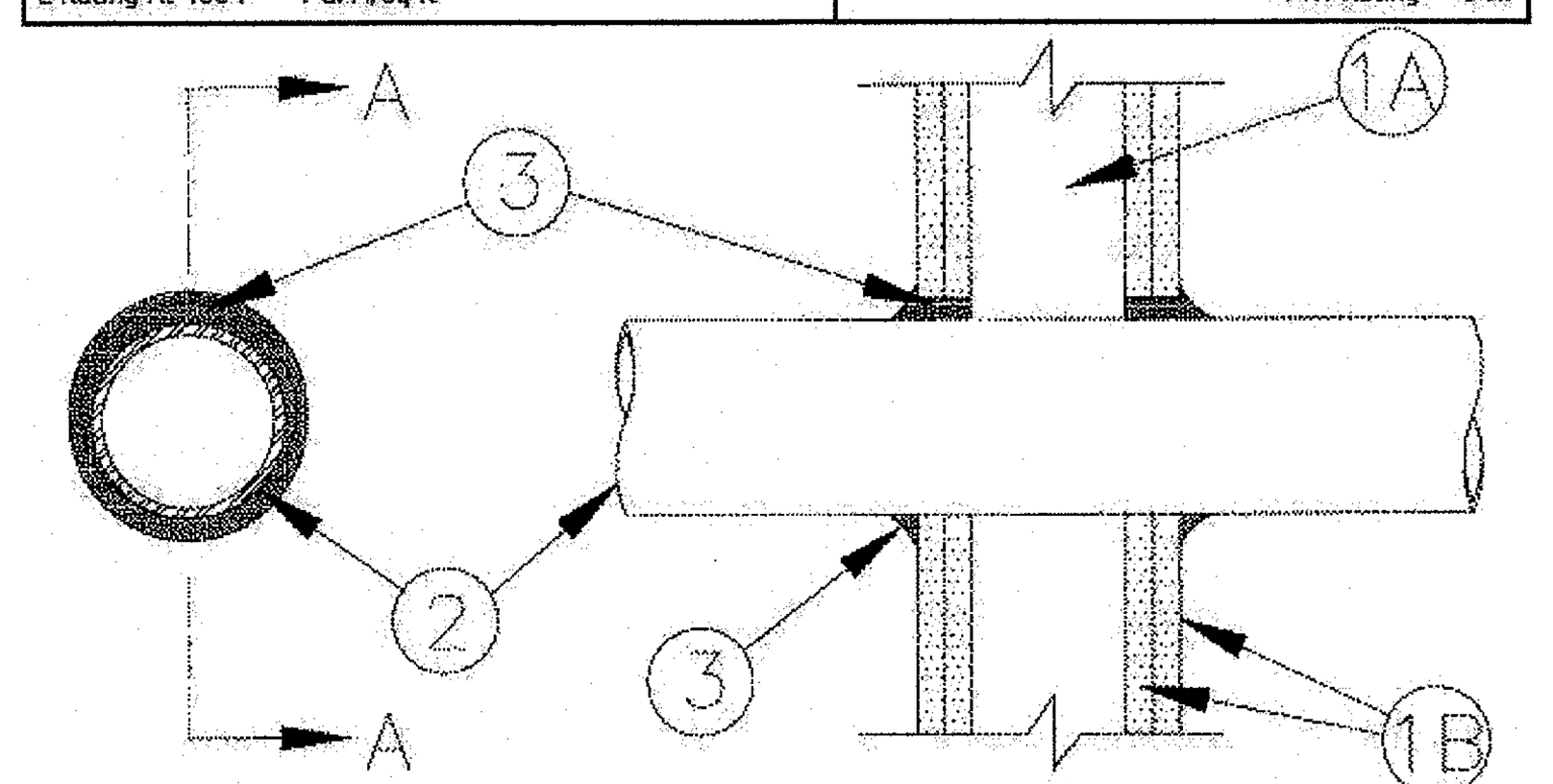

Section A–A

1. **Wall Assembly** — The 1 or 2 hr fire-rated gypsum wallboard/stud wall assembly shall be constructed of the materials and in the manner specified in the individual U300 or U400 Series Wall and Partition Designs in the UL Fire Resistance Directory and shall include the following construction features:

A. **Studs** — Wall framing may consist of either wood studs or steel channel studs. Wood studs to consist of nom 2 by 4 in. (51 by 102 mm) lumber spaced 16 in. (406 mm) OC. Steel studs to be min 2-1/2 in. (64 mm) wide and spaced max 24 in. (610 mm) OC.
B. **Gypsum Board*** — 5/8 in. (16 mm) thick, 4 ft (122 cm) wide with square or tapered edges. The gypsum wallboard type, number of layers, fastener type and sheet orientation shall be as specified in the individual Wall and Partition Design. Max diam of opening is 13-1/4 in. (337 mm).
Diam of circular opening cut through gypsum wallboard on each side of wall assembly to be min 1/4 in. (6 mm) to max 1/2 in. (13 mm) larger than outside diam of through penetrant (Item 2).

The hourly F and FH Ratings of the firestop system are equal to the hourly fire rating of the wall assembly in which it is installed.

2. **Through Penetrants** — One metallic pipe, conduit or tubing to be installed either concentrically or eccentrically within the firestop system. Pipe, conduit or tubing to be rigidly supported on both sides of wall assembly. The annular space between the through-penetrant and the periphery of the opening shall be min 0 in. to max 1/4 in. (6 mm). The following types and sizes of metallic pipes, conduits or tubing may be used:
A. **Steel Pipe** — Nom 12 in. (305 mm) diam (or smaller) Schedule 10 (or heavier) steel pipe.
B. **Iron Pipe** — Nom 12 in. (305 mm) diam (or smaller) cast or ductile iron pipe.
C. **Conduit** — Nom 6 in. (152 mm) diam (or smaller) steel electrical metallic tubing or steel conduit.
D. **Copper Tubing** — Nom 6 in. (152 mm) diam (or smaller) Type L (or heavier) copper tubing.
E. **Copper Pipe** — Nom 6 in. (152 mm) diam (or smaller) Regular (or heavier) copper pipe.

3. **Fill, Void or Cavity Material*** — **Sealant** — Fill material to be forced into the annulus to maximum extent possible. Additional fill material to be installed such that a min 1/2 in. (13 mm) crown is formed around the penetrating item and lapping 1/4 in. (6 mm) beyond the periphery of the opening.

HILTI CONSTRUCTION CHEMICALS, DIV OF HILTI INC — FS-One Sealant, FS-ONE MAX Intumescent Sealant

*** Indicates such products shall bear the UL or cUL Certification Mark for jurisdictions employing the UL or cUL Certification (such as Canada), respectively.**

D1 — UL W-L-1085 — NTS — Last Updated on 1999-11-24

Design No. W-L-2098

January 26, 2015

F Ratings — 1 and 2 Hr (See Item 1)

T Ratings — 1 and 2 Hr (See Item 1)

L Rating At Ambient — Less Than 1 CFM/Sq Ft

L Rating At 400 F — 4 CFM/Sq Ft

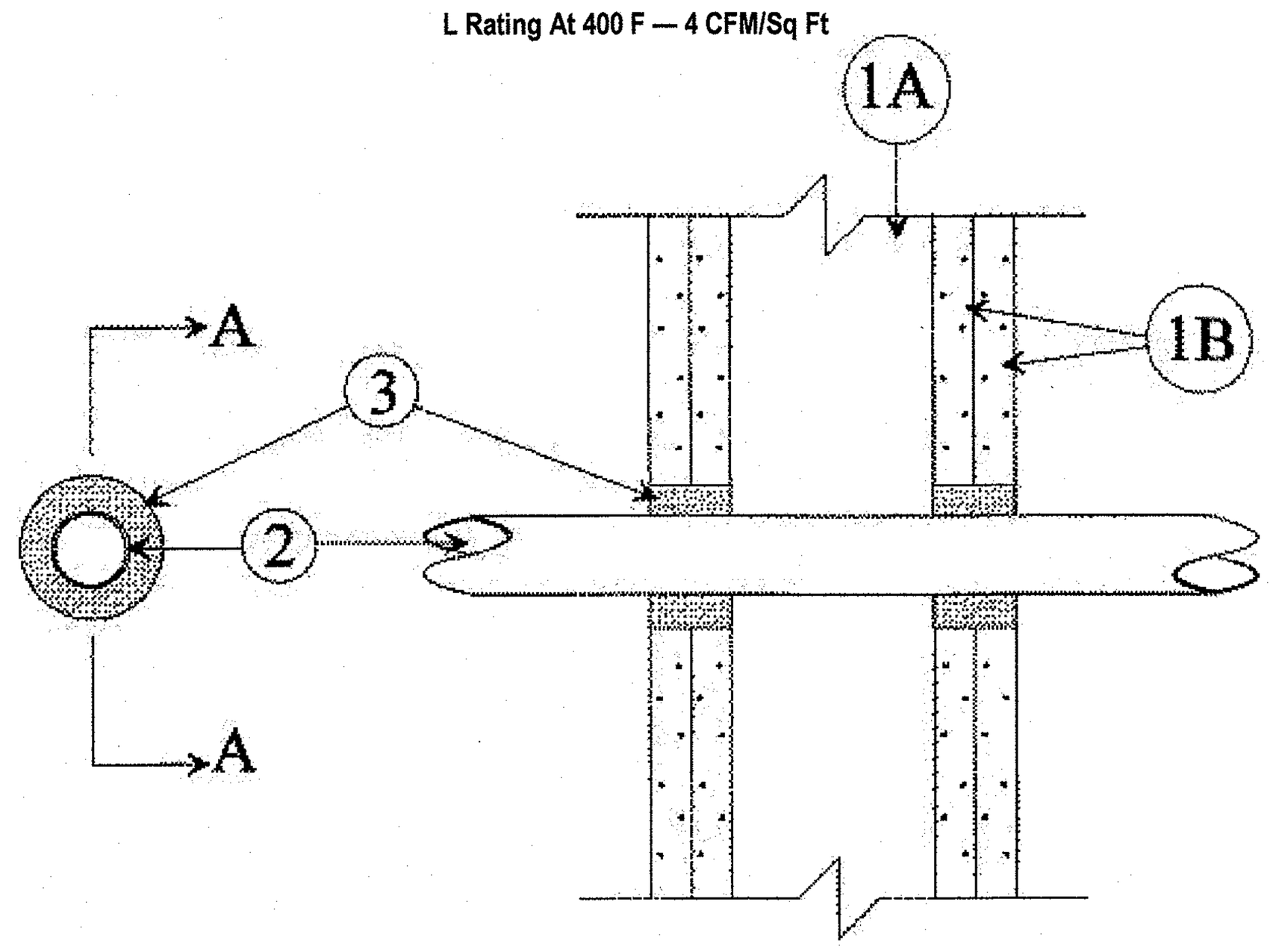

SECTION A-A

1. **Wall Assembly** — The fire-rated gypsum wallboard/stud wall assembly shall be constructed of the materials and in the manner specified in the individual U300 or U400 Series Wall and Partition Designs in the UL Fire Resistance Directory and shall include the following construction features:
A. **Studs** — Wall framing may consist of either wood studs or steel channel studs. Wood studs to consist of nom 2 by 4 in. lumber spaced 16 in. OC. Steel studs to be min 2-1/2 in. wide and spaced max 24 in. OC.
B. **Gypsum Board*** — 5/8 in. thick, 4 ft wide with square or tappered edges. The gypsum wallboard type, thickness, number of layers, fastener type and sheet orientation shall be as specified in the individual Wall and Partition Design. Max diam of opening is 4-3/8 in.
The hourly F and T Ratings of the firestop system are equal to the hourly fire rating of the wall assembly in which it is installed.
2. **Through Penetrants** — One nonmetallic pipe installed within the firestop system. Pipe to be rigidly supported on both sides of floor or wall assembly. The space between pipe and periphery of opening shall be min 3/4 in. to max 1-1/4 in. Pipe to be rigidly supported on both sides of the floor or wall assembly. The following types and sizes of nonmetallic pipes may be used:
A. **Polyvinyl Chloride (PVC) Pipe** — Nom 2 in. diam (or smaller) Schedule 40 PVC pipe for use in closed (process or supply) piping system.
B. **Chlorinated Polyvinyl Chloride (CPVC) Pipe** — Nom 2 in. diam (or smaller) SDR17 CPVC pipe for use in closed (process or supply) piping systems.
3. **Fill, Void or Cavity Materials*** — **Sealant** — Installed to completely fill the annular space between the pipes and gypsum wallboard on both sides of wall.
HILTI CONSTRUCTION CHEMICALS, DIV OF HILTI INC — FS-One Sealant

*** Indicates such products shall bear the UL or cUL Certification Mark for jurisdictions employing the UL or cUL Certification (such as Canada), respectively.**

Last Updated on 2003-01-09

H1 — UL W-L-2098 — NTS

Design No. W-L-2029

November 26, 2012

F Ratings — 1 and 2 Hr (See Items 1 and 3B)

T Ratings — 1, 1-1/2 and 2 Hr (See Item 3B)

L Rating At Ambient — 1 CFM/sq ft (See Item 3A)

L Rating At 400 F — Less Than 1 CFM/sq ft (See Item 3A)

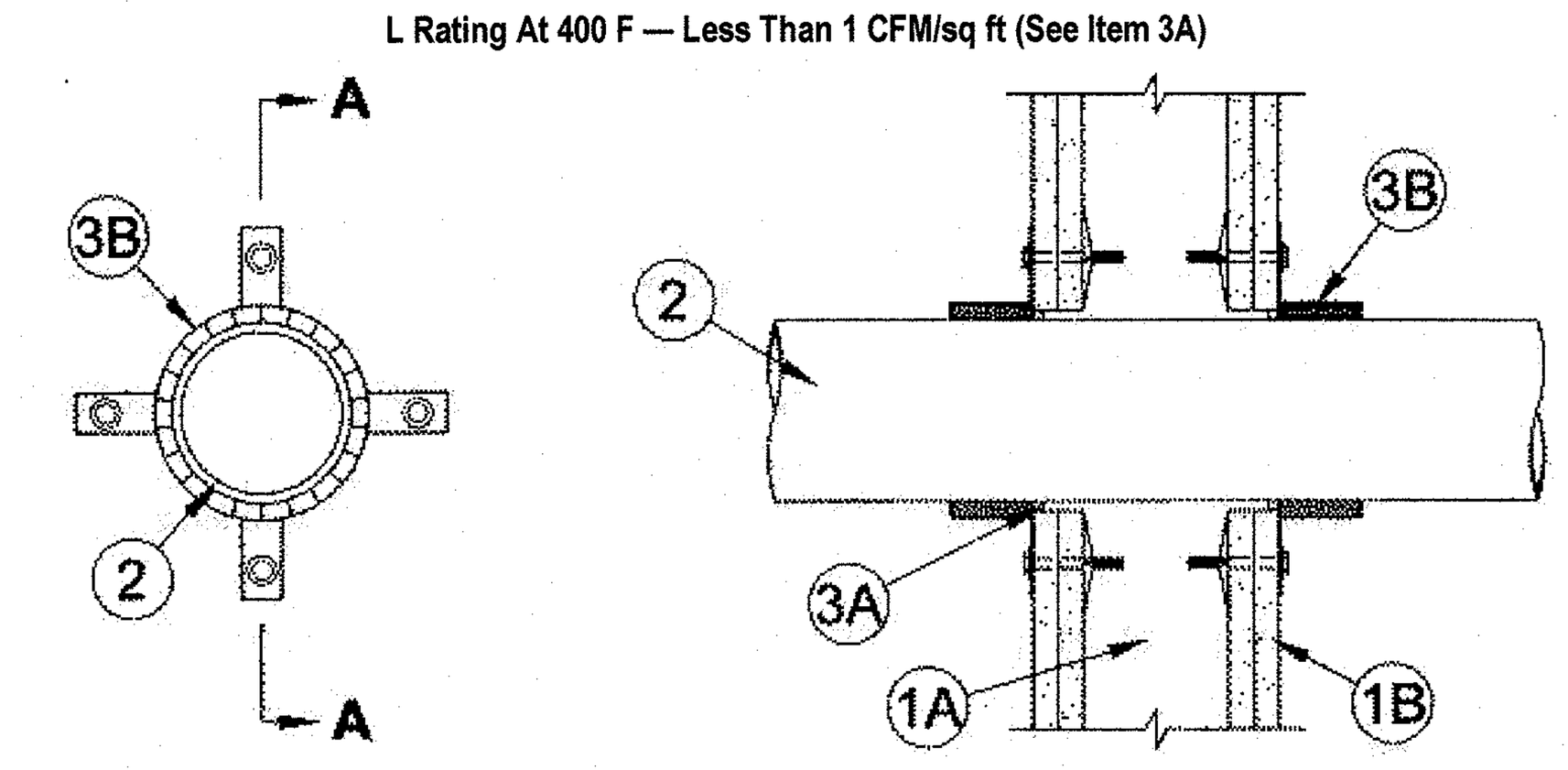

Section A-A

1. **Wall Assembly** — The 1 or 2 hr fire rated gypsum wallboard/stud wall assembly shall be constructed of the materials and in the manner described in the individual U300, U400 or V400 Series Wall and Partition Designs in the UL Fire Resistance Directory and shall include the following construction features:
A. **Studs** — Wall framing may consist of either wood studs or steel channel studs. Wood studs to consist of nom 2 by 4 in. (51 by 102 mm) lumber spaced 16 in. (406 mm) OC. Steel studs to be min 2-1/2 in. (64 mm) wide and spaced max 24 in. (610 mm) OC.
B. **Gypsum Board*** — 5/8 in. (16 mm) thick, 4 ft (1.2 m) wide with square or tapered edges. The gypsum board type, thickness, number of layers, fastener type and sheet orientation shall be as specified in the individual U300, U400 or V400 Series Design in the UL Fire Resistance Directory. Max diam of opening is 5 in. (127 mm).
The hourly F rating of the firestop system is equal to the hourly fire rating of the wall assembly in which it is installed.
2. **Through Penetrants** — One nonmetallic pipe or conduit to be centered within the firestop system. A nom annular space of 1/4 in. (6 mm) is required within the firestop system. Pipe or conduit to be rigidly supported on both sides of the wall assembly. The following types and sizes of nonmetallic pipes or conduits may be used:
A. **Polyvinyl Chloride (PVC) Pipe** — Nom 4 in. (102 mm) diam (or smaller) Schedule 40 solid or cellular core PVC pipe for use in closed (process or supply) or vented (drain, waste or vent) piping system.
B. **Rigid Nonmetallic Conduit+** — Nom 4 in. (102 mm) diam (or smaller) Schedule 40 or 80 PVC conduit installed in accordance with the National Electrical Code (NFPA No. 70).
C. **Chlorinated Polyvinyl Chloride (CPVC) Pipe** — Nom 4 in. (102 mm) diam (or smaller) SDR13.5 CPVC pipe for use in closed (process of supply) piping systems.
D. **Acrylonitrile Butadiene Styrene (ABS) Pipe** — Nom 4 in. (102 mm) diam (or smaller) Schedule 40 solid or foamed core ABS pipe for use in closed (process or supply) or vented (drain, waste or vent) piping systems.
E. **Fire Retardant Polypropylene (FRPP) Pipe** — Nom 4 in. (102 mm) diam (or smaller) Schedule 40 FRPP pipe for use in closed (process or supply) or vented (drain, waste or vent) piping systems.
3. **Firestop System** — The firestop system shall consist of the following:
A. **Fill, Void or Cavity Material*** — **Caulk** — (Optional) - Caulk forced into annular space to max extent possible. Caulk shall be installed flush with both surfaces of wall assembly. **L Ratings apply only when caulk is used.**
SPECIFIED TECHNOLOGIES INC — SpecSeal 100, 101, 102, 120, 129 or 105 Sealant, SpecSeal LCI Sealant, Pensil 300 Sealant or SpecSeal Series SIL300 Sealant
B. **Firestop Device*** — Galv steel collar lined with an intumescent material sized to fit the specific diam of the through-penetrant. Device shall be installed around through-penetrant in accordance with accompanying installation instructions. Device incorporates anchor tabs for securement to each surface of wall assembly by means of 1/8 in. (3 mm) diam by 1-3/4 in. (45 mm) long steel molly bolts in conjunction with 1/4 in. (6 mm) diam by 1-1/2 in. (38 mm) diam steel fender washers.
The F and T Rating of the firestop system is dependent upon the fire rating of the wall and size of the firestop device as tabulated below:

Fire Rating of Wall Hr	Nom Device Size In.	F Rating Hr	T Rating Hr
1	1-1/2	1	1
2	1-1/2	2	1-1/2
1	2	1	1
2	2	2	1-1/2
1	3	1	1
2	3	2	2
1	4	1	1
2	4	2	2

SPECIFIED TECHNOLOGIES INC — SpecSeal Firestop Collar, SpecSeal LCC Collar, or SpecSeal SSC Collar. When SpecSeal LCC Collar or SpecSeal SSC Collar are used, the max annular space shall be 1/8 in. (3 mm) for max 2-1/2 in. (64 mm) diam pipe and shall be max 1/4 in. (6 mm) for pipe larger than 2-1/2 in. (64 mm) diam. **The T Rating equals the hourly F Rating when SpecSeal LCC Collar is used.**

*** Indicates such products shall bear the UL or cUL Certification Mark for jurisdictions employing the UL or cUL Certification (such as Canada), respectively.**

Last Updated on 2012-11-26

H3 — UL W-L-2029 — NTS

Design No. W-L-3065

January 23, 2015

ANSI/UL1479 (ASTM E814)	CAN/ULC S115
F Rating — 1 and 2 Hr (See Item 1)	F Rating — 1 and 2 Hr (See Item 1)
T Rating — 0 and 3/4 Hr (See item 3)	FT Rating — 0 and 3/4 Hr (See item 3)
L Rating At Ambient — 15 CFM/sq ft	FH Rating — 1 and 2 Hr (See Item 1)
L Rating At 400 F — 8 CFM/sq ft	FTH Rating — 0 and 3/4 Hr (See item 3)
	L Rating At Ambient — 15 CFM/sq ft
	L Rating At 400 F — 8 CFM/sq ft

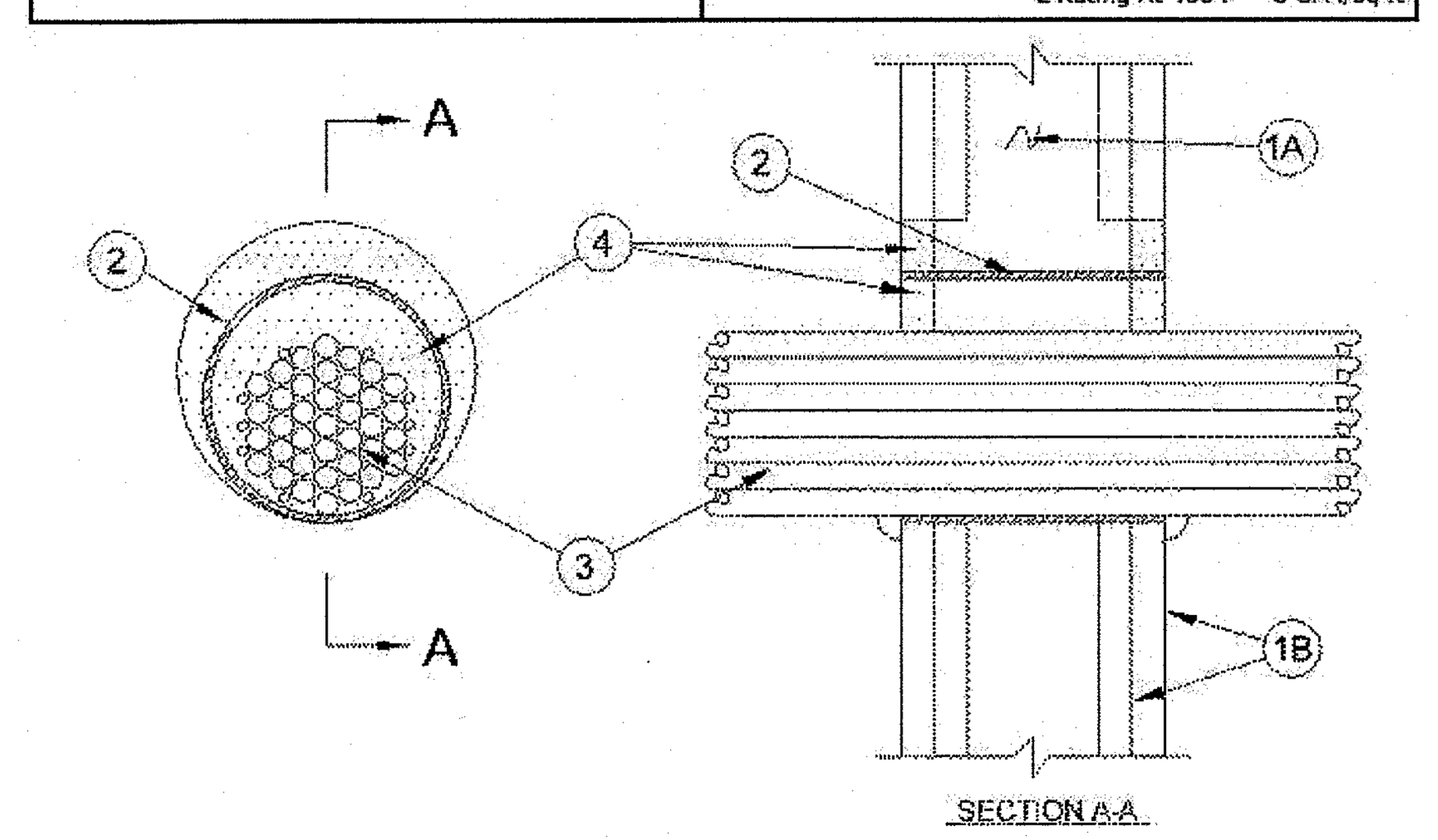

1. Wall Assembly — The 1 or 2 fire-rated gypsum wallboard/stud wall assembly shall be constructed of the materials and in the manner specified in the individual U300, U400, V400 or W400 Series Wall and Partition Designs in the UL Fire Resistance Directory and shall include the following construction features:

A. Studs — Wall framing may consist of either wood studs or steel channel studs. Wood studs to consist of nom 2 by 4 in. (51 by 102 mm) lumber spaced 16 in. (406 mm) OC. Steel studs to be min 2-1/2 in. (64 mm) wide and spaced max 24 in. (610 mm) OC.
B. Gypsum Board* — Nom 5/8 in. (16 mm) thick gypsum board, with square or tapered edges. The gypsum board type, thickness, number of layers, fastener type and sheet orientation shall be as specified in the individual Wall and Partition Design in the UL Fire Resistance Directory. Max diam of opening is 5-1/2 in. (138 mm) when sleeve (Item 2) is employed. Max diam of opening is 4 in. (102 mm) when sleeve (Item 2) is not employed.
The F, FH Ratings of the firestop system are equal to the fire rating of the wall assembly.

2. Metallic Sleeve — (Optional) - Nom 4 in. (102 mm) diam (or smaller) steel electrical metallic tubing (EMT) or Schedule 5 (or heavier) steel pipe or min 0.016 in. thick (0.41 mm, No. 28 ga) galv steel sleeve installed flush with wall surfaces. The annular space between steel sleeve and periphery of opening shall be min 0 in. (0 mm, point contact) to max 1 in. (25mm). When Schedule 5 steel pipe or EMT is used, sleeve may extend up to 18 in. (457 mm) beyond the wall surfaces. As an option when Schedule 5 steel pipe or EMT is used, sleeve may extend continuously beyond one wall surface. When cable bundle penetrates wall assembly at an angle of 45 degrees, no metallic sleeve is used.

3. Cables — Aggregate cross-sectional area of cable in opening to be max 45 percent of the cross-sectional area of the opening. The annular space between the cable bundle and the periphery of the opening to be min 0 in. (point contact) to max 1 in. (25 mm). When sleeve is continuous on one side of wall (see Item 2), the cable fill may be 0 to 45% and the max annular space is not limited. Cables to be rigidly supported on both sides of the wall assembly. Cable bundle, using cables described below, may penetrate the wall at an angle not greater than 45 degrees. Any combination of the following types and sizes of copper conductor cables may be used:

A. Max 7/C No. 12 AWG with polyvinyl chloride (PVC) insulation and jacket.
B. Max 25 pair No. 24 AWG telephone cable with PVC insulation and jacket.
B1. Max 4 pr No. 22 AWG Cat 5 or Cat 6 computer cables.
C. Type RG/U coaxial cable with polyethylene (PE) insulation and PVC jacket having a max outside diameter of ½ in. (13 mm).
C1. Max RG 6/U coaxial cable with fluorinated ethylene insulation and jacketing.
D. Multiple fiber optical communication cable jacketed with PVC and having a max OD of 5/8 in. (16 mm).
E. Through Penetrating Products*— Max three copper conductor No. 8 AWG .Metal-Clad Cable+.
AFC CABLE SYSTEMS INC
F. Max 3/C (with ground)(or smaller) No. 8 AWG copper conductor cable with PVC insulation and jacketing.
G. Max 3/4 in. (19 mm) diam copper ground cable with or without a PVC jacket.
H. Fire Resistive Cables* - Max 1-1/4 in. (32 mm) diam single conductor or multi conductor Type MI cable. A min 1/8 in. (3 mm) separation shall be maintained between MI cables and any other types of cable.
I. Max 4/C with ground 300 kcmil (or smaller) aluminum SER cable with PVC insulation and jacket.
J. Through Penetrating Product* - Any cables, Metal-Clad Cable+ or Armored Cable+ currently Classified under the Through Penetrating Products category.
K. Maximum 3/C No. 8 AWG metal-clad cable.
L. Maximum 5/8 diam fiber-optic cable with PVC jacket.
For cable bundle penetrating the wall assembly at an angle of 45 degrees, the T, FT, FTH Ratings are 0 hr and 3/4 hr for 1 and 2 hr wall assemblies, respectively.
See Through Penetrating Product (XHLY) category in the Fire Resistance Directory for names of manufacturers.

4. Fill, Void or Cavity Material*— Sealant or Putty — Fill material applied within the annulus, flush with each end of the steel sleeve or wall surface. Fill material installed symmetrically on both sides of the wall. A min 5/8 in. (16 mm) thickness of sealant is required for the 1 or 2 hr F Rating . An additional 1/2 in. (13 mm) diam bead of fill material shall be applied at the interface of sleeve with gypsum board.
HILTI CONSTRUCTION CHEMICALS, DIV OF HILTI INC — CP601S, CP606, FS-One Sealants or FS-ONE MAX Intumescent Sealantor or CP618 Putty

5. Packing Material — (Optional, Not Shown) — Mineral wool forming material may be used as a backer for the fill material (Item 4). When used, it shall be firmly packed into annular space within the sleeve as a permanent form and recessed from end of sleeve to accommodate the required thickness of fill material.

*** Indicates such products shall bear the UL or cUL Certification Mark for jurisdictions employing the UL or cUL Certification (such as Canada), respectively.**

+Bearing the UL Listing Mark

Last Updated on 2015-01-23

H5 — UL W-L-3065 — NTS

Design No. W-L-3068

August 24, 2011

F Rating — 2 Hr

T Rating — 0 Hr

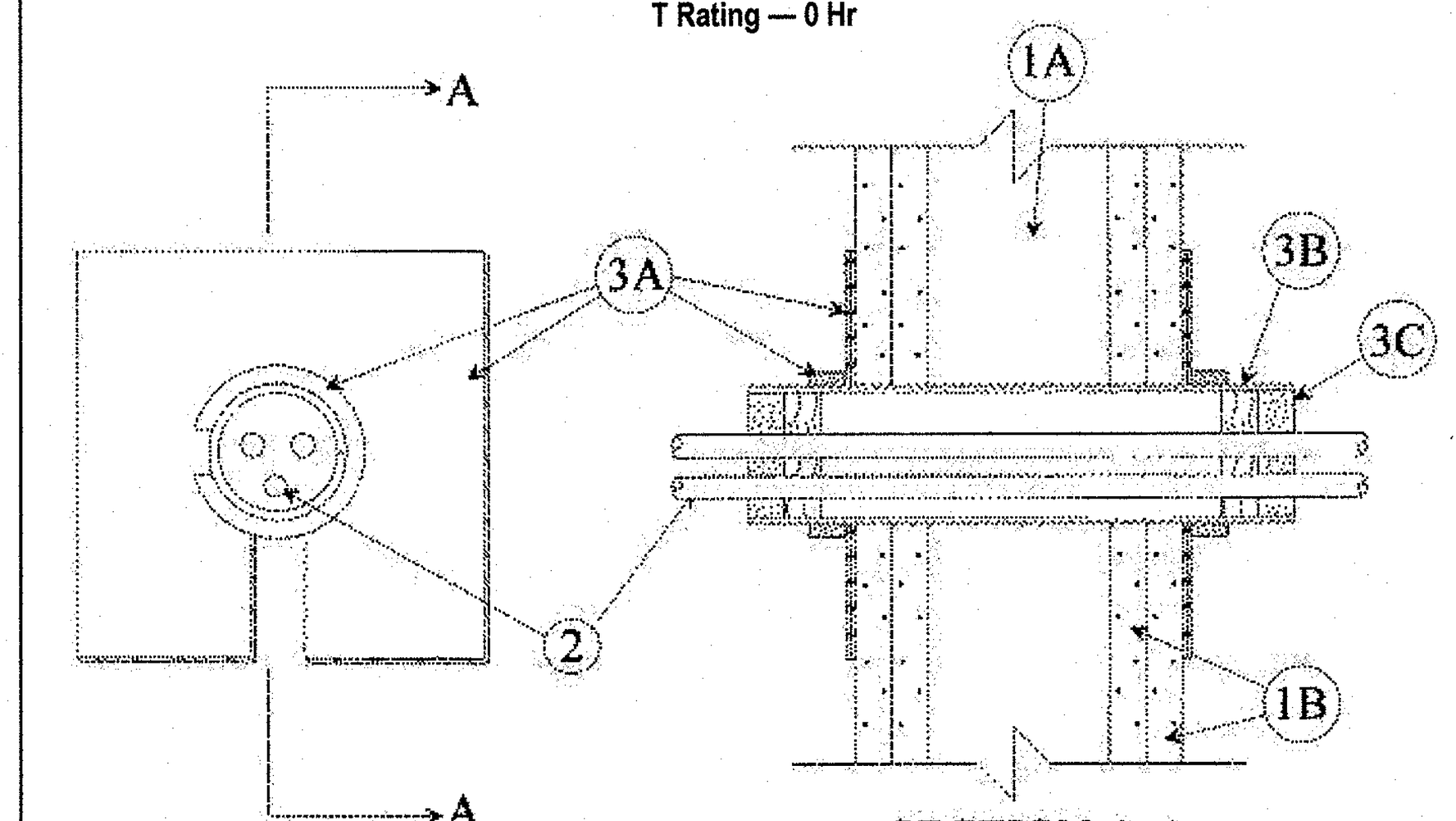

SECTION A-A

1. **Wall Assembly** — The fire-rated gypsum wallboard/stud wall assembly shall be constructed of the materials and in the manner specified in the individual U300 or U400 Series Wall and Partition Designs in the UL Fire Resistance Directory and shall include the following construction features:
A. **Studs** — Wall framing may consist of either wood studs or steel channel studs. Wood studs to consist of nom 2 by 4 in. lumber spaced 16 in. OC. Steel studs to be min 3-5/8 in. wide and spaced max 24 in. OC.
B. **Gypsum Board*** — Two layers of nom 5/8 in. thick gypsum wallboard, as specified in the individual Wall and Partition Design.
2. **Cables** — Aggregate cross-sectional area of cables in Split Sleeve to be min 8 percent to max 36 percent of the aggregate cross-sectional area of the Split Sleeve. Cables to be rigidly supported on both sides of wall assembly. Any combination of the following types and sizes of copper conductor cable may be used:
A. Max 350 kcmil single conductor Type XHHW power cables; cross-linked polyethylene (XLPE) insulation.
B. Max 150 pair No. 24 AWG conductor telecommunication cables; polyvinyl chloride (PVC) insulation and jacket materials.
C. Max No. 12 AWG multiconductor Type TC power and control cables; Type XHHW conductors XLPE insulation with XLPE or PVC jacket.
3. **Firestop System** — The firestop system shall consist of the following:
A. **Firestop Device*** — Threaded steel sleeve halves incorporating split nuts and split washers sized to fit the specific diam of the opening. Device shall be installed around cables in accordance with the accompanying installation instructions. Device provided in nom 1, 2 and 4 in. sizes. Max diam of opening in wall for 1, 2 and 4 in. size devices are 1-1/4, 2-7/16 and 4-1/2 in., respectively.
UNIQUE FIRE STOP PRODUCTS INC — Split Sleeve
B. **Packing Material** — Min 1 in. thickness of min 4.0 pcf mineral wool batt insulation firmly packed into Split Sleeve as a permanent form. Packing material to be recessed from each end of Split Sleeve as required to accommodate the required thickness of fill material.
C. **Fill, Void or Cavity Material*** — **Caulk, Sealant or Putty** — Min 1 in. thickness of fill material applied within the Split Sleeve, flush with both ends.
3M COMPANY — CP 25WB+ Caulk, MPS-2+ Putty or FB-3000 WT Sealant

*** Indicates such products shall bear the UL or cUL Certification Mark for jurisdictions employing the UL or cUL Certification (such as Canada), respectively.**

Last Updated on 2011-08-24

D7 — UL W-L-3068 — NTS

Design No. W-L-3071

ANSI/UL1479 (ASTM E814)	CAN/ULC S115
F Rating — 1 and 2 Hr (See Item 1)	F Rating — 1 and 2 Hr (See Item 1)
T Rating — 1/4 and 3/4 Hr (See Item 1)	FT Rating — 1/4 and 3/4 Hr (See Item 1)
L Rating At Ambient — Less Than 1 CFM/sq ft	FH Rating — 1 and 2 Hr (See Item 1)
L Rating At 400 F — 4 CFM/sq ft	FTH Rating — 1/4 and 3/4 Hr (See Item 1)
	L Rating At Ambient — Less Than 1 CFM/sq ft
	L Rating At 400 F — 4 CFM/sq ft

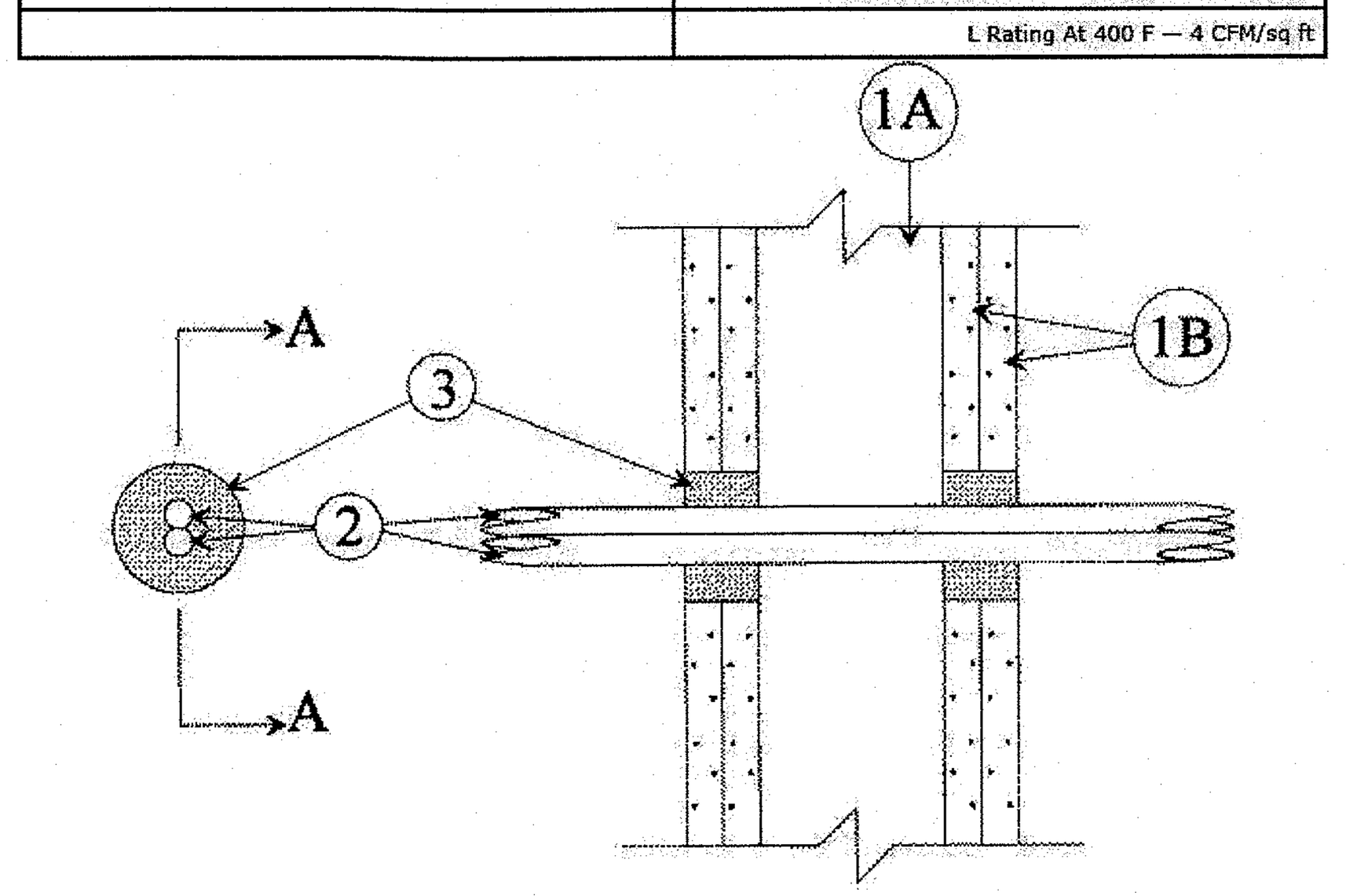

SECTION A-A

1. **Wall Assembly** — The fire-rated gypsum wallboard/stud wall assembly shall be constructed of the materials and in the manner specified in the individual U300, U400, V400 or W400 Series Wall and Partition Designs in the UL Fire Resistance Directory and shall include the following construction features.

A. **Studs** — Wall framing may consist of either wood studs or steel channel studs. Wood studs to consist of nom 2 by 4 in. (51 by 102 mm) lumber spaced 16 in. (405 mm) OC. Steel studs to be min 2-1/2 in. (64 mm) wide and spaced max 24 in. (610 mm) OC.
B. **Gypsum Board*** — 5/8 in. (16 mm) thick, 4 ft (122 cm) wide with square or tappered edges. The gypsum wallboard type, thickness, number of layers, fastener type and sheet orientation shall be as specified in the individual Wall and Partition Design. Max diam of opening is 3 in. (76 mm).
The hourly F, FH Rating of the firestop system is equal to the hourly fire rating of the wall assembly in which it is installed. The hourly T, FT, FTH Rating of the firestop system is 1/4 and 3/4 hr for 1 and 2 hr rated wall assemblies, respectively.

2. **Cables** — Max two 3/C with ground No. 2/0 AWG aluminum or copper Type SER cable with polyvinyl chloride (PVC) insulation. Cable to be rigidly supported on both sides of wall assembly. The annular space between the cables and the periphery of opening shall be min 1/2 in. to max 1-1/2 in. (13 to 38 mm).

3. **Fill, Void or Cavity Material*** — **Sealant** — Installed to completely fill the annular space between the cables and gypsum wallboard on both sides of wall.

HILTI CONSTRUCTION CHEMICALS, DIV OF HILTI INC — FS-One Sealant or FS-MAX Intumescent Sealant

*** Indicates such products shall bear the UL or cUL Certification Mark for jurisdictions employing the UL or cUL Certification (such as Canada), respectively.**

Last Updated on 2015-01-23

H7 — UL W-L-3071 — NTS

Design No. W-L-3117

November 20, 1999

F Ratings — 1 and 2 Hr (See Item 1B)

T Ratings — 1/2, 1 and 2 Hr (See Item 3)

L Rating At Ambient — 8 CFM/sq ft

L Rating At 400 F — Less Than 1 CFM/sq ft

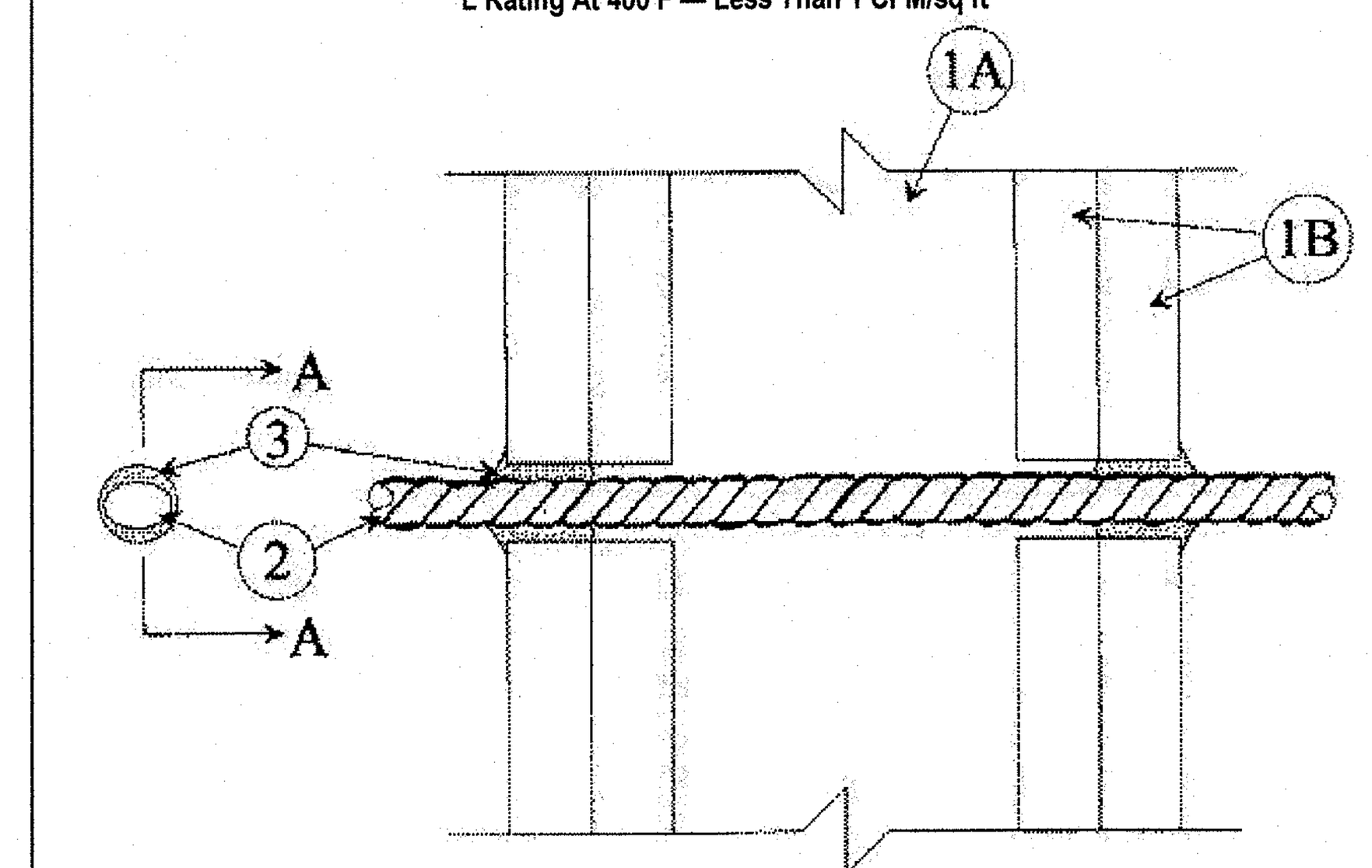

SECTION A-A

1. **Wall Assembly** — The 1 or 2 hr fire rated gypsum wallboard/stud wall assembly shall be constructed of the materials and in the manner specified in the individual U300 or U400 Series Wall and Partition Designs in the UL Fire Resistance Directory and shall include the following construction features:
A. **Studs** — Wall framing may consist of either wood studs or steel channel studs. Wood studs to consist of nom 2 by 4 in. lumber spaced 16 in. OC. Steel studs to be min 2-1/2 in. wide and spaced max 24 in. OC.
B. **Gypsum Board*** — 5/8 in. thick, 4 ft wide with square or tapered edges. The gypsum wallboard type, thickness, number of layers, fastener type and sheet orientation shall be as specified in the individual U300 or U400 Series Design in the UL Fire Resistance Directory. Max diam of opening is 2-1/2 in.
The hourly F Rating of the firestop system is equal to the hourly fire rating of the wall assembly in which it is installed.
2. **Through-Penetrating Product*** — Max four copper conductor No. 2/0 AWG (or smaller) aluminum or steel **Metal-Clad Cable+** or max four copper conductor No. 1 AWG (or smaller) aluminum **Armored Cable#** . Max one cable to be installed either concentrically or eccentricity within the firestop system. The annular space within the firestop system shall be a min 0 in. (point contact) to a max 3/8 in. Through-penetrating product to be rigidly supported on both sides of wall assembly.
SOUTHWIRE CO
2A. **Cables** — As an alternate to Item 2, one cable to be installed either concentrically or eccentricity within the firestop system. The annular space within the firestop system shall be a min 0 in. (point contact) to a max 1/4 in. Cable to be rigidly supported on both sides of wall assembly. The following types and sizes of cables may be used:
A. Max 50 pair No. 24 AWG (or smaller) copper conductor telephone cables with polyvinyl chloride (PVC) insulation and jacket materials.
B. Max 3/C (with ground) — No. 10 AWG (or smaller) PVC insulated and jacketed nonmetallic sheathed (Romex) cable.
C. Max 3/C (with ground) No. 2/0 AWG aluminum conductor service entrance cable with PVC insulation and jacket materials.
3. **Fill, Void or Cavity Material*** — **Sealant or Putty** — Fill material applied within the annulus, flush with both surfaces of wall. Additional fill material to be installed such that a crown is formed around the penetrating item. The T Rating of the firestop system is dependent upon the hourly rating of the wall, type of through penetrant and type and thickness of fill material as tabulated below:

Rating of Wall Hr	Type of Through Penetrant	Type of Fill Mtl	Thkns of Fill Mtl In.	Thkns of Fill Mtl Crown In.	T Rating Hr
1	Telephone Cable	Sealant	5/8	1/4	1
2	Telephone Cable	Sealant	5/8	1/4	2
1	Telephone Cable	Putty	5/8	3/8	1
2	Telephone Cable	Putty	3/4	1/4	2
1	Romex Cable	Sealant	5/8	3/8	1
2	Romex Cable	Sealant	3/4	1/4	2
1	Romex Cable	Putty	5/8	3/8	1
2	Romex Cable	Putty	3/4	1/4	2
2	Service Cable	Sealant	5/8	1/4	1/2
1	Service Cable	Sealant	5/8	1/4	1/2
2	Metal Clad or Armored Cable	Sealant	5/8	1/4	1/2
1	Metal Clad or Armored Cable	Sealant	5/8	1/4	1/2

SPECIFIED TECHNOLOGIES INC — SpecSeal 100, 101, 102 or 105 Sealant or SpecSeal Putty

*Bearing the UL Classification Marking

+Bearing the UL Listing Mark

Last Updated on 1999-11-20

LAKE COUNTY BUILDING SERVICES
Any errors or omissions in these plans shall be made to conform with the applicable code requirements per Florida Building Code, in accordance with Section 107. Plans were reviewed for code compliance and shall be kept on job site.

RECEIVED FEB 1 4 2019

H9 — UL W-L-3117 — NTS

PERMIT REVIEW STAMP

ISSUE HISTORY

No.	Date	Description
1	02/08/2019	ISSUE FOR PERMIT

REVISION HISTORY

No.	Date	Description

FUGLEBERG KOCH

2555 Temple Trail, Winter Park, FL 32789 (407) 629-0595
www. fuglebergkoch.com AA26002103

CONSULTANT

MICHAEL E. GOVE
FLORIDA LICENSE # AR94111
02/08/2019
STATE OF FLORIDA — MICHAEL E. GOVE — AR94111 — REGISTERED ARCHITECT

SUMMER BAY APTS. II
LAKE COUNTY, FL

Drawn:	Author
Checked:	Checker
Approval:	Approver
Date:	Issue Date
Project #:	5389

UL REFERENCE DIRECTORY - WALL PENETRATIONS

A0.37

PLOTTED: 2/11/2019 2:29:07 PM

© 2017 These documents and their contents are the property of FUGLEBERG KOCH - AA26002103, and are issued only for the specific project noted on these drawings. Any reproductions, revisions, or modifications of these documents without the expressed written consent of Fugleberg Koch, is prohibited by law.

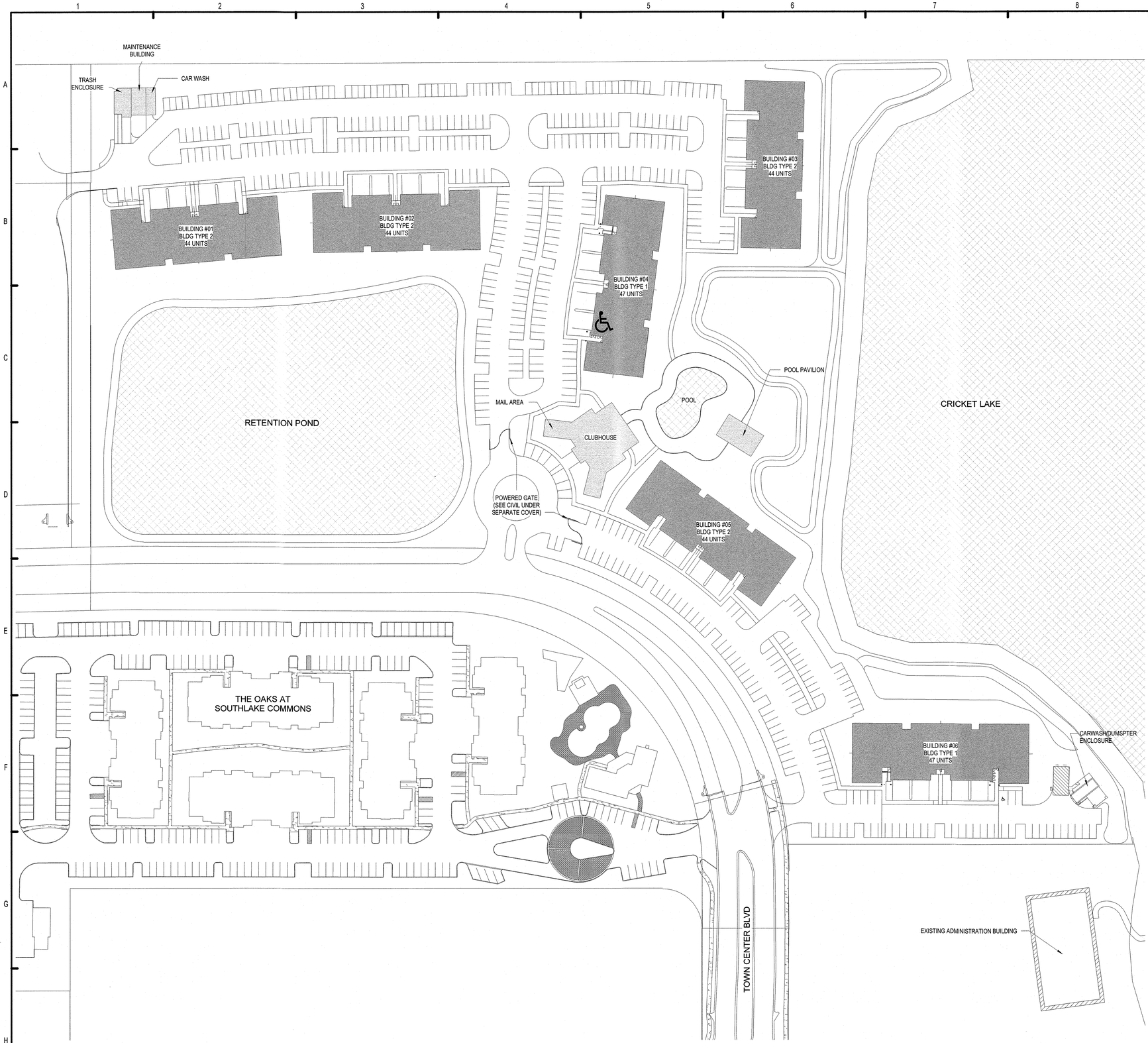

H1 ARCHITECTURAL SITE PLAN - 1-60

1" = 60'-0"

GENERAL NOTES:

1. SEE CIVIL PLAN FOR PARKING SUMMARY.
2. THIS SITE PLAN IS FOR ARCHITECTURAL INFORMATION ONLY. SEE CIVIL & LANDSCAPE DOCUMENTS FOR SPECIFIC BUILDING LOCATION & OTHER SITE REQUIREMENTS. SEE LANDSCAPE DRAWINGS UNDER SEPARATE COVER FOR SITE CONFIGURATION, LAYOUT, GRADING AND RELATED INFORMATION
3. THE SWIMMING POOL(S) SHOWN ON THE DRAWINGS ARE PROVIDED FOR GENERAL LOCATION AND SHAPE SUGGESTION PURPOSES ONLY. FUGLEBERG KOCH LLC IS NOT QUALIFIED TO PROVIDE SERVICES FOR POOLS AND MAKES NO ATTEMPT TO DO SO. POOL DESIGN DOCUMENTS FOR CONSTRUCTION, CODE COMPLIANCE, AGENCY APPROVALS, CONSTRUCTION CERTIFICATION AND OTHER SERVICES REQUIRED FOR THE POOL(S) SHALL BE PERFORMED BY OTHERS UNDER THE SEPARATE CONTRACT WITH THE OWNER

LEGEND:

M.C METER CENTER. APROX 2000 AMP LOAD PER NEC

DESIGNATED ACCESIBLE GARAGE

Area Schedule (Building Area)

Name	Building Type	Area
Not Placed		
Area		Not Placed
Area		Not Placed
Area		Not Placed
		0 SF
		0 SF
GRND. LEVEL		
CIRCULATION / UTILITY GROUND LEVEL	BUILDING TYPE 1	3,034 SF
GARAGE	BUILDING TYPE 1	1,321 SF
GARAGE	BUILDING TYPE 1	1,322 SF
RESIDENTIAL	BUILDING TYPE 1	9,880 SF
		15,557 SF
LEVEL 2		
CIRCIRCULATION & UTILITY	BUILDING TYPE 1	1,768 SF
RESIDENTIAL LEVELS 2-4	BUILDING TYPE 1	9,884 SF
RESIDENTIAL LEVELS 2-4	BUILDING TYPE 1	3,857 SF
		15,509 SF
LEVEL 3		
RESIDENTIAL LEVELS 2-4	BUILDING TYPE 1	3,860 SF
RESIDENTIAL LEVELS 2-4	BUILDING TYPE 1	9,886 SF
CIRCIRCULATION & UTILITY	BUILDING TYPE 1	1,764 SF
		15,510 SF
LEVEL 4		
RESIDENTIAL LEVELS 2-4	BUILDING TYPE 1	9,885 SF
CIRCIRCULATION & UTILITY	BUILDING TYPE 1	1,763 SF
RESIDENTIAL LEVELS 2-4	BUILDING TYPE 1	3,862 SF
		15,510 SF
		62,085 SF
GRND. LEVEL		
CIRCULATION / UTILITY GROUND LEVEL	BUILDING TYPE 2	2,785 SF
GARAGE	BUILDING TYPE 2	1,198 SF
GARAGE	BUILDING TYPE 2	1,198 SF
RESIDENTIAL	BUILDING TYPE 2	9,582 SF
		14,762 SF
LEVEL 2		
RESIDENTIAL LEVELS 2-4	BUILDING TYPE 2	3,521 SF
CIRCIRCULATION & UTILITY	BUILDING TYPE 2	1,618 SF
RESIDENTIAL LEVELS 2-4	BUILDING TYPE 2	9,581 SF
		14,720 SF
LEVEL 3		
RESIDENTIAL LEVELS 2-4	BUILDING TYPE 2	9,583 SF
RESIDENTIAL LEVELS 2-4	BUILDING TYPE 2	3,521 SF
CIRCIRCULATION & UTILITY	BUILDING TYPE 2	1,615 SF
		14,719 SF
LEVEL 4		
RESIDENTIAL LEVELS 2-4	BUILDING TYPE 2	9,583 SF
CIRCIRCULATION & UTILITY	BUILDING TYPE 2	1,615 SF
RESIDENTIAL LEVELS 2-4	BUILDING TYPE 2	3,521 SF
		14,719 SF
		58,921 SF
GRND. LEVEL		
CLUBHOUSE	CLUBHOUSE	4,293 SF
		4,293 SF
		4,293 SF
GRND. LEVEL		
MAINTENANCE	MAINTENANCE	1,300 SF
		1,300 SF
		1,300 SF
GRND. LEVEL		
POOL PAVILION	POOL PAVILION	1,359 SF
		1,359 SF
		1,359 SF
GRND. LEVEL		
TRASH ENCLOSURE	TRASH ENCLOSURE	462 SF
		462 SF
		462 SF

LAKE COUNTY BUILDING SERVICES

Any errors or omissions in these plans shall be made to conform with the applicable code requirements per Florida Building Code, in accordance with Section 107. Plans were reviewed for code compliance and shall be kept on job site.

RECEIVED FEB 14 2019

PERMIT REVIEW STAMP

ISSUE HISTORY

No.	Date	Description
1	02/08/2019	ISSUE FOR PERMIT

REVISION HISTORY

No.	Date	Description

FUGLEBERG KOCH

2555 Temple Trail, Winter Park, FL 32789 (407) 629-0595
www.fuglebergkoch.com AA26002103

CONSULTANT

MICHAEL E. GOVE
FLORIDA LICENSE AR94111
2/08/2019
STATE OF FLORIDA
MICHAEL E. GOVE
AR94111
REGISTERED ARCHITECT

SUMMER BAY APTS. II

LAKE COUNTY, FL

Drawn:	Author
Checked:	Checker
Approval:	Approver
Date:	Issue Date
Project #:	5389

ARCHITECTURAL SITE PLAN

A1.01

PLOTTED: 2/11/2019 2:29:13 PM

© 2017 These documents and their contents are the property of FUGLEBERG KOCH, LLC#26002103, and are issued only for the specific project noted on these drawings. Any reproductions, revisions, or modifications of these documents without the expressed written consent of Fuglebergkoch is prohibited by law.

GENERAL NOTES:

1. OVERALL PLAN DIMENSIONS ARE FROM OUTSIDE FACE OF STUD OR FACE OF MASONRY. ALL WINDOW AND DOOR DIMENSIONS ARE TO CENTERLINE OF OPENING . UNLESS NOTED OTHERWISE.
2. CONTRACTOR TO FIELD VERIFY ALL DIMENSIONS. NOTIFY ARCHITECT OF ANY DISCREPANCIES.
3. REFER TO A0.10 LIFE SAFETY SHEETS FOR RATED WALL LOCATION & INFORMATION.
4. SEE A3.00 SERIES SHEETS FOR UNIT PLAN INFORMATION, INCLUDING DIMENSIONS & DOOR TYPES. UNIT PLANS SHOWN ARE TYPICAL - SEE BUILDING PLANS FOR UNIT ORIENTATION - PLANS MAY NEED TO BE REVERSED - ADJUST DIMENSION LAYOUTS ACCORDINGLY.
5. REFER TO REFLECTED CEILING PLANS FOR R.C.P. INFORMATION.
6. ALL UNITS ARE TO BE COMPLIANT PER THE FAIR HOUSING ACT (FHA).
7. SEE CIVIL PLANS FOR ACTUAL FINISH FLOOR ELEVATIONS.
8. VERIFY EXACT LOCATION AND FIRE EXTIGUISHERS TYPE WITH FIRE OFFICIALS. PROVIDE ONE FIRE EXTINGUISHER PER UNIT.
9. SEE SHEET A3.14 FOR COMMON AREA FINISH SCHEDULE AND UNIT FINISH SCHEDULE.
10. INSULATION - SEE SPECIFICATIONS FOR SCHEDULE OF INSULATION VALUES. ALL EXTERIOR WALLS TO BE 2x6 WITH R-21 BATTS UNLESS NOTED OTHERWISE.
11. ALL VINYL, TILE, AND HARD SURFACE FLOORING AREAS TO HAVE 3/4" GYPSUM FLOOR TOPPING UNDERLAYMENT OVER 6mm SOUND INSULATION. WHERE CARPET AREAS ARE LOCATED, INCREASE GYPSUM FLOOR TOPPING TO 1" IN THICKNESS TO FLUSH OUT AT HARD SURFACE AREAS.
12. REFER TO ENLARGED KITCHEN AND BATH PLANS FOR FHA CLEARANCES AND REQUIREMENTS.
13. PROVIDE FIRE RATED ICE MAKER BOXES, WASHER BOXES, AND DRYER BOXES WHEN LOCATED WITHIN A RATED WALL.
14. SEE UNIT PLANS FOR THE PLAN KEYNOTE LIST.
15. SEE A7.00 SERIES SHEETS FOR DOOR & WINDOW INFORMATION.
16. UNIT NUMBERS ARE INDICATED FOR REFERENCE ONLY. THE OWNER SHALL COORDINATE THE BUILDING AND UNIT NUMBERS WITH THE POST OFFICE AND THE LOCAL JURISDICTION.
17. D.S. = 6" METAL DOWN SPOUT (TYP.) UNLESS NOTED OTHERWISE. CONNECT TO STORM WATER SYSTEM, SEE CIVIL.
18. CONTRACTOR TO COORDINATE FLOOR CONTROL JOINTS IN BREEZEWAY TOPPING AT 8'-0" MAX. ON CENTER.
19. PROVIDE 27" HIGH PAINTED METAL GUARDRAIL AT ALL STAIR LOCATIONS WHERE CLEARANCE UNDER STAIR IS AT OR LESS THAN 6'-8".
20. BALCONY GUARDRAILS TO BE 36" HIGH AT 1ST FLOOR BALCONIES & 42" HIGH AT ALL OTHER BALCONIES ABOVE GROUND LEVEL - RETURN TO AND ATTACH TO WALL AT BOTH ENDS.

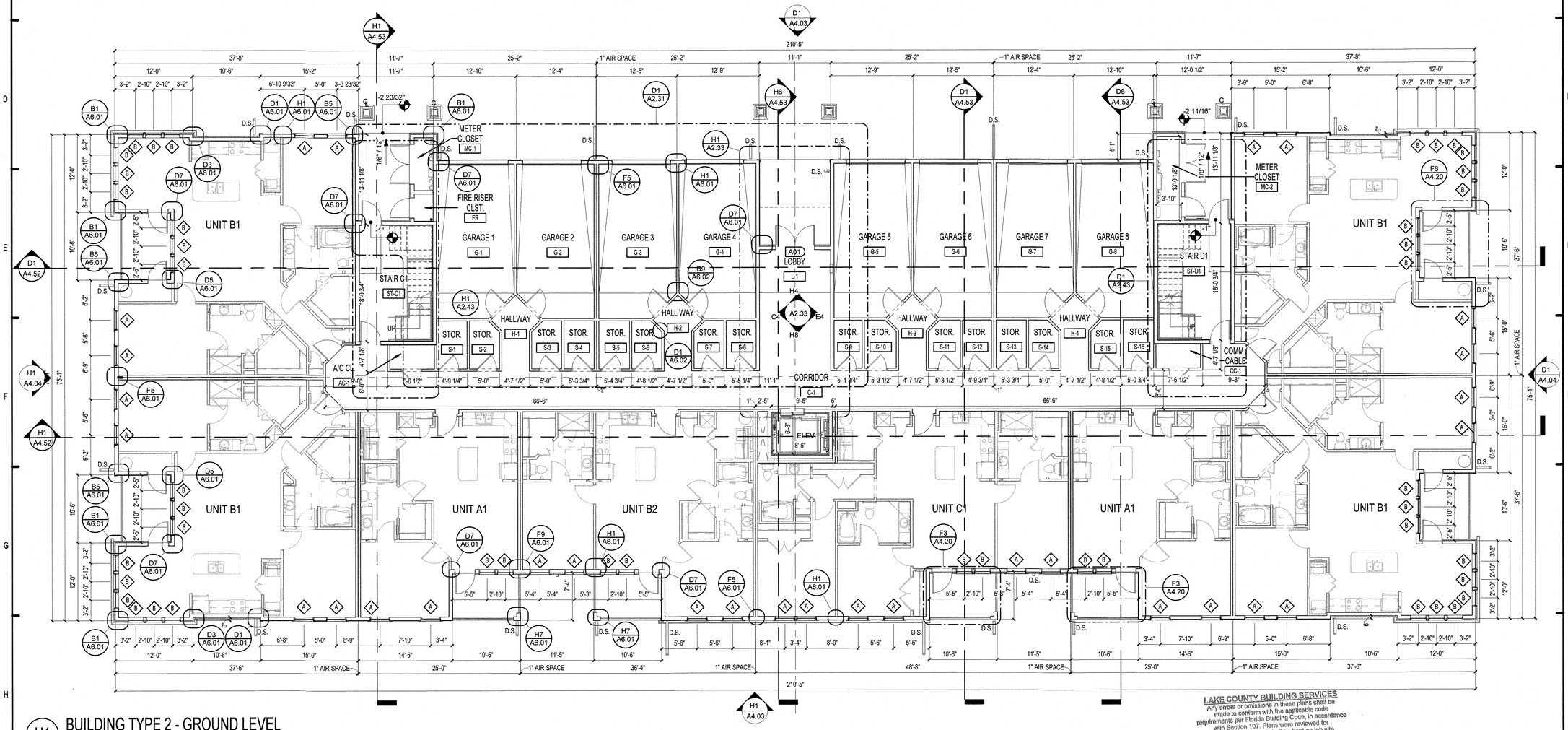

H1 BUILDING TYPE 2 - GROUND LEVEL
1/8" = 1'-0"

LAKE COUNTY BUILDING SERVICES
Any errors or omissions in these plans shall be made to conform with the applicable code requirements per Florida Building Code, in accordance with Section 107. Plans were reviewed for code compliance and shall be kept on job site.

RECEIVED FEB 14 2019

PERMIT REVIEW STAMP

ISSUE HISTORY

No.	Date	Description
1	02/08/2019	ISSUE FOR PERMIT

REVISION HISTORY

No.	Date	Description

© 2017 These documents are the property of FUGLEBERG KOCH, P.A. (FKA) and are not to be used on any other project without the express written consent of Fugleberg Koch, is prohibited by law.

FUGLEBERG KOCH
2555 Temple Trail, Winter Park, FL 32789 (407) 629-0595
www.fuglebergkoch.com AA26002103
CONSULTANT

MICHAEL E. GOVE
Florida License No. AR94111
STATE OF FLORIDA
MICHAEL E. GOVE
AR94111
REGISTERED ARCHITECT
2/8/2019

SUMMER BAY APTS. II
LAKE COUNTY, FL

Drawn:	Author
Checked:	Checker
Approved:	Approver
Date:	Issue Date
Project #:	5389

BUILDING TYPE 2 - GROUND FLOOR PLAN

A2.08

PLOTTED: 2/11/2019 2:29:24 PM

GENERAL NOTES:

1. OVERALL PLAN DIMENSIONS ARE FROM OUTSIDE FACE OF STUD OR FACE OF MASONRY. ALL WINDOW AND DOOR DIMENSIONS ARE TO CENTERLINE OF OPENING . UNLESS NOTED OTHERWISE.
2. CONTRACTOR TO FIELD VERIFY ALL DIMENSIONS. NOTIFY ARCHITECT OF ANY DISCREPANCIES.
3. REFER TO A0.10 LIFE SAFETY SHEETS FOR RATED WALL LOCATION & INFORMATION.
4. SEE A3.00 SERIES SHEETS FOR UNIT PLAN INFORMATION, INCLUDING DIMENSIONS & DOOR TYPES. UNIT PLANS SHOWN ARE TYPICAL - SEE BUILDING PLANS FOR UNIT ORIENTATION - PLANS MAY NEED TO BE REVERSED - ADJUST DIMENSION LAYOUTS ACCORDINGLY.
5. REFER TO REFLECTED CEILING PLANS FOR R.C.P. INFORMATION.
6. ALL UNITS ARE TO BE COMPLIANT PER THE FAIR HOUSING ACT (FHA).
7. SEE CIVIL PLANS FOR ACTUAL FINISH FLOOR ELEVATIONS.
8. VERIFY EXACT LOCATION AND FIRE EXTIGUISHERS TYPE WITH FIRE OFFICIALS. PROVIDE ONE FIRE EXTINGUISHER PER UNIT.
9. SEE SHEET A3.14 FOR COMMON AREA FINISH SCHEDULE AND UNIT FINISH SCHEDULE.
10. INSULATION - SEE SPECIFICATIONS FOR SCHEDULE OF INSULATION VALUES. ALL EXTERIOR WALLS TO BE 2x6 WITH R-21 BATTS UNLESS NOTED OTHERWISE.
11. ALL VINYL, TILE, AND HARD SURFACE FLOORING AREAS TO HAVE 3/4" GYPSUM FLOOR TOPPING UNDERLAYMENT OVER 6mm SOUND INSULATION. WHERE CARPET AREAS ARE LOCATED, INCREASE GYPSUM FLOOR TOPPING TO 1" IN THICKNESS TO FLUSH OUT AT HARD SURFACE AREAS.
12. REFER TO ENLARGED KITCHEN AND BATH PLANS FOR FHA CLEARANCES AND REQUIREMENTS.
13. PROVIDE FIRE RATED ICE MAKER BOXES, WASHER BOXES, AND DRYER BOXES WHEN LOCATED WITHIN A RATED WALL.
14. SEE UNIT PLANS FOR THE PLAN KEYNOTE LIST.
15. SEE A7.00 SERIES SHEETS FOR DOOR & WINDOW INFORMATION.
16. UNIT NUMBERS ARE INDICATED FOR REFERENCE ONLY. THE OWNER SHALL COORDINATE THE BUILDING AND UNIT NUMBERS WITH THE POST OFFICE AND THE LOCAL JURISDICTION.
17. D.S. = 6" METAL DOWN SPOUT (TYP.) UNLESS NOTED OTHERWISE. CONNECT TO STORM WATER SYSTEM, SEE CIVIL.
18. CONTRACTOR TO COORDINATE FLOOR CONTROL JOINTS IN BREEZEWAY TOPPING AT 8'-0" MAX. ON CENTER.
19. PROVIDE 27" HIGH PAINTED METAL GUARDRAIL AT ALL STAIR LOCATIONS WHERE CLEARANCE UNDER STAIR IS AT OR LESS THAN 6'-8".
20. BALCONY GUARDRAILS TO BE 36" HIGH AT 1ST FLOOR BALCONIES & 42" HIGH AT ALL OTHER BALCONIES ABOVE GROUND LEVEL - RETURN TO AND ATTACH TO WALL AT BOTH ENDS.

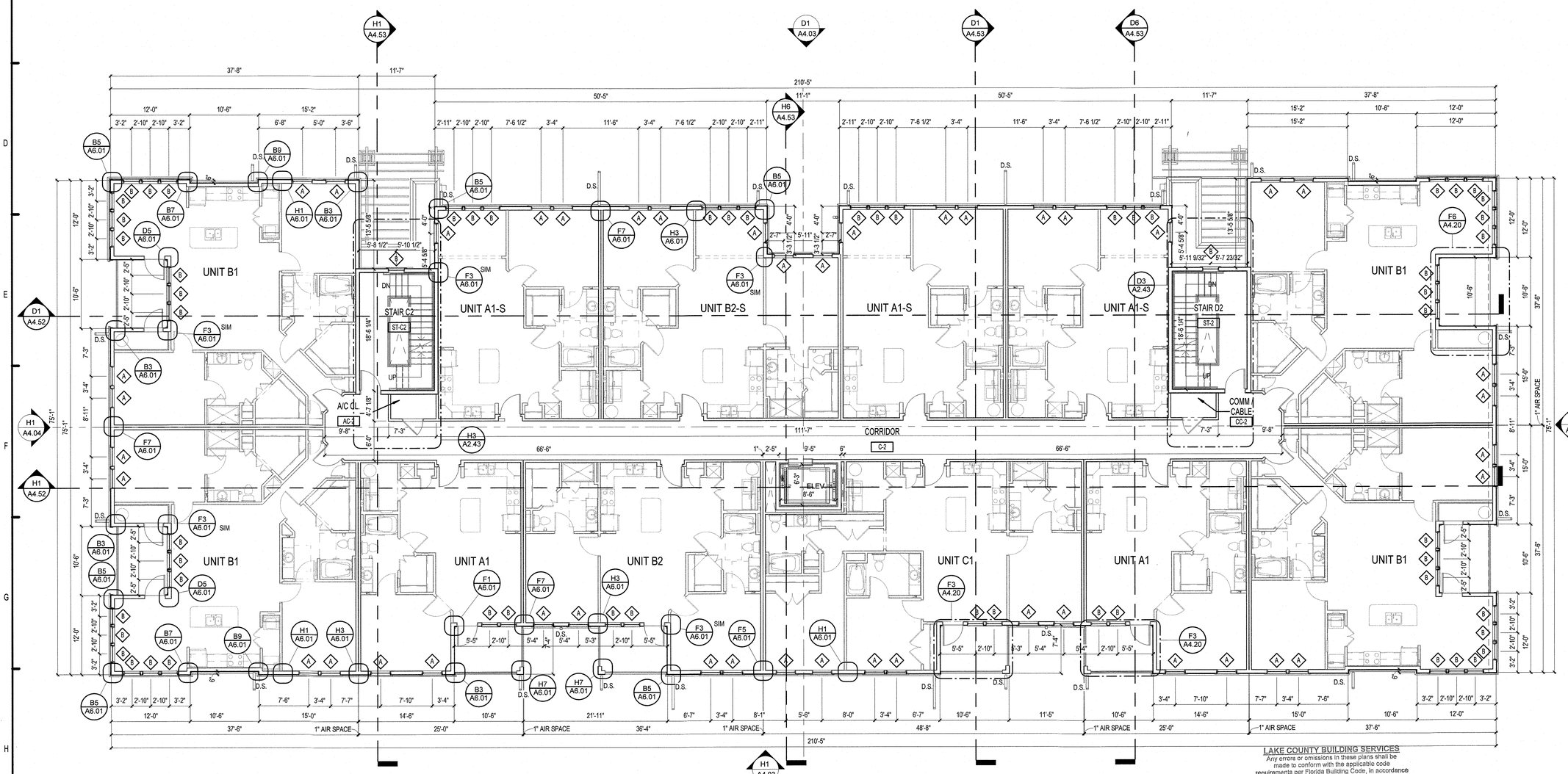

H1 BUILDING TYPE 2 - LEVEL 2
1/8" = 1'-0"

RECEIVED FEB 14 2019

PERMIT REVIEW STAMP

ISSUE HISTORY

No.	Date	Description
1	02/08/2019	ISSUE FOR PERMIT

REVISION HISTORY

No.	Date	Description

FUGLEBERG KOCH
2555 Temple Trail, Winter Park, FL 32789 (407) 629-0595
www.fuglebergkoch.com AA26002103
CONSULTANT

MICHAEL E. GOVE LICENSE # AR94111 STATE OF FLORIDA MICHAEL E. GOVE REGISTERED ARCHITECT AR94111 2/12/2019

SUMMER BAY APTS. II
LAKE COUNTY, FL

Drawn:	Author
Checked:	Checker
Approval:	Approver
Date:	Issue Date
Project #:	5389

BUILDING TYPE 2 - LEVEL 2 PLAN

A2.09

PLOTTED: 2/11/2019 2:29:36 PM

© 2017 These documents and the ideas incorporated into them are the property of FUGLEBERG KOCH, and no part may be used for any purpose without the express written consent of Fuglerberg Koch, is prohibited by law.
Any reproductions, revisions, or modifications of these documents without the expressed written consent of Fuglerberg Koch, is prohibited by law.

GENERAL NOTES:

1. OVERALL PLAN DIMENSIONS ARE FROM OUTSIDE FACE OF STUD OR FACE OF MASONRY. ALL WINDOW AND DOOR DIMENSIONS ARE TO CENTERLINE OF OPENING . UNLESS NOTED OTHERWISE.
2. CONTRACTOR TO FIELD VERIFY ALL DIMENSIONS. NOTIFY ARCHITECT OF ANY DISCREPANCIES.
3. REFER TO A0.10 LIFE SAFETY SHEETS FOR RATED WALL LOCATION & INFORMATION.
4. SEE A3.00 SERIES SHEETS FOR UNIT PLAN INFORMATION, INCLUDING DIMENSIONS & DOOR TYPES. UNIT PLANS SHOWN ARE TYPICAL - SEE BUILDING PLANS FOR UNIT ORIENTATION - PLANS MAY NEED TO BE REVERSED - ADJUST DIMENSION LAYOUTS ACCORDINGLY.
5. REFER TO REFLECTED CEILING PLANS FOR R.C.P. INFORMATION.
6. ALL UNITS ARE TO BE COMPLIANT PER THE FAIR HOUSING ACT (FHA).
7. SEE CIVIL PLANS FOR ACTUAL FINISH FLOOR ELEVATIONS.
8. VERIFY EXACT LOCATION AND FIRE EXTIGUISHERS TYPE WITH FIRE OFFICIALS. PROVIDE ONE FIRE EXTINGUISHER PER UNIT.
9. SEE SHEET A3.14 FOR COMMON AREA FINISH SCHEDULE AND UNIT FINISH SCHEDULE.
10. INSULATION - SEE SPECIFICATIONS FOR SCHEDULE OF INSULATION VALUES. ALL EXTERIOR WALLS TO BE 2x6 WITH R-21 BATTS UNLESS NOTED OTHERWISE.
11. ALL VINYL, TILE, AND HARD SURFACE FLOORING AREAS TO HAVE 3/4" GYPSUM FLOOR TOPPING UNDERLAYMENT OVER 6mm SOUND INSULATION. WHERE CARPET AREAS ARE LOCATED, INCREASE GYPSUM FLOOR TOPPING TO 1" IN THICKNESS TO FLUSH OUT AT HARD SURFACE AREAS.
12. REFER TO ENLARGED KITCHEN AND BATH PLANS FOR FHA CLEARANCES AND REQUIREMENTS.
13. PROVIDE FIRE RATED ICE MAKER BOXES, WASHER BOXES, AND DRYER BOXES WHEN LOCATED WITHIN A RATED WALL.
14. SEE UNIT PLANS FOR THE PLAN KEYNOTE LIST.
15. SEE A7.00 SERIES SHEETS FOR DOOR & WINDOW INFORMATION.
16. UNIT NUMBERS ARE INDICATED FOR REFERENCE ONLY. THE OWNER SHALL COORDINATE THE BUILDING AND UNIT NUMBERS WITH THE POST OFFICE AND THE LOCAL JURISDICTION.
17. D.S. = 6" METAL DOWN SPOUT (TYP.) UNLESS NOTED OTHERWISE. CONNECT TO STORM WATER SYSTEM, SEE CIVIL.
18. CONTRACTOR TO COORDINATE FLOOR CONTROL JOINTS IN BREEZEWAY TOPPING AT 8'-0" MAX. ON CENTER.
19. PROVIDE 27" HIGH PAINTED METAL GUARDRAIL AT ALL STAIR LOCATIONS WHERE CLEARANCE UNDER STAIR IS AT OR LESS THAN 6'-8".
20. BALCONY GUARDRAILS TO BE 36" HIGH AT 1ST FLOOR BALCONIES & 42" HIGH AT ALL OTHER BALCONIES ABOVE GROUND LEVEL - RETURN TO AND ATTACH TO WALL AT BOTH ENDS.

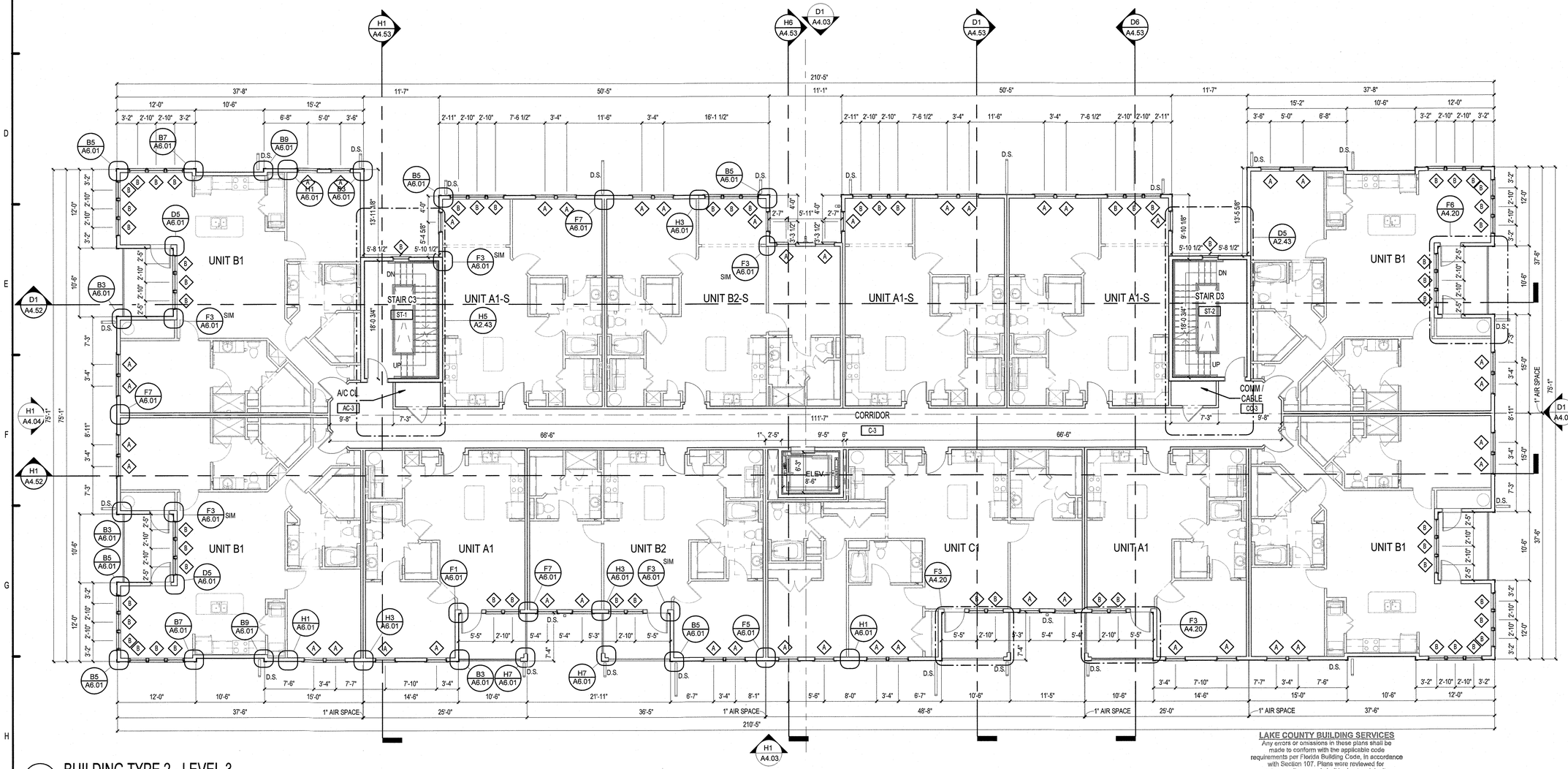

H1 BUILDING TYPE 2 - LEVEL 3
1/8" = 1'-0"

LAKE COUNTY BUILDING SERVICES
Any errors or omissions in these plans shall be made to conform with the applicable code requirements per Florida Building Code, in accordance with Section 107. Plans were reviewed for code compliance and shall be kept on job site.

RECEIVED FEB 14 2019

PERMIT REVIEW STAMP

ISSUE HISTORY

No.	Date	Description
1	02/08/2019	ISSUE FOR PERMIT

REVISION HISTORY

No.	Date	Description

© 2017 This document as the contents as the property of FUGLEBERG KOCH + ASSOCIATES, and is issued only for the specific project listed on these drawings. Any reproductions, revisions, or modifications of these documents without the expressed written consent of Fugleberg Koch, is prohibited by law.

FUGLEBERG KOCH
2555 Temple Trail, Winter Park, FL 32789 (407) 629-0595
www.fuglebergkoch.com AA26002103
CONSULTANT

MICHAEL E. GOVE
LICENSE NUMBER AR94111
STATE OF FLORIDA
MICHAEL E. GOVE
REGISTERED ARCHITECT
02/08/2019
AR94111

SUMMER BAY APTS. II
LAKE COUNTY, FL

Drawn:	Author
Checked:	Checker
Approved:	Approver
Date:	Issue Date
Project #:	5389

BUILDING TYPE 2 - LEVEL 3 PLAN

A2.10

PLOTTED: 2/11/2019 2:29:47 PM.

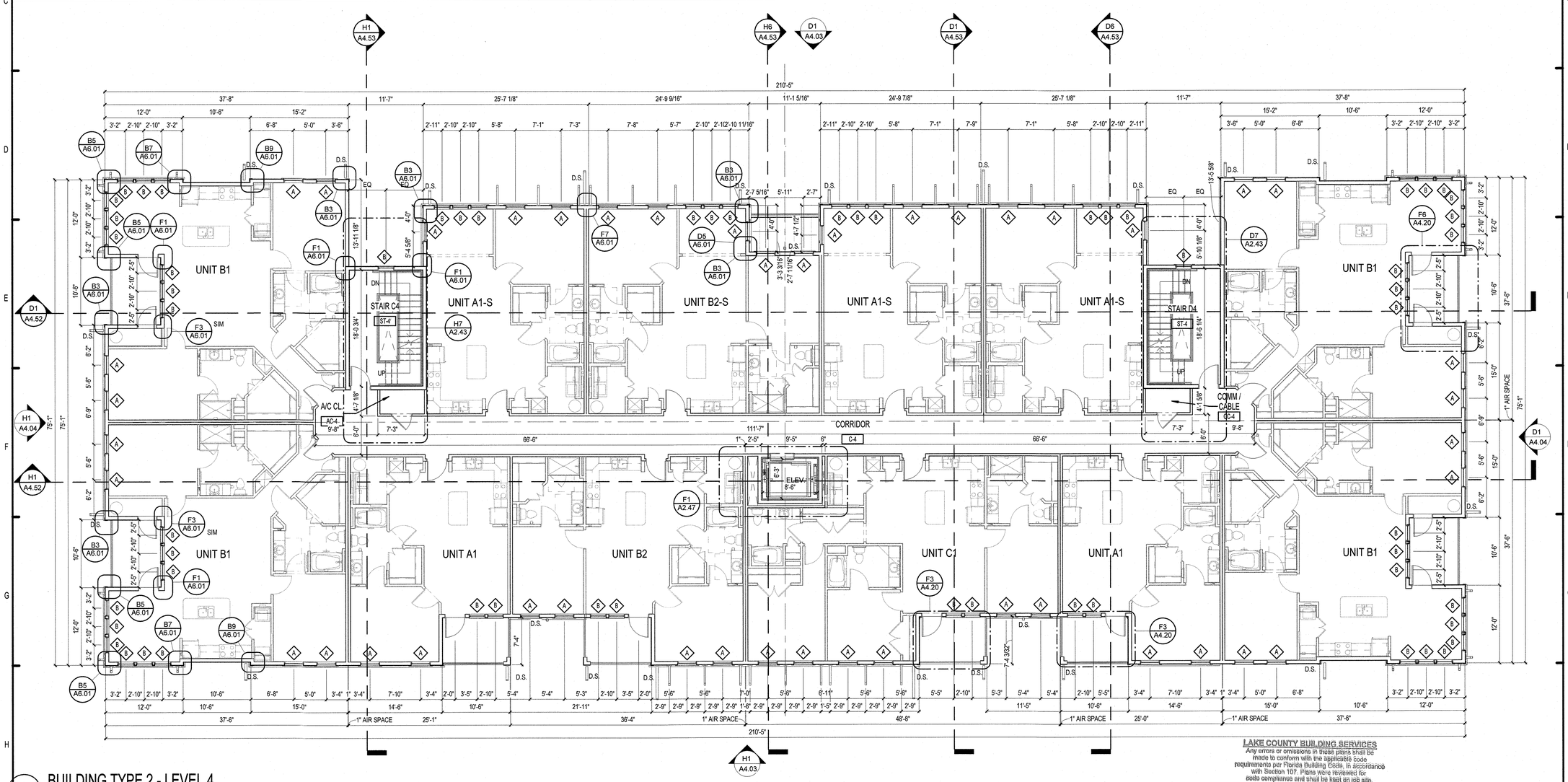

H1 BUILDING TYPE 2 - LEVEL 4
1/8" = 1'-0"

LAKE COUNTY BUILDING SERVICES
Any errors or omissions in these plans shall be made to conform with the applicable code requirements per Florida Building Code, in accordance with Section 107. Plans were reviewed for code compliance and shall be kept on job site.

RECEIVED FEB 14 2019

PERMIT REVIEW STAMP

ISSUE HISTORY

No.	Date	Description
1	02/08/2019	ISSUE FOR PERMIT

REVISION HISTORY

No.	Date	Description

© 2017 These documents and their contents are the property of FUGLEBERG KOCH - AA26002103. Any reproduction, modification or publication of these documents without the express written permission of Fugleberg Koch is strictly prohibited.

FUGLEBERG KOCH
2555 Temple Trail, Winter Park, FL 32789 (407) 629-0595
www.fuglebergkoch.com AA26002103
CONSULTANT

MICHAEL E. GOVE
FLORIDA LICENSE # AR94111
STATE OF FLORIDA
MICHAEL E. GOVE
AR94111
REGISTERED ARCHITECT
02/8/2019

SUMMER BAY APTS. II
LAKE COUNTY, FL

Drawn:	Author
Checked:	Checker
Approval:	Approver
Date:	Issue Date
Project #:	5389

BUILDING TYPE 2 - LEVEL 4 PLAN

A2.11

PLOTTED: 2/11/2019 2:29:59 PM

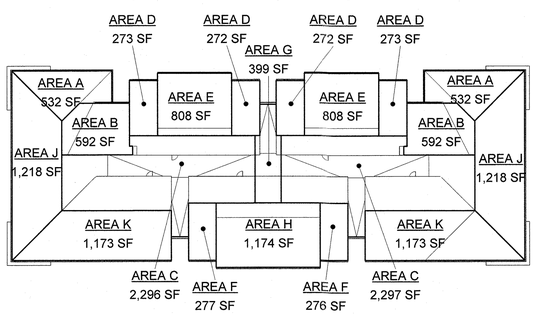

B1 ROOF DRAINAGE PLAN BLDG 2

1" = 30'-0"

PREFERRED GUTTER WIDH = 6"
WORST CASE DEPTH / WIDTH RATIO = 0.70
GUTTER SIZE TO MEET WORSE CASE = 6"w X 4.2"d

AREA "A"	
TOTAL ROOF AREA	532 SQ.FT.
MAX. ROOF PITCH	6 : 12
PITCH DESIGN FACTOR	1.10
EFFECTIVE ROOF AREA	585.20 SQ.FT.
# OF DOWNSPOUTS / AREA	1
AREA OF D.S. REQUIRED	4.18 SQ.IN.
MAX. GUTTER LENGTH	32'
INTENSITY x AREA	4,415.60
PRE. GUTTER WIDTH	6"
MIN. DEPTH / WIDTH RATIO	0.45

MINIMUM DOWNSPOUT SIZES

PLAIN ROUND	3" DIA.
CORRUGATED ROUND	3" DIA.
PLAIN RECTANGULAR	2" x 3"
CORRUGATED RECTANGULAR	2.37" x 3.25"

AREA "B"	
TOTAL ROOF AREA	592 SQ.FT.
MAX. ROOF PITCH	6 : 12
PITCH DESIGN FACTOR	1.10
EFFECTIVE ROOF AREA	651.20 SQ.FT.
# OF DOWNSPOUTS / AREA	1
AREA OF D.S. REQUIRED	4.65 SQ.IN.
MAX. GUTTER LENGTH	13'
INTENSITY x AREA	4,913.60
PRE. GUTTER WIDTH	6"
MIN. DEPTH / WIDTH RATIO	0.40

MINIMUM DOWNSPOUT SIZES

PLAIN ROUND	3" DIA.
CORRUGATED ROUND	3" DIA.
PLAIN RECTANGULAR	2" x 3"
CORRUGATED RECTANGULAR	2.37" x 3.25"

AREA "C"	
TOTAL ROOF AREA	2,296 SQ.FT.
MAX. ROOF PITCH	6 : 12
PITCH DESIGN FACTOR	1.10
EFFECTIVE ROOF AREA	2,525.60 SQ.FT.
# OF DOWNSPOUTS / AREA	1
AREA OF D.S. REQUIRED	18.04 SQ.IN.
MAX. GUTTER LENGTH	-
INTENSITY x AREA	19,056.80
PRE. GUTTER WIDTH	-
MIN. DEPTH / WIDTH RATIO	-

MINIMUM DOWNSPOUT SIZES

PLAIN ROUND	5" DIA.
CORRUGATED ROUND	6" DIA.
PLAIN RECTANGULAR	3.75" x 4.75"
CORRUGATED RECTANGULAR	3.75" x 5.00"

AREA "D"	
TOTAL ROOF AREA	273 SQ.FT.
MAX. ROOF PITCH	6 : 12
PITCH DESIGN FACTOR	1.10
EFFECTIVE ROOF AREA	300.3 SQ.FT.
# OF DOWNSPOUTS / AREA	1
AREA OF D.S. REQUIRED	2.15 SQ.IN.
MAX. GUTTER LENGTH	12'
INTENSITY x AREA	2,265.90
PRE. GUTTER WIDTH	6"
MIN. DEPTH / WIDTH RATIO	0.40

MINIMUM DOWNSPOUT SIZES

PLAIN ROUND	3" DIA.
CORRUGATED ROUND	3" DIA.
PLAIN RECTANGULAR	1.75" x 2.25"
CORRUGATED RECTANGULAR	1.75" x 2.25"

AREA "E"	
TOTAL ROOF AREA	808 SQ.FT.
MAX. ROOF PITCH	6 : 12
PITCH DESIGN FACTOR	1.10
EFFECTIVE ROOF AREA	888.80 SQ.FT.
# OF DOWNSPOUTS / AREA	1
AREA OF D.S. REQUIRED	6.35 SQ.IN.
MAX. GUTTER LENGTH	31'
INTENSITY x AREA	6,706.40
PRE. GUTTER WIDTH	6"
MIN. DEPTH / WIDTH RATIO	0.55

MINIMUM DOWNSPOUT SIZES

PLAIN ROUND	3" DIA.
CORRUGATED ROUND	4" DIA.
PLAIN RECTANGULAR	3" x 4"
CORRUGATED RECTANGULAR	2.37" x 3.25"

AREA "F"	
TOTAL ROOF AREA	277 SQ.FT.
MAX. ROOF PITCH	6 : 12
PITCH DESIGN FACTOR	1.10
EFFECTIVE ROOF AREA	304.70 SQ.FT.
# OF DOWNSPOUTS / AREA	1
AREA OF D.S. REQUIRED	2.18 SQ.IN.
MAX. GUTTER LENGTH	26'
INTENSITY x AREA	2,299.10
PRE. GUTTER WIDTH	6"
MIN. DEPTH / WIDTH RATIO	0.45

MINIMUM DOWNSPOUT SIZES

PLAIN ROUND	3" DIA.
CORRUGATED ROUND	3" DIA.
PLAIN RECTANGULAR	1.75" x 2.25"
CORRUGATED RECTANGULAR	1.75" x 2.25"

AREA "G"	
TOTAL ROOF AREA	399 SQ.FT.
MAX. ROOF PITCH	6 : 12
PITCH DESIGN FACTOR	1.10
EFFECTIVE ROOF AREA	438.90 SQ.FT.
# OF DOWNSPOUTS / AREA	2
AREA OF D.S. REQUIRED	1.57 SQ.IN.
MAX. GUTTER LENGTH	-
INTENSITY x AREA	3,311.70
PRE. GUTTER WIDTH	-
MIN. DEPTH / WIDTH RATIO	-

MINIMUM DOWNSPOUT SIZES

PLAIN ROUND	3" DIA.
CORRUGATED ROUND	3" DIA.
PLAIN RECTANGULAR	1.75" x 2.25"
CORRUGATED RECTANGULAR	1.75" x 2.25"

AREA "H"	
TOTAL ROOF AREA	1,174 SQ.FT.
MAX. ROOF PITCH	6 : 12
PITCH DESIGN FACTOR	1.10
EFFECTIVE ROOF AREA	1,291.40 SQ.FT.
# OF DOWNSPOUTS / AREA	1
AREA OF D.S. REQUIRED	9.22 SQ.IN.
MAX. GUTTER LENGTH	28'
INTENSITY x AREA	9,744.20
PRE. GUTTER WIDTH	6"
MIN. DEPTH / WIDTH RATIO	0.65

MINIMUM DOWNSPOUT SIZES

PLAIN ROUND	4" DIA.
CORRUGATED ROUND	4" DIA.
PLAIN RECTANGULAR	3" x 4"
CORRUGATED RECTANGULAR	2.75" x 4.70"

AREA "J"	
TOTAL ROOF AREA	1,218 SQ.FT.
MAX. ROOF PITCH	6 : 12
PITCH DESIGN FACTOR	1.10
EFFECTIVE ROOF AREA	1,339.80 SQ.FT.
# OF DOWNSPOUTS / AREA	2
AREA OF D.S. REQUIRED	4.79 SQ.IN.
MAX. GUTTER LENGTH	40'
INTENSITY x AREA	10,109.40
PRE. GUTTER WIDTH	6"
MIN. DEPTH / WIDTH RATIO	0.70

MINIMUM DOWNSPOUT SIZES

PLAIN ROUND	3" DIA.
CORRUGATED ROUND	3" DIA.
PLAIN RECTANGULAR	2" x 3"
CORRUGATED RECTANGULAR	2.37" x 3.25"

AREA "K"	
TOTAL ROOF AREA	1,173 SQ.FT.
MAX. ROOF PITCH	6 : 12
PITCH DESIGN FACTOR	1.10
EFFECTIVE ROOF AREA	1,290.30 SQ.FT.
# OF DOWNSPOUTS / AREA	2
AREA OF D.S. REQUIRED	4.61 SQ.IN.
MAX. GUTTER LENGTH	29'
INTENSITY x AREA	9,735.90
PRE. GUTTER WIDTH	6"
MIN. DEPTH / WIDTH RATIO	0.70

MINIMUM DOWNSPOUT SIZES

PLAIN ROUND	3" DIA.
CORRUGATED ROUND	3" DIA.
PLAIN RECTANGULAR	2" x 3"
CORRUGATED RECTANGULAR	2.37" x 3.25"

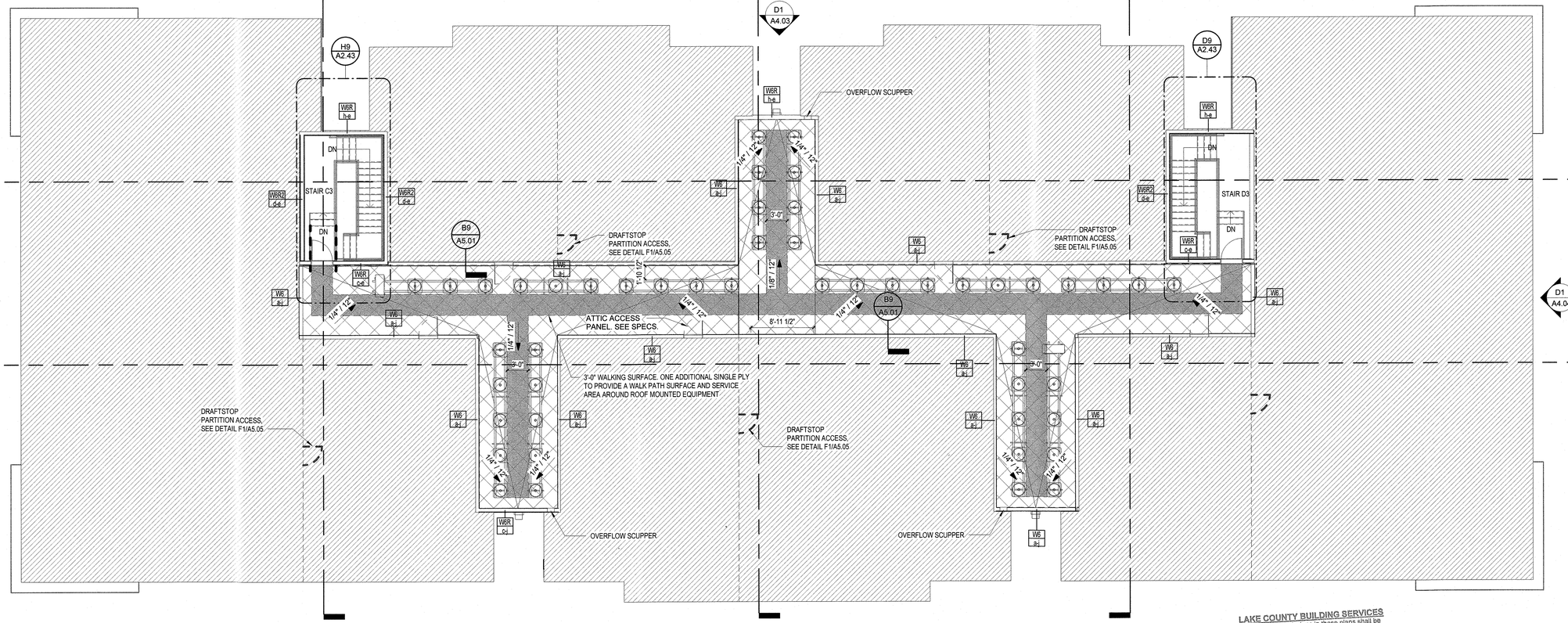

H1 BUILDING TYPE 2 - FLAT ROOF LEVEL

1/8" = 1'-0"

LAKE COUNTY BUILDING SERVICES
Any errors or omissions in these plans shall be made to conform with the applicable code requirements per Florida Building Code, in accordance with Section 107. Plans were reviewed for code compliance and shall be kept on job site.

RECEIVED FEB 14 2019

ROOF NOTES:

1. PAINT ALL ROOF VENTS & PENETRATIONS TO MATCH ROOF COLOR
2. COORDINATE DOWN SPOUT DISCHARGE WITH CIVIL DRAWINGS. WHERE NOT TAKEN TO STORM, PROVIDE SPLASH BLOCK.
3. LEAVE OPENING IN MAIN ROOF SHEATHING FOR VENTILATION UNDERNEATH OVER BUILT AREAS.
4. DOWNSPOUTS AND GUTTERS SHOWN ARE MIN. REQUIREMENTS SUBJECT TO OWNER'S CONSIDERATIONS

LEGEND:

- ATTIC PARTITION. NOTE: DRAFTSTOPPING IS REQUIRED (SEE A0.02 CODE REVIEW). PARTITIONS PROVIDED FOR ACOUSTIC SEPARATION BETWEEN UNITS.
- REMOVABLE ACCESS PANEL. MIN. 36" X 36". SEE DETAIL F1/A5.05
- 3'-0" WIDE ONE ADDITIONAL SINGLE PLY TO PROVIDE A WALK PATH SURFACE AND SERVICE AREA AROUND ROOF MOUNTED EQUIPMENT, TYP.
- AREA OF TAPERED INSULATION
- AREA OF OVERBUILD 45 DEGREE KICKERS AT PARAPET
- RIDGE VENT
- D.S. DOWNSPOUT
- OFF-RIDGE VENT

PERMIT REVIEW STAMP

ISSUE HISTORY

No.	Date	Description
1	02/08/2019	ISSUE FOR PERMIT

REVISION HISTORY

No.	Date	Description

© 2017 These documents and their contents are the property of FUGLEBERG KOCH and may not be used for any purpose without the express written consent of Fugleberg Koch is prohibited by law.

FUGLEBERG KOCH
2555 Temple Trail, Winter Park, FL 32789 (407) 629-0595
www.fuglebergkoch.com AA26002103
CONSULTANT

MICHAEL E. GOVE
LICENSE NUMBER AR94111
STATE OF FLORIDA
MICHAEL E. GOVE
AR94111
REGISTERED ARCHITECT
02/08/2019

SUMMER BAY APTS. II
LAKE COUNTY, FL

Drawn:	Author
Checked:	Checker
Approved:	Approver
Date:	Issue Date
Project #:	5389

BUILDING TYPE 2 - FLAT ROOF PLAN

A2.12

PLOTTED: 2/11/2019 2:30:13 PM

ATTIC VENT CALCULATION	AREA "A1"	
	REQUIRED	PROVIDED
-TOTAL ROOF AREA -PER FBC 2017 (1/300) -VENTILATED AREA	2,816 SF X 0.0033 **9.30 SF**	
-TOTAL SOFFIT LINEAR FOOT -OPENING NET VENTILATION -NET FREE AREA	**4.65 SF** **(50%)**	100 LF X 0.0625 SF **6.25 SF**
-NET RIDGE VENT AREA -LINEAR FEET OF VENT -NET FREE AREA	**4.65 SF** **(50%)**	0.125 SF X 40.00 LF **5.00 SF**
TOTAL VENTILATED AREA	**9.30 SF**	**11.25 SF**

ATTIC VENT CALCULATION	AREA "B1"	
	REQUIRED	PROVIDED
-TOTAL ROOF AREA -PER FBC 2017 (1/300) -VENTILATED AREA	2,129 SF X 0.0033 **7.02 SF**	
-TOTAL SOFFIT LINEAR FOOT -OPENING NET VENTILATION -NET FREE AREA	**3.51 SF** **(50%)**	61 LF X 0.0625 SF **3.81 SF**
-NET RIDGE VENT AREA -LINEAR FEET OF VENT -NET FREE AREA	**3.51 SF** **(50%)**	0.125 SF X 32.00 LF **4.00 SF**
TOTAL VENTILATED AREA	**7.02 SF**	**7.81 SF**

ATTIC VENT CALCULATION	AREA "C1"	
	REQUIRED	PROVIDED
-TOTAL ROOF AREA -PER FBC 2017 (1/300) -VENTILATED AREA	2,420 SF X 0.0033 **8.00 SF**	
-TOTAL SOFFIT LINEAR FOOT -OPENING NET VENTILATION -NET FREE AREA	**4.00 SF** **(50%)**	74 LF X 0.0625 SF **4.63 SF**
-NET RIDGE VENT AREA -LINEAR FEET OF VENT -NET FREE AREA	**4.00 SF** **(50%)**	0.125 SF X 32.00 LF **4.00 SF**
TOTAL VENTILATED AREA	**8.00 SF**	**8.63 SF**

ATTIC VENT CALCULATION	AREA "D1"	
	REQUIRED	PROVIDED
-TOTAL ROOF AREA -PER FBC 2017 (1/300) -VENTILATED AREA	2,468 SF X 0.0033 **8.14 SF**	
-TOTAL SOFFIT LINEAR FOOT -OPENING NET VENTILATION -NET FREE AREA	**4.07 SF** **(50%)**	74 LF X 0.0625 SF **4.63 SF**
-NET RIDGE VENT AREA -LINEAR FEET OF VENT -NET FREE AREA	**4.07 SF** **(50%)**	0.125 SF X 33.00 LF **4.125 SF**
TOTAL VENTILATED AREA	**8.14 SF**	**8.755 SF**

VENTILATION SCHEDULE		
ROOF VENT	MF'GR & MODEL #	FREE AREA
RIDGE VENT	CRV100 ALUMINUM CONTINUOUS UNFILTERED RIDGE VENT OR SIMILAR	18 NET SQ.IN / LIN. FT.= 0.125 SQ. FT. / LIN. FT.
SOFFIT VENT AT EAVE	HARDIE VENTED SOFFIT	5 NET SQ.IN. / LIN. FT.= 0.0347 SQ. FT. / LIN. FT.
SOFFIT VENT AT EAVE	TAMLYN VENTED SOFFIT 2" EZ VENT OR SIMILAR	9 NET SQ.IN / LIN. FT.= 0.0625 SQ. FT. / LIN. FT.

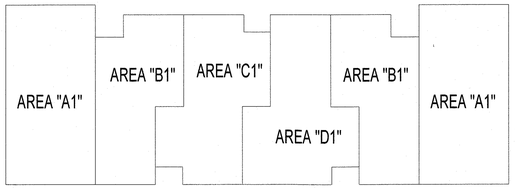

BUILDING TYPE 2 - KEY PLAN

1" = 30'-0"

ROOF NOTES:

1. PAINT ALL ROOF VENTS & PENETRATIONS TO MATCH ROOF COLOR
2. COORDINATE DOWN SPOUT DISCHARGE WITH CIVIL DRAWINGS. WHERE NOT TAKEN TO STORM, PROVIDE SPLASH BLOCK.
3. LEAVE OPENING IN MAIN ROOF SHEATHING FOR VENTILATION UNDERNEATH OVER BUILT AREAS.
4. DOWNSPOUTS AND GUTTERS SHOWN ARE MIN. REQUIREMENTS SUBJECT TO OWNER'S CONSIDERATIONS

LEGEND:

- ATTIC PARTITION. NOTE: DRAFTSTOPPING IS REQUIRED (SEE A0.02 CODE REVIEW). PARTITIONS PROVIDED FOR ACOUSTIC SEPARATION BETWEEN UNITS.
- REMOVABLE ACCESS PANEL. MIN. 36" X 36". SEE DETAIL F1/A5.05
- 3'-0" WIDE ONE ADDITIONAL SINGLE PLY TO PROVIDE A WALK PATH SURFACE AND SERVICE AREA AROUND ROOF MOUNTED EQUIPMENT, TYP.
- AREA OF TAPERED INSULATION
- AREA OF OVERBUILD 45 DEGREE KICKERS AT PARAPET
- RIDGE VENT
- D.S. DOWNSPOUT
- OFF-RIDGE VENT

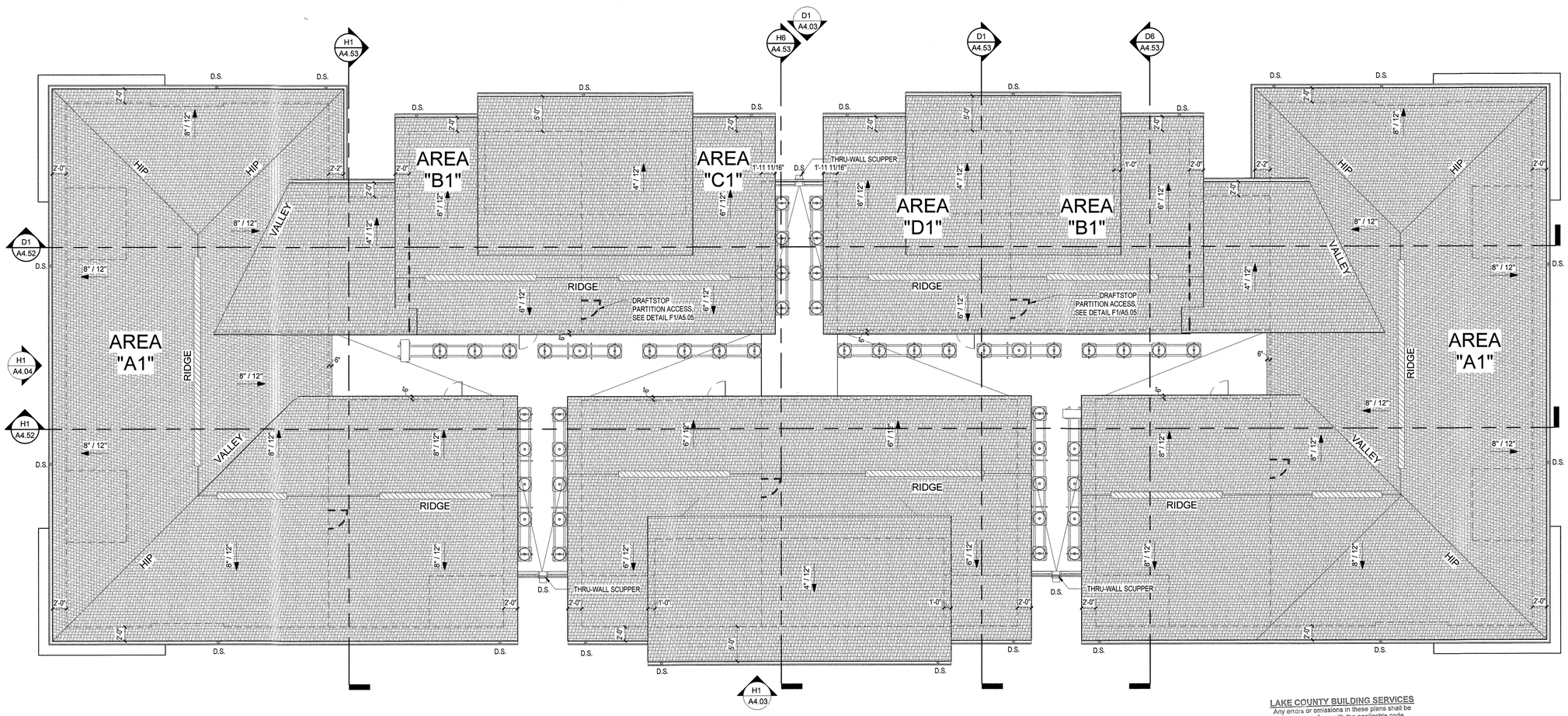

H1 BUILDING TYPE 2 - TOP ROOF

1/8" = 1'-0"

LAKE COUNTY BUILDING SERVICES

Any errors or omissions in these plans shall be made to conform with the applicable code requirements per Florida Building Code, in accordance with Section 107. Plans were reviewed for code compliance and shall be kept on job site.

RECEIVED FEB 14 2019

PERMIT REVIEW STAMP

ISSUE HISTORY

No.	Date	Description
1	02/08/2019	ISSUE FOR PERMIT

REVISION HISTORY

No.	Date	Description

© 2017 These documents and the concepts and the property of FUGLEBERG KOCH ARCHITECTS, and are issued only for the specific project listed on these drawings. Any reproductions, revisions, or modifications of these documents without the expressed written consent of Fugleberg Koch, is prohibited by law.

FUGLEBERG KOCH

2555 Temple Trail, Winter Park, FL 32789 (407) 629-0595
www.fuglebergkoch.com AA26002103

CONSULTANT

STATE OF FLORIDA MICHAEL E. GOVE REGISTERED ARCHITECT AR94111 02/08/19

SUMMER BAY APTS. II LAKE COUNTY, FL	Drawn: Author Checked: Checker Approval: Approver Date: Issue Date Project #: 5389

BUILDING TYPE 2 - TOP ROOF PLAN

A2.13

PLOTTED: 2/11/2019 2:30:23 PM

GENERAL NOTES:

1. CEILING CONTROL JOINTS TO BE 30'-0" O.C. OR UNLESS OTHERWISE NOTED
2. SEE FINISH SCHEDULE FOR CEILING FINISHES
3.DIMENSIONS ARE FROM CENTERLINE OF FIXTURE
4.SEE ELECTRICAL PLANS FOR FIXTURE SCHEDULES AND ELECTRICAL EQUIPMENT REQUIREMENTS
5.ALL FIXTURES CENTERED IN CORRIDOR

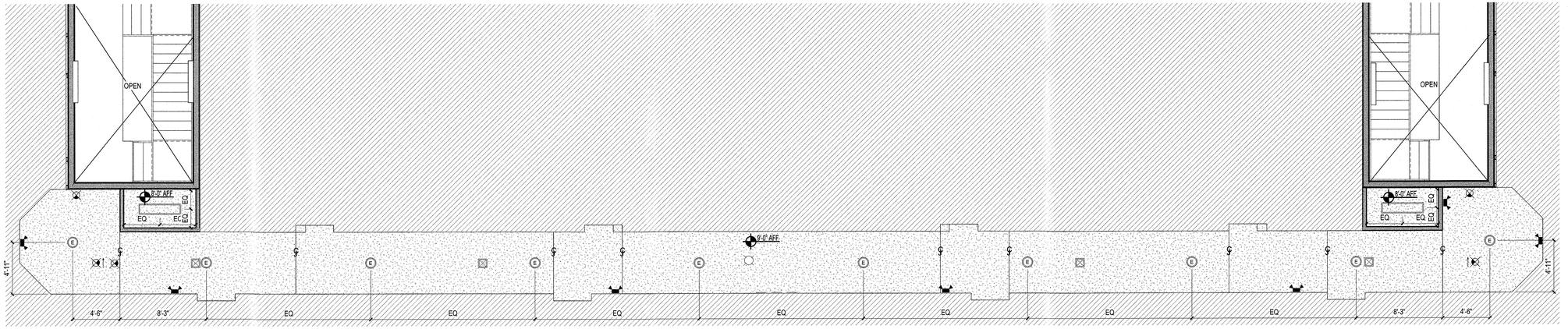

D1 BLDG TYPE 2 - LEVEL 2 - CORRIDOR
3/16" = 1'-0"

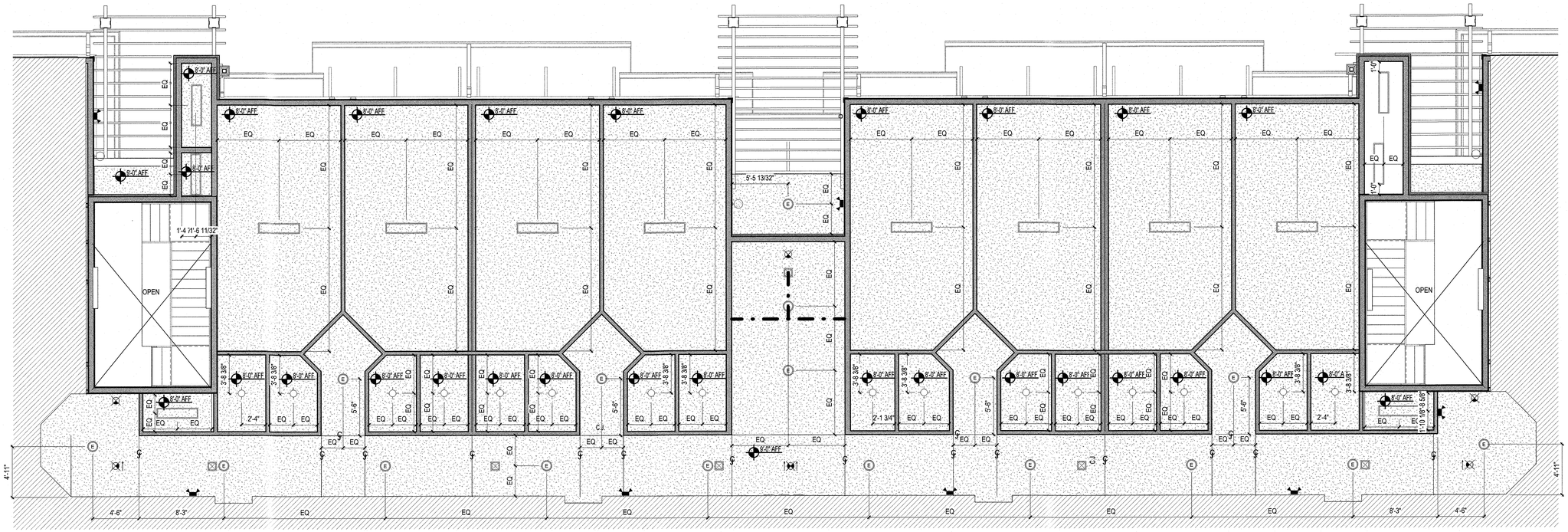

H1 BLDG TYPE 2 - GROUND LEVEL - CORRIDOR
3/16" = 1'-0"

LAKE COUNTY BUILDING SERVICES
Any errors or omissions in these plans shall be made to conform with the applicable code requirements per Florida Building Code, in accordance with Section 107. Plans were reviewed for code compliance and shall be kept on job site.

RECEIVED FEB 14 2019

RCP LEGEND

NOTE: RCP DIMS ARE FROM FINISH FACE OF WALL

- EXIT LIGHT
- LED LIGHT W/ ROUND BOX
- CEILING MOUNTED LIGHT
- EXTERIOR CEILING MOUNTED LIGHT
- PENDANT LIGHT
- SPRINKLER HEAD - CEILING MOUNTED
- SPRINKLER HEAD - SIDEWALL
- EMERGENCY LIGHT - SIDEWALL
- FLORESCENT STRIP LIGHT
- CEILING FAN
- FIXTURE VANITY LIGHT - WALL MOUNTED
- EXTERIOR LIGHT - WALL MOUNTED
- EXHAUST FAN - CEILING MOUNTED
- SQUARE SUPPLY DIFFUSER - CEILING MOUNTED
- SQUARE RETURN DIFFUSER - CEILING MOUNTED
- SUPPLY DIFFUSER - WALL MOUNTED
- EXHAUST FAN - WALL MOUNTED
- THRU-WALL GRILL
- ATTIC ACCESS PANEL
- 5/8" FR GYP BD CEILING ON RESILIENT CHANNEL - 9'-0" AFF U.N.O.

PERMIT REVIEW STAMP

ISSUE HISTORY

No.	Date	Description
1	02/08/2019	ISSUE FOR PERMIT

REVISION HISTORY

No.	Date	Description

© 2017 These documents and the contents are the property of FUGLEBERG KOCH, AA0002103, and are issued only for the specific project noted on these drawings. Any reproductions, revisions, or modifications of these documents without the expressed written consent of Fugleberg Koch is prohibited by law.

FUGLEBERG KOCH
2555 Temple Trail, Winter Park, FL 32789 (407) 629-0595
www.fuglebergkoch.com AA26002103
CONSULTANT

MICHAEL E. GOCH
LICENSE NUMBER AR94111
STATE OF FLORIDA
REGISTERED ARCHITECT
02/08/2019

SUMMER BAY APTS. II LAKE COUNTY, FL	Drawn: Author Checked: Checker Approved: Approver Date: Issue Date Project #: 5389
CORRIDOR RCP - BUILDING TYPE 2 - LEVELS 1 & 2	
A2.22	

PLOTTED: 2/11/2019 2:30:39 PM

GENERAL NOTES:

1. CEILING CONTROL JOINTS TO BE 30'-0" O.C. OR UNLESS OTHERWISE NOTED
2. SEE FINISH SCHEDULE FOR CEILING FINISHES
3. DIMENSIONS ARE FROM CENTERLINE OF FIXTURE
4. SEE ELECTRICAL PLANS FOR FIXTURE SCHEDULES AND ELECTRICAL EQUIPMENT REQUIREMENTS
5. ALL FIXTURES CENTERED IN CORRIDOR

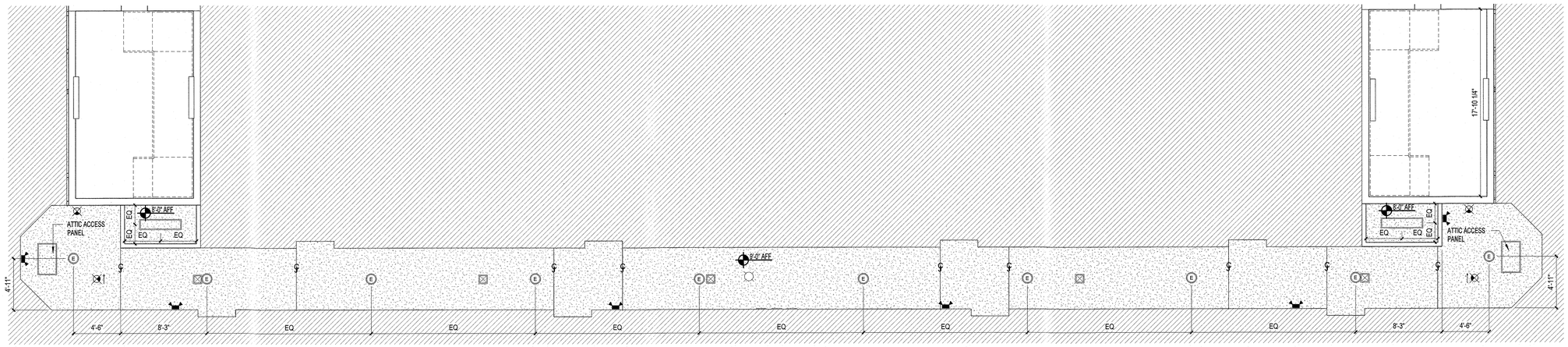

D1 BLDG TYPE 2 - LEVEL 4 - CORRIDOR
3/16" = 1'-0"

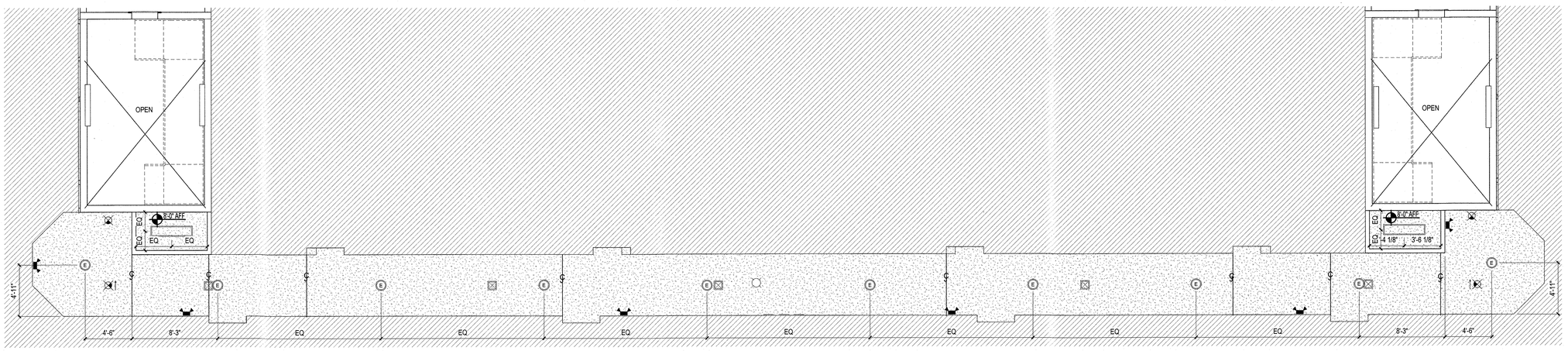

H1 BLDG TYPE 2 - LEVEL 3 - CORRIDOR
3/16" = 1'-0"

LAKE COUNTY BUILDING SERVICES
Any errors or omissions in these plans shall be made to conform with the applicable code requirements per Florida Building Code, in accordance with Section 107. Plans were reviewed for code compliance and shall be kept on job site.

RECEIVED FEB 14 2019

RCP LEGEND

NOTE: RCP DIMS ARE FROM FINISH FACE OF WALL

- EXIT LIGHT
- LED LIGHT W/ ROUND BOX
- CEILING MOUNTED LIGHT
- EXTERIOR CEILING MOUNTED LIGHT
- PENDANT LIGHT
- SPRINKLER HEAD - CEILING MOUNTED
- SPRINKLER HEAD - SIDEWALL
- EMERGENCY LIGHT - SIDEWALL
- FLORESCENT STRIP LIGHT
- CEILING FAN
- FIXTURE VANITY LIGHT - WALL MOUNTED
- EXTERIOR LIGHT - WALL MOUNTED
- EXHAUST FAN - CEILING MOUNTED
- SQUARE SUPPLY DIFFUSER - CEILING MOUNTED
- SQUARE RETURN DIFFUSER - CEILING MOUNTED
- SUPPLY DIFFUSER - WALL MOUNTED
- EXHAUST FAN - WALL MOUNTED
- THRU-WALL GRILL
- ATTIC ACCESS PANEL
- 5/8" FR GYP BD CEILING ON RESILIENT CHANNEL - 9'-0" AFF U.N.O.

PERMIT REVIEW STAMP

ISSUE HISTORY

No.	Date	Description
1	02/08/2019	ISSUE FOR PERMIT

REVISION HISTORY

No.	Date	Description

FUGLEBERG KOCH
2555 Temple Trail, Winter Park, FL 32789 (407) 629-0595
www.fuglebergkoch.com AA26002103

CONSULTANT

STATE OF FLORIDA MICHAEL E. GOVE AR94111 REGISTERED ARCHITECT
02/08/2019

SUMMER BAY APTS. II	Drawn: Author
LAKE COUNTY, FL	Checked: Checker
	Approval: Approver
	Date: Issue Date
	Project #: 5389

CORRIDOR RCP - BUILDING TYPE 2 - LEVELS 3 & 4

A2.23

PLOTTED: 2/11/2019 2:30:53 PM

© 2017 These documents and their contents are the property of FUGLEBERG KOCH - AA26002103, and are issued only for the specific project noted on these drawings. Any reproductions, revisions, or modifications of these documents without the expressed written consent of Fugleberg Koch, is prohibited by law.

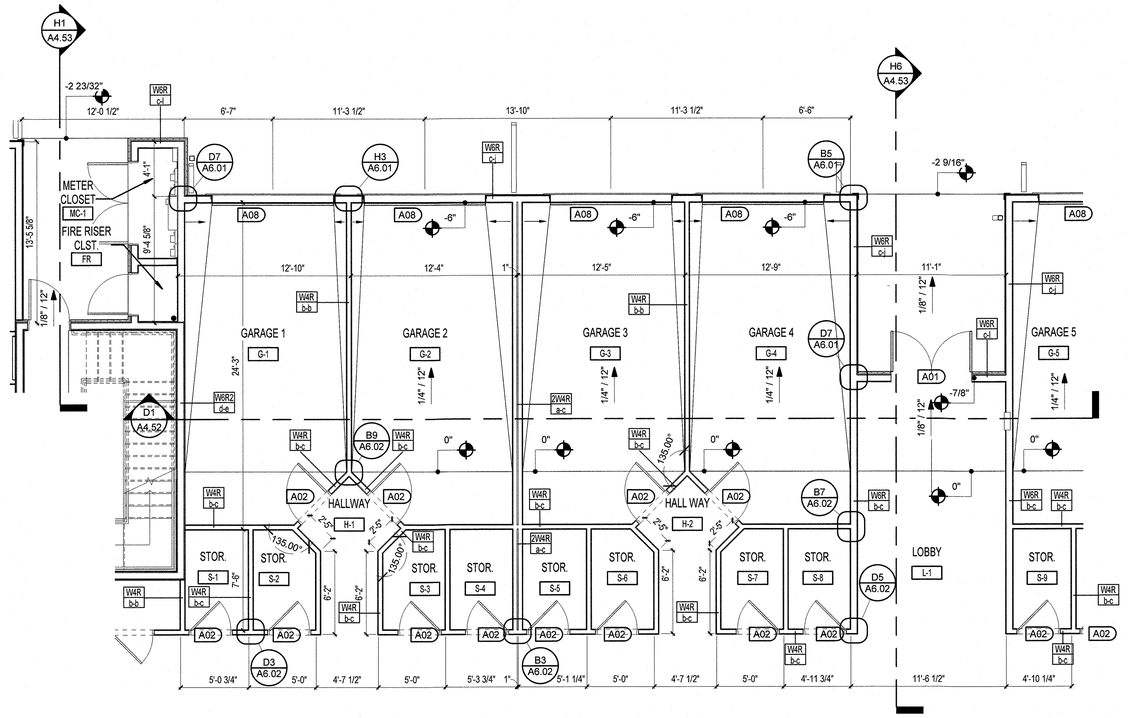

D1 ENLARGED GARAGE PLAN - BUILDING TYPE 2
3/16" = 1'-0"

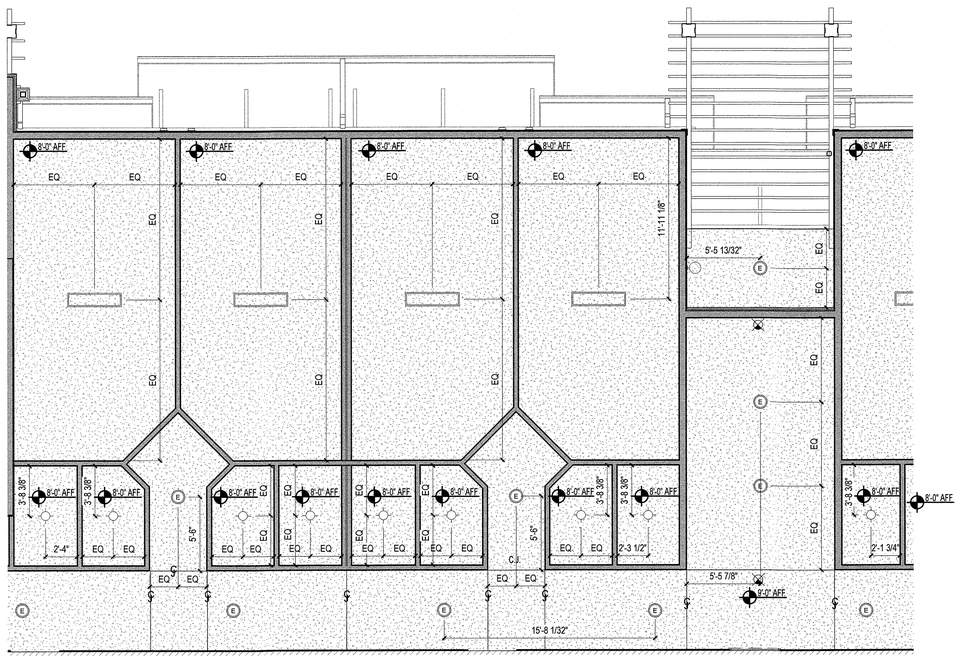

H1 BLDG TYPE 2 - GROUND LEVEL - CORRIDOR
3/16" = 1'-0"

LAKE COUNTY BUILDING SERVICES
Any errors or omissions in these plans shall be made to conform with the applicable code requirements per Florida Building Code, in accordance with Section 107. Plans were reviewed for code compliance and shall be kept on job site.

RECEIVED FEB 14 2019

RCP LEGEND

NOTE: RCP DIMS ARE FROM FINISH FACE OF WALL

- EXIT LIGHT
- LED LIGHT W/ ROUND BOX
- CEILING MOUNTED LIGHT
- EXTERIOR CEILING MOUNTED LIGHT
- PENDANT LIGHT
- SPRINKLER HEAD - CEILING MOUNTED
- SPRINKLER HEAD - SIDEWALL
- EMERGENCY LIGHT - SIDEWALL
- FLORESCENT STRIP LIGHT
- CEILING FAN
- FIXTURE VANITY LIGHT - WALL MOUNTED
- EXTERIOR LIGHT - WALL MOUNTED
- EXHAUST FAN - CEILING MOUNTED
- SQUARE SUPPLY DIFFUSER - CEILING MOUNTED
- SQUARE RETURN DIFFUSER - CEILING MOUNTED
- SUPPLY DIFFUSER - WALL MOUNTED
- EXHAUST FAN - WALL MOUNTED
- THRU-WALL GRILL
- ATTIC ACCESS PANEL
- 5/8" FR GYP BD CEILING ON RESILIENT CHANNEL - 9'-0" AFF U.N.O.

PERMIT REVIEW STAMP

ISSUE HISTORY

No.	Date	Description
1	02/08/2019	ISSUE FOR PERMIT

REVISION HISTORY

No.	Date	Description

© 2017 These documents and their contents are the property of FUGLEBERG KOCH - AA26002103, and are issued only for the specific project noted on these drawings. Any reproductions, revisions, or modifications of these documents without the expressed written consent of Fugleberg Koch, is prohibited by law.

FUGLEBERG KOCH
2555 Temple Trail, Winter Park, FL 32789 (407) 629-0595
www.fuglebergkoch.com AA26002103
CONSULTANT

MICHAEL E. GOVE
FLORIDA REGISTERED AR94111
STATE OF FLORIDA
MICHAEL E. GOVE
AR94111
REGISTERED ARCHITECT
02/08/2019

SUMMER BAY APTS. II
LAKE COUNTY, FL

Drawn:	Author
Checked:	Checker
Approval:	Approver
Date:	Issue Date
Project #:	5389

ENLARGED GARAGE PLANS - BUILDING TYPE 2

A2.31

PLOTTED: 2/11/2019 2:31:02 PM

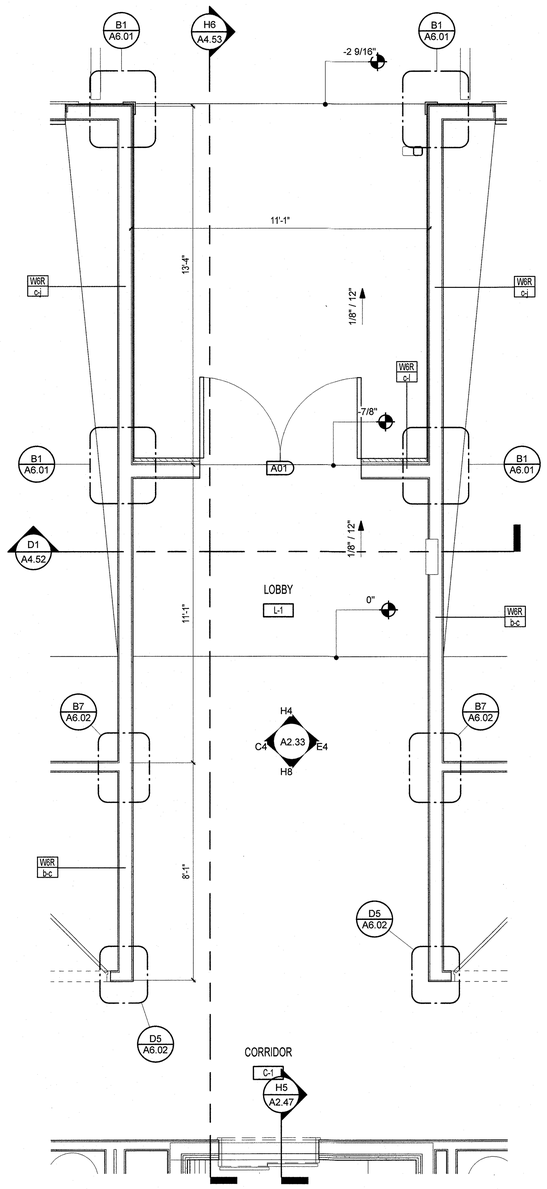

H1 ENLARGED ENTRY PLAN - BUILDING TYPE 2
3/8" = 1'-0"

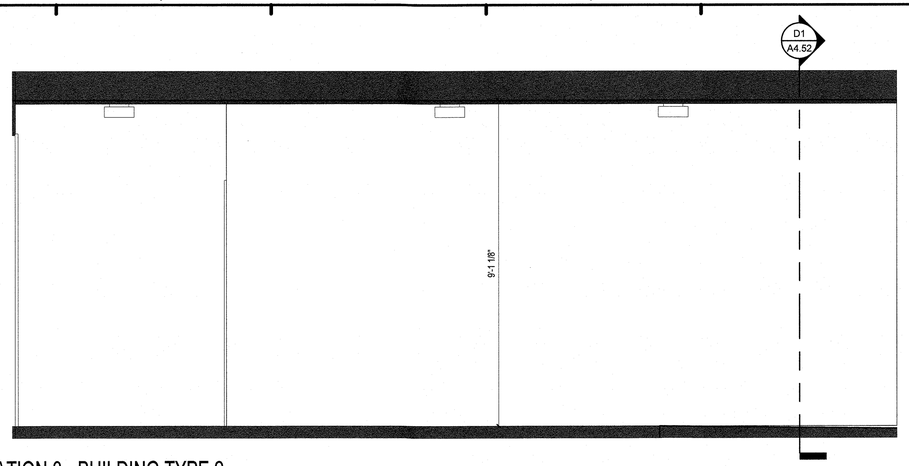

C4 ENLARGED ENTRY ELEVATION 3 - BUILDING TYPE 2
1/2" = 1'-0"

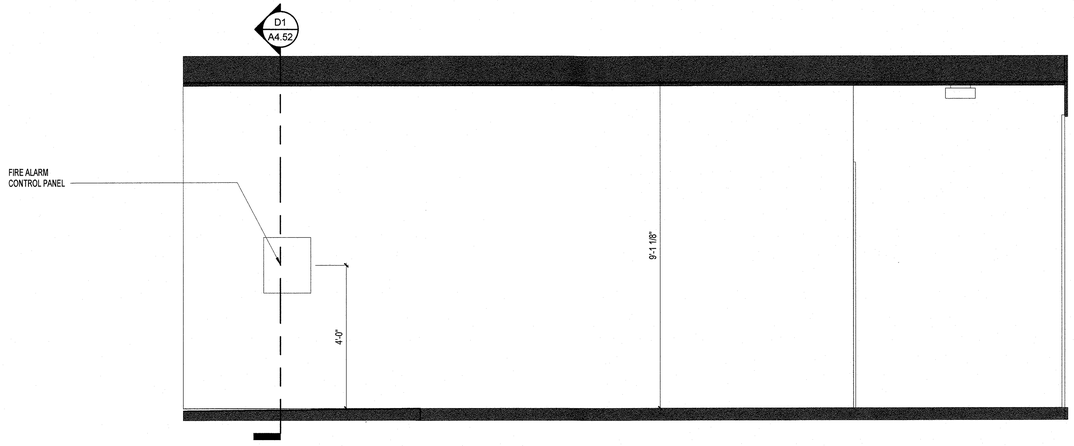

E4 ENLARGED ENTRY ELEVATION 1 - BUILDING TYPE 2
1/2" = 1'-0"

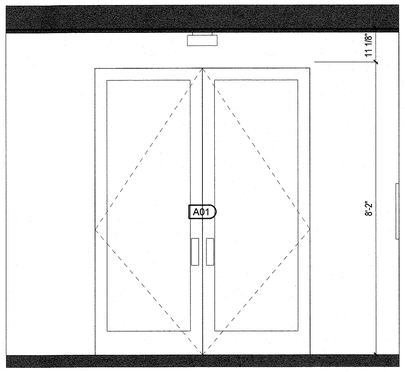

H4 ENLARGED ENTRY ELEV. 4 - BLDG. TYPE 2
1/2" = 1'-0"

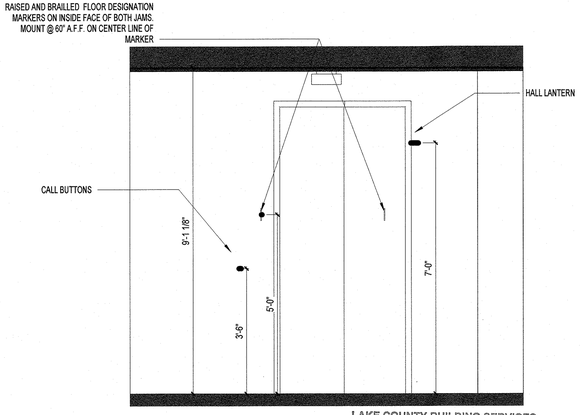

LAKE COUNTY BUILDING SERVICES
Any errors or omissions in these plans shall be made to conform with the applicable code requirements per Florida Building Code, in accordance with Section 107. Plans were reviewed for code compliance and shall be kept on job site.

H8 ENLARGED ENTRY ELEV. 2 - BLDG. TYPE 2
1/2" = 1'-0"

RECEIVED FEB 14 2019

PERMIT REVIEW STAMP

ISSUE HISTORY

No.	Date	Description
1	02/08/2019	ISSUE FOR PERMIT

REVISION HISTORY

No.	Date	Description

© 2017 These documents and their contents are the property of FUGLEBERG KOCH - AA26002103, and are issued only for the specific project noted on these drawings. Any reproductions, revisions, or modifications of these documents without the expressed written consent of Fugleberg Koch, is prohibited by law.

FUGLEBERG KOCH
2555 Temple Trail, Winter Park, FL 32789 (407) 629-0595
www.fuglebergkoch.com AA26002103

CONSULTANT

MICHAEL E. GOVE
FLORIDA LICENSE # AR94111
STATE OF FLORIDA
MICHAEL E. GOVE
AR94111
REGISTERED ARCHITECT
02/08/2019

SUMMER BAY APTS. II
LAKE COUNTY, FL

Drawn:	Author
Checked:	Checker
Approval:	Approver
Date:	Issue Date
Project #:	5389

ENLARGED ENTRY PLANS - BUILDING TYPE 2

A2.33

PLOTTED: 2/11/2019 2:31:35 PM

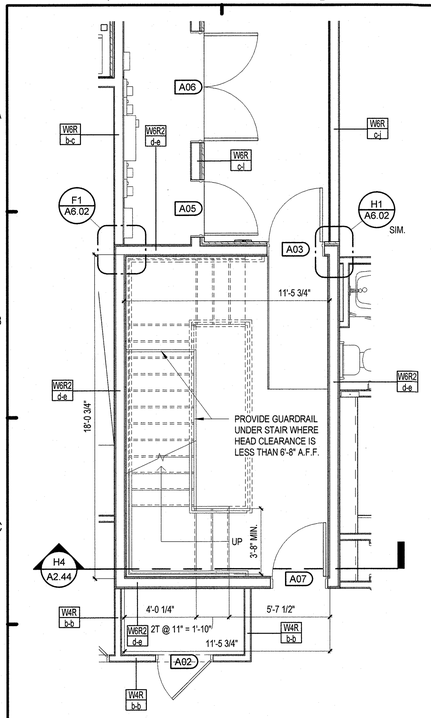

D1 LEVEL 1 ENLARGED PLAN - STAIR D
1/4" = 1'-0" BUILDING TYPE 2 H1/ A2.08

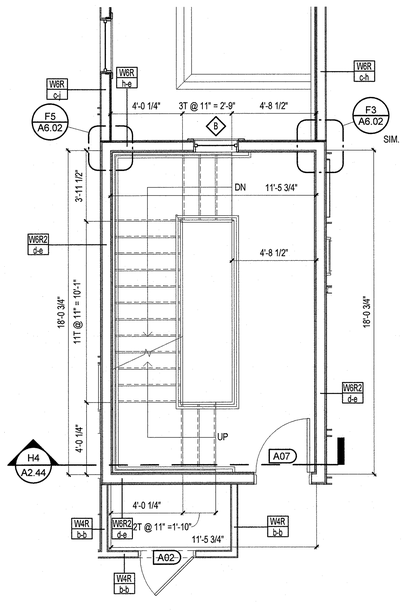

D3 LEVEL 2 ENLARGED PLAN - STAIR D
1/4" = 1'-0" BUILDING TYPE 2 H1/ A2.09

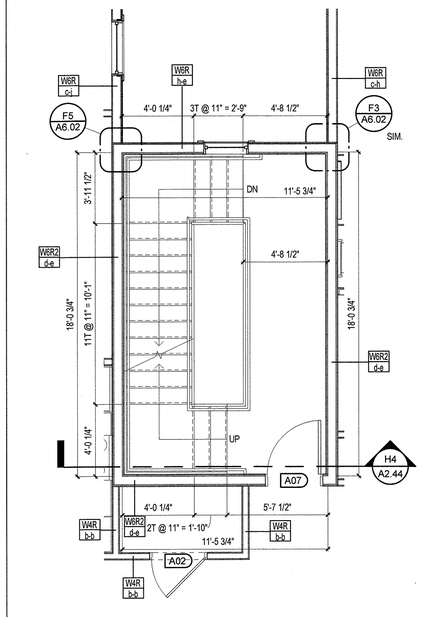

D5 LEVEL 3 ENLARGED PLAN - STAIR D
1/4" = 1'-0" BUILDING TYPE 2 H1/ A2.10

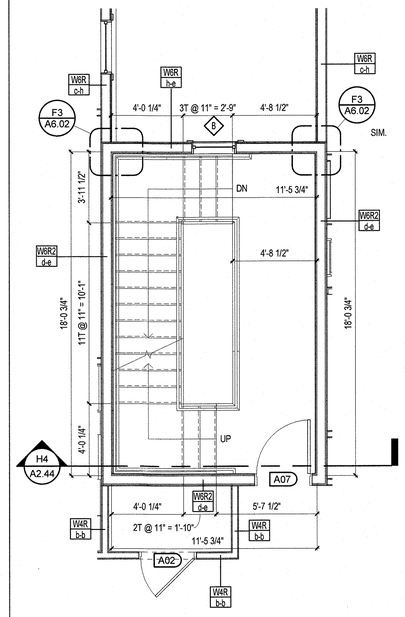

D7 LEVEL 4 ENLARGED PLAN - STAIR D
1/4" = 1'-0" BUILDING TYPE 2 H1/ A2.11

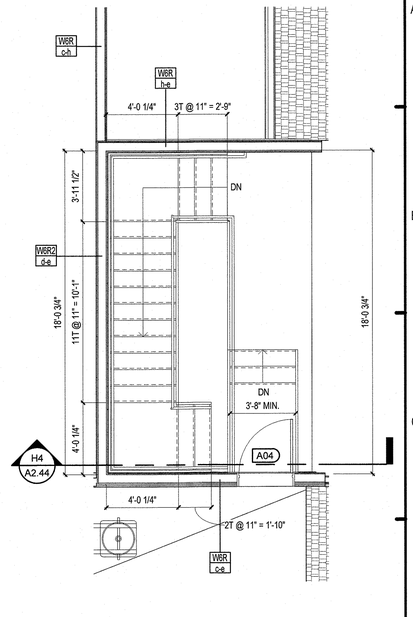

D9 ROOF LEVEL ENLARGED PLAN - STAIR D
1/4" = 1'-0" BUILDING TYPE 2 H1/ A2.12

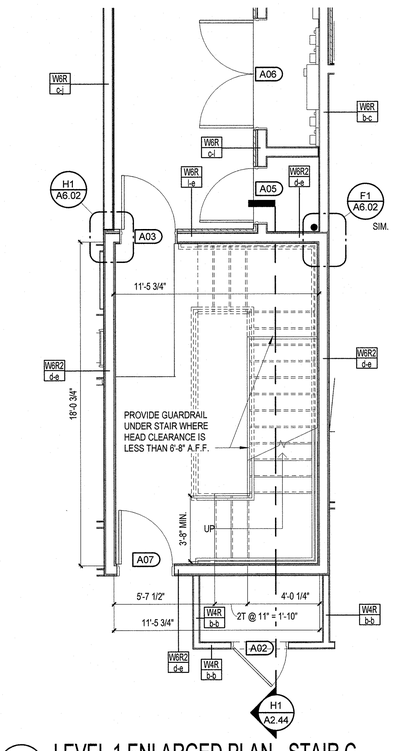

H1 LEVEL 1 ENLARGED PLAN - STAIR C
1/4" = 1'-0" BUILDING TYPE 2 H1/ A2.08

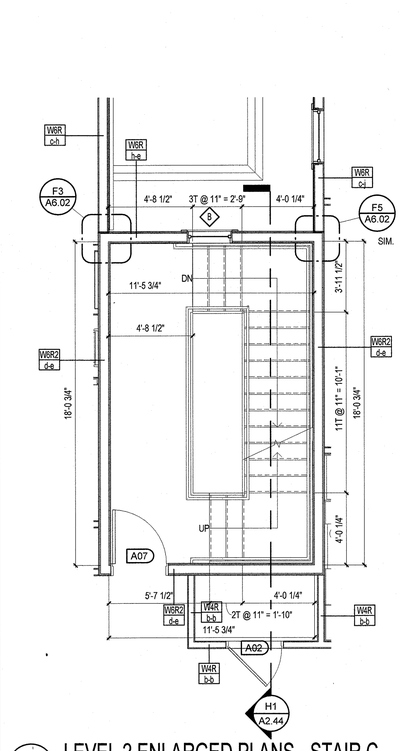

H3 LEVEL 2 ENLARGED PLANS - STAIR C
1/4" = 1'-0" BUILDING TYPE 2 H1/ A2.09

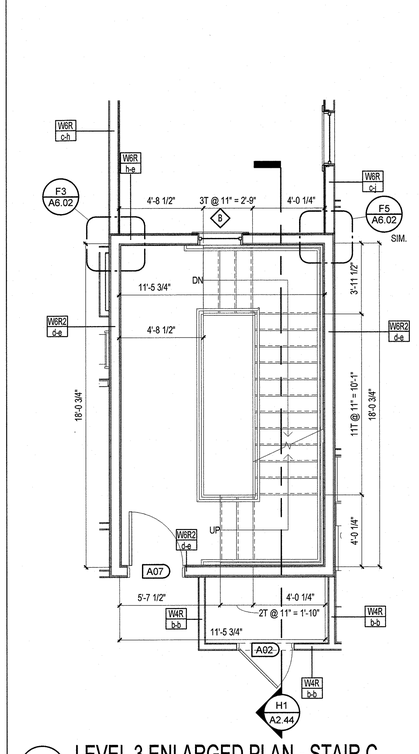

H5 LEVEL 3 ENLARGED PLAN - STAIR C
1/4" = 1'-0" BUILDING TYPE 2 H1/ A2.10

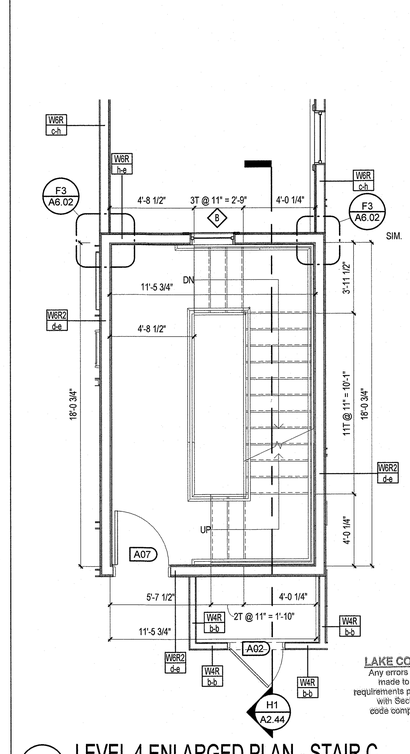

H7 LEVEL 4 ENLARGED PLAN - STAIR C
1/4" = 1'-0" BUILDING TYPE 2 H1/ A2.11

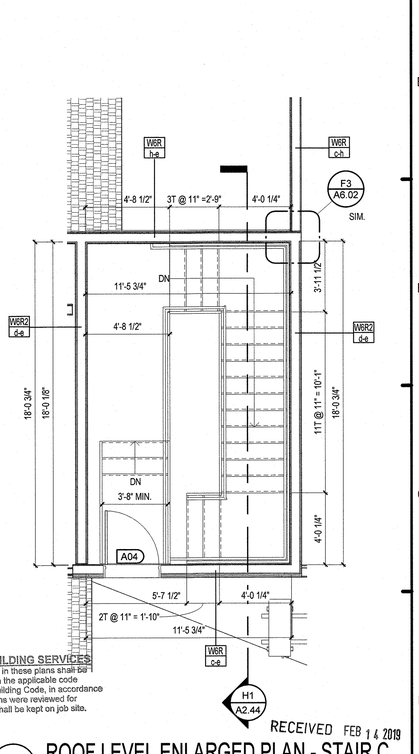

H9 ROOF LEVEL ENLARGED PLAN - STAIR C
1/4" = 1'-0" BUILDING TYPE 2 H1/ A2.12

LAKE COUNTY BUILDING SERVICES
Any errors or omissions in these plans shall be made to conform with the applicable code requirements per Florida Building Code, in accordance with Section 107. Plans were reviewed for code compliance and shall be kept on job site.

RECEIVED FEB 14 2019

PERMIT REVIEW STAMP

ISSUE HISTORY

No.	Date	Description
1	02/08/2019	ISSUE FOR PERMIT

REVISION HISTORY

No.	Date	Description

© 2011 These documents and their contents are the property of FUGLEBERG KOCH, P.A. (2002003) and are issued only for the specific project noted on these drawings. Any reproductions, revisions, or modifications of these documents without the expressed written consent of Fugleberg Koch, is prohibited by law.

FUGLEBERG KOCH

2555 Temple Trail, Winter Park, FL 32789 (407) 629-0595
www.fuglebergkoch.com AA26002103

CONSULTANT

STATE OF FLORIDA MICHAEL E. GOVE REGISTERED ARCHITECT AR94111 2/8/2019

SUMMER BAY APTS. II
LAKE COUNTY, FL

Drawn:	Author
Checked:	Checker
Approval:	Approver
Date:	Issue Date
Project #:	5389

BUILDING TYPE 2 - STAIR PLANS

A2.43

PLOTTED: 2/11/2019 2:31:57 PM

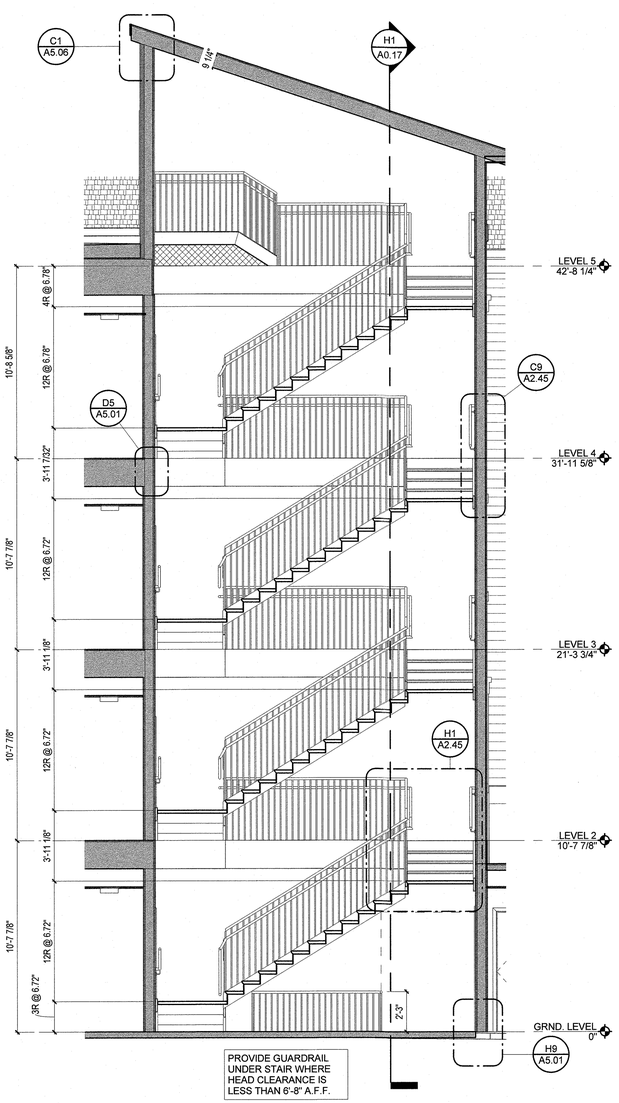

H1 SECTION - STAIR C / BUILDING TYPE 2
1/4" = 1'-0"
H1/ A2.43

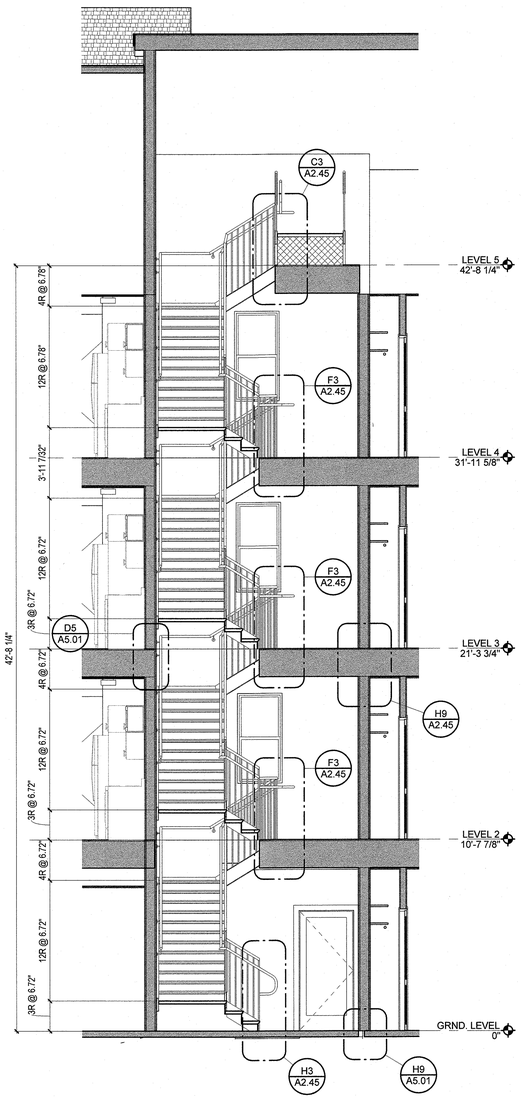

H4 SECTION - STAIR D / BUILDING TYPE 2
1/4" = 1'-0"
D1/ A2.43

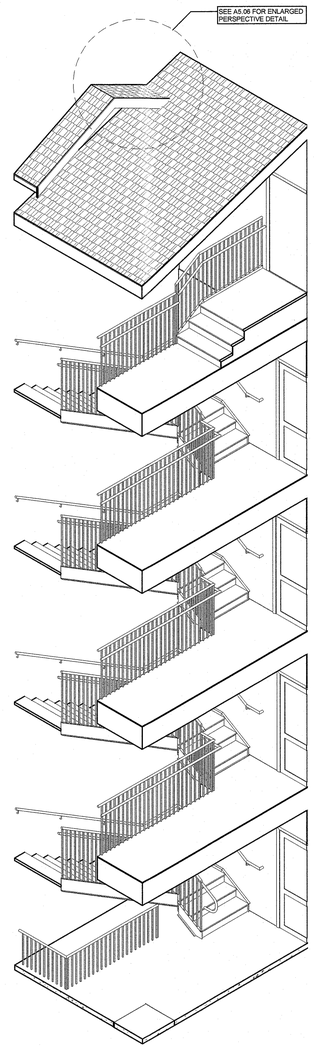

H6 STAIR AXON. - STAIR C / BUILDING TYPE 2

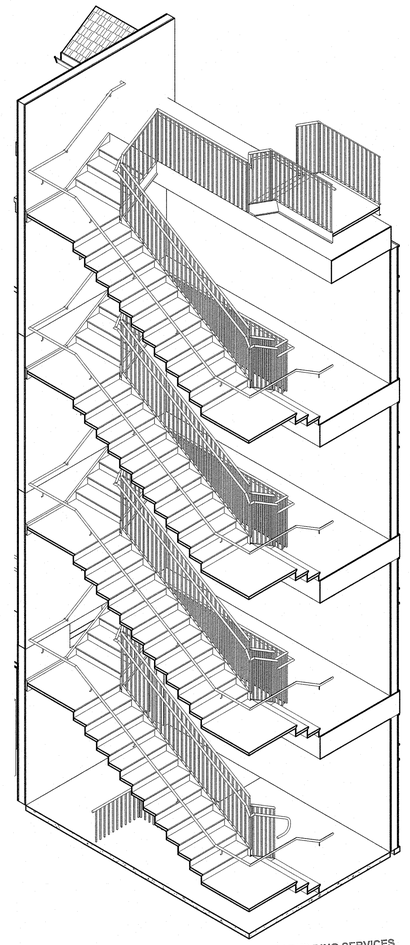

LAKE COUNTY BUILDING SERVICES
Any errors or omissions in these plans shall be made to conform with the applicable code requirements per Florida Building Code, in accordance with Section 107. Plans were reviewed for code compliance and shall be kept on job site.

H8 STAIR AXON. - STAIR D / BUILDING TYPE 2

RECEIVED FEB 14 2019

PERMIT REVIEW STAMP

ISSUE HISTORY

No.	Date	Description
1	02/08/2019	ISSUE FOR PERMIT

REVISION HISTORY

No.	Date	Description

FUGLEBERG KOCH
2555 Temple Trail, Winter Park, FL 32789 (407) 629-0595
www.fuglebergkoch.com AA26002103

CONSULTANT

MICHAEL E. GOVE
FLORIDA LICENSE #AR94111
02/08/2019
STATE OF FLORIDA
MICHAEL E. GOVE
AR94111
REGISTERED ARCHITECT

SUMMER BAY APTS. II
LAKE COUNTY, FL

Drawn:	Author
Checked:	Checker
Approval:	Approver
Date:	Issue Date
Project #:	5389

BUILDING TYPE 2 - STAIR SECTIONS

A2.44

PLOTTED: 2/11/2019 2:32:38 PM

© 2017 These documents and their contents are the property of FUGLEBERG KOCH - AA26002103, and are issued only for the specific project noted on these drawings. Any reproductions, revisions, or modifications of these documents without the expressed written consent of Fugleberg Koch, is prohibited by law.

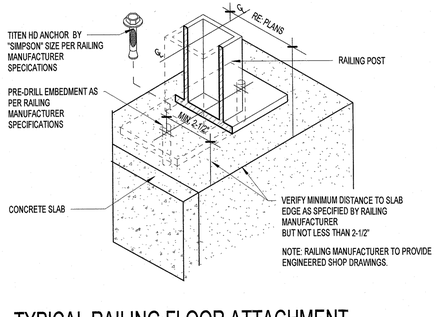

B1 TYPICAL RAILING FLOOR ATTACHMENT
3" = 1'-0"

AT 1ST LEVEL CONCRETE SLAB

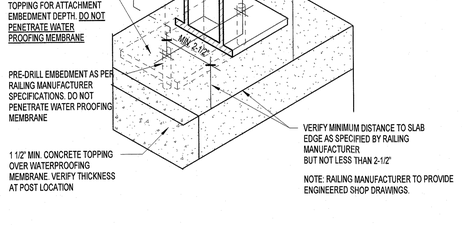

D1 TYPICAL RAILING FLOOR ATTACHMENT
3" = 1'-0"

AT RAISED FRAME

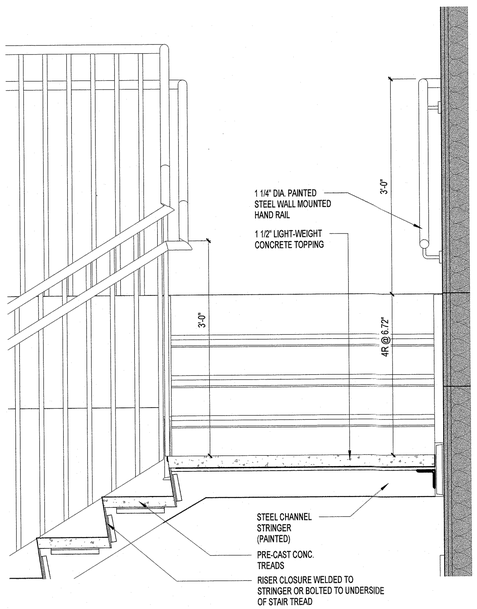

H1 STAIR DETAIL - LEVEL 2 / 3 / 4 / 5 INT. LANDING
1" = 1'-0"

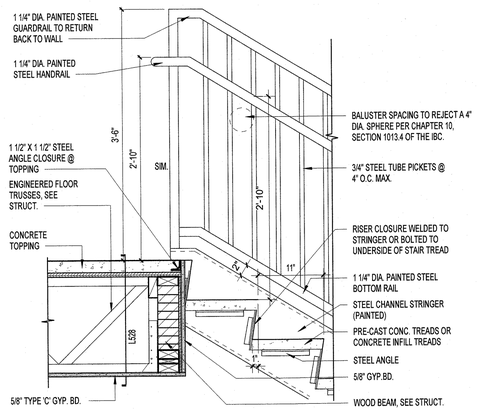

C3 STAIR DETAIL @ LEVEL 5 LANDING
1" = 1'-0"

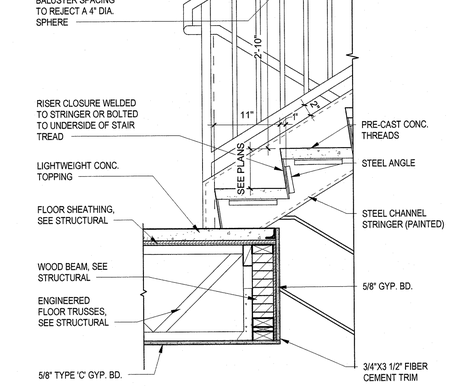

F3 STAIR DETAIL @ LEVEL 2 / 3 / 4 LANDING
1" = 1'-0"

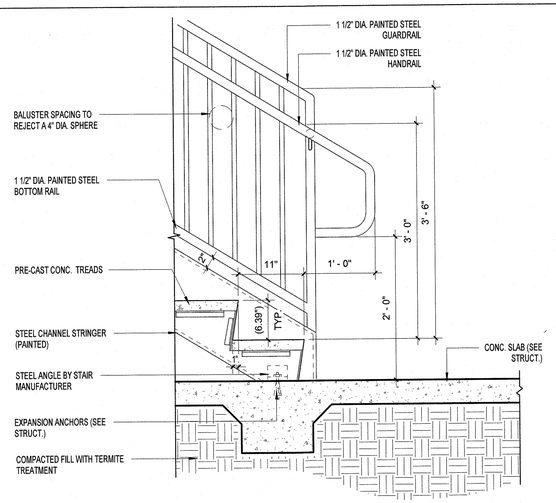

H3 STAIR DETAIL @ LEVEL 1
1" = 1'-0"

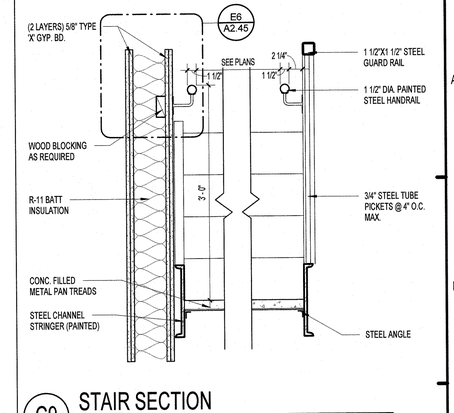

C9 STAIR SECTION
1" = 1'-0"

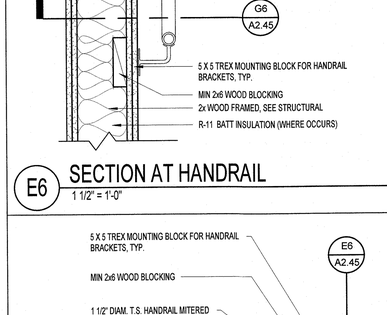

E6 SECTION AT HANDRAIL
1 1/2" = 1'-0"

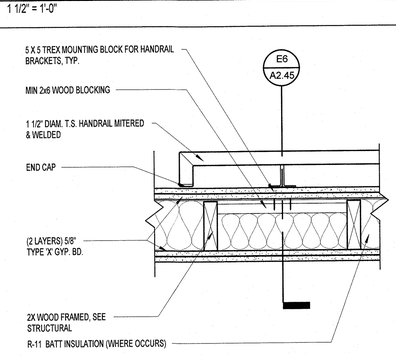

G6 PLAN DETAIL AT HANDRAIL
1 1/2" = 1'-0"

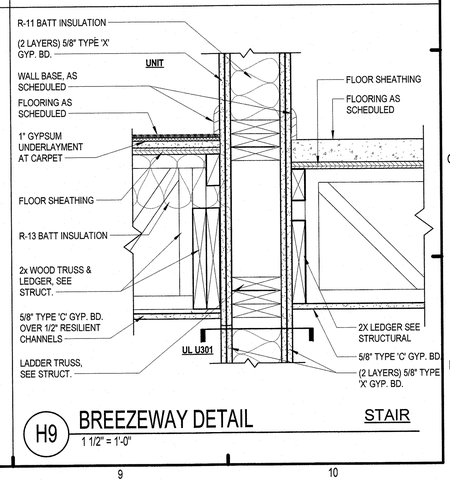

H9 BREEZEWAY DETAIL
1 1/2" = 1'-0"

STAIR

LAKE COUNTY BUILDING SERVICES
Any errors or omissions in these plans shall be made to conform with the applicable code requirements per Florida Building Code, in accordance with Section 107. Plans were reviewed for code compliance and shall be kept on job site.

RECEIVED FEB 14 2019

PERMIT REVIEW STAMP

ISSUE HISTORY

No.	Date	Description
1	02/08/2019	ISSUE FOR PERMIT

REVISION HISTORY

No.	Date	Description

© 2017 These documents and their contents are the property of FUGLEBERG KOCH - AA26002103, and are issued only for the specific project noted on these drawings. Any reproduction, revisions, or modifications of these documents without the expressed written consent of Fugleberg Koch, is prohibited by law.

FUGLEBERG KOCH
2555 Temple Trail, Winter Park, FL 32789 (407) 629-0595
www.fuglebergkoch.com AA26002103
CONSULTANT

MICHAEL E. GOVE
STATE OF FLORIDA
REGISTERED ARCHITECT
AR94111
02/8/2019

Drawn:	Author
Checked:	Checker
Approved:	Approver
Date:	Issue Date
Project #:	5389

SUMMER BAY APTS. II
LAKE COUNTY, FL

STAIR DETAILS

A2.45

PLOTTED: 2/11/2019 2:32:46 PM

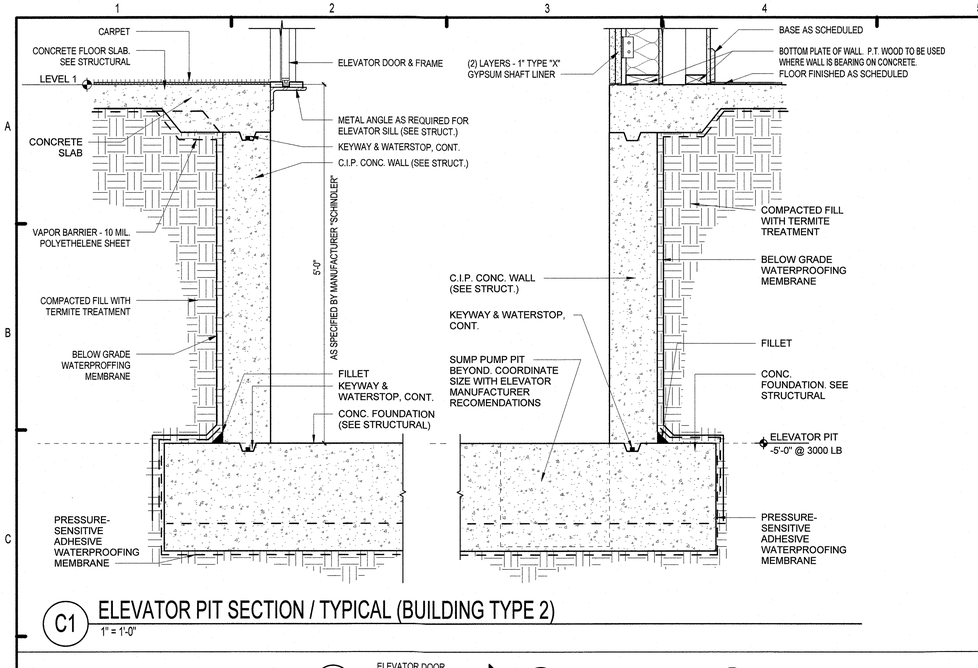

C1 ELEVATOR PIT SECTION / TYPICAL (BUILDING TYPE 2)
1" = 1'-0"

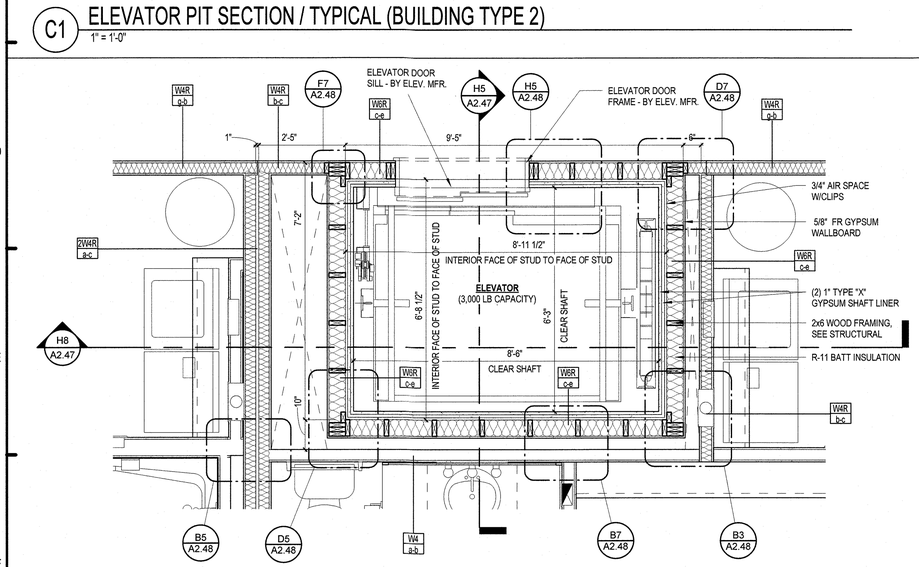

F1 ENLARGED ELEVATOR PLAN - LEVELS 1-2-3-4 / BUILDING TYPE 2
1/2" = 1'-0"

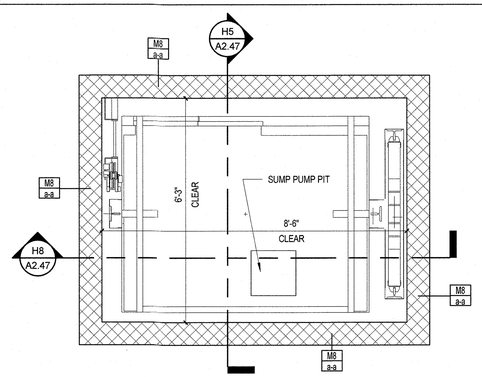

H1 ENLARGED ELEVATOR PLAN - PIT LEVEL / BUILDING TYPE 2
1/2" = 1'-0"

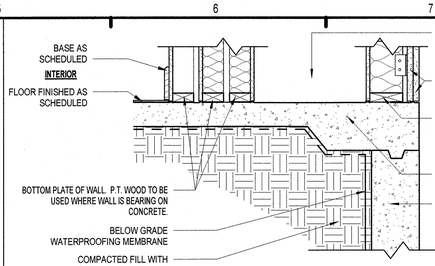

B5 ELEVATOR PIT SECTION / BUILDING TYPE 2
1" = 1'-0"

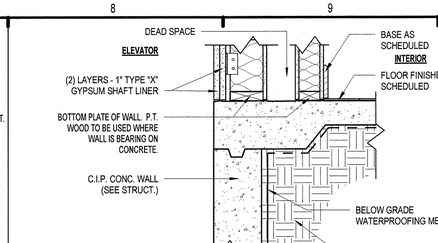

B8 ELEVATOR PIT SECTION / BUILDING TYPE 2
1" = 1'-0"

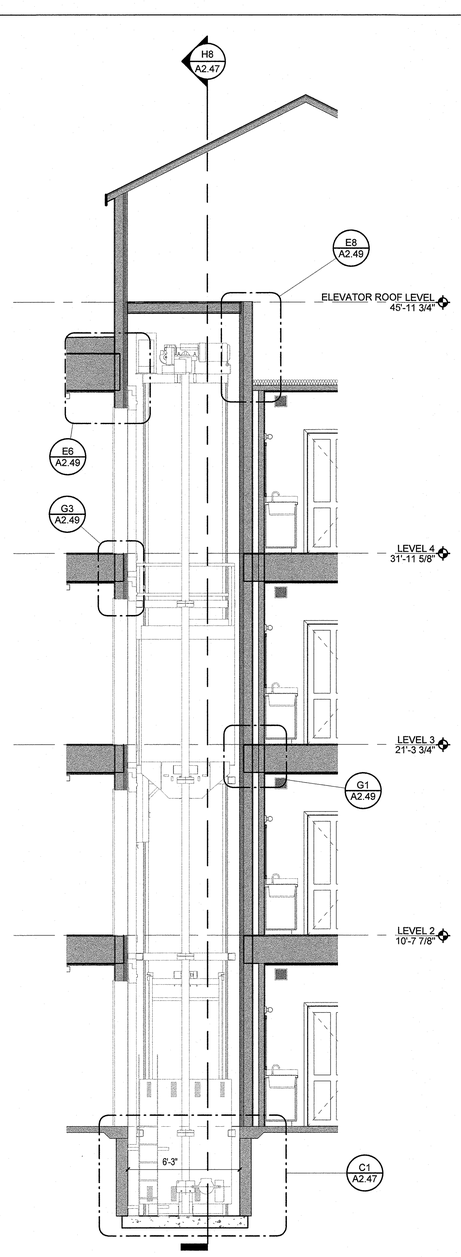

H5 ELEVATOR SHAFT - SECTION 1 / BLDG. 2
1/4" = 1'-0"

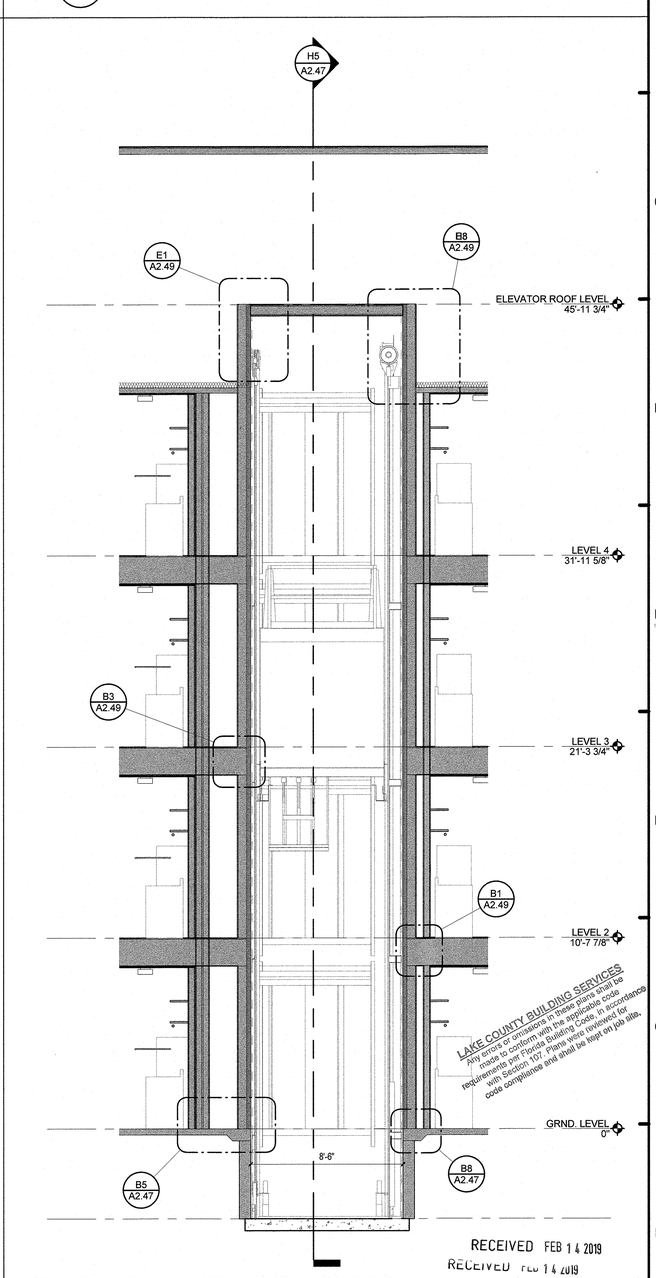

H8 ELEVATOR SHAFT - SECTION 2 / BLDG. 2
1/4" = 1'-0"

RECEIVED FEB 14 2019

LAKE COUNTY BUILDING SERVICES
Any errors or omissions in these plans shall be made to conform with the applicable code requirements per Florida Building Code, in accordance with Section 107. Plans were reviewed for code compliance and shall be kept on job site.

PERMIT REVIEW STAMP

ISSUE HISTORY

No.	Date	Description
1	02/08/2019	ISSUE FOR PERMIT

REVISION HISTORY

No.	Date	Description

© 2017 These documents and their contents are the property of FUGLEBERG KOCH ARCHITECTS, INC. Any reproduction or distribution of these documents or their contents without the written consent of FUGLEBERG KOCH ARCHITECTS, INC. is prohibited. Any unauthorized use shall be at the user's sole risk and without liability to FUGLEBERG KOCH ARCHITECTS, INC.

FUGLEBERG KOCH
2555 Temple Trail, Winter Park, FL 32789 (407) 629-0595
www.fuglebergkoch.com AA26002103
CONSULTANT

STATE OF FLORIDA MICHAEL E. GOINE REGISTERED ARCHITECT AR94111 02/08/2019

SUMMER BAY APTS. II	Drawn: Author
LAKE COUNTY, FL	Checked: Checker
	Approval: Approver
	Date: Issue Date
	Project #: 5389

BLDG. TYPE 2 - ELEVATOR PLANS & SECTIONS

A2.47

PLOTTED: 2/11/2019 2:33:10 PM

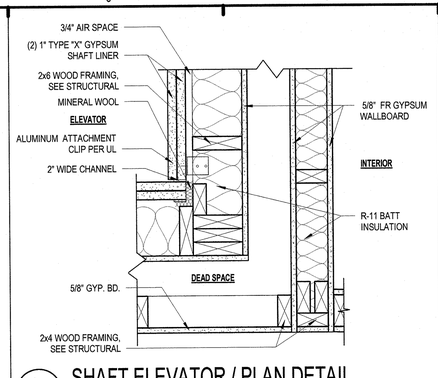

B3 SHAFT ELEVATOR / PLAN DETAIL
1 1/2" = 1'-0"

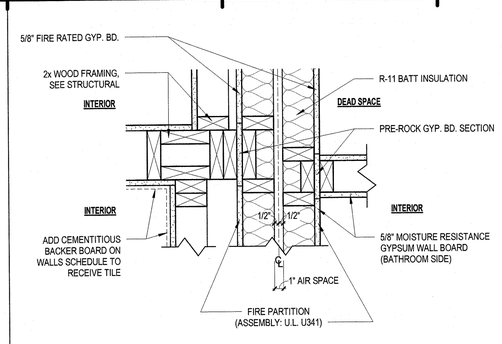

B5 SHAFT ELEVATOR / PLAN DETAIL
1 1/2" = 1'-0"

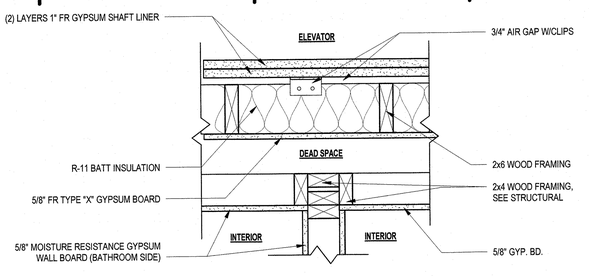

B7 SHAFT ELEVATOR / PLAN DETAIL
1 1/2" = 1'-0"
F1/ A2.47

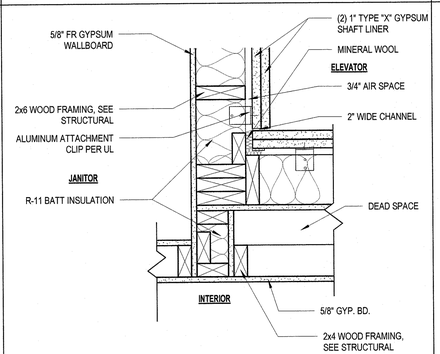

D3 SHAFT ELEVATOR / PLAN DETAIL
1 1/2" = 1'-0"

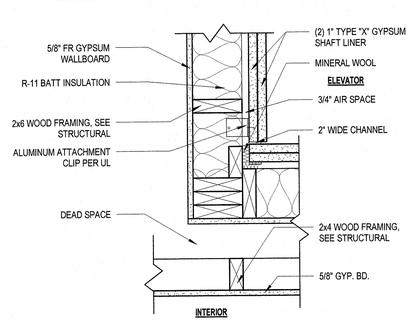

D5 SHAFT ELEVATOR / PLAN DETAIL
1 1/2" = 1'-0"

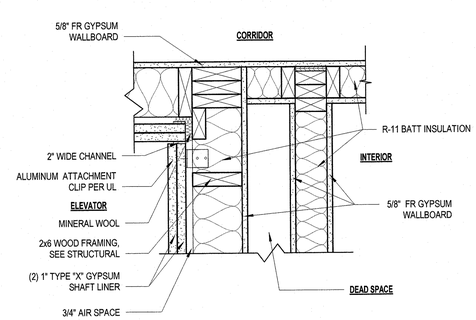

D7 SHAFT ELEVATOR / PLAN DETAIL
1 1/2" = 1'-0"

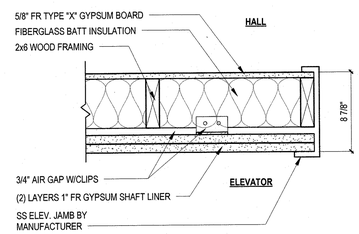

F5 ELEVATOR JAM @ STUD WALL
1 1/2" = 1'-0"

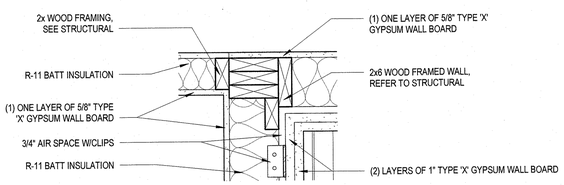

F7 SHAFT ELEVATOR / PLAN DETAIL
1 1/2" = 1'-0"

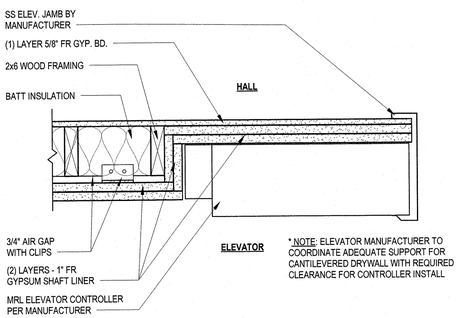

H5 ELEV. JAMB @ STUD WALL W/ CONTROLLER
1 1/2" = 1'-0"

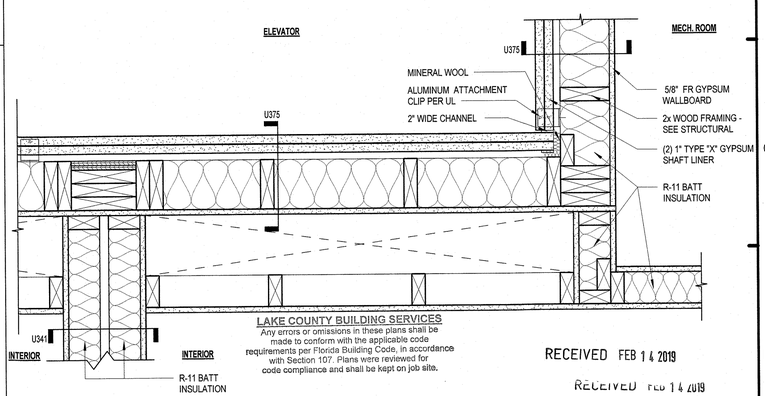

H7 ELEVATOR SHAFT / UNIT WALL PLAN DETAIL (BLDG. TYPE 1)
1 1/2" = 1'-0"

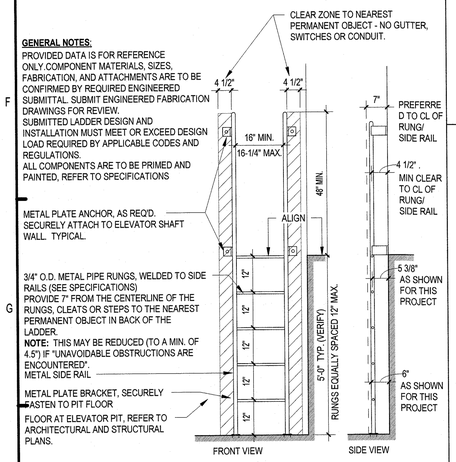

H1 ELEVATOR LADDER DETAIL
1/2" = 1'-0"

PERMIT REVIEW STAMP

ISSUE HISTORY

No.	Date	Description
1	02/08/2019	ISSUE FOR PERMIT

REVISION HISTORY

No.	Date	Description

FUGLEBERG KOCH
2555 Temple Trail, Winter Park, FL 32789 (407) 629-0595
www.fuglebergkoch.com AA26002103
CONSULTANT

MICHAEL E. GOVE
LICENSE NUMBER AR94111
STATE OF FLORIDA
MICHAEL E. GOVE
AR94111
REGISTERED ARCHITECT
02/08/2019

SUMMER BAY APTS. II
LAKE COUNTY, FL

Drawn:	Author
Checked:	Checker
Approval:	Approver
Date:	Issue Date
Project #:	5389

ELEVATOR DETAILS

A2.48

PLOTTED: 2/11/2019 2:33:10 PM

These documents are the property of FUGLEBERG KOCH, ARCHITECTS, and are issued only for the specific project shown on these drawings. Any reproduction, modification of these documents without the expressed written consent of Fugleberg Koch, Architects is prohibited. © Fugleberg Koch, Inc.

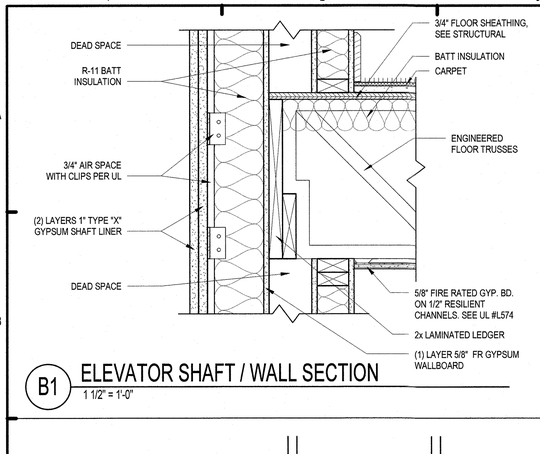

B1 ELEVATOR SHAFT / WALL SECTION
1 1/2" = 1'-0"

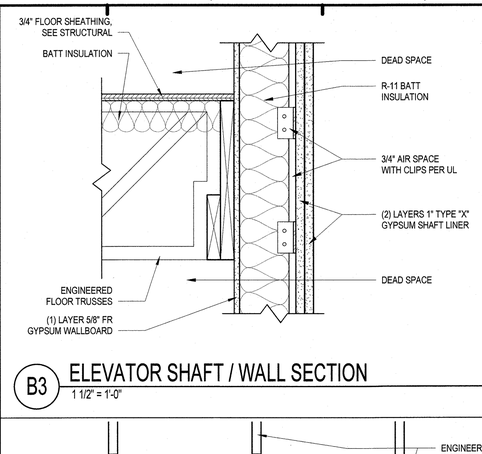

B3 ELEVATOR SHAFT / WALL SECTION
1 1/2" = 1'-0"

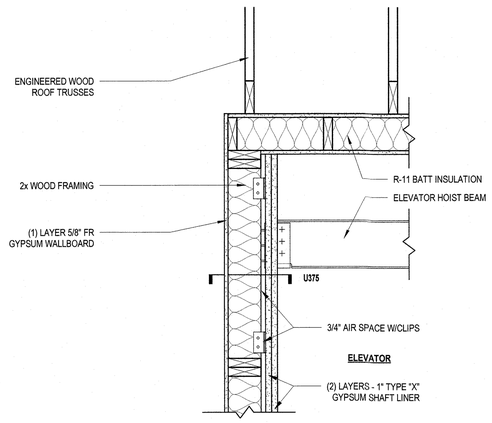

E1 ELEVATOR SHAFT / WALL SECTION
1" = 1'-0"

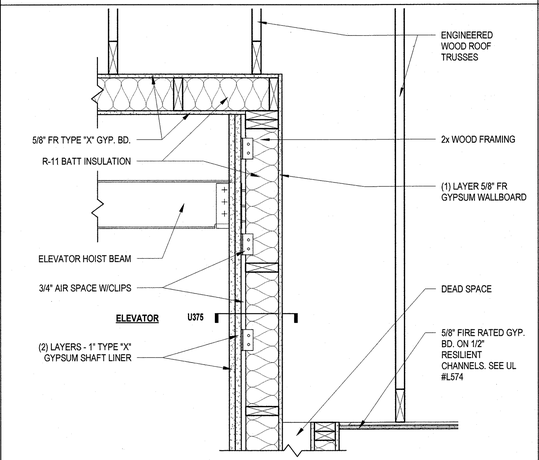

E3 ELEVATOR SHAFT / WALL SECTION
1" = 1'-0"

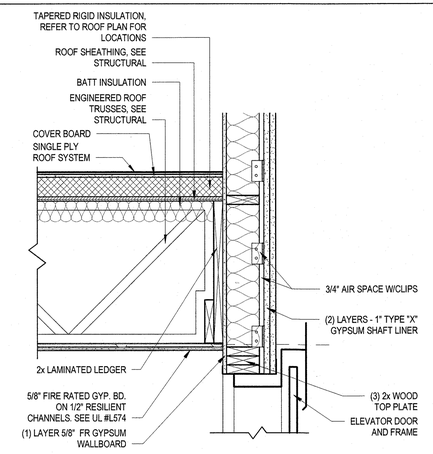

E6 ELEVATOR SHAFT / WALL SECTION
1" = 1'-0"

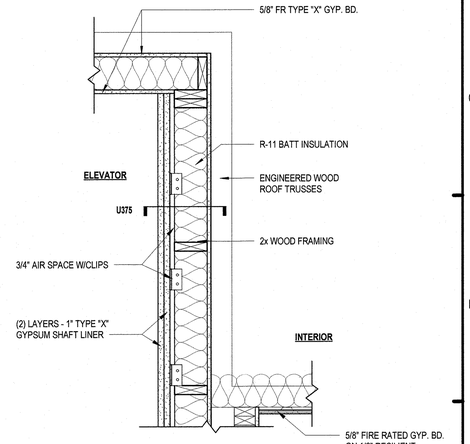

E8 ELEVATOR SHAFT / WALL SECTION
1" = 1'-0"

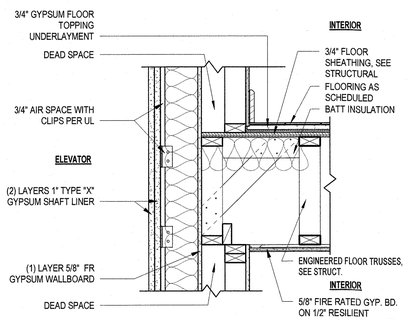

G1 ELEVATOR SHAFT / WALL SECTION
1" = 1'-0"

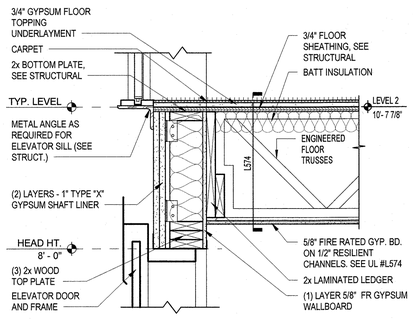

G3 WALL SECTION / BLDG. TYPE 2
1" = 1'-0"

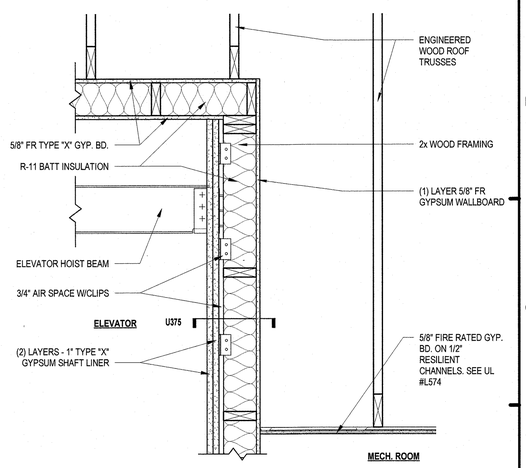

LAKE COUNTY BUILDING SERVICES
Any errors or omissions in these plans shall be made to conform with the applicable code requirements per Florida Building Code, in accordance with Section 107. Plans were reviewed for code compliance and shall be kept on job site.

RECEIVED FEB 14 2019

H8 ELEVATOR SHAFT / WALL SECTION
1" = 1'-0"

PERMIT REVIEW STAMP

ISSUE HISTORY

No.	Date	Description
1	02/08/2019	ISSUE FOR PERMIT

REVISION HISTORY

No.	Date	Description

© 2017 These documents and their contents are the property of Fugleberg Koch and may not be reproduced, published or used in any way without the permission of Fugleberg Koch. Any unauthorized use, reproduction or distribution of these documents or their contents is strictly prohibited.

FUGLEBERG KOCH
2555 Temple Trail, Winter Park, FL 32789 (407) 629-0595
www.fuglebergkoch.com AA26002103
CONSULTANT

JACQUELYN E. GOVE
FLORIDA LICENSE AR94111
STATE OF FLORIDA
MICHAEL E. GOVE
AR94111
REGISTERED ARCHITECT
02/08/2019

SUMMER BAY APTS. II
LAKE COUNTY, FL

Drawn:	Author
Checked:	Checker
Approval:	Approver
Date:	Issue Date
Project #:	5389

ELEVATOR DETAILS

A2.49

PLOTTED: 2/11/2019 2:33:14 PM

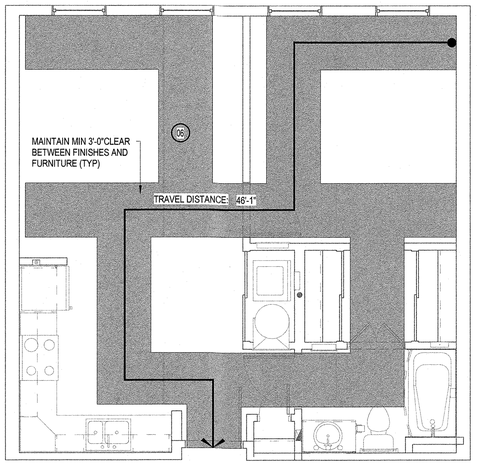

D1 UNIT S1 - ACCESSIBLE ROUTE PLAN
1/4" = 1'-0"

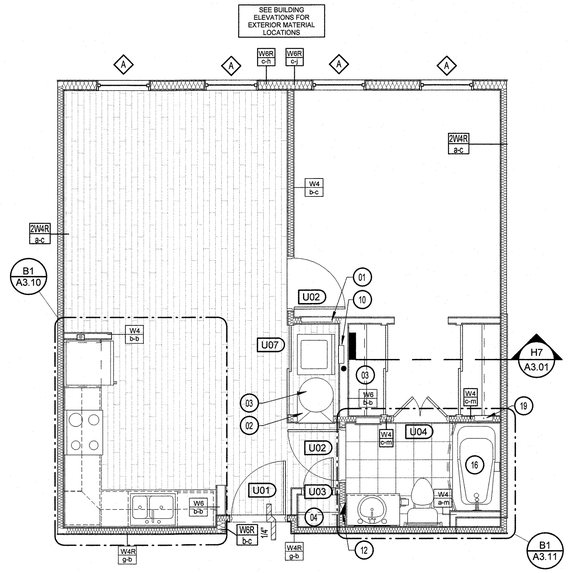

D4 UNIT S1 - REFERENCE PLAN
1/4" = 1'-0"

Area Schedule- UNIT S1

Name	Area	Bedrooms	Baths	Den
UNIT S1	618 SF	1	1	
	618 SF			

KEY NOTES:

1. ELECTRICAL PANEL. REFER TO ELECTRICAL DRAWINGS.
2. HVAC UNIT. SEE MECHANICAL DRAWINGS.
3. WIRE SHELF & POLE @ 6'-0".
4. WIRE SHELF @ 3'-0", 5'-0", & 6'-0" AFF.
5. SHELF ABOVE WASHER @ 5'-8" AFF.
6. MAINTAIN MIN. 3-0" CLEAR BETWEEN FINISHES AND FURNITURE TYP.
7. CENTER LIGHTING FIXTURE ABOVE LAVATORY.
8. WASHER BOX.
9. DRYER VENT.
10. COMBO WASHER / DRYER BOX.
11. MOVABLE KITCHEN ISLAND.
12. PROVIDE FAN RATED REINFORCED J-BOX.
13. ATTIC ACCESS, TOP FLOOR UNITS ONLY.
14. WATER HEATER, SEE PLUMBING DRAWINGS.
15. ACCESS PANEL FOR MECH. UNIT.
16. FIBERGLASS TUB W/ TILE SURROUND.
17. GLASS SHOWER ENCLOSURE W/ TILE WALLS AND ACYRLIC PRE-FABRICATED PAN.
18. FRAMELESS MIRROR.
19. CABLE / COMM. CABINET - SEE ELECT.

RCP LEGEND

NOTE: RCP DIMS ARE FROM FINISH FACE OF WALL

- EXIT LIGHT
- LED LIGHT W/ ROUND BOX
- CEILING MOUNTED LIGHT
- EXTERIOR CEILING MOUNTED LIGHT
- PENDANT LIGHT
- SPRINKLER HEAD - CEILING MOUNTED
- SPRINKLER HEAD - SIDEWALL
- EMERGENCY LIGHT - SIDEWALL
- FLORESCENT STRIP LIGHT
- CEILING FAN
- FIXTURE VANITY LIGHT - WALL MOUNTED
- EXTERIOR LIGHT - WALL MOUNTED
- EXHAUST FAN - CEILING MOUNTED
- SQUARE SUPPLY DIFFUSER - CEILING MOUNTED
- SQUARE RETURN DIFFUSER - CEILING MOUNTED
- SUPPLY DIFFUSER - WALL MOUNTED
- EXHAUST FAN - WALL MOUNTED
- THRU-WALL GRILL
- ATTIC ACCESS PANEL
- 5/8" FR.GYP BD CEILING ON RESILIENT CHANNEL - 9'-0" AFF U.N.O.

GENERAL NOTES:

- ALL DIMENSIONS ARE FROM OUTSIDE FACE OF STUD UNLESS NOTED OTHERWISE.
- CONTRACTOR TO FIELD VERIFY ALL DIMENSIONS. NOTIFY ARCHITECT OF ANY DISCREPANCIES.
- EXTERIOR WALL SHOWN FOR REFERENCE ONLY. REFER TO BUILDING PLANS FOR EXTERIOR WALL TYPES, WINDOWS AND LOCATIONS.
- ALL PLUMBING WALLS NEED TO BE COORDINATED WITH PLUMBER TO DETERMINE 2x4 OR 2x6 CONSTRUCTION.
- PROVIDE ONE 2-A:10-B:C 5 lb FIRE EXTINGUISHER PER UNIT. LOCATE PER FIRE DEPARTMENT REQUIREMENTS.
- PROVIDE ACOUSTICAL UNDERLAYMENT UNDERNEATH GYPSUM TOPPING AT ALL TILE / VYNIL FLOOR LOCATIONS ON ELEVATED FLOORS. REFER TO SPECIFICATIONS FOR APPROVED PRODUCT.
- COORDINATE FINISHES WITH INTERIOR DESIGN DOCUMENTS.
- UNIT PLANS SHOWN ARE TYPICAL - SEE BUILING PLANS FOR UNIT ORIENTATION - PLANS MAY NEED TO BE REVERSED - ADJUST DIMENSION LAYOUTS ACCORDINGLY.
- SEE LIFE SAFETY PLAN SHEETS FOR RATED WALL LOCATIONS.
- REFER TO ENLARGED KITCHEN AND BATH PLANS FOR FHA CLEARANCES.
- BALCONY GUARDRAILS 36"h @ 1stFLOOR BALCONIES, 42"h @ ALL LEVELS ABOVE 1st FLOOR. RETURN AND ANCHOR ALL RAILS TO WALL.
- PROVIDE FIRE RATED ICE MAKER BOXES, WASHER BOXES AND DRYER BOXES WHEN LOCATED WITHIN A RATED WALL.

PERMIT REVIEW STAMP

ISSUE HISTORY

No.	Date	Description
1	02/08/2019	ISSUE FOR PERMIT

REVISION HISTORY

No.	Date	Description

© 2017 These documents and the concepts contained herein are the property of FUGLEBERG KOCH ARCHITECTS, INC. and are issued only for the specific project named on these drawings. Any reproduction, alteration, or modification of these documents without the expressed written consent of Fuglegerg Koch, is prohibited by law.

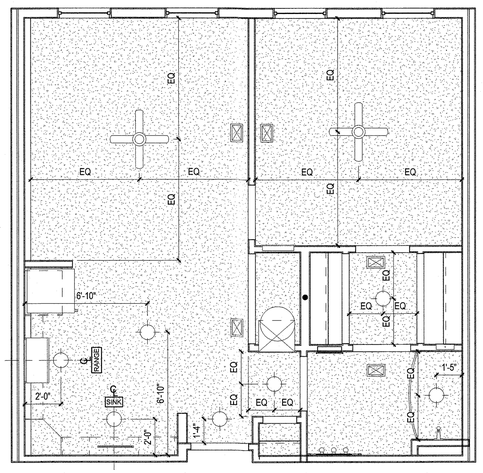

H1 UNIT S1 - RCP
1/4" = 1'-0"

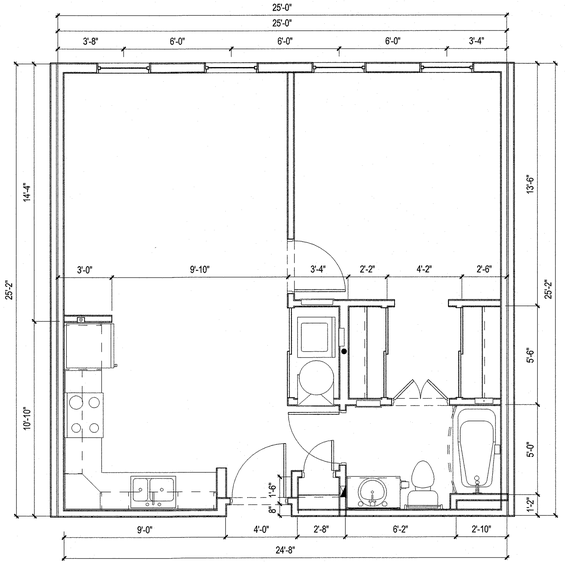

H4 UNIT S1 - DIMENSION PLAN
1/4" = 1'-0"

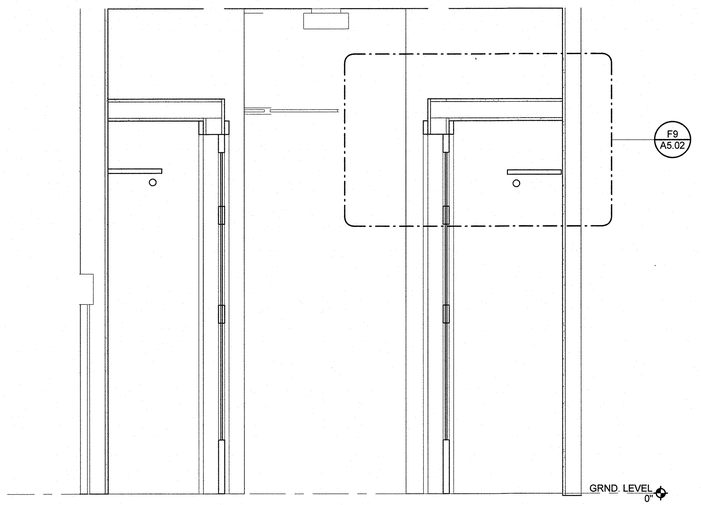

H7 CLOSET SECTION
3/4" = 1'-0"

LAKE COUNTY BUILDING SERVICES
Any errors or omissions in these plans shall be made to conform with the applicable code requirements per Florida Building Code, in accordance with Section 107. Plans were reviewed for code compliance and shall be kept on job site.

RECEIVED FEB 14 2019

FUGLEBERG KOCH
2555 Temple Trail, Winter Park, FL 32789 (407) 629-0595
www.fuglebergkoch.com AA26002103
CONSULTANT

ARCHIBALD E. GOVE
FLORIDA LICENSE AR94111
STATE OF FLORIDA
MICHAEL E. GOVE
AR94111
REGISTERED ARCHITECT
02/08/2019

SUMMER BAY APTS. II	Drawn: Author
LAKE COUNTY, FL	Checked: Checker
	Approval: Approver
	Date: Issue Date
	Project #: 5389
STUDIO UNIT - S1	
A3.01	

PLOTTED: 2/11/2019 2:33:29 PM

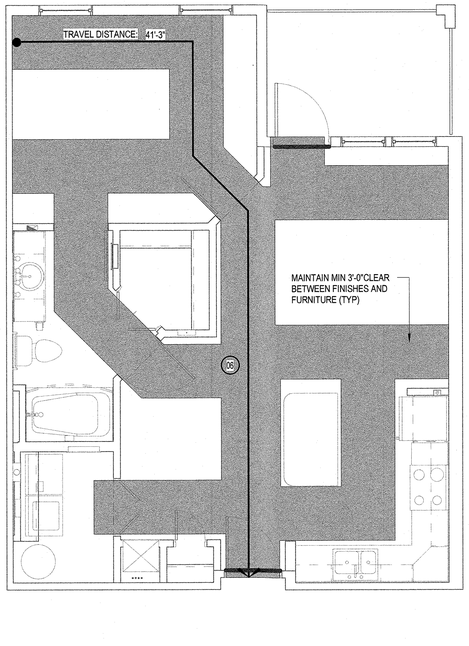

D1 UNIT A1 - ACCESSIBLE ROUTE PLAN
1/4" = 1'-0"

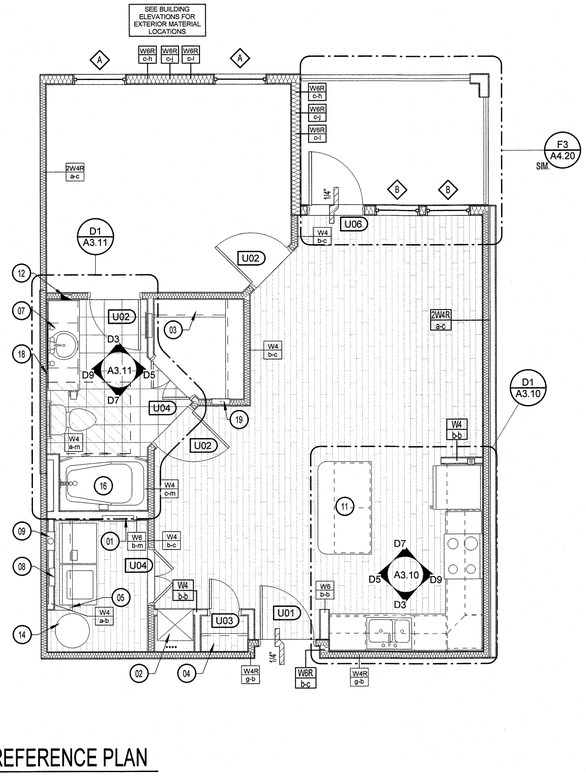

D5 UNIT A1 - REFERENCE PLAN
1/4" = 1'-0"

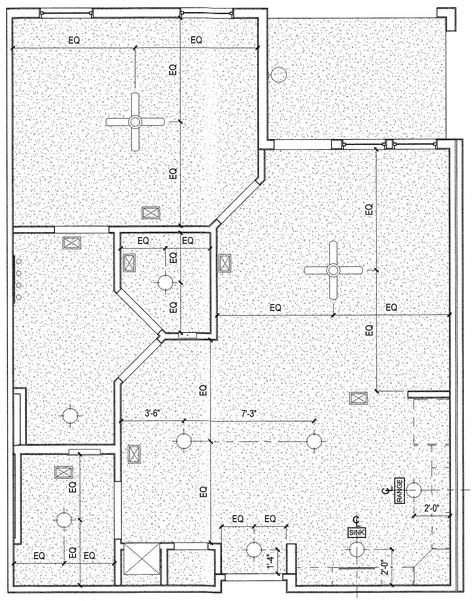

H1 UNIT A1 - RCP
1/4" = 1'-0"

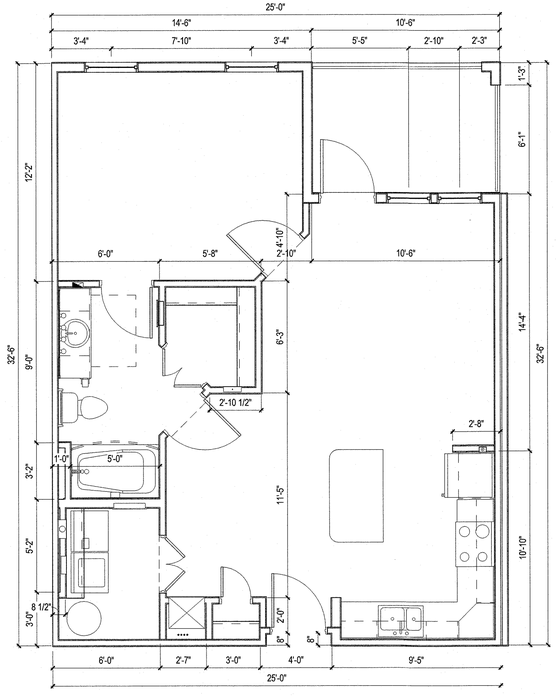

H5 UNIT A1 - DIMENSION PLAN
1/4" = 1'-0"

KEY NOTES:

1. ELECTRICAL PANEL. REFER TO ELECTRICAL DRAWINGS.
2. HVAC UNIT. SEE MECHANICAL DRAWINGS.
3. WIRE SHELF & POLE @ 6'-0".
4. WIRE SHELF @ 3'-0", 5'-0", & 6'-0" AFF.
5. SHELF ABOVE WASHER @ 5'-8" AFF.
6. MAINTAIN MIN. 3'-0" CLEAR BETWEEN FINISHES AND FURNITURE TYP.
7. CENTER LIGHTING FIXTURE ABOVE LAVATORY.
8. WASHER BOX.
9. DRYER VENT.
10. COMBO WASHER / DRYER BOX.
11. MOVABLE KITCHEN ISLAND.
12. PROVIDE FAN RATED REINFORCED J-BOX.
13. ATTIC ACCESS, TOP FLOOR UNITS ONLY.
14. WATER HEATER, SEE PLUMBING DRAWINGS.
15. ACCESS PANEL FOR MECH. UNIT.
16. FIBERGLASS TUB W/ TILE SURROUND.
17. GLASS SHOWER ENCLOSURE W/ TILE WALLS AND ACYRLIC PRE-FABRICATED PAN.
18. FRAMELESS MIRROR.
19. CABLE / COMM. CABINET - SEE ELECT.

RCP LEGEND

NOTE: RCP DIMS ARE FROM FINISH FACE OF WALL

- EXIT LIGHT
- LED LIGHT W/ ROUND BOX
- CEILING MOUNTED LIGHT
- E — EXTERIOR CEILING MOUNTED LIGHT
- PENDANT LIGHT
- SPRINKLER HEAD - CEILING MOUNTED
- SPRINKLER HEAD - SIDEWALL
- EMERGENCY LIGHT - SIDEWALL
- FLORESCENT STRIP LIGHT
- CEILING FAN
- FIXTURE VANITY LIGHT - WALL MOUNTED
- EXTERIOR LIGHT - WALL MOUNTED
- EXHAUST FAN - CEILING MOUNTED
- SQUARE SUPPLY DIFFUSER - CEILING MOUNTED
- SQUARE RETURN DIFFUSER - CEILING MOUNTED
- SUPPLY DIFFUSER - WALL MOUNTED
- EXHAUST FAN - WALL MOUNTED
- THRU-WALL GRILL
- ATTIC ACCESS PANEL
- 5/8" FR GYP BD CEILING ON RESILIENT CHANNEL - 9'-0" AFF U.N.O.

LAKE COUNTY BUILDING SERVICES
Any errors or omissions in these plans shall be made to conform with the applicable code requirements per Florida Building Code, in accordance with Section 107. Plans were reviewed for code compliance and shall be kept on job site.

RECEIVED FEB 14 2019

Area Schedule- UNIT A1

Name	Area	Bedrooms	Baths	Den
BALCONY	77 SF	0	0	
UNIT A1	733 SF	1	1	
	810 SF			

GENERAL NOTES:

- ALL DIMENSIONS ARE FROM OUTSIDE FACE OF STUD UNLESS NOTED OTHERWISE.
- CONTRACTOR TO FIELD VERIFY ALL DIMENSIONS. NOTIFY ARCHITECT OF ANY DISCREPANCIES.
- EXTERIOR WALL SHOWN FOR REFERENCE ONLY. REFER TO BUILDING PLANS FOR EXTERIOR WALL TYPES, WINDOWS AND LOCATIONS.
- ALL PLUMBING WALLS NEED TO BE COORDINATED WITH PLUMBER TO DETERMINE 2x4 OR 2x6 CONSTRUCTION.
- PROVIDE ONE 2-A:10-B:C 5 lb FIRE EXTINGUISHER PER UNIT. LOCATE PER FIRE DEPARTMENT REQUIREMENTS.
- PROVIDE ACOUSTICAL UNDERLAYMENT UNDERNEATH GYPSUM TOPPING AT ALL TILE / VYNIL FLOOR LOCATIONS ON ELEVATED FLOORS. REFER TO SPECIFICATIONS FOR APPROVED PRODUCT.
- COORDINATE FINISHES WITH INTERIOR DESIGN DOCUMENTS.
- UNIT PLANS SHOWN ARE TYPICAL - SEE BUILING PLANS FOR UNIT ORIENTATION - PLANS MAY NEED TO BE REVERSED - ADJUST DIMENSION LAYOUTS ACCORDINGLY.
- SEE LIFE SAFETY PLAN SHEETS FOR RATED WALL LOCATIONS.
- REFER TO ENLARGED KITCHEN AND BATH PLANS FOR FHA CLEARANCES.
- BALCONY GUARDRAILS 36"h @ 1ST FLOOR BALCONIES, 42"h @ ALL LEVELS ABOVE 1ST FLOOR. RETURN AND ANCHOR ALL RAILS TO WALL.
- PROVIDE FIRE RATED ICE MAKER BOXES, WASHER BOXES AND DRYER BOXES WHEN LOCATED WITHIN A RATED WALL.

PERMIT REVIEW STAMP

ISSUE HISTORY

No.	Date	Description
1	02/08/2019	ISSUE FOR PERMIT

REVISION HISTORY

No.	Date	Description

© 2017 These documents and their contents are the property of FUGLEBERG KOCH - AA0002103, and are issued only for the specific project noted on these drawings. Any reproduction, reuse, or modifications of these documents without the expressed written consent of Fugleberg Koch, is prohibited by law.

FUGLEBERG KOCH
2555 Temple Trail, Winter Park, FL 32789 (407) 629-0595
www.fuglebergkoch.com AA26002103
CONSULTANT

MICHAEL E. GOVE
FLORIDA LICENSE # AR94111
STATE OF FLORIDA
MICHAEL E. GOVE
AR94111
REGISTERED ARCHITECT
2/08/2019

SUMMER BAY APTS. II	Drawn: Author
LAKE COUNTY, FL	Checked: Checker
	Approval: Approver
	Date: Issue Date
	Project #: 5389
1 BR UNIT PLANS - A1	
A3.02	

PLOTTED: 2/11/2019 2:53:39 PM

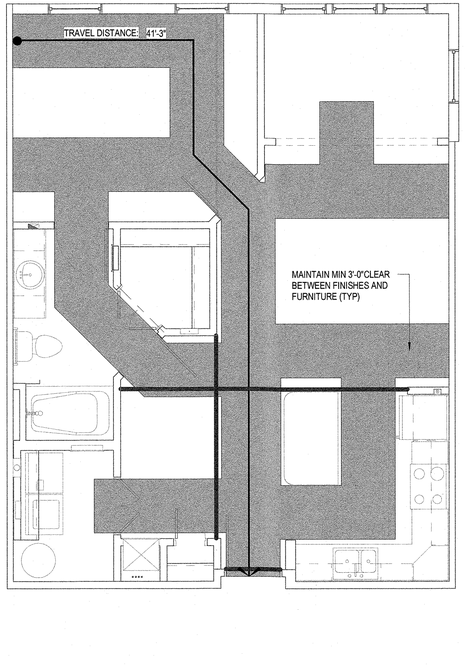

D1 UNIT A1S - ACCESSIBLE ROUTE PLAN
1/4" = 1'-0"

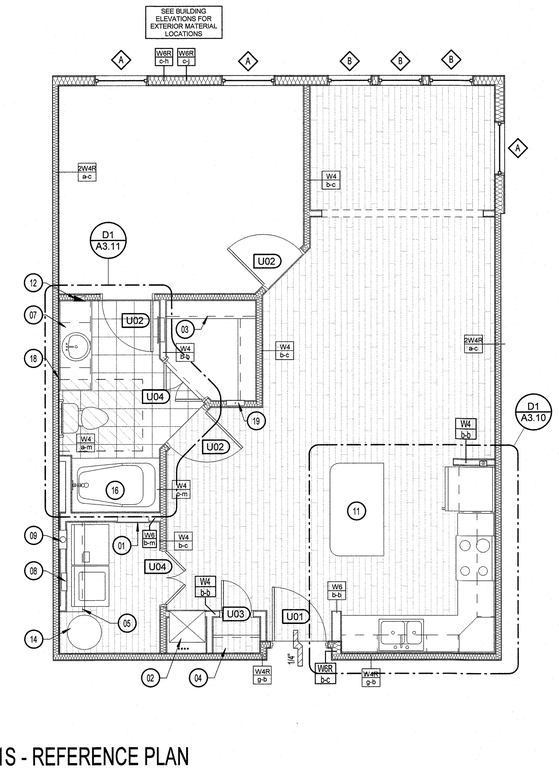

D5 UNIT A1S - REFERENCE PLAN
1/4" = 1'-0"

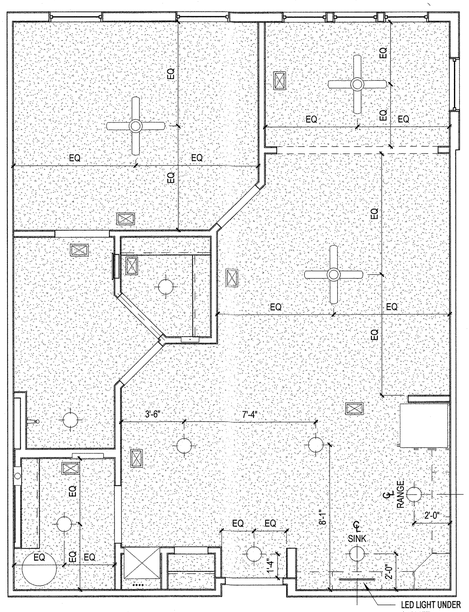

H1 UNIT A1S - RCP
1/4" = 1'-0"

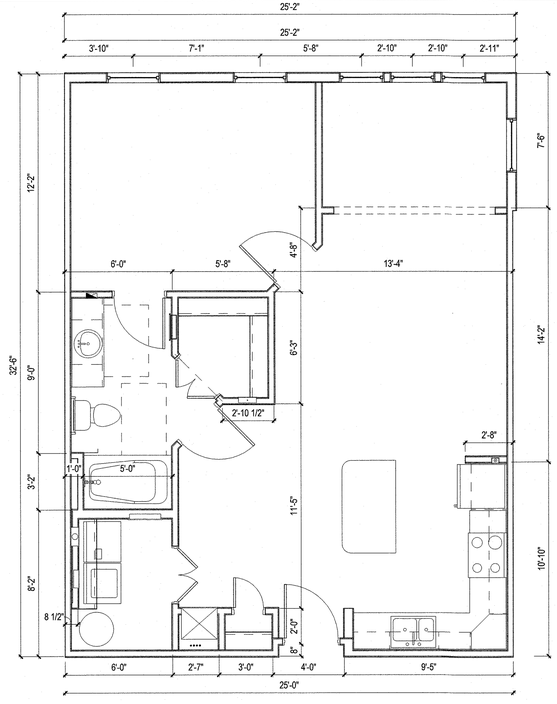

H5 UNIT A1S - DIMENSION PLAN
1/4" = 1'-0"

KEY NOTES:

1. ELECTRICAL PANEL. REFER TO ELECTRICAL DRAWINGS.
2. HVAC UNIT. SEE MECHANICAL DRAWINGS.
3. WIRE SHELF & POLE @ 6'-0".
4. WIRE SHELF @ 3'-0", 5'-0", & 8'-0" AFF.
5. SHELF ABOVE WASHER @ 5'-6" AFF.
6. MAINTAIN MIN. 3-0" CLEAR BETWEEN FINISHES AND FURNITURE TYP.
7. CENTER LIGHTING FIXTURE ABOVE LAVATORY.
8. WASHER BOX.
9. DRYER VENT.
10. COMBO WASHER / DRYER BOX.
11. MOVABLE KITCHEN ISLAND.
12. PROVIDE FAN RATED REINFORCED J-BOX.
13. ATTIC ACCESS, TOP FLOOR UNITS ONLY.
14. WATER HEATER, SEE PLUMBING DRAWINGS.
15. ACCESS PANEL FOR MECH. UNIT.
16. FIBERGLASS TUB W/ TILE SURROUND.
17. GLASS SHOWER ENCLOSURE W/ TILE WALLS AND ACYRLIC PRE-FABRICATED PAN.
18. FRAMELESS MIRROR.
19. CABLE / COMM. CABINET - SEE ELECT.

RCP LEGEND

NOTE: RCP DIMS ARE FROM FINISH FACE OF WALL

- EXIT LIGHT
- LED LIGHT W/ ROUND BOX
- CEILING MOUNTED LIGHT
- E — EXTERIOR CEILING MOUNTED LIGHT
- PENDANT LIGHT
- SPRINKLER HEAD - CEILING MOUNTED
- SPRINKLER HEAD - SIDEWALL
- EMERGENCY LIGHT - SIDEWALL
- FLORESCENT STRIP LIGHT
- CEILING FAN
- FIXTURE VANITY LIGHT - WALL MOUNTED
- EXTERIOR LIGHT - WALL MOUNTED
- EXHAUST FAN - CEILING MOUNTED
- SQUARE SUPPLY DIFFUSER - CEILING MOUNTED
- SQUARE RETURN DIFFUSER - CEILING MOUNTED
- SUPPLY DIFFUSER - WALL MOUNTED
- EXHAUST FAN - WALL MOUNTED
- THRU-WALL GRILL
- ATTIC ACCESS PANEL
- 5/8" FR GYP BD CEILING ON RESILIENT CHANNEL - 9'-0" AFF U.N.O.

LAKE COUNTY BUILDING SERVICES
Any errors or omissions in these plans shall be made to conform with the applicable code requirements per Florida Building Code, in accordance with Section 107. Plans were reviewed for code compliance and shall be kept on job site.

RECEIVED FEB 14 2019

Area Schedule- UNIT A1S

Name	Area	Bedrooms	Baths	Den
UNIT A2	810 SF	1	1	
	810 SF			

GENERAL NOTES:

- ALL DIMENSIONS ARE FROM OUTSIDE FACE OF STUD UNLESS NOTED OTHERWISE.
- CONTRACTOR TO FIELD VERIFY ALL DIMENSIONS. NOTIFY ARCHITECT OF ANY DISCREPANCIES.
- EXTERIOR WALL SHOWN FOR REFERENCE ONLY. REFER TO BUILDING PLANS FOR EXTERIOR WALL TYPES, WINDOWS AND LOCATIONS.
- ALL PLUMBING WALLS NEED TO BE COORDINATED WITH PLUMBER TO DETERMINE 2x4 OR 2x6 CONSTRUCTION.
- PROVIDE ONE 2-A:10-B:C 5 lb FIRE EXTINGUISHER PER UNIT. LOCATE PER FIRE DEPARTMENT REQUIREMENTS.
- PROVIDE ACOUSTICAL UNDERLAYMENT UNDERNEATH GYPSUM TOPPING AT ALL TILE / VYNIL FLOOR LOCATIONS ON ELEVATED FLOORS. REFER TO SPECIFICATIONS FOR APPROVED PRODUCT.
- COORDINATE FINISHES WITH INTERIOR DESIGN DOCUMENTS.
- UNIT PLANS SHOWN ARE TYPICAL - SEE BUILING PLANS FOR UNIT ORIENTATION - PLANS MAY NEED TO BE REVERSED - ADJUST DIMENSION LAYOUTS ACCORDINGLY
- SEE LIFE SAFETY PLAN SHEETS FOR RATED WALL LOCATIONS.
- REFER TO ENLARGED KITCHEN AND BATH PLANS FOR FHA CLEARANCES.
- BALCONY GUARDRAILS 36"h @ 1ST FLOOR BALCONIES, 42"h @ ALL LEVELS ABOVE 1st FLOOR. RETURN AND ANCHOR ALL RAILS TO WALL.
- PROVIDE FIRE RATED ICE MAKER BOXES, WASHER BOXES AND DRYER BOXES WHEN LOCATED WITHIN A RATED WALL.

PERMIT REVIEW STAMP

ISSUE HISTORY

No.	Date	Description
1	02/08/2019	ISSUE FOR PERMIT

REVISION HISTORY

No.	Date	Description

© 2017 These documents and their contents are the property of FUGLEBERG KOCH - AA26002103, and are issued only for the specific project noted on these drawings. Any reproductions, revisions, or modifications of these documents without the expressed written consent of Fugleberg Koch, is prohibited by law.

FUGLEBERG KOCH
2555 Temple Trail, Winter Park, FL 32789 (407) 629-0595
www.fuglebergkoch.com AA26002103
CONSULTANT

MICHAEL E. GOVE
LICENSE # FLORIDA AR94111
STATE OF FLORIDA
MICHAEL E. GOVE
AR94111
REGISTERED ARCHITECT
02/08/2019

SUMMER BAY APTS. II	Drawn: Author
LAKE COUNTY, FL	Checked: Checker
	Approval: Approver
	Date: Issue Date
	Project #: 5389
1 BR UNIT PLANS - A1S	
A3.03	

PLOTTED: 2/11/2019 2:33:48 PM

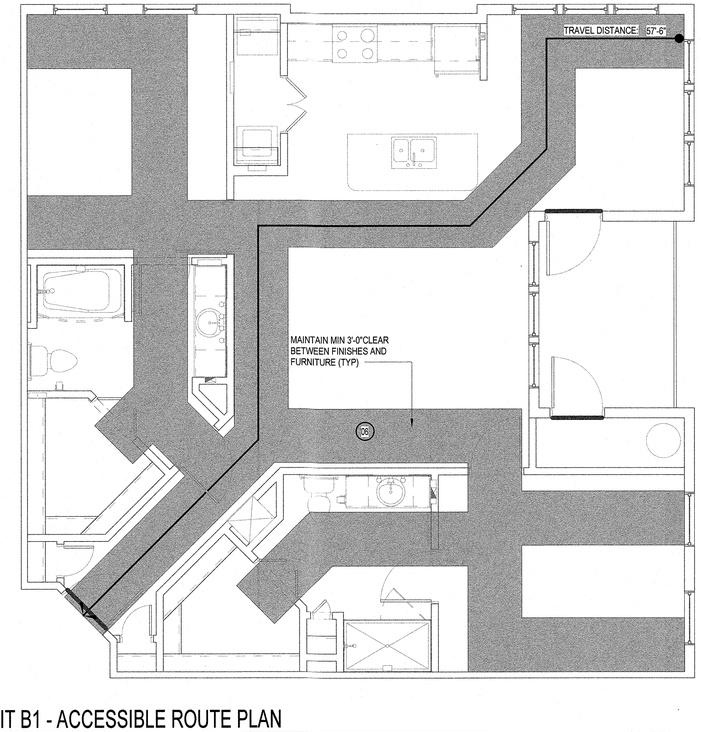

D1 UNIT B1 - ACCESSIBLE ROUTE PLAN
1/4" = 1'-0"

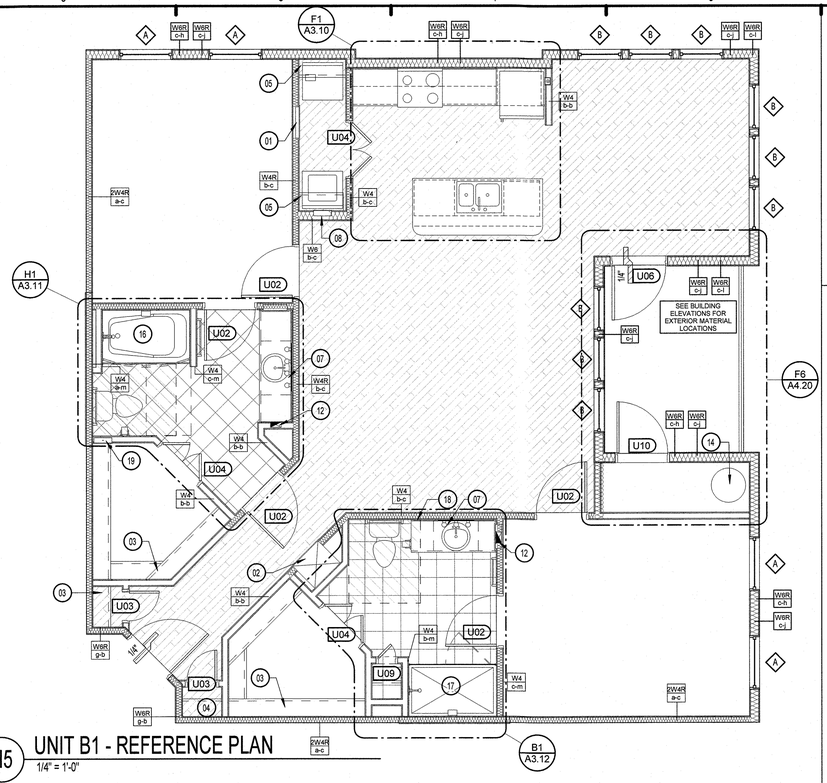

H5 UNIT B1 - REFERENCE PLAN
1/4" = 1'-0"

KEY NOTES:

1. ELECTRICAL PANEL. REFER TO ELECTRICAL DRAWINGS.
2. HVAC UNIT. SEE MECHANICAL DRAWINGS.
3. WIRE SHELF & POLE @ 6'-0".
4. WIRE SHELF @ 3'-0", 5'-0", & 6'-0" AFF.
5. SHELF ABOVE WASHER @ 5'-6" AFF.
6. MAINTAIN MIN. 3'-0" CLEAR BETWEEN FINISHES AND FURNITURE TYP.
7. CENTER LIGHTING FIXTURE ABOVE LAVATORY.
8. WASHER BOX.
9. DRYER VENT.
10. COMBO WASHER / DRYER BOX.
11. MOVABLE KITCHEN ISLAND.
12. PROVIDE FAN RATED REINFORCED J-BOX.
13. ATTIC ACCESS, TOP FLOOR UNITS ONLY.
14. WATER HEATER, SEE PLUMBING DRAWINGS.
15. ACCESS PANEL FOR MECH. UNIT.
16. FIBERGLASS TUB W/ TILE SURROUND.
17. GLASS SHOWER ENCLOSURE W/ TILE WALLS AND ACYRLIC PRE-FABRICATED PAN.
18. FRAMELESS MIRROR.
19. CABLE / COMM. CABINET - SEE ELECT.

RCP LEGEND

NOTE: RCP DIMS ARE FROM FINISH FACE OF WALL

- EXIT LIGHT
- LED LIGHT W/ ROUND BOX
- CEILING MOUNTED LIGHT
- EXTERIOR CEILING MOUNTED LIGHT
- PENDANT LIGHT
- SPRINKLER HEAD - CEILING MOUNTED
- SPRINKLER HEAD - SIDEWALL
- EMERGENCY LIGHT - SIDEWALL
- FLORESCENT STRIP LIGHT
- CEILING FAN
- FIXTURE VANITY LIGHT - WALL MOUNTED
- EXTERIOR LIGHT - WALL MOUNTED
- EXHAUST FAN - CEILING MOUNTED
- SQUARE SUPPLY DIFFUSER - CEILING MOUNTED
- SQUARE RETURN DIFFUSER - CEILING MOUNTED
- SUPPLY DIFFUSER - WALL MOUNTED
- EXHAUST FAN - WALL MOUNTED
- THRU-WALL GRILL
- ATTIC ACCESS PANEL
- 5/8" FR GYP BD CEILING ON RESILIENT CHANNEL - 9'-0" AFF U.N.O.

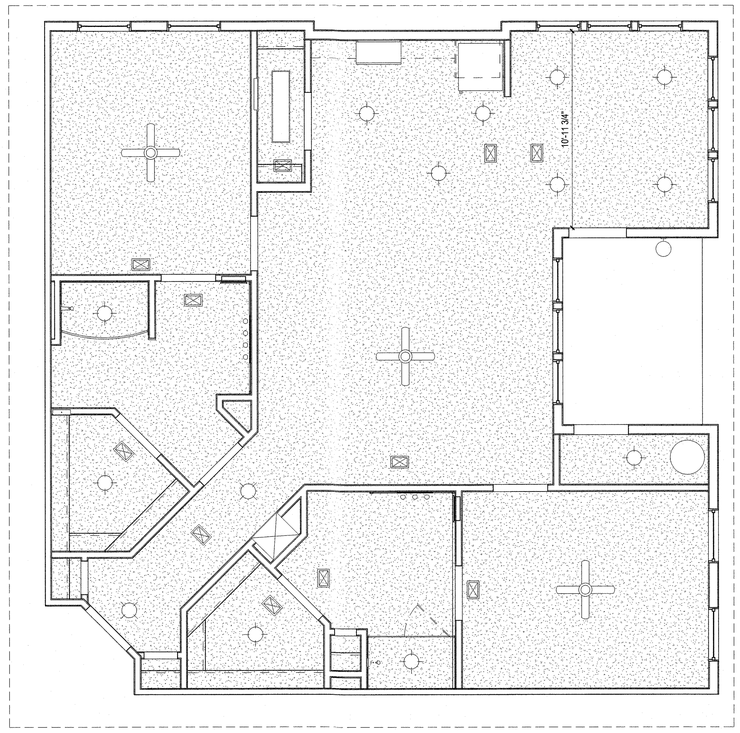

D5 UNIT B1 - RCP
1/4" = 1'-0"

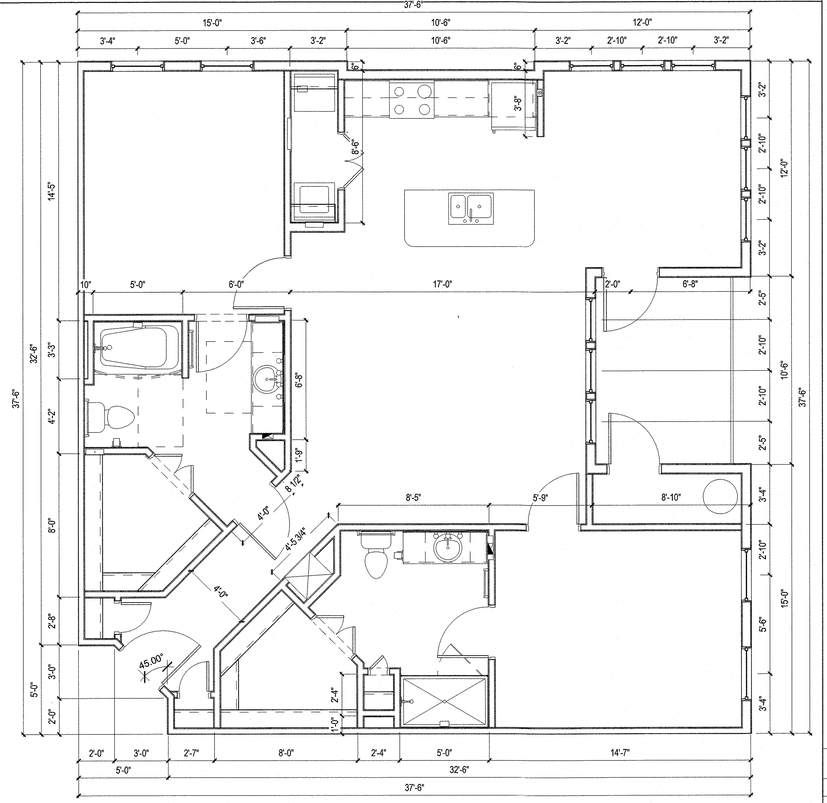

H1 UNIT B1 - DIMENSION PLAN
1/4" = 1'-0"

Area Schedule- UNIT B1

Name	Area	Bedrooms	Baths	Den
BALCONY	91 SF	0	0	
UNIT B1	1295 SF	2	2	
	1386 SF			

GENERAL NOTES:

- ALL DIMENSIONS ARE FROM OUTSIDE FACE OF STUD UNLESS NOTED OTHERWISE.
- CONTRACTOR TO FIELD VERIFY ALL DIMENSIONS. NOTIFY ARCHITECT OF ANY DISCREPANCIES.
- EXTERIOR WALL SHOWN FOR REFERENCE ONLY. REFER TO BUILDING PLANS FOR EXTERIOR WALL TYPES, WINDOWS AND LOCATIONS.
- ALL PLUMBING WALLS NEED TO BE COORDINATED WITH PLUMBER TO DETERMINE 2x4 OR 2x6 CONSTRUCTION.
- PROVIDE ONE 2-A:10-B:C 5 lb FIRE EXTINGUISHER PER UNIT. LOCATE PER FIRE DEPARTMENT REQUIREMENTS.
- PROVIDE ACOUSTICAL UNDERLAYMENT UNDERNEATH GYPSUM TOPPING AT ALL TILE / VYNIL FLOOR LOCATIONS ON ELEVATED FLOORS. REFER TO SPECIFICATIONS FOR APPROVED PRODUCT.
- COORDINATE FINISHES WITH INTERIOR DESIGN DOCUMENTS.
- UNIT PLANS SHOWN ARE TYPICAL - SEE BUILING PLANS FOR UNIT ORIENTATION - PLANS MAY NEED TO BE REVERSED - ADJUST DIMENSION LAYOUTS ACCORDINGLY.
- SEE LIFE SAFETY PLAN SHEETS FOR RATED WALL LOCATIONS.
- REFER TO ENLARGED KITCHEN AND BATH PLANS FOR FHA CLEARANCES.
- BALCONY GUARDRAILS 36"h @ 1ST FLOOR BALCONIES, 42"h @ ALL LEVELS ABOVE 1ST FLOOR. RETURN AND ANCHOR ALL RAILS TO WALL.
- PROVIDE FIRE RATED ICE MAKER BOXES, WASHER BOXES AND DRYER BOXES WHEN LOCATED WITHIN A RATED WALL.

LAKE COUNTY BUILDING SERVICES
Any errors or omissions in these plans shall be made to conform with the applicable code requirements per Florida Building Code, in accordance with Section 107. Plans were reviewed for code compliance and shall be kept on job site.

RECEIVED FEB 14 2019

PERMIT REVIEW STAMP

ISSUE HISTORY

No.	Date	Description
1	02/08/2019	ISSUE FOR PERMIT

REVISION HISTORY

No.	Date	Description

© 2017 These documents and their contents are the property of FUGLEBERG KOCH - AA26002103, and are issued only for the specific project listed on these drawings. Any reproduction, revision, or modifications of these documents without the expressed written consent of Fugleberg Koch, is prohibited by law.

FUGLEBERG KOCH
2555 Temple Trail, Winter Park, FL 32789 (407) 629-0595
www.fuglebergkoch.com AA26002103
CONSULTANT

LICENSED ARCHITECT STATE OF FLORIDA AR94111 MICHAEL E. GOVE REGISTERED ARCHITECT 02/08/2019

Drawn:	Author
Checked:	Checker
Approval:	Approver
Date:	Issue Date
Project #:	5389

SUMMER BAY APTS. II
LAKE COUNTY, FL

2 BR UNIT PLANS - B1

A3.04

PLOTTED: 2/11/2019 2:33:59 PM

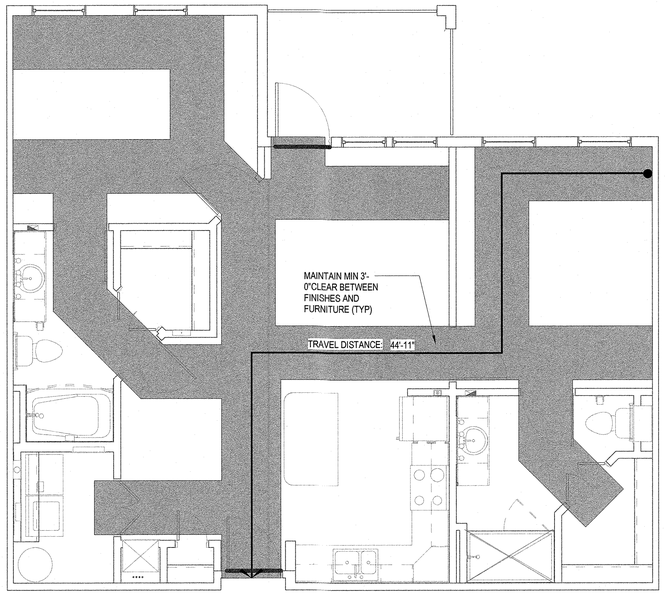

D1 UNIT B2 - ACCESSIBLE ROUTE PLAN
1/4" = 1'-0"

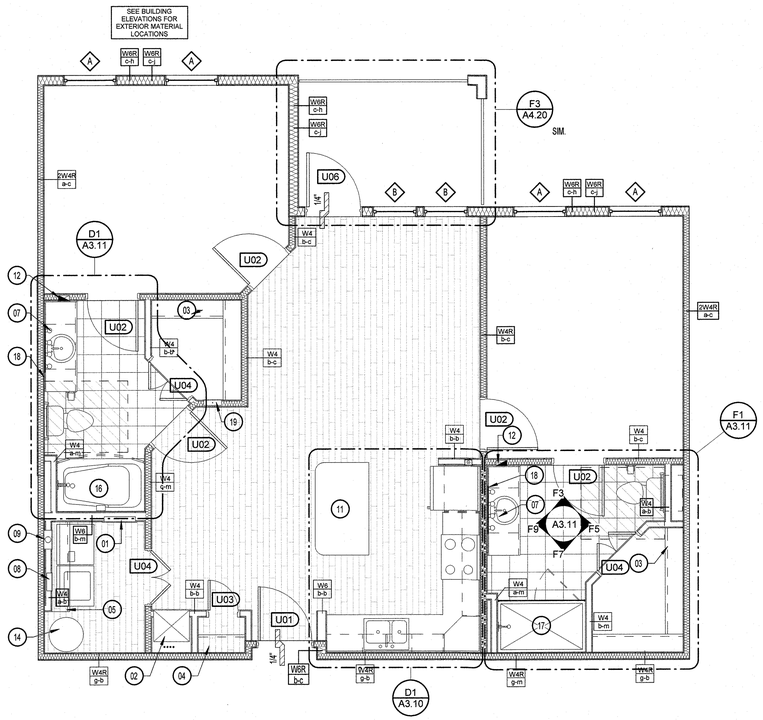

H5 UNIT B2 - REFERENCE PLAN
1/4" = 1'-0"

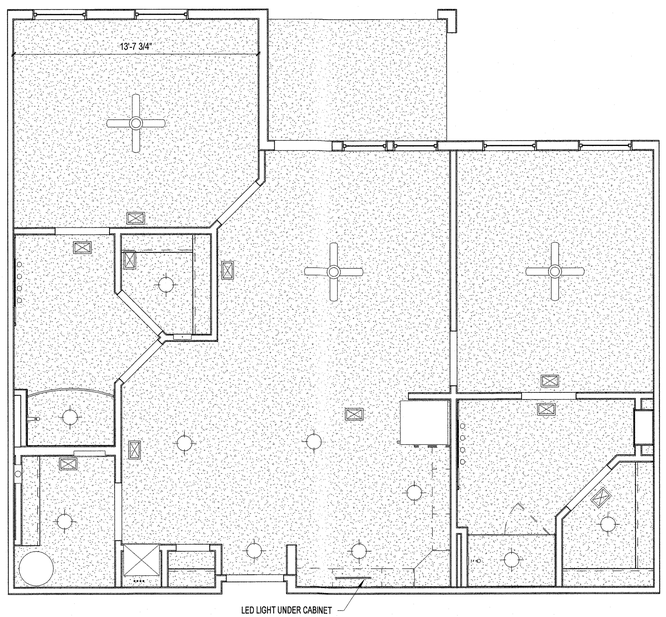

D5 UNIT B2 - RCP
1/4" = 1'-0"

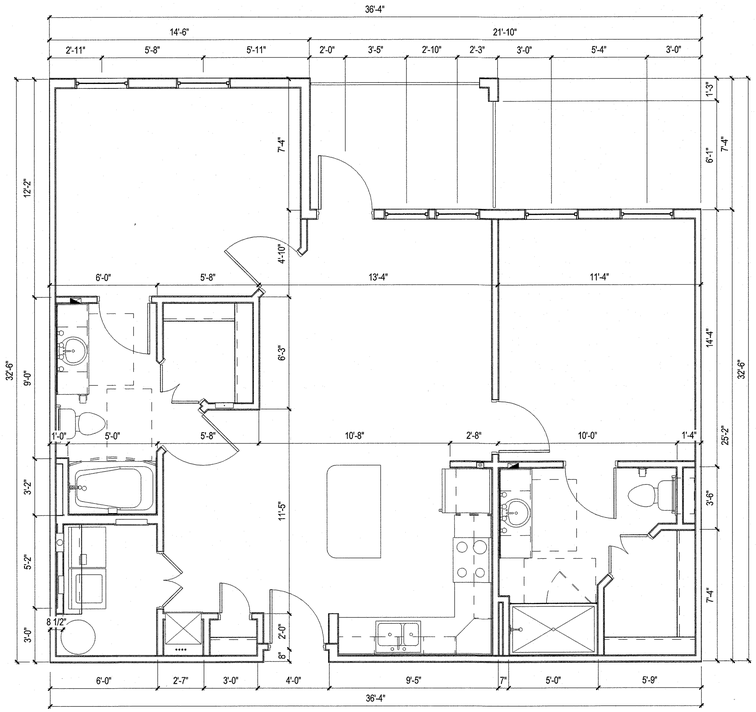

H1 UNIT B2 - DIMENSION PLAN
1/4" = 1'-0"

KEY NOTES:

1. ELECTRICAL PANEL. REFER TO ELECTRICAL DRAWINGS.
2. HVAC UNIT. SEE MECHANICAL DRAWINGS.
3. WIRE SHELF & POLE @ 6'-0".
4. WIRE SHELF @ 3'-0", 5'-0", & 6'-0" AFF.
5. SHELF ABOVE WASHER @ 6'-8" AFF.
6. MAINTAIN MIN. 3-0" CLEAR BETWEEN FINISHES AND FURNITURE TYP.
7. CENTER LIGHTING FIXTURE ABOVE LAVATORY.
8. WASHER BOX.
9. DRYER VENT.
10. COMBO WASHER / DRYER BOX.
11. MOVABLE KITCHEN ISLAND.
12. PROVIDE FAN RATED REINFORCED J-BOX.
13. ATTIC ACCESS, TOP FLOOR UNITS ONLY.
14. WATER HEATER, SEE PLUMBING DRAWINGS.
15. ACCESS PANEL FOR MECH. UNIT.
16. FIBERGLASS TUB W/ TILE SURROUND.
17. GLASS SHOWER ENCLOSURE W/ TILE WALLS AND ACYRLIC PRE-FABRICATED PAN.
18. FRAMELESS MIRROR.
19. CABLE / COMM. CABINET - SEE ELECT.

RCP LEGEND

NOTE: RCP DIMS ARE FROM FINISH FACE OF WALL

- EXIT LIGHT
- LED LIGHT W/ ROUND BOX
- CEILING MOUNTED LIGHT
- EXTERIOR CEILING MOUNTED LIGHT
- PENDANT LIGHT
- SPRINKLER HEAD - CEILING MOUNTED
- SPRINKLER HEAD - SIDEWALL
- EMERGENCY LIGHT - SIDEWALL
- FLORESCENT STRIP LIGHT
- CEILING FAN
- FIXTURE VANITY LIGHT - WALL MOUNTED
- EXTERIOR LIGHT - WALL MOUNTED
- EXHAUST FAN - CEILING MOUNTED
- SQUARE SUPPLY DIFFUSER - CEILING MOUNTED
- SQUARE RETURN DIFFUSER - CEILING MOUNTED
- SUPPLY DIFFUSER - WALL MOUNTED
- EXHAUST FAN - WALL MOUNTED
- THRU-WALL GRILL
- ATTIC ACCESS PANEL
- 5/8" FR GYP BD CEILING ON RESILIENT CHANNEL - 9'-0" AFF U.N.O.

LAKE COUNTY BUILDING SERVICES
Any errors or omissions in these plans shall be made to conform with the applicable code requirements per Florida Building Code, in accordance with Section 107. Plans were reviewed for code compliance and shall be kept on job site.

RECEIVED FEB 14 2019

Area Schedule- UNIT B2				
Name	Area	Bedrooms	Baths	Den
BALCONY	77 SF	0	0	
UNIT B2	1018 SF	2	2	
	1095 SF			

GENERAL NOTES:

- ALL DIMENSIONS ARE FROM OUTSIDE FACE OF STUD UNLESS NOTED OTHERWISE.
- CONTRACTOR TO FIELD VERIFY ALL DIMENSIONS. NOTIFY ARCHITECT OF ANY DISCREPANCIES.
- EXTERIOR WALL SHOWN FOR REFERENCE ONLY. REFER TO BUILDING PLANS FOR EXTERIOR WALL TYPES, WINDOWS AND LOCATIONS.
- ALL PLUMBING WALLS NEED TO BE COORDINATED WITH PLUMBER TO DETERMINE 2x4 OR 2x6 CONSTRUCTION.
- PROVIDE ONE 2-A:10-B:C 5 lb FIRE EXTINGUISHER PER UNIT. LOCATE PER FIRE DEPARTMENT REQUIREMENTS.
- PROVIDE ACOUSTICAL UNDERLAYMENT UNDERNEATH GYPSUM TOPPING AT ALL TILE / VYNIL FLOOR LOCATIONS ON ELEVATED FLOORS. REFER TO SPECIFICATIONS FOR APPROVED PRODUCT.
- COORDINATE FINISHES WITH INTERIOR DESIGN DOCUMENTS.
- UNIT PLANS SHOWN ARE TYPICAL - SEE BUILING PLANS FOR UNIT ORIENTATION - PLANS MAY NEED TO BE REVERSED - ADJUST DIMENSION LAYOUTS ACCORDINGLY.
- SEE LIFE SAFETY PLAN SHEETS FOR RATED WALL LOCATIONS.
- REFER TO ENLARGED KITCHEN AND BATH PLANS FOR FHA CLEARANCES.
- BALCONY GUARDRAILS 36"h @ 1stFLOOR BALCONIES, 42"h @ ALL LEVELS ABOVE 1st FLOOR. RETURN AND ANCHOR ALL RAILS TO WALL.
- PROVIDE FIRE RATED ICE MAKER BOXES, WASHER BOXES AND DRYER BOXES WHEN LOCATED WITHIN A RATED WALL.

PERMIT REVIEW STAMP

ISSUE HISTORY

No.	Date	Description
1	02/08/2019	ISSUE FOR PERMIT

REVISION HISTORY

No.	Date	Description

© 2017 These documents and their contents are the property of FUGLEBERG KOCH - AA26002103, and are issued only for the specific project noted on these drawings. Any reproduction, modification or distribution of these documents without the expressed written consent of Fugleberg Koch is prohibited by law.

FUGLEBERG KOCH
2555 Temple Trail, Winter Park, FL 32789 (407) 629-0595
www.fuglebergkoch.com AA26002103
CONSULTANT

STATE OF FLORIDA MICHAEL E. GOVE AR94111 REGISTERED ARCHITECT 02/08/2019

SUMMER BAY APTS. II	Drawn: Author
LAKE COUNTY, FL	Checked: Checker
	Approval: Approver
	Date: Issue Date
	Project #: 5389
2 BR UNIT PLANS - B2	
A3.05	

PLOTTED: 2/11/2019 2:34:09 PM

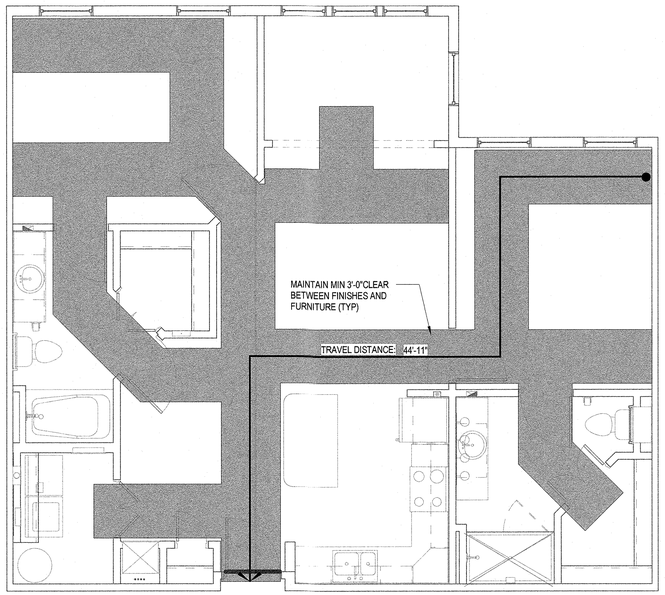

D1 UNIT B2S - ACCESSIBLE ROUTE PLAN
1/4" = 1'-0"

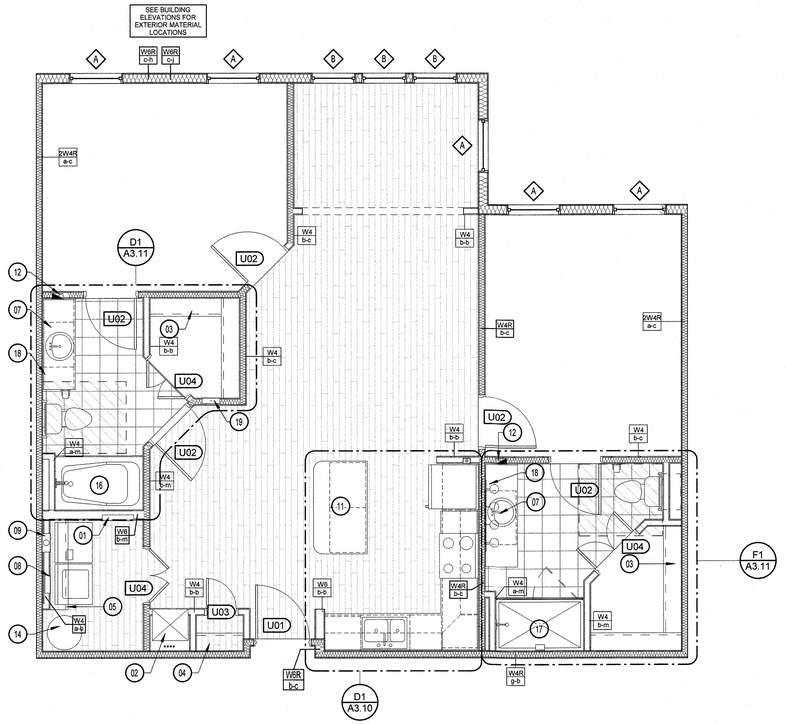

D5 UNIT B2S - REFERENCE PLAN
1/4" = 1'-0"

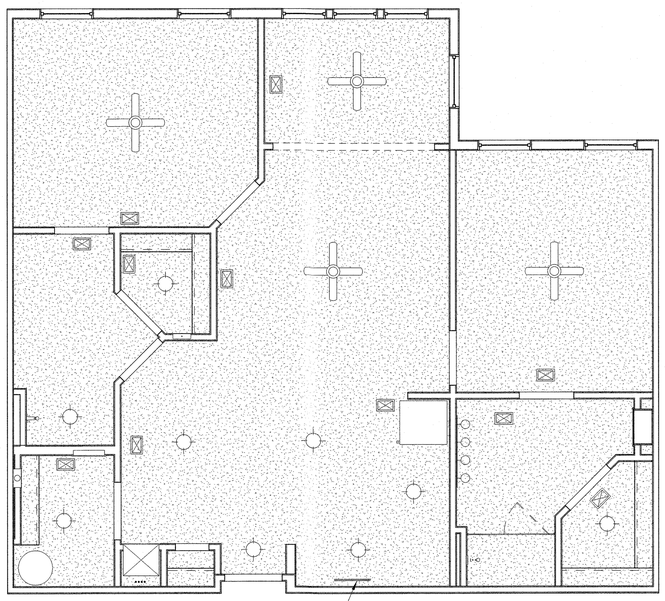

H1 UNIT B2S - RCP
1/4" = 1'-0"

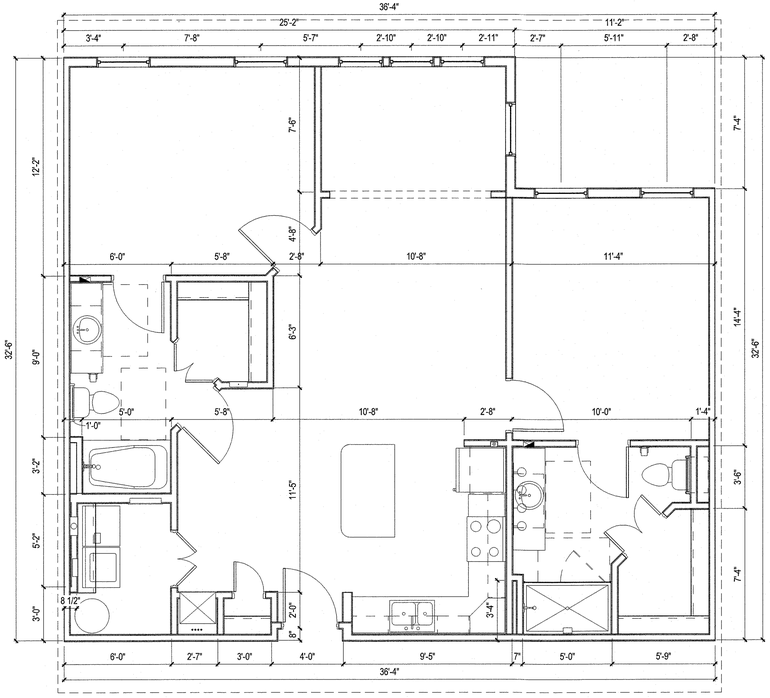

H5 UNIT B2S - DIMENSION PLAN
1/4" = 1'-0"

KEY NOTES:

1. ELECTRICAL PANEL. REFER TO ELECTRICAL DRAWINGS.
2. HVAC UNIT. SEE MECHANICAL DRAWINGS.
3. WIRE SHELF & POLE @ 6'-0".
4. WIRE SHELF @ 3'-0", 5'-0", & 6'-0" AFF.
5. SHELF ABOVE WASHER @ 5'-6" AFF.
6. MAINTAIN MIN. 3-0" CLEAR BETWEEN FINISHES AND FURNITURE TYP.
7. CENTER LIGHTING FIXTURE ABOVE LAVATORY.
8. WASHER BOX.
9. DRYER VENT.
10. COMBO WASHER / DRYER BOX.
11. MOVABLE KITCHEN ISLAND.
12. PROVIDE FAN RATED REINFORCED J-BOX.
13. ATTIC ACCESS, TOP FLOOR UNITS ONLY.
14. WATER HEATER, SEE PLUMBING DRAWINGS.
15. ACCESS PANEL FOR MECH. UNIT.
16. FIBERGLASS TUB W/ TILE SURROUND.
17. GLASS SHOWER ENCLOSURE W/ TILE WALLS AND ACYRLIC PRE-FABRICATED PAN.
18. FRAMELESS MIRROR.
19. _CABLE / COMM. CABINET - SEE ELECT.

RCP LEGEND

NOTE: RCP DIMS ARE FROM FINISH FACE OF WALL

- EXIT LIGHT
- LED LIGHT W/ ROUND BOX
- CEILING MOUNTED LIGHT
- EXTERIOR CEILING MOUNTED LIGHT
- PENDANT LIGHT
- SPRINKLER HEAD - CEILING MOUNTED
- SPRINKLER HEAD - SIDEWALL
- EMERGENCY LIGHT - SIDEWALL
- FLORESCENT STRIP LIGHT
- CEILING FAN
- FIXTURE VANITY LIGHT - WALL MOUNTED
- EXTERIOR LIGHT - WALL MOUNTED
- EXHAUST FAN - CEILING MOUNTED
- SQUARE SUPPLY DIFFUSER - CEILING MOUNTED
- SQUARE RETURN DIFFUSER - CEILING MOUNTED
- SUPPLY DIFFUSER - WALL MOUNTED
- EXHAUST FAN - WALL MOUNTED
- THRU-WALL GRILL
- ATTIC ACCESS PANEL
- 5/8" FR GYP BD CEILING ON RESILIENT CHANNEL - 9'-0" AFF U.N.O.

LAKE COUNTY BUILDING SERVICES
Any errors or omissions in these plans shall be made to conform with the applicable code requirements per Florida Building Code, in accordance with Section 107. Plans were reviewed for code compliance and shall be kept on job site.

RECEIVED FEB 14 2019

Area Schedule- UNIT B2S

Name	Area	Bedrooms	Baths	Den
BALCONY	Not Placed	0	0	
UNIT B2S	1096 SF	2	2	
	1096 SF			

GENERAL NOTES:

- ALL DIMENSIONS ARE FROM OUTSIDE FACE OF STUD UNLESS NOTED OTHERWISE.
- CONTRACTOR TO FIELD VERIFY ALL DIMENSIONS. NOTIFY ARCHITECT OF ANY DISCREPANCIES.
- EXTERIOR WALL SHOWN FOR REFERENCE ONLY. REFER TO BUILDING PLANS FOR EXTERIOR WALL TYPES, WINDOWS AND LOCATIONS.
- ALL PLUMBING WALLS NEED TO BE COORDINATED WITH PLUMBER TO DETERMINE 2x4 OR 2x6 CONSTRUCTION.
- PROVIDE ONE 2-A:10-B:C 5 lb FIRE EXTINGUISHER PER UNIT. LOCATE PER FIRE DEPARTMENT REQUIREMENTS.
- PROVIDE ACOUSTICAL UNDERLAYMENT UNDERNEATH GYPSUM TOPPING AT ALL TILE / VYNIL FLOOR LOCATIONS ON ELEVATED FLOORS. REFER TO SPECIFICATIONS FOR APPROVED PRODUCT.
- COORDINATE FINISHES WITH INTERIOR DESIGN DOCUMENTS.
- UNIT PLANS SHOWN ARE TYPICAL - SEE BUILING PLANS FOR UNIT ORIENTATION - PLANS MAY NEED TO BE REVERSED - ADJUST DIMENSION LAYOUTS ACCORDINGLY.
- SEE LIFE SAFETY PLAN SHEETS FOR RATED WALL LOCATIONS.
- REFER TO ENLARGED KITCHEN AND BATH PLANS FOR FHA CLEARANCES.
- BALCONY GUARDRAILS 36"h @ 1ST FLOOR BALCONIES, 42"h @ ALL LEVELS ABOVE 1ST FLOOR. RETURN AND ANCHOR ALL RAILS TO WALL.
- PROVIDE FIRE RATED ICE MAKER BOXES, WASHER BOXES AND DRYER BOXES WHEN LOCATED WITHIN A RATED WALL.

PERMIT REVIEW STAMP

ISSUE HISTORY

No.	Date	Description
1	02/08/2019	ISSUE FOR PERMIT

REVISION HISTORY

No.	Date	Description

© 2017 These documents and their contents are the property of FUGLEBERG KOCH - AA26002103, and are issued only for the specific project noted on these drawings. Any reproduction, modification or use of these documents without the expressed written consent of Fugleberg Koch, is prohibited by law.

FUGLEBERG KOCH
2555 Temple Trail, Winter Park, FL 32789 (407) 629-0595
www.fuglebergkoch.com AA26002103
CONSULTANT

MICHAEL E. GOVE
FLORIDA LICENSE # AR94111
STATE OF FLORIDA MICHAEL E. GOVE AR94111 REGISTERED ARCHITECT
02/08/2019

SUMMER BAY APTS. II
LAKE COUNTY, FL.

Drawn:	Author
Checked:	Checker
Approval:	Approver
Date:	Issue Date
Project #:	5389

2 BR UNIT PLANS - B2S

A3.06

PLOTTED: 2/11/2019 2:34:19 PM

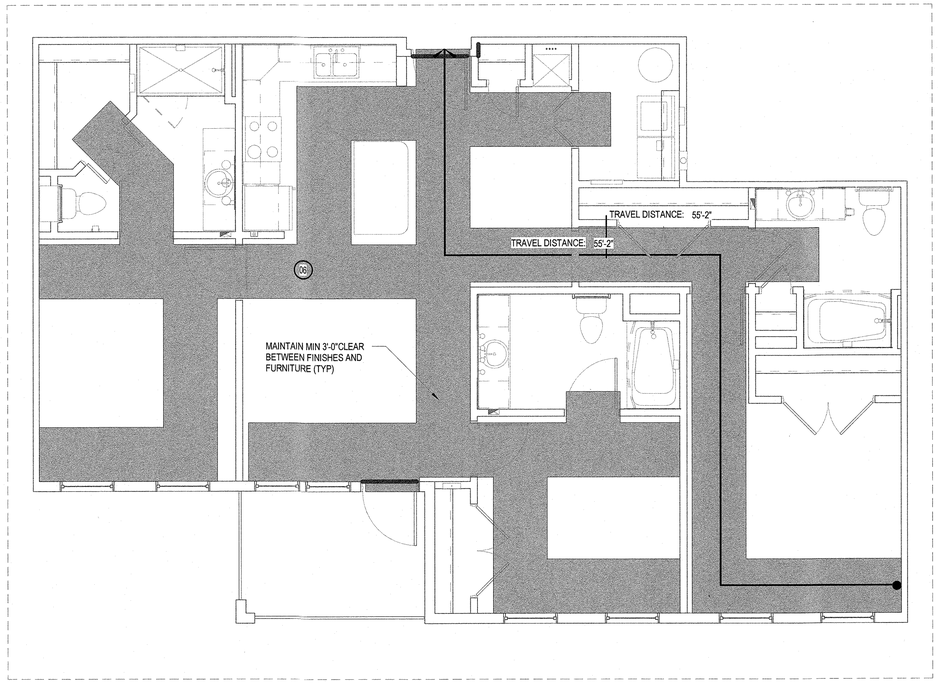

D1 UNIT C1 - ACCESSIBLE ROUTE PLAN
1/4" = 1'-0"

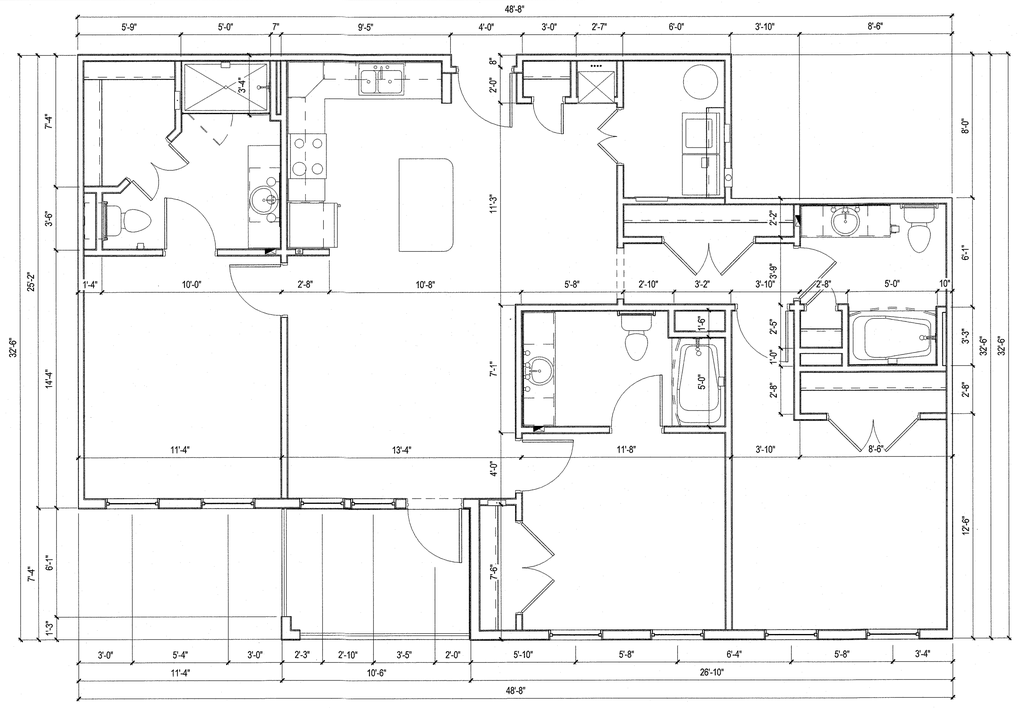

H1 UNIT C1 - DIMENSION PLAN
1/4" = 1'-0"

KEY NOTES:

1. ELECTRICAL PANEL. REFER TO ELECTRICAL DRAWINGS.
2. HVAC UNIT. SEE MECHANICAL DRAWINGS.
3. WIRE SHELF & POLE @ 6'-0".
4. WIRE SHELF @ 3'-0", 5'-0", & 6'-0" AFF.
5. SHELF ABOVE WASHER @ 5'-6" AFF.
6. MAINTAIN MIN. 3-0" CLEAR BETWEEN FINISHES AND FURNITURE TYP.
7. CENTER LIGHTING FIXTURE ABOVE LAVATORY.
8. WASHER BOX.
9. DRYER VENT.
10. COMBO WASHER / DRYER BOX.
11. MOVABLE KITCHEN ISLAND.
12. PROVIDE FAN RATED REINFORCED J-BOX.
13. ATTIC ACCESS, TOP FLOOR UNITS ONLY.
14. WATER HEATER, SEE PLUMBING DRAWINGS.
15. ACCESS PANEL FOR MECH. UNIT.
16. FIBERGLASS TUB W/ TILE SURROUND.
17. GLASS SHOWER ENCLOSURE W/ TILE WALLS AND ACYRLIC PRE-FABRICATED PAN.
18. FRAMELESS MIRROR.
19. CABLE / COMM. CABINET - SEE ELECT.

RCP LEGEND

NOTE: RCP DIMS ARE FROM FINISH FACE OF WALL

- EXIT LIGHT
- LED LIGHT W/ ROUND BOX
- CEILING MOUNTED LIGHT
- EXTERIOR CEILING MOUNTED LIGHT
- PENDANT LIGHT
- SPRINKLER HEAD - CEILING MOUNTED
- SPRINKLER HEAD - SIDEWALL
- EMERGENCY LIGHT - SIDEWALL
- FLORESCENT STRIP LIGHT
- CEILING FAN
- FIXTURE VANITY LIGHT - WALL MOUNTED
- EXTERIOR LIGHT - WALL MOUNTED
- EXHAUST FAN - CEILING MOUNTED
- SQUARE SUPPLY DIFFUSER - CEILING MOUNTED
- SQUARE RETURN DIFFUSER - CEILING MOUNTED
- SUPPLY DIFFUSER - WALL MOUNTED
- EXHAUST FAN - WALL MOUNTED
- THRU-WALL GRILL
- ATTIC ACCESS PANEL
- 5/8" FR GYP BD CEILING ON RESILIENT CHANNEL - 9'-0" AFF U.N.O.

LAKE COUNTY BUILDING SERVICES
Any errors or omissions in these plans shall be made to conform with the applicable code requirements per Florida Building Code, in accordance with Section 107. Plans were reviewed for code compliance and shall be kept on job site.

RECEIVED FEB 14 2019

Area Schedule- UNIT C1

Name	Area	Bedrooms	Baths	Den	Occupants
BALCONY	78 SF	3	3		
UNIT C1	1320 SF	3	3		7
	1399 SF				

GENERAL NOTES:

- ALL DIMENSIONS ARE FROM OUTSIDE FACE OF STUD UNLESS NOTED OTHERWISE.
- CONTRACTOR TO FIELD VERIFY ALL DIMENSIONS. NOTIFY ARCHITECT OF ANY DISCREPANCIES.
- EXTERIOR WALL SHOWN FOR REFERENCE ONLY. REFER TO BUILDING PLANS FOR EXTERIOR WALL TYPES, WINDOWS AND LOCATIONS.
- ALL PLUMBING WALLS NEED TO BE COORDINATED WITH PLUMBER TO DETERMINE 2x4 OR 2x6 CONSTRUCTION.
- PROVIDE ONE 2-A:10-B:C 5 lb FIRE EXTINGUISHER PER UNIT. LOCATE PER FIRE DEPARTMENT REQUIREMENTS.
- PROVIDE ACOUSTICAL UNDERLAYMENT UNDERNEATH GYPSUM TOPPING AT ALL TILE / VYNIL FLOOR LOCATIONS ON ELEVATED FLOORS. REFER TO SPECIFICATIONS FOR APPROVED PRODUCT.
- COORDINATE FINISHES WITH INTERIOR DESIGN DOCUMENTS.
- UNIT PLANS SHOWN ARE TYPICAL - SEE BUILING PLANS FOR UNIT ORIENTATION - PLANS MAY NEED TO BE REVERSED - ADJUST DIMENSION LAYOUTS ACCORDINGLY.
- SEE LIFE SAFETY PLAN SHEETS FOR RATED WALL LOCATIONS.
- REFER TO ENLARGED KITCHEN AND BATH PLANS FOR FHA CLEARANCES.
- BALCONY GUARDRAILS 36"h @ 1stFLOOR BALCONIES, 42"h @ ALL LEVELS ABOVE 1st FLOOR. RETURN AND ANCHOR ALL RAILS TO WALL.
- PROVIDE FIRE RATED ICE MAKER BOXES, WASHER BOXES AND DRYER BOXES WHEN LOCATED WITHIN A RATED WALL.

PERMIT REVIEW STAMP

ISSUE HISTORY

No.	Date	Description
1	02/08/2019	ISSUE FOR PERMIT

REVISION HISTORY

No.	Date	Description

© 2017 These documents and their contents are the property of FUGLEBERG KOCH, and are issued only for the specific project listed on these drawings. Any reproductions, revisions, or modifications of these documents without the expressed written consent of Fugleberg Koch, is prohibited by law.

FUGLEBERG KOCH
2555 Temple Trail, Winter Park, FL 32789 (407) 629-0595
www.fuglebergkoch.com AA26002103
CONSULTANT

MICHAEL E. GOVE
LICENSED ARCHITECT AR94111
STATE OF FLORIDA
MICHAEL E. GOVE
AR94111
REGISTERED ARCHITECT
02/08/2019

SUMMER BAY APTS. II
LAKE COUNTY, FL

Drawn:	Author
Checked:	Checker
Approval:	Approver
Date:	Issue Date
Project #:	5389

3 BR UNIT PLANS - C1

A3.07

PLOTTED: 2/11/2019 2:34:26 PM

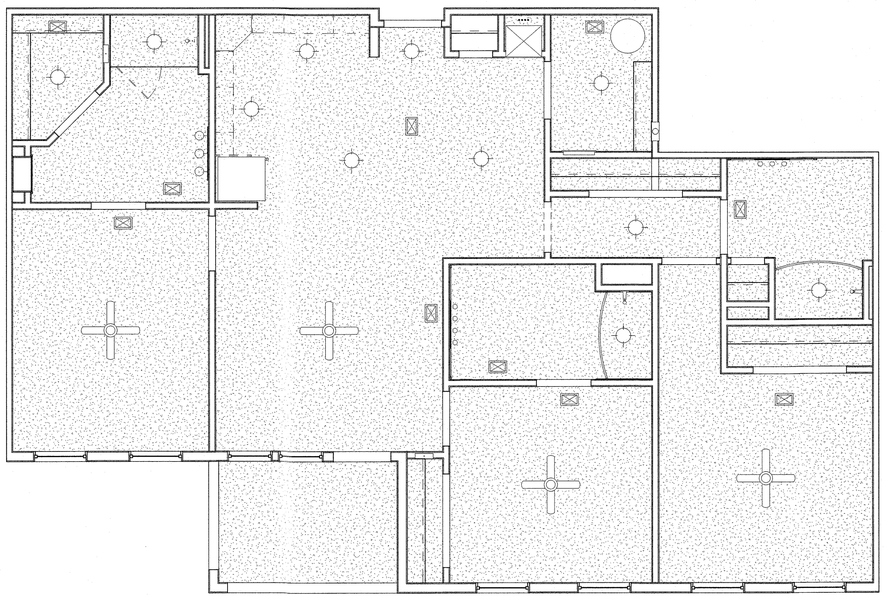

H1 UNIT C1 - RCP
1/4" = 1'-0"

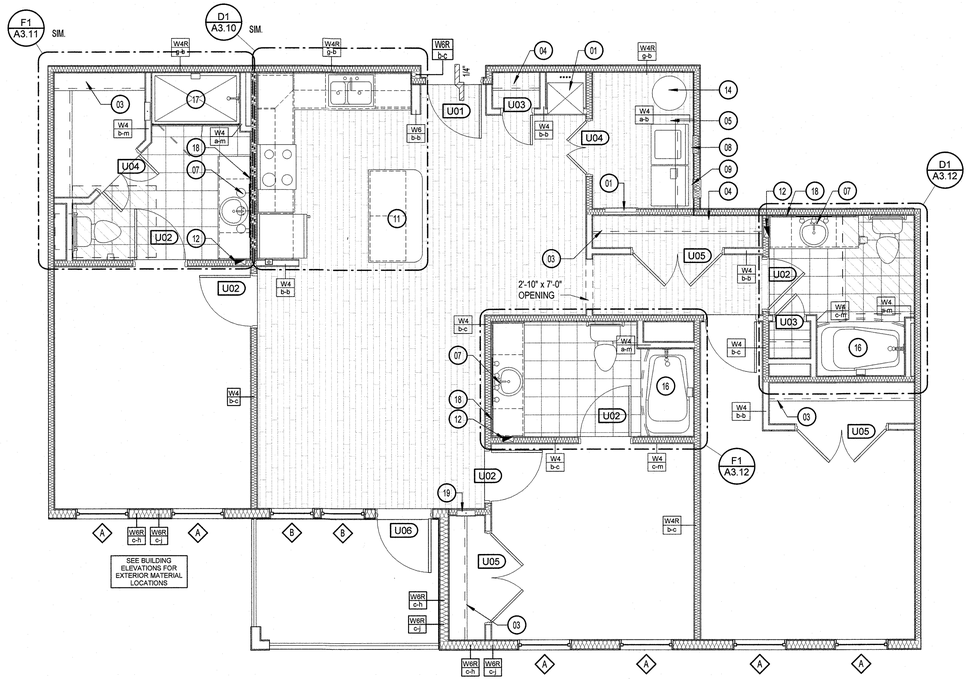

H5 UNIT C1 - REFERENCE PLAN
1/4" = 1'-0"

KEY NOTES:

1. ELECTRICAL PANEL. REFER TO ELECTRICAL DRAWINGS.
2. HVAC UNIT. SEE MECHANICAL DRAWINGS.
3. WIRE SHELF & POLE @ 6'-0".
4. WIRE SHELF @ 3'-0", 5'-0", & 6'-0" AFF.
5. SHELF ABOVE WASHER @ 5'-6" AFF.
6. MAINTAIN MIN. 3-0" CLEAR BETWEEN FINISHES AND FURNITURE TYP.
7. CENTER LIGHTING FIXTURE ABOVE LAVATORY.
8. WASHER BOX.
9. DRYER VENT.
10. COMBO WASHER / DRYER BOX.
11. MOVABLE KITCHEN ISLAND.
12. PROVIDE FAN RATED REINFORCED J-BOX.
13. ATTIC ACCESS, TOP FLOOR UNITS ONLY.
14. WATER HEATER, SEE PLUMBING DRAWINGS.
15. ACCESS PANEL FOR MECH. UNIT.
16. FIBERGLASS TUB W/ TILE SURROUND.
17. GLASS SHOWER ENCLOSURE W/ TILE WALLS AND ACYRLIC PRE-FABRICATED PAN.
18. FRAMELESS MIRROR.
19. CABLE / COMM. CABINET - SEE ELECT.

RCP LEGEND

NOTE: RCP DIMS ARE FROM FINISH FACE OF WALL

- EXIT LIGHT
- LED LIGHT W/ ROUND BOX
- CEILING MOUNTED LIGHT
- EXTERIOR CEILING MOUNTED LIGHT
- PENDANT LIGHT
- SPRINKLER HEAD - CEILING MOUNTED
- SPRINKLER HEAD - SIDEWALL
- EMERGENCY LIGHT - SIDEWALL
- FLORESCENT STRIP LIGHT
- CEILING FAN
- FIXTURE VANITY LIGHT - WALL MOUNTED
- EXTERIOR LIGHT - WALL MOUNTED
- EXHAUST FAN - CEILING MOUNTED
- SQUARE SUPPLY DIFFUSER - CEILING MOUNTED
- SQUARE RETURN DIFFUSER - CEILING MOUNTED
- SUPPLY DIFFUSER - WALL MOUNTED
- EXHAUST FAN - WALL MOUNTED
- THRU-WALL GRILL
- ATTIC ACCESS PANEL
- 5/8" FR GYP BD CEILING ON RESILIENT CHANNEL - 9'-0" AFF U.N.O.

LAKE COUNTY BUILDING SERVICES
Any errors or omissions in these plans shall be made to conform with the applicable code requirements per Florida Building Code, in accordance with Section 107. Plans were reviewed for code compliance and shall be kept on job site,

RECEIVED FEB 14 2019

Area Schedule- UNIT C1

Name	Area	Bedrooms	Baths	Den	Occupants
BALCONY	78 SF	3	3		
UNIT C1	1320 SF	3	3		7
	1399 SF				

GENERAL NOTES:

- ALL DIMENSIONS ARE FROM OUTSIDE FACE OF STUD UNLESS NOTED OTHERWISE.
- CONTRACTOR TO FIELD VERIFY ALL DIMENSIONS. NOTIFY ARCHITECT OF ANY DISCREPANCIES.
- EXTERIOR WALL SHOWN FOR REFERENCE ONLY. REFER TO BUILDING PLANS FOR EXTERIOR WALL TYPES, WINDOWS AND LOCATIONS.
- ALL PLUMBING WALLS NEED TO BE COORDINATED WITH PLUMBER TO DETERMINE 2x4 OR 2x6 CONSTRUCTION.
- PROVIDE ONE 2-A:10-B:C 5 lb FIRE EXTINGUISHER PER UNIT. LOCATE PER FIRE DEPARTMENT REQUIREMENTS.
- PROVIDE ACOUSTICAL UNDERLAYMENT UNDERNEATH GYPSUM TOPPING AT ALL TILE / VYNIL FLOOR LOCATIONS ON ELEVATED FLOORS. REFER TO SPECIFICATIONS FOR APPROVED PRODUCT.
- COORDINATE FINISHES WITH INTERIOR DESIGN DOCUMENTS.
- UNIT PLANS SHOWN ARE TYPICAL - SEE BUILING PLANS FOR UNIT ORIENTATION - PLANS MAY NEED TO BE REVERSED - ADJUST DIMENSION LAYOUTS ACCORDINGLY.
- SEE LIFE SAFETY PLAN SHEETS FOR RATED WALL LOCATIONS.
- REFER TO ENLARGED KITCHEN AND BATH PLANS FOR FHA CLEARANCES.
- BALCONY GUARDRAILS 36"h @ 1ST FLOOR BALCONIES, 42"h @ ALL LEVELS ABOVE 1ST FLOOR. RETURN AND ANCHOR ALL RAILS TO WALL.
- PROVIDE FIRE RATED ICE MAKER BOXES, WASHER BOXES AND DRYER BOXES WHEN LOCATED WITHIN A RATED WALL.

PERMIT REVIEW STAMP

ISSUE HISTORY

No.	Date	Description
1	02/08/2019	ISSUE FOR PERMIT

REVISION HISTORY

No.	Date	Description

© 2017 These documents and their contents are the property of FUGLEBERG KOCH - AA0002103, and are issued only for the specific project noted on these drawings. Any reproductions, revisions, or modifications of these documents without the expressed written consent of Fugleberg Koch, is prohibited by law.

FUGLEBERG KOCH
2555 Temple Trail, Winter Park, FL 32789 (407) 629-0595
www.fuglebergkoch.com AA26002103
CONSULTANT

MICHAEL E. GOVE
ARCHITECT LICENSE # AR94111
STATE OF FLORIDA MICHAEL E. GOVE AR94111 REGISTERED ARCHITECT
02/08/2019

SUMMER BAY APTS. II
LAKE COUNTY, FL

Drawn:	Author
Checked:	Checker
Approval:	Approver
Date:	Issue Date
Project #:	5389

3 BR UNIT PLANS - C1

A3.08

PLOTTED: 2/11/2019 2:34:35 PM

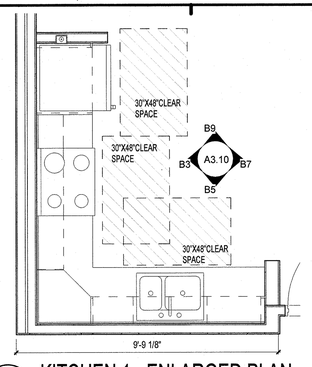

B1 KITCHEN 1 - ENLARGED PLAN
3/8" = 1'-0"

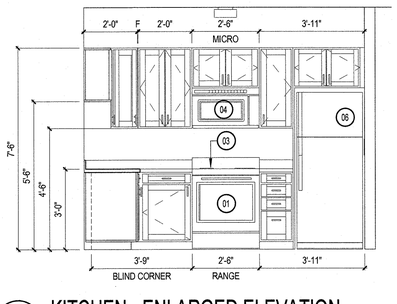

B3 KITCHEN - ENLARGED ELEVATION
3/8" = 1'-0"

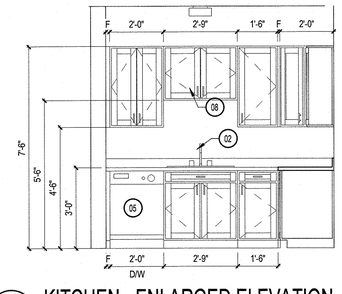

B5 KITCHEN - ENLARGED ELEVATION
3/8" = 1'-0"

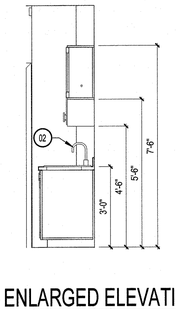

B7 KITCHEN - ENLARGED ELEVATION
3/8" = 1'-0"

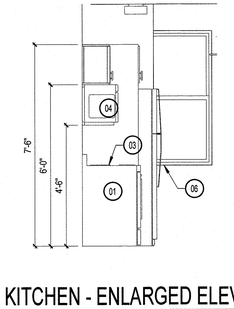

B9 KITCHEN - ENLARGED ELEVATION
3/8" = 1'-0"

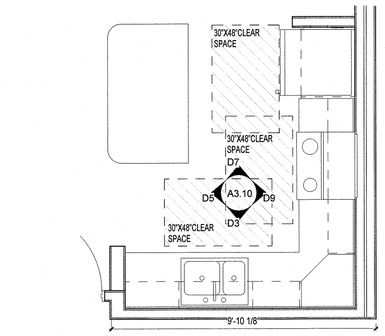

D1 KITCHEN 2 - ENLARGED PLAN
3/8" = 1'-0"

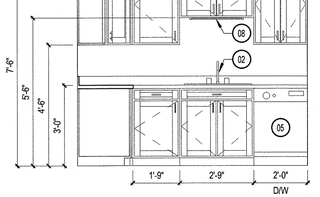

D3 KITCHEN - ENLARGED ELEVATION
3/8" = 1'-0"

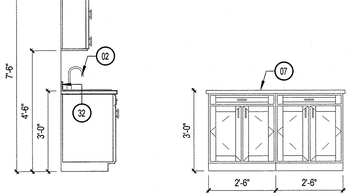

D5 KITCHEN - ENLARGED ELEVATION
3/8" = 1'-0"

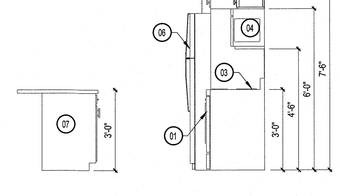

D7 KITCHEN - ENLARGED ELEVATION
3/8" = 1'-0"

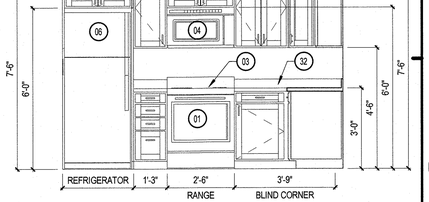

D9 KITCHEN - ENLARGED ELEVATION
3/8" = 1'-0"

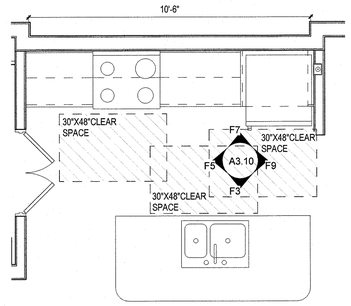

F1 KITCHEN 3 - ENLARGED PLAN
3/8" = 1'-0"

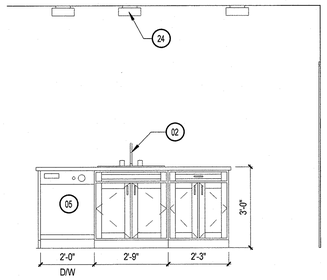

F3 KITCHEN - ENLARGED ELEVATION
3/8" = 1'-0"

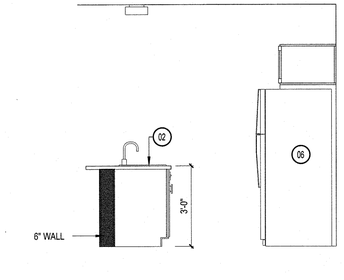

F5 KITCHEN - ENLARGED ELEVATION
3/8" = 1'-0"

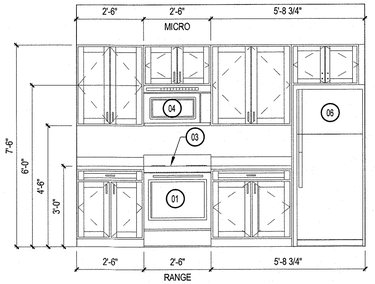

F7 KITCHEN - ENLARGED ELEVATION
3/8" = 1'-0"

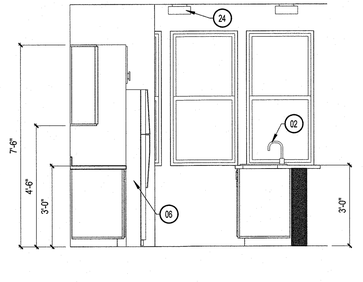

F9 KITCHEN - ENLARGED ELEVATION
3/8" = 1'-0"

LAKE COUNTY BUILDING SERVICES
Any errors or omissions in these plans shall be made to conform with the applicable code requirements per Florida Building Code, in accordance with Section 107. Plans were reviewed for code compliance and shall be kept on job site.

RECEIVED FEB 14 2019

LEGEND:

01. OVEN
02. SINK W/ GARBAGE DISPOSAL
03. RANGE
04. MICROWAVE W/ BUILT-IN HOOD
05. DISHWASHER
06. REFRIGERATOR
07. MOVEABLE ISLAND
08. UNDER CABINET LIGHT FIXTURE
09. FRAMELESS MIRROR
10. VANITY CABINET W/SINK
11. BATH TUB
12. 12" TOWEL BAR @ 48" A.F.F.
13. 18" TOWEL BAR @ 48" A.F.F.
14. 24" TOWEL BAR @ 48" A.F.F.
15. WATER CLOSET, STD. HT.
16. TOILET PAPER HOLDER
17. CURVED SHOWER CURTAIN ROD @ 6'-4" A.F.F.
18. SHOWER HEAD @ 7'-2" A.F.F.
19. GRAB BAR REINFORCEMENT, BTWN. 2'-6" MAX. AF.F. & 3'-2" MIN. A.F.F.
20. HAND HELD/FIXED SHOWER SPRAY UNIT W/ HOSE 60" MIN. LONG & ADJUSTABLE BAR
21. OFFSET TUB CONTROL TO 8" HORIZONTAL FROM TUB SKIRT AT ALL GROUND FLOOR BATHROOMS IN ANSI UNITS ONLY.
22. MEDICINE CABINET
23. REMOVABLE IN TUB SEAT
24. LIGHT FIXTURE (SEE ELECTRICAL)
25. 12" WIRE SHELF AND ROD AT 5'-0" & 6'-0" AFF
26. SHOWER
27. CABINET 24" x 30"
28. STRAIGHT ROD
29. PAPER TOWEL DISPENSER
30. 4" x 4" TILE
31. CABINET 15" x 24"
32. SOAP DISH
33. 4" BACKSPLASH
34. GLASS SHOWER DOOR

BLOCKING - - - - -

PERMIT REVIEW STAMP

ISSUE HISTORY

No.	Date	Description
1	02/08/2019	ISSUE FOR PERMIT

REVISION HISTORY

No.	Date	Description

© 2017 These documents and their contents are the property of FUGLEBERG KOCH ARCHITECTS, LLC. Any reproduction, publication, or use of these documents without the express written permission of FUGLEBERG KOCH ARCHITECTS, LLC is prohibited by law. Any unauthorized use shall be at the user's sole risk and without liability to FUGLEBERG KOCH ARCHITECTS, LLC. Any drawings, designs, concepts, specifications, and other documents prepared by FUGLEBERG KOCH ARCHITECTS, LLC, whether in hard copy or electronic format, are instruments of service and shall remain the property of FUGLEBERG KOCH ARCHITECTS, LLC whether the project for which they are made is executed or not. They are not to be used by the owner or any other person or entity on any other project without the prior written consent of FUGLEBERG KOCH ARCHITECTS, LLC.

FUGLEBERG KOCH
2555 Temple Trail, Winter Park, FL 32789 (407) 629-0595
www.fuglebergkoch.com AA26002103
CONSULTANT

BOARD OF GOVE
FLORIDA LICENSE #AR94111
STATE OF FLORIDA
MICHAEL F. GOVE
AR94111
REGISTERED ARCHITECT
02/08/2019

SUMMER BAY APTS. II
LAKE COUNTY, FL

Drawn:	Author
Checked:	Checker
Approval:	Approver
Date:	Issue Date
Project #:	5389

ENLARGED PLANS - KITCHEN

A3.10

PLOTTED: 2/11/2019 2:35:42 PM

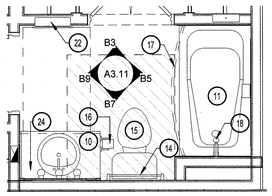

B1 BATHROOM 1 - ENLARGED PLAN (TYPE A)
3/8" = 1'-0"

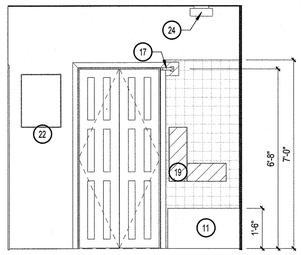

B3 BATHROOM ENLARGED ELEVATION
3/8" = 1'-0"

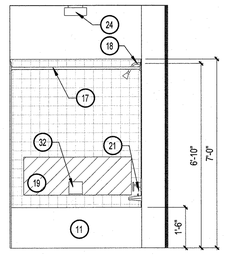

B5 BATHROOM ENLARGED ELEVATION
3/8" = 1'-0"

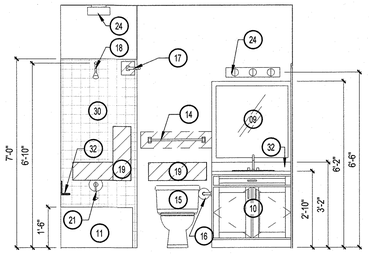

B7 BATHROOM ENLARGED ELEVATION
3/8" = 1'-0"

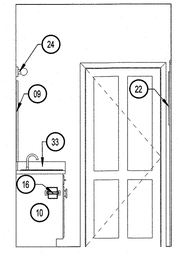

B9 BATHROOM ENLARGED ELEVATION
3/8" = 1'-0"

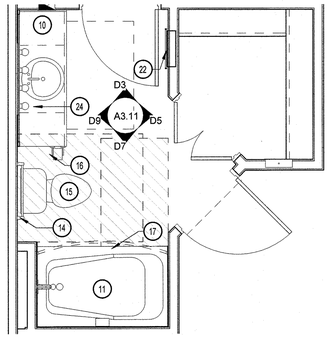

D1 BATHROOM 2 - ENLARGED PLAN
3/8" = 1'-0"

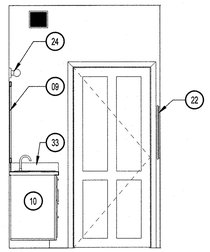

D3 BATHROOM ENLARGED ELEVATION
3/8" = 1'-0"

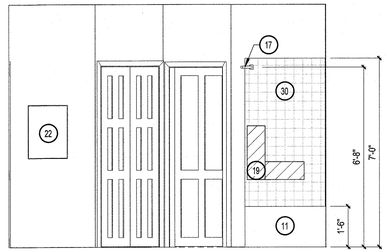

D5 BATHROOM ENLARGED ELEVATION
3/8" = 1'-0"

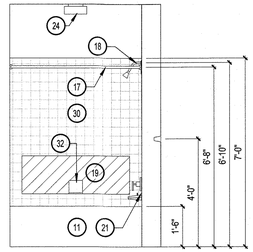

D7 BATHROOM ENLARGED ELEV.
3/8" = 1'-0"

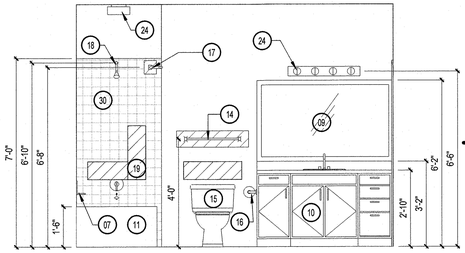

D9 BATHROOM ENLARGED ELEVATION
3/8" = 1'-0"

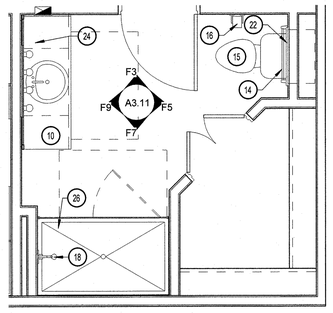

F1 BATHROOM 3 - ENLARGED PLAN
3/8" = 1'-0"

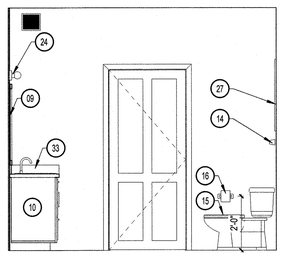

F3 BATHROOM ENLARGED ELEVATION
3/8" = 1'-0"

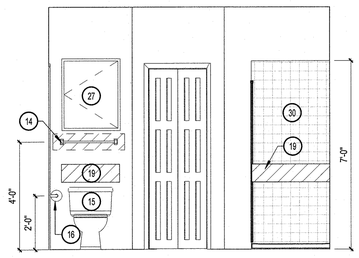

F5 BATHROOM ENLARGED ELEVATION
3/8" = 1'-0"

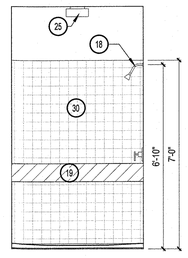

F7 BATHROOM ENLARGED ELEVATION
3/8" = 1'-0"

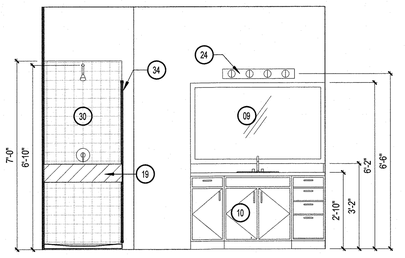

F9 BATHROOM ENLARGED ELEVATION
3/8" = 1'-0"

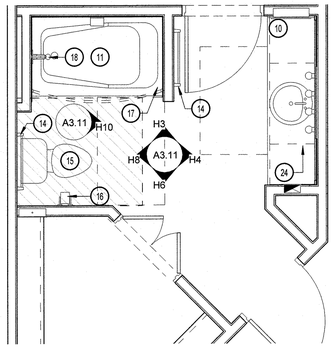

H1 BATHROOM 4 - ENLARGED PLAN
3/8" = 1'-0"

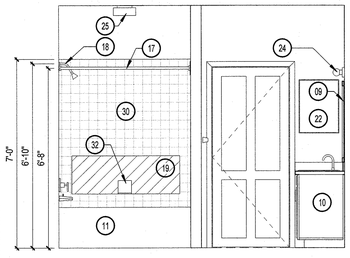

H3 BATHROOM ENLARGED ELEVATION
3/8" = 1'-0"

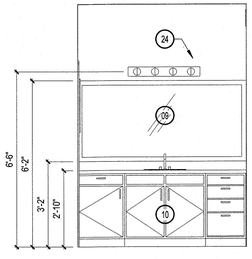

H4 BATHROOM ENLARGED ELEVATION
3/8" = 1'-0"

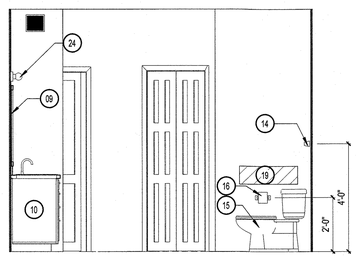

H6 BATHROOM ENLARGED ELEVATION
3/8" = 1'-0"

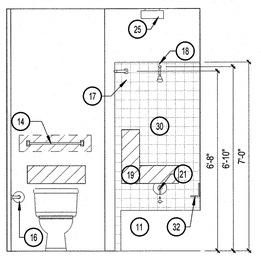

H8 BATHROOM ENLARGED ELEVATION
3/8" = 1'-0"

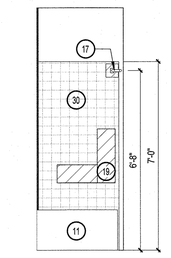

H10 BATH ELEV.
3/8" = 1'-0"

LEGEND:

01. OVEN
02. SINK W/ GARBAGE DISPOSAL
03. RANGE
04. MICROWAVE W/ BUILT-IN HOOD
05. DISHWASHER
06. REFRIGERATOR
07. MOVEABLE ISLAND
08. UNDER CABINET LIGHT FIXTURE
09. FRAMELESS MIRROR
10. VANITY CABINET W/SINK
11. BATH TUB
12. 12" TOWEL BAR @ 48" A.F.F.
13. 18" TOWEL BAR @ 48" A.F.F.
14. 24" TOWEL BAR @ 48" A.F.F.
15. WATER CLOSET, STD. HT.
16. TOILET PAPER HOLDER
17. CURVED SHOWER CURTAIN ROD @ 6'-4" A.F.F.
18. SHOWER HEAD @ 7'-2" A.F.F.
19. GRAB BAR REINFORCEMENT, BTWN. 2'-6" MAX. AF.F. & 3'-2" MIN. A.F.F.
20. HAND HELD/FIXED SHOWER SPRAY UNIT W/ HOSE 60" MIN. LONG & ADJUSTABLE BAR
21. OFFSET TUB CONTROL TO 8" HORIZONTAL FROM TUB SKIRT AT ALL GROUND FLOOR BATHROOMS IN ANSI UNITS ONLY.
22. MEDICINE CABINET
23. REMOVABLE IN TUB SEAT
24. LIGHT FIXTURE (SEE ELECTRICAL)
25. 12" WIRE SHELF AND ROD AT 5'-0" & 6'-0" AFF
26. SHOWER
27. CABINET 24" x 30"
28. STRAIGHT ROD
29. PAPER TOWEL DISPENSER
30. 4" x 4" TILE
31. CABINET 15" x 24"
32. SOAP DISH
33. 4" BACKSPLASH
34. GLASS SHOWER DOOR

BLOCKING - - - - -

PERMIT REVIEW STAMP

ISSUE HISTORY

No.	Date	Description
1	02/08/2019	ISSUE FOR PERMIT

REVISION HISTORY

No.	Date	Description

© 2019 These documents are the property of FUGLEBERG KOCH, LA2600103, and are issued only for the specific project listed on these drawings. Any reproductions, revisions, or modifications of these documents without the expressed written consent of Fugleberg Koch, is prohibited by law.

FUGLEBERG KOCH
2555 Temple Trail, Winter Park, FL 32789 (407) 629-0595
www.fuglebergkoch.com AA26002103
CONSULTANT

MICHAEL E. GOVE
LICENSE NUMBER AR94111
STATE OF FLORIDA
MICHAEL E. GOVE
AR94111
REGISTERED ARCHITECT
02/08/2019

SUMMER BAY APTS. II
LAKE COUNTY, FL

Drawn:	Author
Checked:	Checker
Approved:	Approver
Date:	Issue Date
Project #:	5389

ENLARGED PLANS - BATHROOM

A3.11

LAKE COUNTY BUILDING SERVICES
Any errors or omissions in these plans shall be made to conform with the applicable code requirements per Florida Building Code, in accordance with Section 107. Plans were reviewed for code compliance and shall be kept on job site.

RECEIVED FEB 14 2019

PLOTTED: 2/11/2019 2:37:19 PM

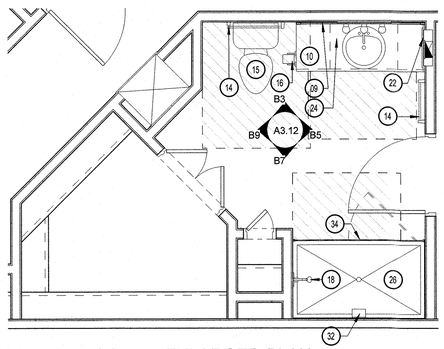

B1 BATHROOM 5 - ENLARGED PLAN
3/8" = 1'-0"

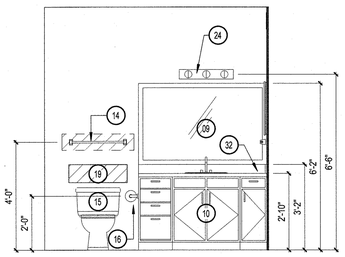

B3 BATHROOM ENLARGED ELEVATION
3/8" = 1'-0"

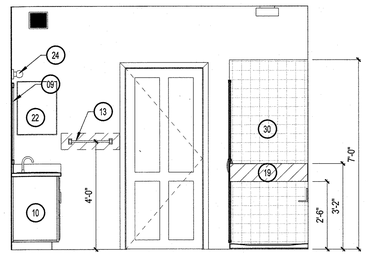

B5 BATHROOM ENLARGED ELEVATION
3/8" = 1'-0"

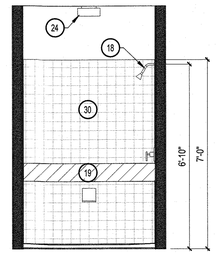

B7 BATHROOM ENLARGED ELEVATION
3/8" = 1'-0"

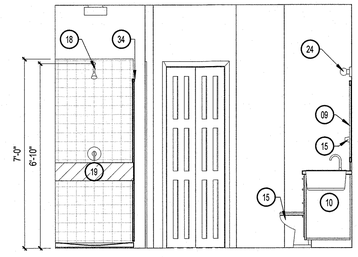

B9 BATHROOM ENLARGED ELEVATION
3/8" = 1'-0"

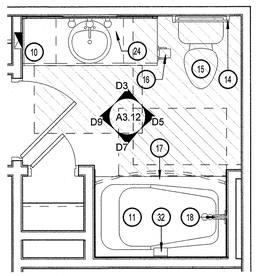

D1 BATHROOM 6 - ENLARGED PLAN
3/8" = 1'-0"

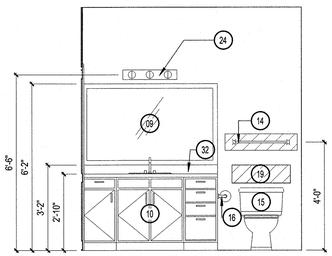

D3 BATHROOM ENLARGED ELEVATION
3/8" = 1'-0"

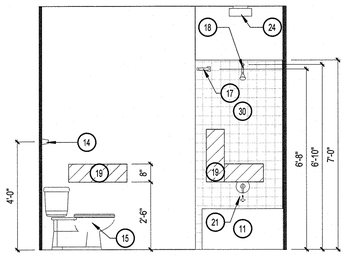

D5 BATHROOM ENLARGED ELEVATION
3/8" = 1'-0"

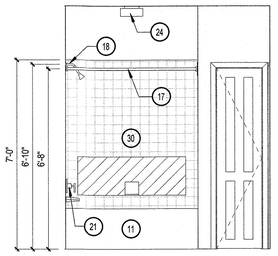

D7 BATHROOM ENLARGED ELEVATION
3/8" = 1'-0"

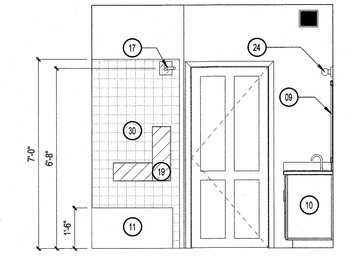

D9 BATHROOM ENLARGED ELEVATION
3/8" = 1'-0"

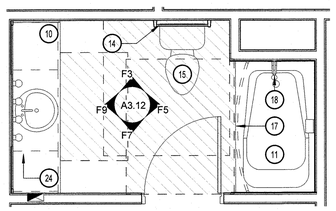

F1 BATHROOM 7 - ENLARGED PLAN
3/8" = 1'-0"

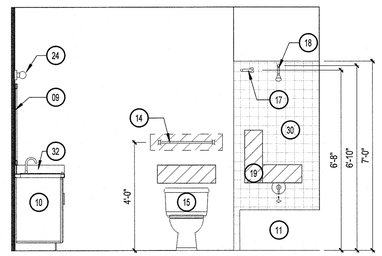

F3 BATHROOM ENLARGED ELEVATION
3/8" = 1'-0"

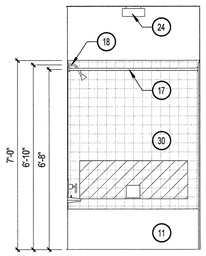

F5 BATHROOM ENLARGED ELEVATION
3/8" = 1'-0"

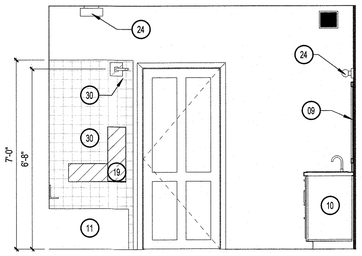

F7 BATHROOM ENLARGED ELEVATION
3/8" = 1'-0"

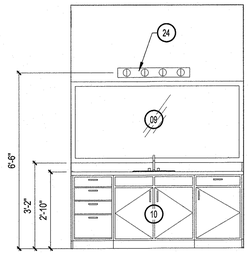

F9 BATHROOM ENLARGED ELEVATION
3/8" = 1'-0"

LAKE COUNTY BUILDING SERVICES
Any errors or omissions in these plans shall be made to conform with the applicable code requirements per Florida Building Code, in accordance with Section 107. Plans were reviewed for code compliance and shall be kept on job site.

RECEIVED FEB 14 2019

LEGEND:

01. OVEN
02. SINK W/ GARBAGE DISPOSAL
03. RANGE
04. MICROWAVE W/ BUILT-IN HOOD
05. DISHWASHER
06. REFRIGERATOR
07. MOVEABLE ISLAND
08. UNDER CABINET LIGHT FIXTURE
09. FRAMELESS MIRROR
10. VANITY CABINET W/SINK
11. BATH TUB
12. 12" TOWEL BAR @ 48" A.F.F.
13. 18" TOWEL BAR @ 48" A.F.F.
14. 24" TOWEL BAR @ 48" A.F.F.
15. WATER CLOSET, STD. HT.
16. TOILET PAPER HOLDER
17. CURVED SHOWER CURTAIN ROD @ 6'-4" A.F.F.
18. SHOWER HEAD @ 7'-2" A.F.F.
19. GRAB BAR REINFORCEMENT, BTWN. 2'-6" MAX. AF.F. & 3'-2" MIN. A.F.F.
20. HAND HELD/FIXED SHOWER SPRAY UNIT W/ HOSE 60" MIN. LONG & ADJUSTABLE BAR
21. OFFSET TUB CONTROL TO 8" HORIZONTAL FROM TUB SKIRT AT ALL GROUND FLOOR BATHROOMS IN ANSI UNITS ONLY.
22. MEDICINE CABINET
23. REMOVABLE IN TUB SEAT
24. LIGHT FIXTURE (SEE ELECTRICAL)
25. 12" WIRE SHELF AND ROD AT 5'-0" & 6'-0" AFF
26. SHOWER
27. CABINET 24" x 30"
28. STRAIGHT ROD
29. PAPER TOWEL DISPENSER
30. 4" x 4" TILE
31. CABINET 15" x 24"
32. SOAP DISH
33. 4" BACKSPLASH
34. GLASS SHOWER DOOR

BLOCKING - - - - -

PERMIT REVIEW STAMP

ISSUE HISTORY

No.	Date	Description
1	02/08/2019	ISSUE FOR PERMIT

REVISION HISTORY

No.	Date	Description

© 2019 These documents are the property of FUGLEBERG KOCH - AA26002103, and are issued only for the specific project noted on these drawings. Any reproductions, revisions, or modifications of these documents without the expressed written consent of Fugleberg Koch, is prohibited by law.

FUGLEBERG KOCH
2555 Temple Trail, Winter Park, FL 32789 (407) 629-0595
www.fuglebergkoch.com AA26002103
CONSULTANT

MICHAEL E. GOVE
FLORIDA LICENSE # AR94111

STATE OF FLORIDA · MICHAEL E. GOVE · AR94111 · REGISTERED ARCHITECT · 02/08/2019

SUMMER BAY APTS. II
LAKE COUNTY, FL

Drawn: Author
Checked: Checker
Approval: Approver
Date: Issue Date
Project #: 5389

ENLARGED PLANS - BATHROOM

A3.12

PLOTTED: 2/11/2019 2:39:52 PM

NOTE:
ALL WOOD TO BE 3/4" CABINET GRADE PLYWOOD. SPECIES AND STAIN TO MATCH OTHER CABINETS. COVER EXPOSED EDGES WITH SOLID WOOD OR WOOD LIKE EDGE BAND. SECURE FASCIA WITH CONCEALED WOOD CLEATS WITH (6), EQUALLY SPACED #6X1/2" FLAT-HEAD, SQUARE DRIVE CABINET SCREWS.

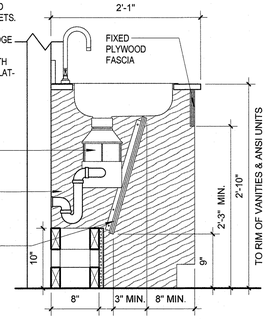

B1 REMOVABLE BASE SINK CABINET
1" = 1'-0"

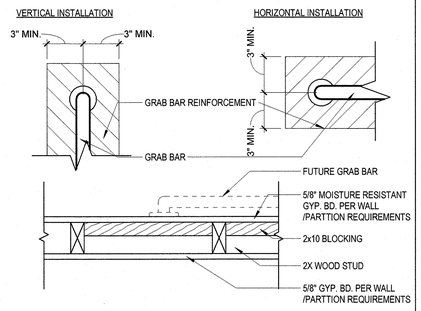

B3 BLOCKING FOR FUTURE GRAB BARS
1 1/2" = 1'-0"

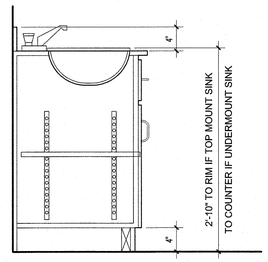

D1 BASE CABINET DETAIL AT BATH
1" = 1'-0"

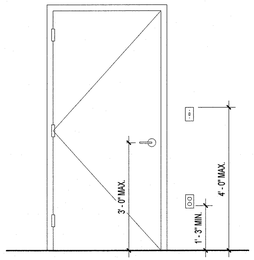

D3 TYP. FHA MOUNTING HT. REQ
1/2" = 1'-0"

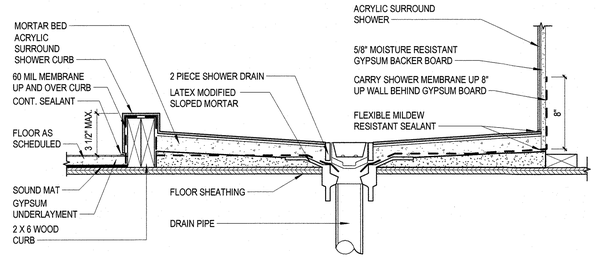

D5 SHOWER FRAMING DETAIL (WOOD)
1 1/2" = 1'-0"

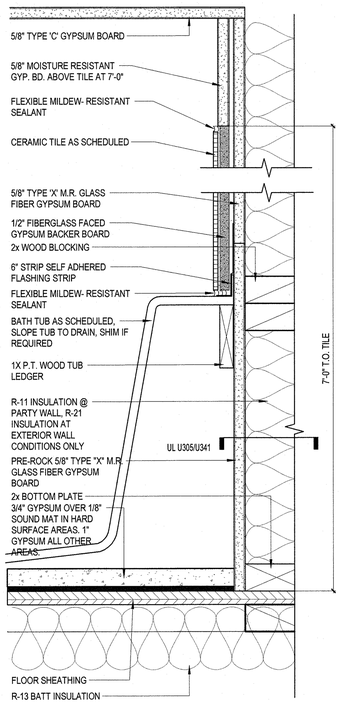

FIRE RATED CONDITION

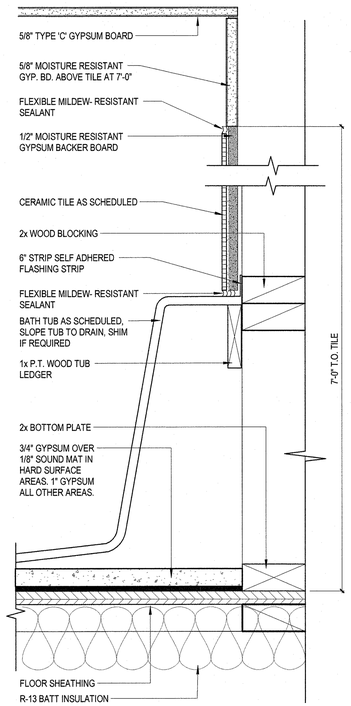

NON-FIRE RATED CONDITION

H1 BATHTUB AT FRAMED WALL
3" = 1'-0"

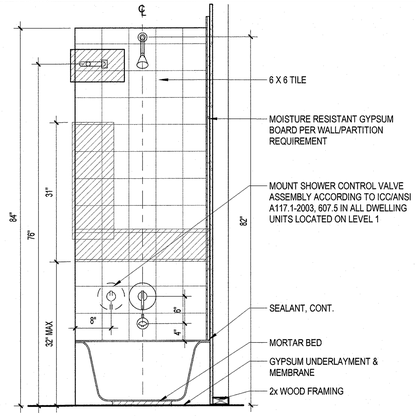

E5 STANDARD TUB DETAIL
3/4" = 1'-0"

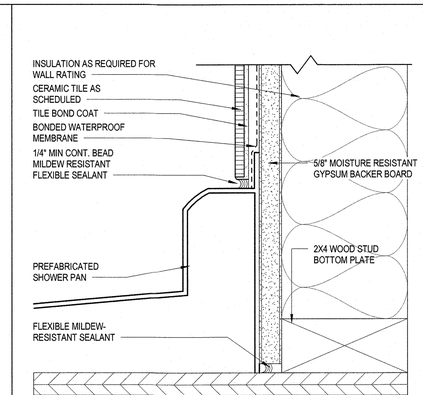

F7 SHOWER DETAIL
6" = 1'-0"

LAKE COUNTY BUILDING SERVICES
Any errors or omissions in these plans shall be made to conform with the applicable code requirements per Florida Building Code, in accordance with Section 107. Plans were reviewed for code compliance and shall be kept on job site.

NOTES:
1. HORIZONTAL BLOCKING DIMENSIONS ARE MINIMUM.
2. BLOCKING TO BE FRAMED
3. REFER TO MANUFACTURER'S INSTALLATION INSTRUCTIONS FOR ADDITIONAL BLOCKING REQUIREMENTS NOT SHOWN.

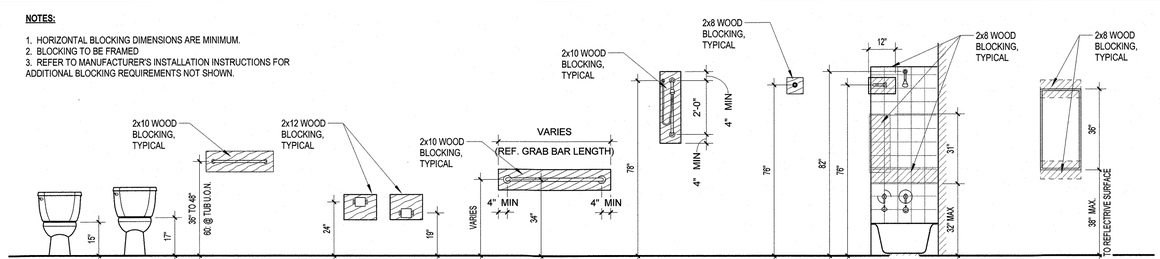

H5 BATH FIXTURE CLEAR HEIGHTS
3/8" = 1'-0"

RECEIVED FEB 1 4 2019

PERMIT REVIEW STAMP

ISSUE HISTORY

No.	Date	Description
1	02/08/2019	ISSUE FOR PERMIT

REVISION HISTORY

No.	Date	Description

© 2017 These documents and their contents are the property of FUGLEBERG KOCH, and are not to be used on any other project without the expressed written consent of Fugleberg Koch, is prohibited by law.

FUGLEBERG KOCH
2555 Temple Trail, Winter Park, FL 32789 (407) 629-0595
www.fuglebergkoch.com AA26002103
CONSULTANT

MICHAEL E. GOVE
STATE OF FLORIDA LICENSE # AR94111
02/08/2019
AR94111
REGISTERED ARCHITECT

Drawn:	DM, AW, EB
Checked:	DM
Approval:	PF
Date:	Issue Date
Project #:	5389

SUMMER BAY APTS. II
LAKE COUNTY, FL

BATH, AND LAUNDRY REQ.

A3.13

PLOTTED: 2/11/2019 2:38:36 PM

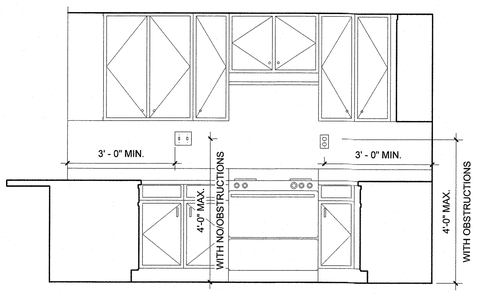

B1 TYP. FHA KITCHEN MOUNTING HT. REQ.
1/2" = 1'-0"

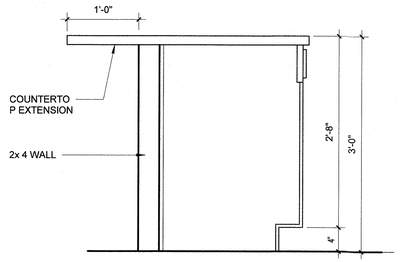

D1 COUNTERTOP DETAIL AT KITCHEN
1" = 1'-0"

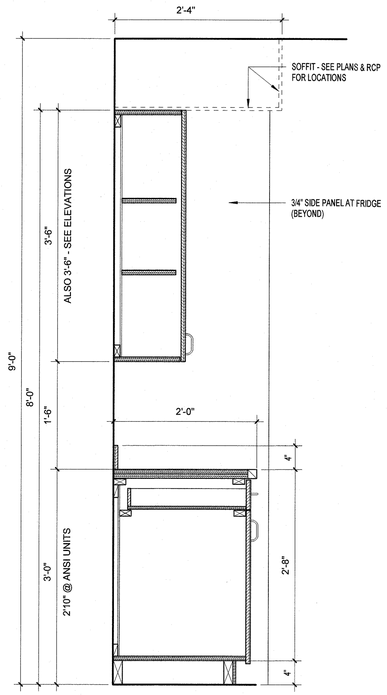

H1 KITCHEN CABINET SECTION
1" = 1'-0"

LAKE COUNTY BUILDING SERVICES
Any errors or omissions in these plans shall be made to conform with the applicable code requirements per Florida Building Code, in accordance with Section 107. Plans were reviewed for code compliance and shall be kept on job site.

RECEIVED FEB 1 4 2019

PERMIT REVIEW STAMP

ISSUE HISTORY

No.	Date	Description
1	02/08/2019	ISSUE FOR PERMIT

REVISION HISTORY

No.	Date	Description

© 2017 These documents and their contents are the property of FUGLEBERG KOCH ASSOCIATES, and are issued only for the specific project listed on these drawings. Any reproduction, revision, or modification of these documents without the expressed written consent of Fugleberg Koch, is prohibited by law.

FUGLEBERG KOCH
2555 Temple Trail, Winter Park, FL 32789 (407) 629-0595
www.fuglebergkoch.com AA26002103
CONSULTANT

MICHAEL E. GOVE
LICENSE NUMBER AR94111
STATE OF FLORIDA
MICHAEL E. GOVE
AR94111
REGISTERED ARCHITECT
02/08/2019

SUMMER BAY APTS. II
LAKE COUNTY, FL

Drawn:	Author
Checked:	Checker
Approval:	Approver
Date:	Issue Date
Project #:	5389

KITCHEN REQ.

A3.14

PLOTTED: 2/11/2019 2:38:39 PM

FINISH SCHEDULE - UNITS

MARK	SPACE DESIGNATION	FLOOR MATERIAL	BASE MATERIAL	CROWN MOLDING	WALLS								CEILING		REMARKS
					NORTH		EAST		SOUTH		WEST				
					MATERIAL	FINISH	MATERIAL	FINISH	MATERIAL	FINISH	MATERIAL	FINISH	MATERIAL	FINISH	
U-01	ENTRY	LVT	WD		GWB		PNT	PNT	GWB	PNT	GWB	PNT	GWB		
U-02	KITCHEN 1 / DINING	LVT	WD		GWB		PNT	PNT	GWB	PNT	GWB	PNT	GWB		
U-03	DINING	LVT	WD		GWB		PNT	PNT	GWB	PNT	GWB	PNT	GWB		
U-04	LIVING ROOM	LVT	WD		GWB		PNT	PNT	GWB	PNT	GWB	PNT	GWB		
U-05	BEDROOM	CPT	WD		GWB		PNT	PNT	GWB	PNT	GWB	PNT	GWB		
U-06	BATH 1	LVT	WD		GWB		PNT	PNT	GWB	PNT	GWB	PNT	GWB		
U-07	CL	LVT	WD		GWB		PNT	PNT	GWB	PNT	GWB	PNT	GWB		
U-08	LAUNDRY	LVT	WD		GWB		PNT	PNT	GWB	PNT	GWB	PNT	GWB		
U-09	PAN	LVT	WD		GWB		PNT	PNT	GWB	PNT	GWB	PNT	GWB		
U-09	PAN.	LVT	WD		GWB		PNT	PNT	GWB	PNT	GWB	PNT	GWB		
U-10	KITCHEN 2	LVT	WD		GWB		PNT	PNT	GWB	PNT	GWB	PNT	GWB		
U-11	WIC	CPT	WD		GWB		PNT	PNT	GWB	PNT	GWB	PNT	GWB		
U-12	BATH 2	LVT	WD		GWB		PNT	PNT	GWB	PNT	GWB	PNT	GWB		
U-13	SOLARIUM	LVT	WD		GWB		PNT	PNT	GWB	PNT	GWB	PNT	GWB		
U-14	BATH 3	LVT	WD		GWB		PNT	PNT	GWB	PNT	GWB	PNT	GWB		
U-15	BATH 3	LVT	WD		GWB		PNT	PNT	GWB	PNT	GWB	PNT	GWB		
U-16	BATH 4	LVT	WD		GWB		PNT	PNT	GWB	PNT	GWB	PNT	GWB		
U-17	BATH 5	LVT	WD		GWB		PNT	PNT	GWB	PNT	GWB	PNT	GWB		
U-18	BATH 6	LVT	WD		GWB		PNT	PNT	GWB	PNT	GWB	PNT	GWB		
U-19	BATH 7	LVT	WD		GWB		PNT	PNT	GWB	PNT	GWB	PNT	GWB		
U-20	HALLWAY	LVT	WD		GWB		PNT	PNT	GWB	PNT	GWB	PNT	GWB		
U-21	UTILITY	CONC	WD		GWB		PNT	PNT	GWB	PNT	GWB	PNT	GWB		
U-24	ENTRY														
U-35	MECH. ROOM														

LAKE COUNTY BUILDING SERVICES
Any errors or omissions in these plans shall be made to conform with the applicable code requirements per Florida Building Code, in accordance with Section 107. Plans were reviewed for code compliance and shall be kept on job site.

RECEIVED FEB 14 2019

PERMIT REVIEW STAMP

ISSUE HISTORY

No.	Date	Description
1	02/08/2019	ISSUE FOR PERMIT

REVISION HISTORY

No.	Date	Description

© 2017 These documents and their contents are the property of FUGLEBERG KOCH - AA26002103, and are issued only for the specific project noted on these drawings. Any reproductions, revisions, or modifications of these documents without the expressed written consent of Fugleberg Koch, is prohibited by law.

FUGLEBERG KOCH
2555 Temple Trail, Winter Park, FL 32789 (407) 629-0595
www.fuglebergkoch.com AA26002103

CONSULTANT

MICHAEL E. GOVE
FLORIDA LICENSE #AR94111
STATE OF FLORIDA
MICHAEL E. GOVE
AR94111
REGISTERED ARCHITECT
02/08/2019

SUMMER BAY APTS. II
LAKE COUNTY, FL

Drawn:	DM, AW, EB
Checked:	DM
Approval:	PF
Date:	Issue Date
Project #:	5389

FINISH SCHEDULES

A3.15

PLOTTED: 2/11/2019 2:38:57 PM

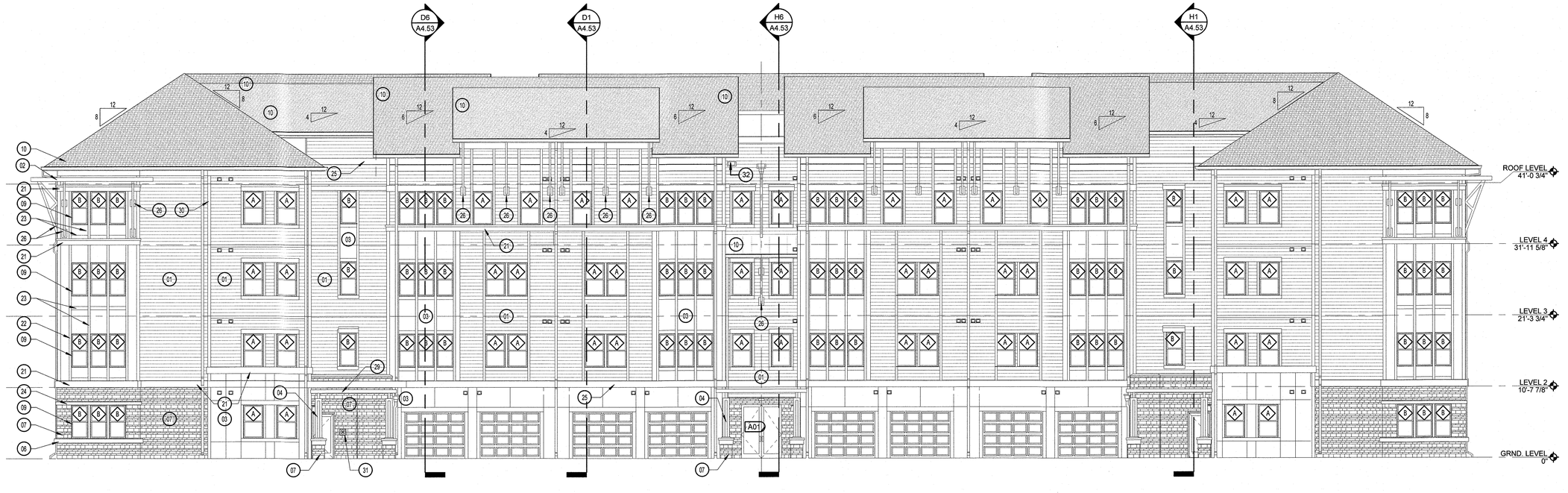

D1 BUILDING TYPE 2 - FRONT ELEVATION

1/8" = 1'-0"

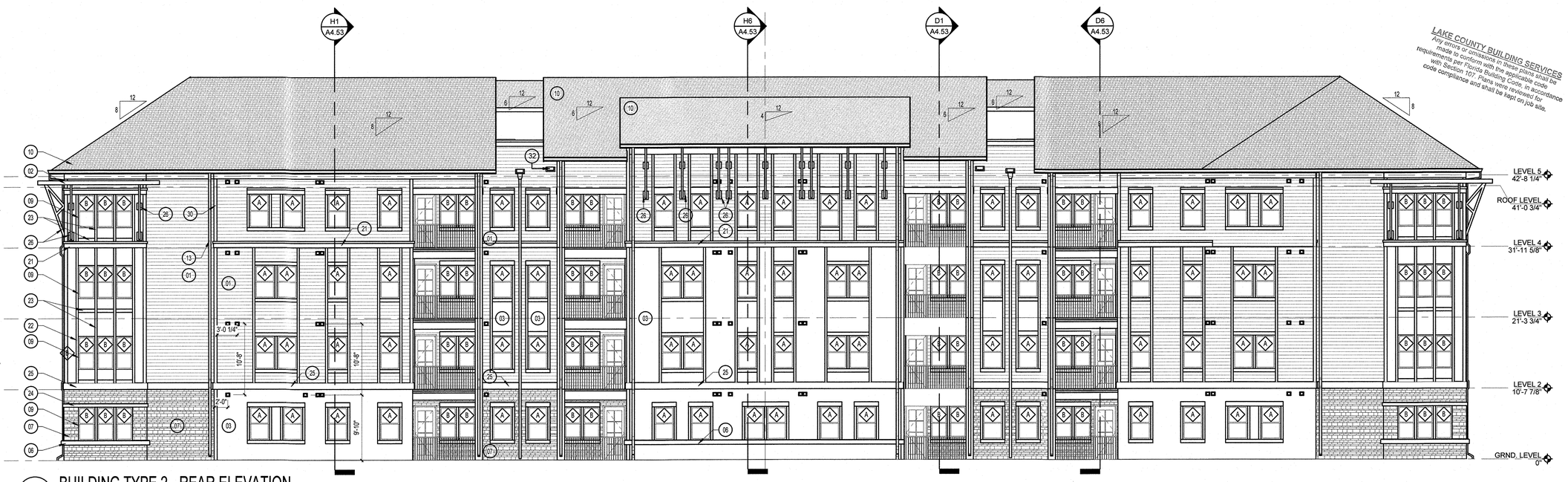

H1 BUILDING TYPE 2 - REAR ELEVATION

1/8" = 1'-0"

RECEIVED FEB 1 4 2019

ELEVATION KEY NOTES:

1. FIBER CEMENT SIDING - 6" EXPOSURE
2. ALUMINIUM CANOPY
3. FIBER CEMENT PANEL
4. FIBER CEMENT COLUMN
5. FIBER CEMENT TRIM WINDOW SILL
6. FIBER CEMENT WATER TABLE
7. STONE VENEER
8. PRECAST STONE CAP
9. VINYL WINDOW SYSTEM - SEE SCHEDULE
10. FIBERGLASS/ASPHALT ROOF SHINGLES
11. METAL FASCIA OVER WOOD SUB-FASCIA
12. ALUMINUM GUTTER
13. DOWNSPOUT
14. METAL GUARD RAIL
15. SIGNAGE/AREA - SIGNAGE DESIGN BY OTHERS - TO BE SUBMITTED LATER.
16. BUILDING FIRE SIGN - SEE A0.10. SIGN TO BE LOCATED ON FRONT OF BUILDING ONLY - SEE SITE PLAN FOR BUILDING ORIENTATION.
17. LAUNDRY / BATHROOM EXHAUST VENTS
18. ELECTRICAL METER CENTER - SEE ELECTRICAL
19. LIGHT FIXTURE - SEE ELECTRICAL.
20. FIRE DEPARTMENT CONNECTION
21. FIBER CEMENT TRIM "L"
22. 5/4 x 3 1/2 FIBER CEMENT TRIM
23. 5/4 x 5 1/2 FIBER CEMENT TRIM
24. 5/4 x 7 1/2 FIBER CEMENT TRIM
25. 5/4 x 11 1/2 FIBER CEMENT TRIM
26. DECORATIVE BRACKET "A"
27. DECORATIVE BRACKET "B"
28. DECORATIVE BRACKET "C"
29. WOOD TRELLIS
30. FIBER CEMENT CORNER TRIM
31. FIRE SIGN
32. OVERFLOW SCUPPER

PERMIT REVIEW STAMP

ISSUE HISTORY

No.	Date	Description
1	02/08/2019	ISSUE FOR PERMIT

REVISION HISTORY

No.	Date	Description

© 2017 These documents and their contents are the property of FUGLEBERG KOCH - AA26002103, and are issued only for the specific project listed on these drawings. Any reproductions, revisions, or modifications of these documents without the expressed written consent of Fugleberg Koch is prohibited by law.

FUGLEBERG KOCH
2555 Temple Trail, Winter Park, FL 32789 (407) 629-0595
www.fuglebergkoch.com AA26002103
CONSULTANT

MICHAEL E. GOVE
LICENCE NUMBER AR94111
STATE OF FLORIDA
MICHAEL E. GOVE
AR94111
REGISTERED ARCHITECT
02/08/2019

SUMMER BAY APTS. II
LAKE COUNTY, FL

Drawn:	Author
Checked:	Checker
Approval:	Approver
Date:	Issue Date
Project #:	5389

BUILDING TYPE 2 - FRONT & REAR ELEVATIONS

A4.03

PLOTTED: 2/11/2019
2:39:31 PM



D1 BUILDING TYPE 2 - LEFT ELEVATION
1/8" = 1'-0"



H1 BUILDING TYPE 2 - RIGHT ELEVATION
1/8" = 1'-0"

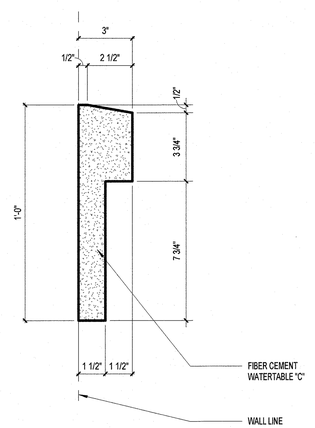

F8 FIBER CEMENT 12" TRIM "L"
3" = 1'-0"

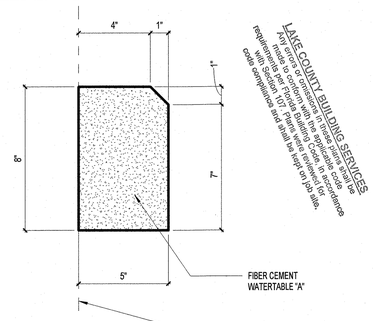

H8 FIBER CEMENT WATERTABLE TRIM "A"
3" = 1'-0"

RECEIVED FEB 14 2019

ELEVATION KEY NOTES:

1. FIBER CEMENT SIDING - 6" EXPOSURE
2. ALUMINIUM CANOPY
3. FIBER CEMENT PANEL
4. FIBER CEMENT COLUMN
5. FIBER CEMENT TRIM WINDOW SILL
6. FIBER CEMENT WATER TABLE
7. STONE VENEER
8. PRECAST STONE CAP
9. VINYL WINDOW SYSTEM - SEE SCHEDULE
10. FIBERGLASS/ASPHALT ROOF SHINGLES
11. METAL FASCIA OVER WOOD SUB-FASCIA
12. ALUMINUM GUTTER
13. DOWNSPOUT
14. METAL GUARD RAIL
15. SIGNAGE/AREA - SIGNAGE DESIGN BY OTHERS - TO BE SUBMITTED LATER.
16. BUILDING FIRE SIGN - SEE A0.10. SIGN TO BE LOCATED ON FRONT OF BUILDING ONLY - SEE SITE PLAN FOR BUILDING ORIENTATION.
17. LAUNDRY / BATHROOM EXHAUST VENTS
18. ELECTRICAL METER CENTER - SEE ELECTRICAL
19. LIGHT FIXTURE - SEE ELECTRICAL
20. FIRE DEPARTMENT CONNECTION
21. FIBER CEMENT TRIM "L"
22. 5/4 x 3 1/2 FIBER CEMENT TRIM
23. 5/4 x 5 1/2 FIBER CEMENT TRIM
24. 5/4 x 7 1/2 FIBER CEMENT TRIM
25. 5/4 x 11 1/2 FIBER CEMENT TRIM
26. DECORATIVE BRACKET "A"
27. DECORATIVE BRACKET "B"
28. DECORATIVE BRACKET "C"
29. WOOD TRELLIS
30. FIBER CEMENT CORNER TRIM
31. FIRE SIGN
32. OVERFLOW SCUPPER

PERMIT REVIEW STAMP

ISSUE HISTORY

No.	Date	Description
1	02/08/2019	ISSUE FOR PERMIT

REVISION HISTORY

No.	Date	Description

© 2017 These documents and their contents are the property of FUGLEBERG KOCH - AA26002103, and are issued only for the specific project listed on these drawings. Any reproductions, revisions, or modifications of these documents without the expressed written consent of Fugleberg Koch is prohibited by law.

FUGLEBERG KOCH
2555 Temple Trail, Winter Park, FL 32789 (407) 629-0595
www.fuglebergkoch.com AA26002103
CONSULTANT

MICHAEL E. GOVE
LICENSE NUMBER AR94111
STATE OF FLORIDA
REGISTERED ARCHITECT
02/08/2019
AR94111

LAKE COUNTY BUILDING SERVICES
Any errors or omissions in plans submitted on requires permit or compliance with applicable codes and ordinances shall be corrected when discovered, and do not relieve the owner or contractor from compliance with codes overlooked or not shown on plans. Approved plans must be kept on job site.

SUMMER BAY APTS. II
LAKE COUNTY, FL

Drawn:	Author
Checked:	Checker
Approval:	Approver
Date:	Issue Date
Project #:	5389

BUILDING TYPE 2 - RIGHT & LEFT ELEVATIONS

A4.04

PLOTTED: 2/11/2019 2:40:01 PM

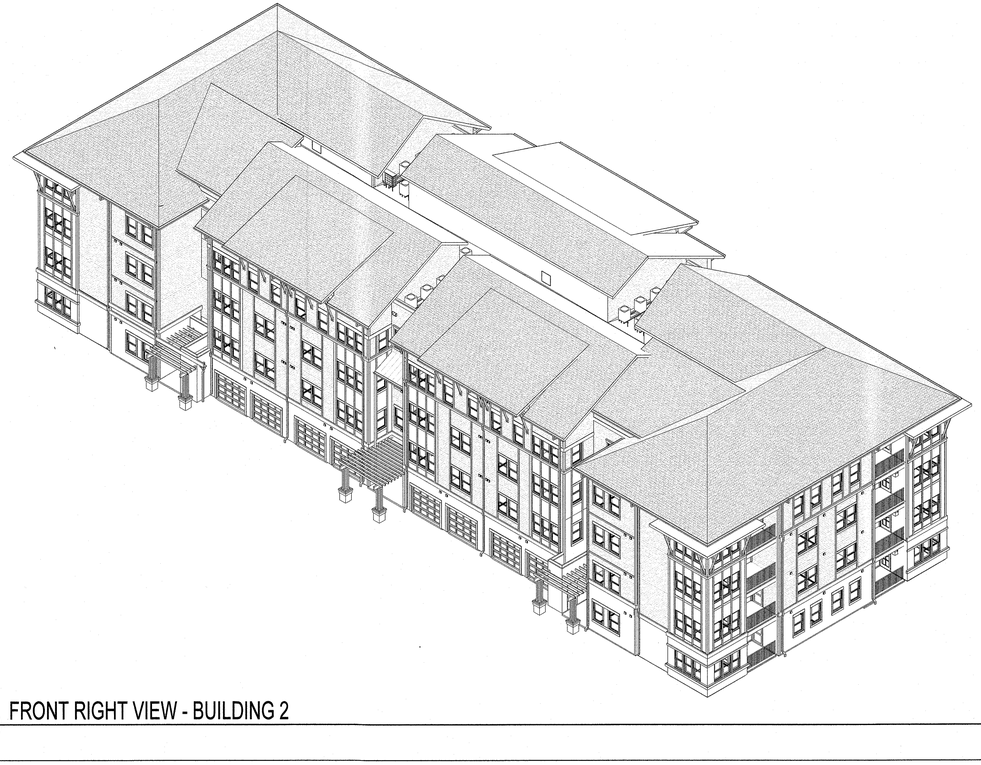

D1 FRONT RIGHT VIEW - BUILDING 2

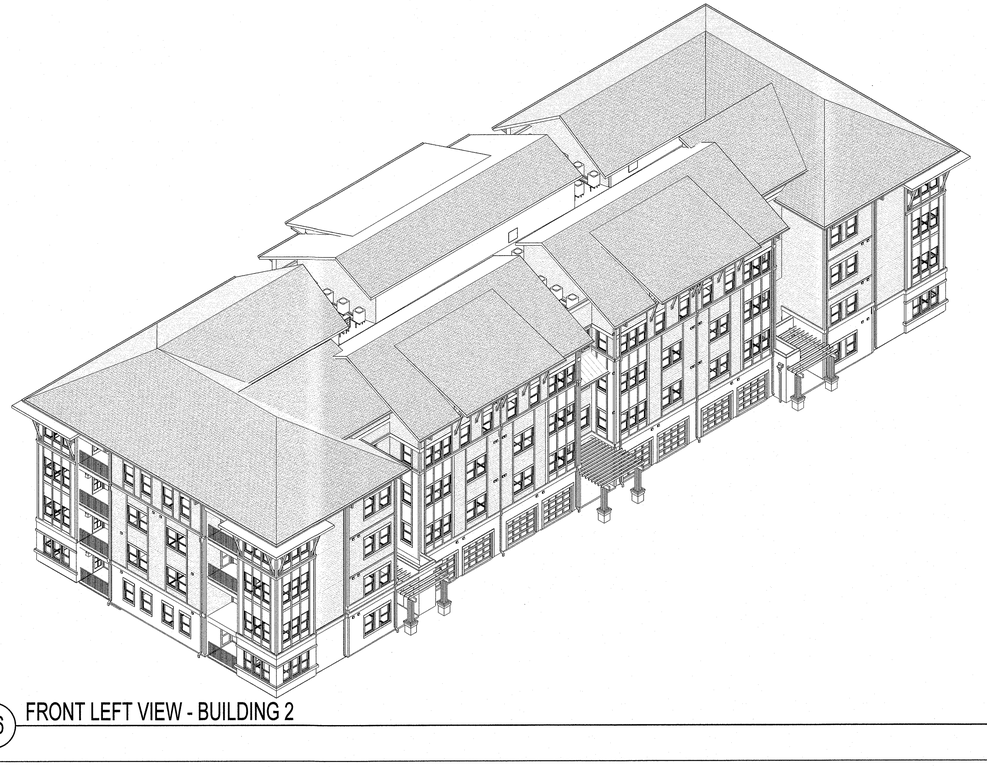

D6 FRONT LEFT VIEW - BUILDING 2

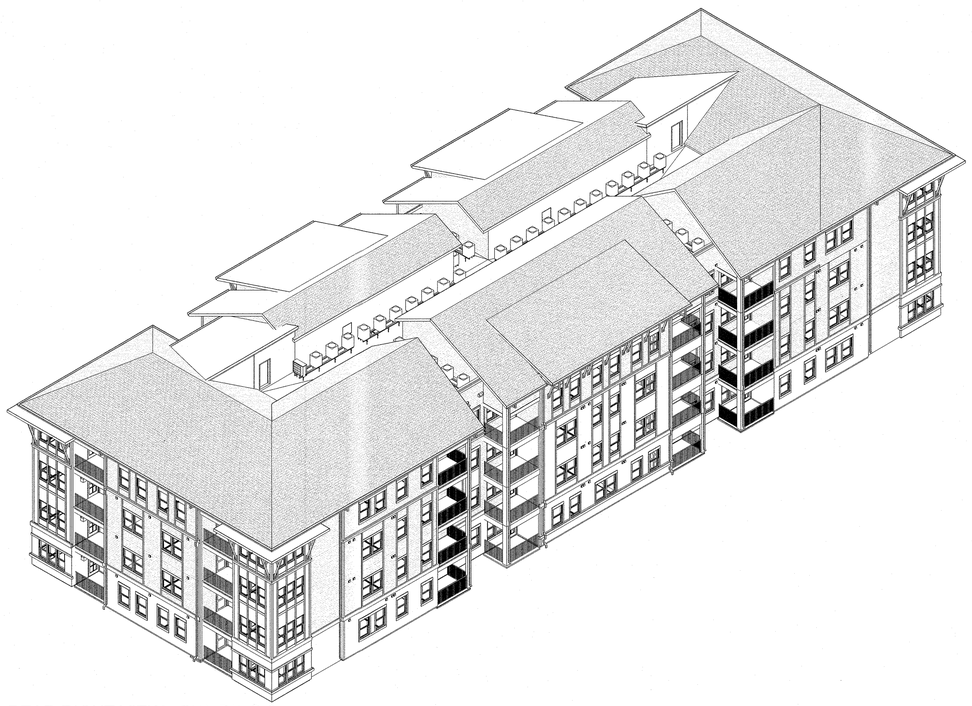

H1 REAR RIGHT VIEW - BUILDING 2

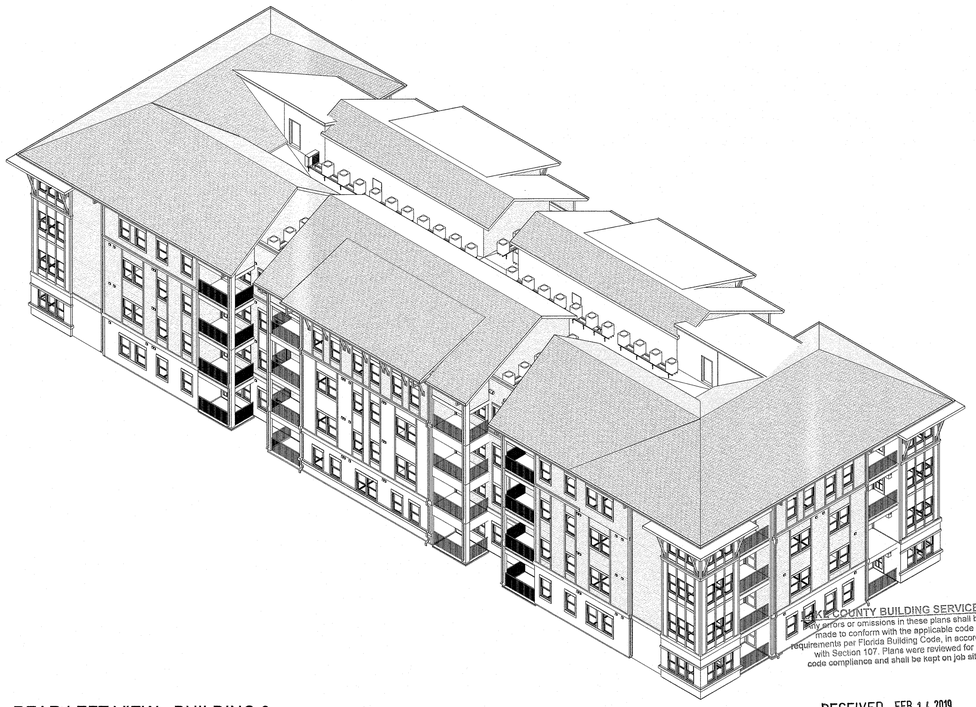

H6 REAR LEFT VIEW - BUILDING 2

LAKE COUNTY BUILDING SERVICES
Any errors or omissions in these plans shall be made to conform with the applicable code requirements per Florida Building Code, in accordance with Section 107. Plans were reviewed for code compliance and shall be kept on job site.

RECEIVED FEB 14 2019

PERMIT REVIEW STAMP

ISSUE HISTORY

No.	Date	Description
1	02/08/2019	ISSUE FOR PERMIT

REVISION HISTORY

No.	Date	Description

© 2017 These documents are the property of FUGLEBERG KOCH - AA26002103, and are issued only for the specific project noted on these drawings. Any reproductions, revisions, or modifications of these documents without the expressed written consent of Fugleberg Koch, is prohibited by law.

FUGLEBERG KOCH
2555 Temple Trail, Winter Park, FL 32789 (407) 629-0595
www.fuglebergkoch.com AA26002103
CONSULTANT

MICHAEL E. GOVE
REGISTERED ARCHITECT
STATE OF FLORIDA
AR94111
02/08/2019

SUMMER BAY APTS. II
LAKE COUNTY, FL

Drawn:	Author
Checked:	Checker
Approved:	Approver
Date:	Issue Date
Project #:	5389

BUILDING TYPE 2 - AXONOMETRICS

A4.12

PLOTTED: 2/11/2019 2:41:15 PM

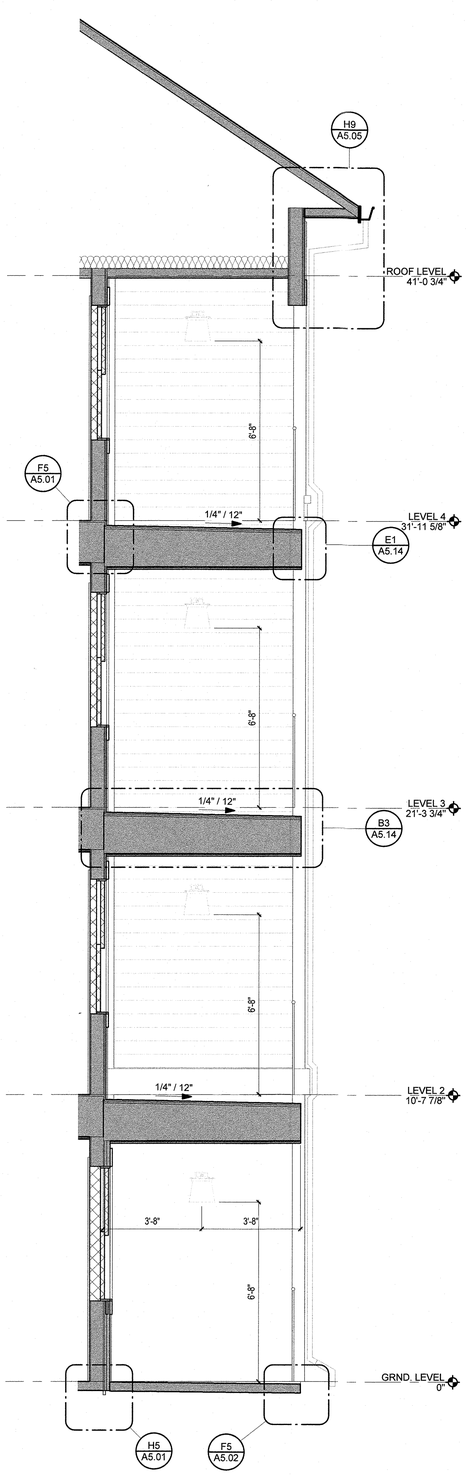

H1 BALCONY TYPE 1 - SECTION
3/8" = 1'-0" H1/ A2.01

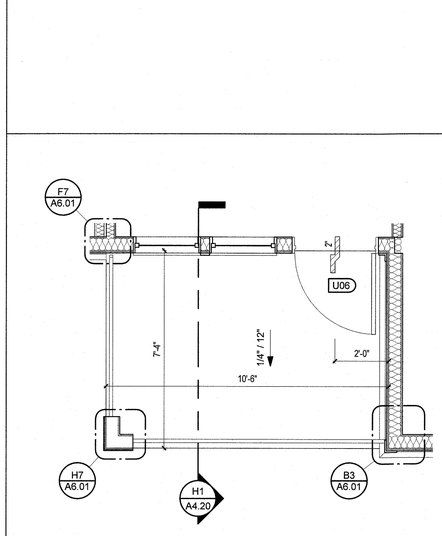

F3 BALCONY TYPE 1
3/8" = 1'-0"

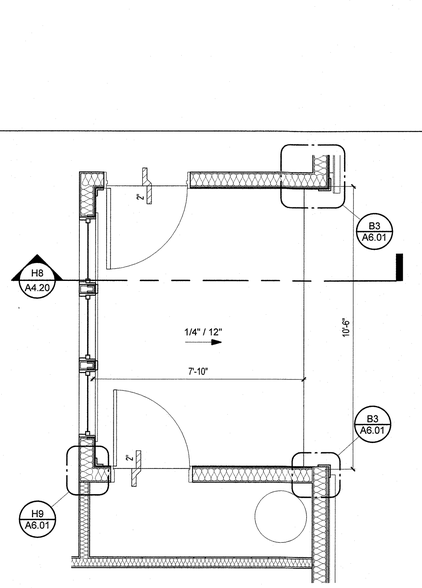

F6 BALCONY TYPE 2
3/8" = 1'-0"

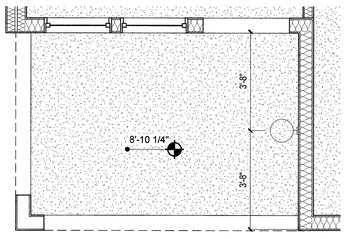

H3 BALCONY TYPE 1 - RCP
3/8" = 1'-0"

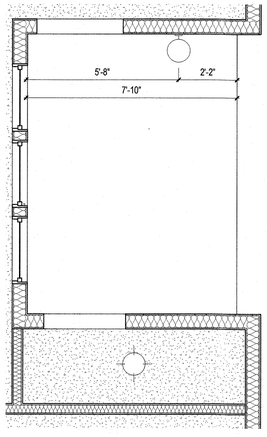

H6 BALCONY TYPE 2 - RCP
3/8" = 1'-0"

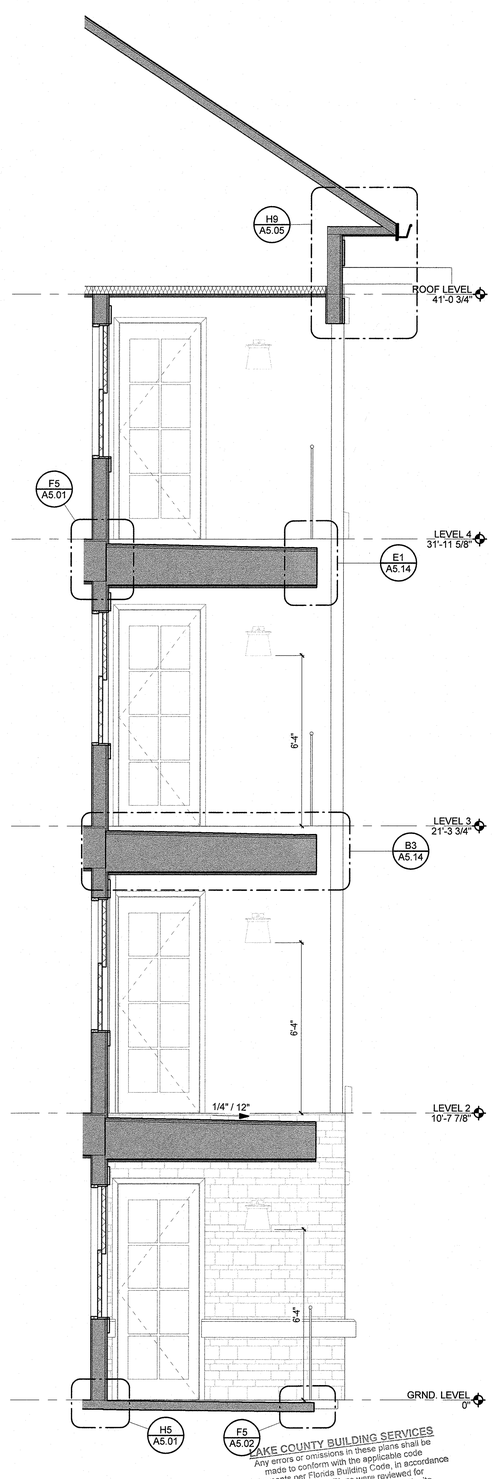

H8 BALCONY TYPE 2 - SECTION
3/8" = 1'-0" H1/ A2.01

LAKE COUNTY BUILDING SERVICES
Any errors or omissions in these plans shall be made to conform with the applicable code requirements per Florida Building Code, in accordance with Section 107. Plans were reviewed for code compliance and shall be kept on job site.

RECEIVED FEB 1 & 2019

RCP LEGEND

NOTE: RCP DIMS ARE FROM FINISH FACE OF WALL

- EXIT LIGHT
- LED LIGHT W/ ROUND BOX
- CEILING MOUNTED LIGHT
- EXTERIOR CEILING MOUNTED LIGHT
- PENDANT LIGHT
- SPRINKLER HEAD - CEILING MOUNTED
- SPRINKLER HEAD - SIDEWALL
- EMERGENCY LIGHT - SIDEWALL
- FLORESCENT STRIP LIGHT
- CEILING FAN
- FIXTURE VANITY LIGHT - WALL MOUNTED
- EXTERIOR LIGHT - WALL MOUNTED
- EXHAUST FAN - CEILING MOUNTED
- SQUARE SUPPLY DIFFUSER - CEILING MOUNTED
- SQUARE RETURN DIFFUSER - CEILING MOUNTED
- SUPPLY DIFFUSER - WALL MOUNTED
- EXHAUST FAN - WALL MOUNTED
- THRU-WALL GRILL
- ATTIC ACCESS PANEL
- 5/8" FR GYP BD CEILING ON RESILIENT CHANNEL - 9'-0" AFF U.N.O.

PERMIT REVIEW STAMP

ISSUE HISTORY

No.	Date	Description
1	02/08/2019	ISSUE FOR PERMIT

REVISION HISTORY

No.	Date	Description

© 2017 These documents and their contents are the property of FUGLEBERG KOCH, and are issued only for the specific project shown on these drawings. Any reproductions, revisions, or modifications of these documents without the expressed written consent of Fuglegerg Koch, is prohibited by law.

FUGLEBERG KOCH
2555 Temple Trail, Winter Park, FL 32789 (407) 629-0595
www.fuglebergkoch.com AA26002103
CONSULTANT

MICHAEL E GOVE
FLORIDA LICENSE # AR94111
STATE OF FLORIDA
MICHAEL E. GOVE
AR94111
REGISTERED ARCHITECT
02/08/2019

SUMMER BAY APTS. II
LAKE COUNTY, FL

Drawn:	Author
Checked:	Checker
Approved:	Approver
Date:	Issue Date
Project #:	5389

BALCONY - PLANS AND ELEVATIONS

A4.20

PLOTTED: 2/11/2019 2:42:19 PM

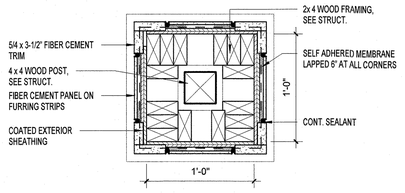

B1 COLUMN AT TRELLIS - TOP / BOTTOM - PANEL
1 1/2" = 1'-0"

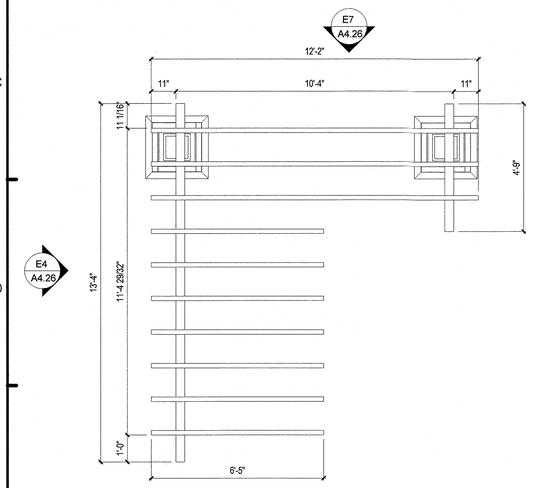

E1 ENLARGED TRELLIS II FLOOR PLAN
3/8" = 1'-0"

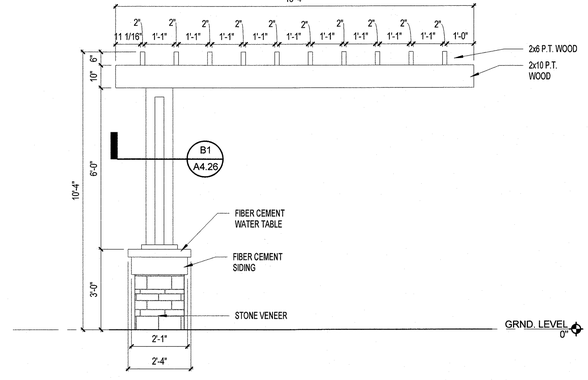

E4 SIDE VIEW @ TRELLIS II
3/8" = 1'-0"

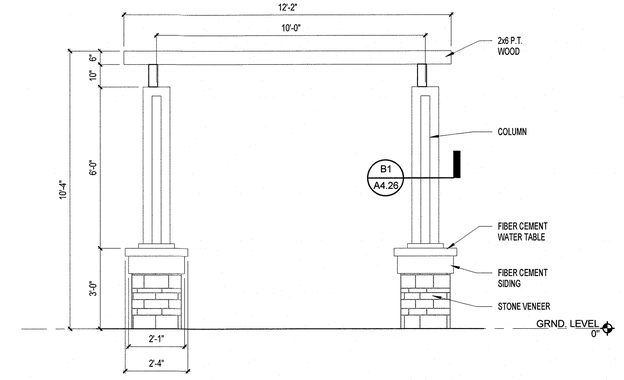

E7 FRONT VIEW @ TRELLIS II
3/8" = 1'-0"

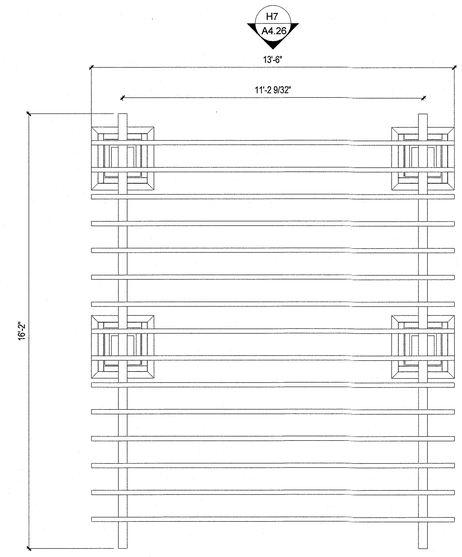

H1 ENLARGED TRELLIS I FLOOR PLAN
3/8" = 1'-0"

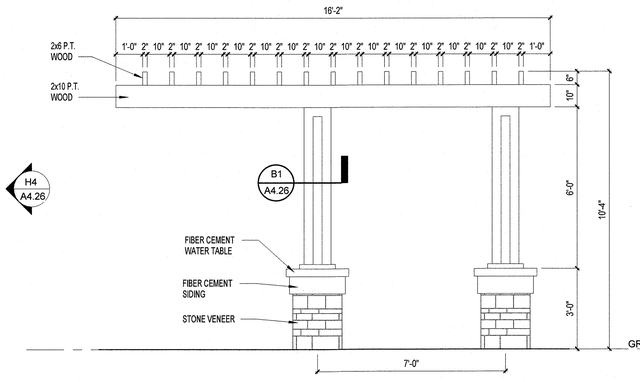

H4 SIDE VIEW @ TRELLIS I
3/8" = 1'-0"

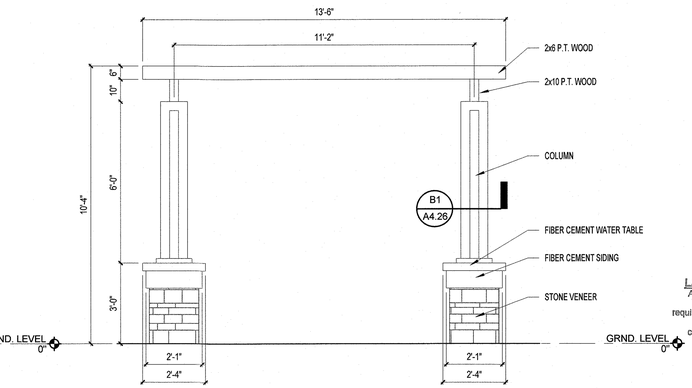

H7 FRONT VIEW @ TRELLIS I
3/8" = 1'-0"

LAKE COUNTY BUILDING SERVICES
Any errors or omissions in these plans shall be made to conform with the applicable code requirements per Florida Building Code, in accordance with Section 107. Plans were reviewed for code compliance and shall be kept on job site.

RECEIVED FEB 14 2019

PERMIT REVIEW STAMP

ISSUE HISTORY

No.	Date	Description
1	02/08/2019	ISSUE FOR PERMIT

REVISION HISTORY

No.	Date	Description

FUGLEBERG KOCH
2555 Temple Trail, Winter Park, FL 32789 (407) 629-0595
www.fuglebergkoch.com AA26002103

CONSULTANT

MICHAEL E. GOVE
FLORIDA LICENSE # AR94111
STATE OF FLORIDA
MICHAEL E. GOVE
AR94111
REGISTERED ARCHITECT
02/08/2019

SUMMER BAY APTS. II
LAKE COUNTY, FL

Drawn:	Author
Checked:	Checker
Approval:	Approver
Date:	Issue Date
Project #:	5389

TRELLIS DETAILS

A4.26

PLOTTED: 2/11/2019 2:42:50 PM

© 2017 These documents and their contents are the property of FUGLEBERG KOCH - AA26002103, and are issued only for the specific project noted on these drawings. Any reproductions, revisions, or modifications of these documents without the expressed written consent of Fugleberg Koch, is prohibited by law.

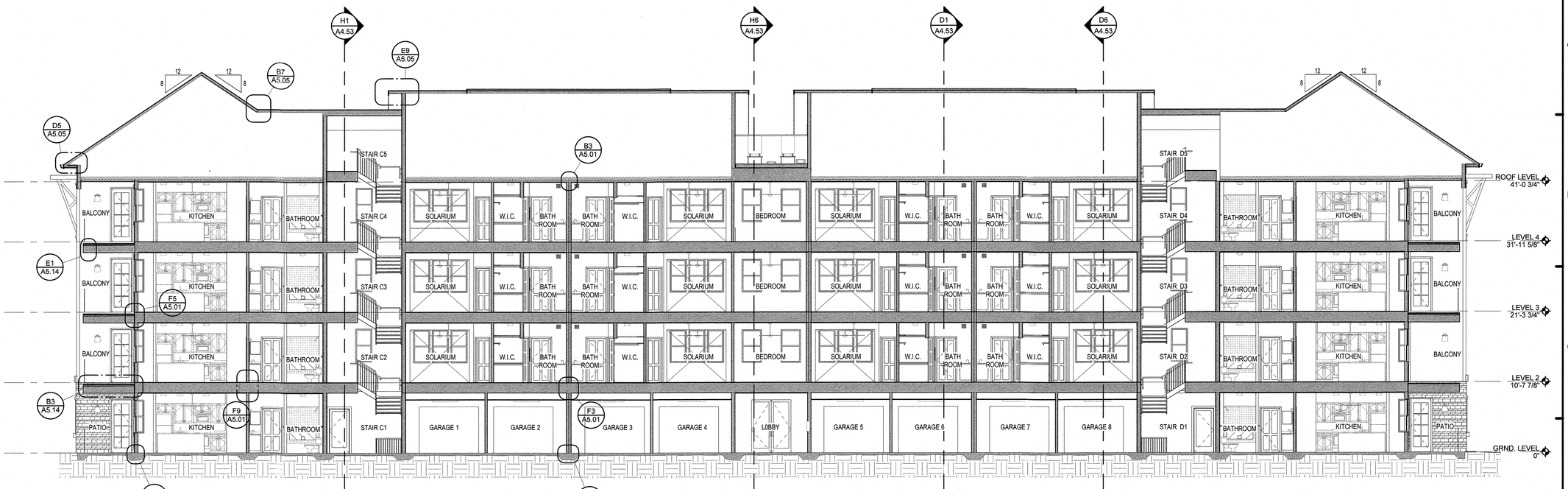

D1 BUILDING TYPE 2 - SECTION 2

1/8" = 1'-0"

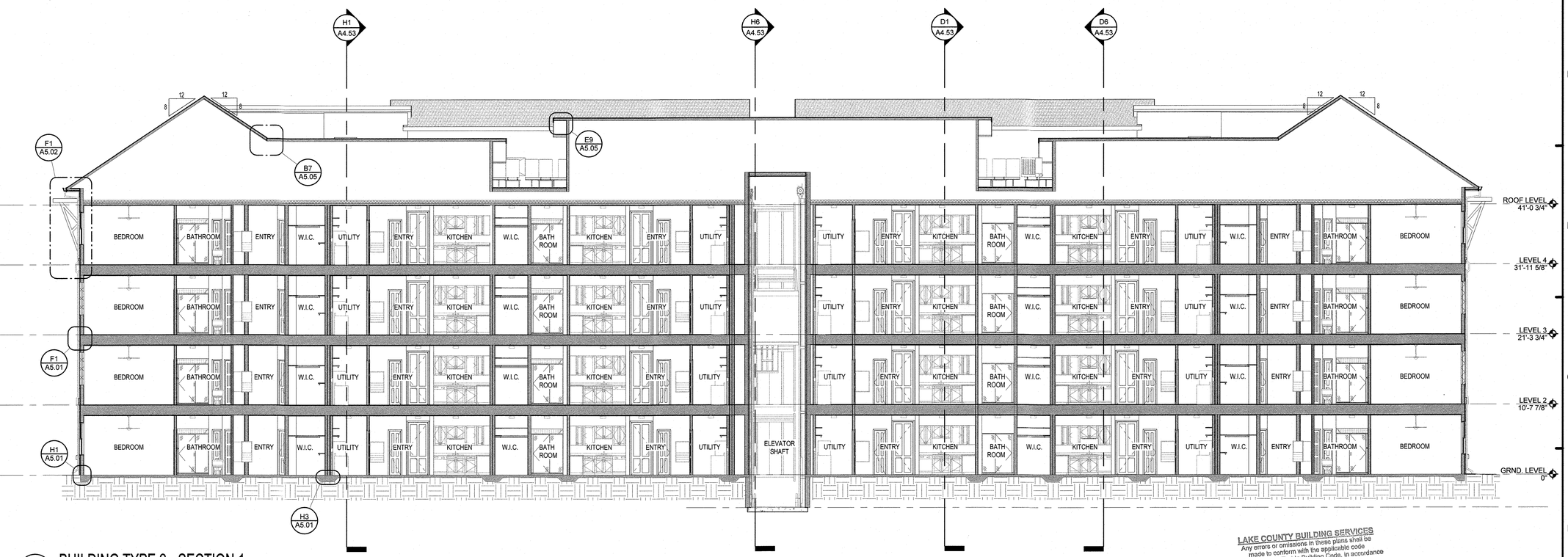

H1 BUILDING TYPE 2 - SECTION 1

1/8" = 1'-0"

LAKE COUNTY BUILDING SERVICES
Any errors or omissions in these plans shall be made to conform with the applicable code requirements per Florida Building Code, in accordance with Section 107. Plans were reviewed for code compliance and shall be kept on job site.

RECEIVED FEB 14 2019

ELEVATION KEY NOTES:

1. FIBER CEMENT SIDING - 6" EXPOSURE
2. ALUMINUM CANOPY
3. FIBER CEMENT PANEL
4. FIBER CEMENT COLUMN
5. FIBER CEMENT TRIM WINDOW SILL
6. FIBER CEMENT WATER TABLE
7. STONE VENEER
8. PRECAST STONE CAP
9. VINYL WINDOW SYSTEM - SEE SCHEDULE
10. FIBERGLASS/ASPHALT ROOF SHINGLES
11. METAL FASCIA OVER WOOD SUB-FASCIA
12. ALUMINUM GUTTER
13. DOWNSPOUT
14. METAL GUARD RAIL
15. SIGNAGE/AREA - SIGNAGE DESIGN BY OTHERS - TO BE SUBMITTED LATER.
16. BUILDING FIRE SIGN - SEE A0.10. SIGN TO BE LOCATED ON FRONT OF BUILDING ONLY - SEE SITE PLAN FOR BUILDING ORIENTATION.
17. LAUNDRY / BATHROOM EXHAUST VENTS
18. ELECTRICAL METER CENTER - SEE ELECTRICAL
19. LIGHT FIXTURE - SEE ELECTRICAL.
20. FIRE DEPARTMENT CONNECTION
21. FIBER CEMENT TRIM "L"
22. 5/4 x 3 1/2 FIBER CEMENT TRIM
23. 5/4 x 5 1/2 FIBER CEMENT TRIM
24. 5/4 x 7 1/2 FIBER CEMENT TRIM
25. 5/4 x 11 1/2 FIBER CEMENT TRIM
26. DECORATIVE BRACKET "A"
27. DECORATIVE BRACKET "B"
28. DECORATIVE BRACKET "C"
29. WOOD TRELLIS
30. FIBER CEMENT CORNER TRIM
31. FIRE SIGN
32. OVERFLOW SCUPPER

PERMIT REVIEW STAMP

ISSUE HISTORY

No.	Date	Description
1	02/08/2019	ISSUE FOR PERMIT

REVISION HISTORY

No.	Date	Description

© 2017 These documents and their contents are the property of FUGLEBERG KOCH - AA26002103, and are issued only for the specific project noted on these drawings. Any reproduction, revision or modification of these documents without the expressed written consent of Fugleberg Koch is prohibited by law.

FUGLEBERG KOCH
2555 Temple Trail, Winter Park, FL 32789 (407) 629-0595
www.fuglebergkoch.com AA26002103
CONSULTANT

MICHAEL E. GOVE
FLORIDA LICENSE # AR94111
STATE OF FLORIDA
MICHAEL E. GOVE
REGISTERED ARCHITECT
AR94111

SUMMER BAY APTS. II
LAKE COUNTY, FL

Drawn:	Author
Checked:	Checker
Approved:	Approver
Date:	Issue Date
Project #:	5389

BUILDING TYPE 2 - SECTIONS

A4.52

PLOTTED: 2/11/2019 2:43:23 PM

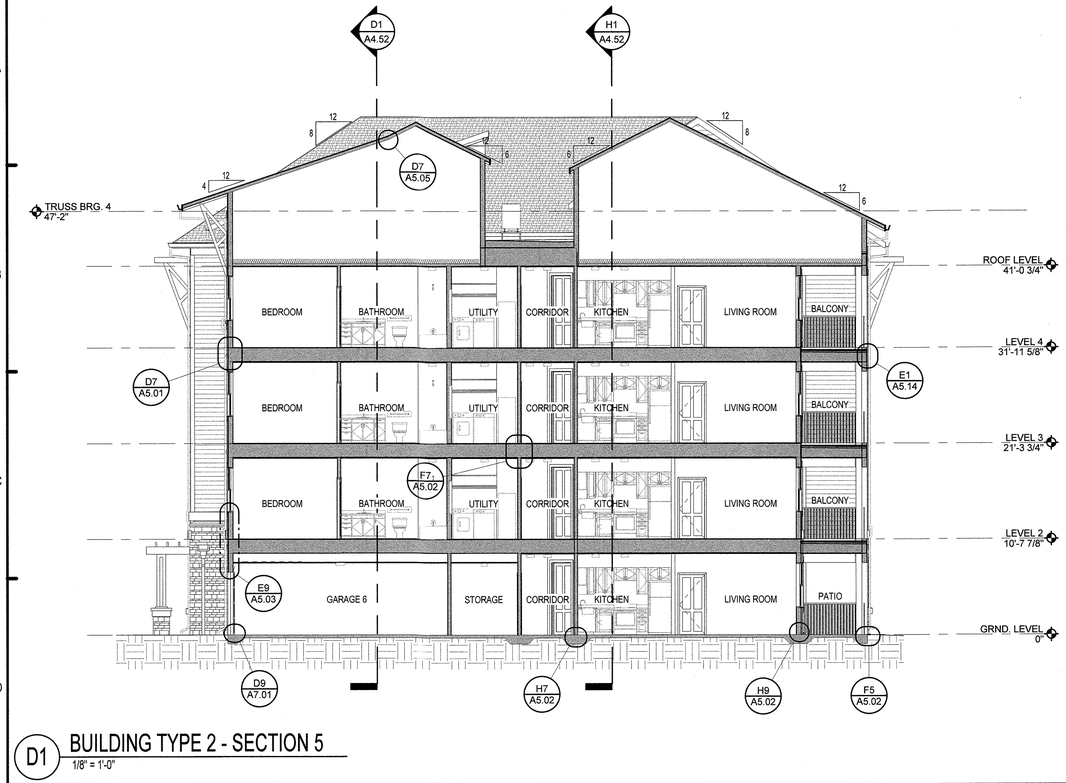

D1 BUILDING TYPE 2 - SECTION 5
1/8" = 1'-0"

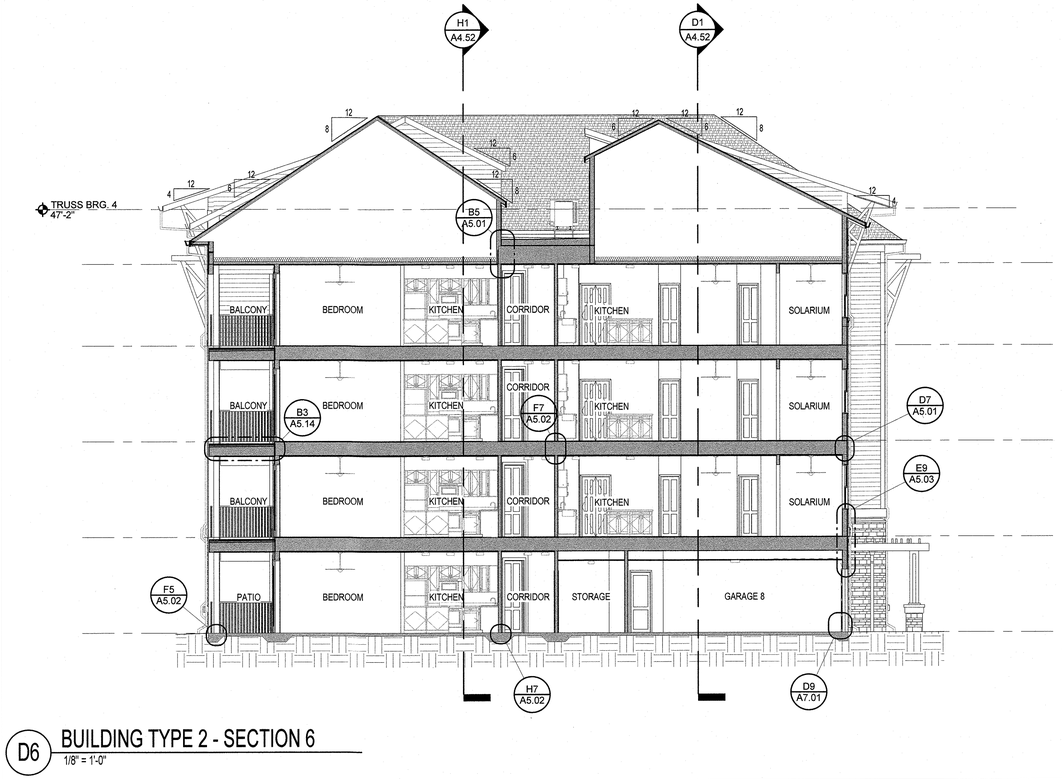

D6 BUILDING TYPE 2 - SECTION 6
1/8" = 1'-0"

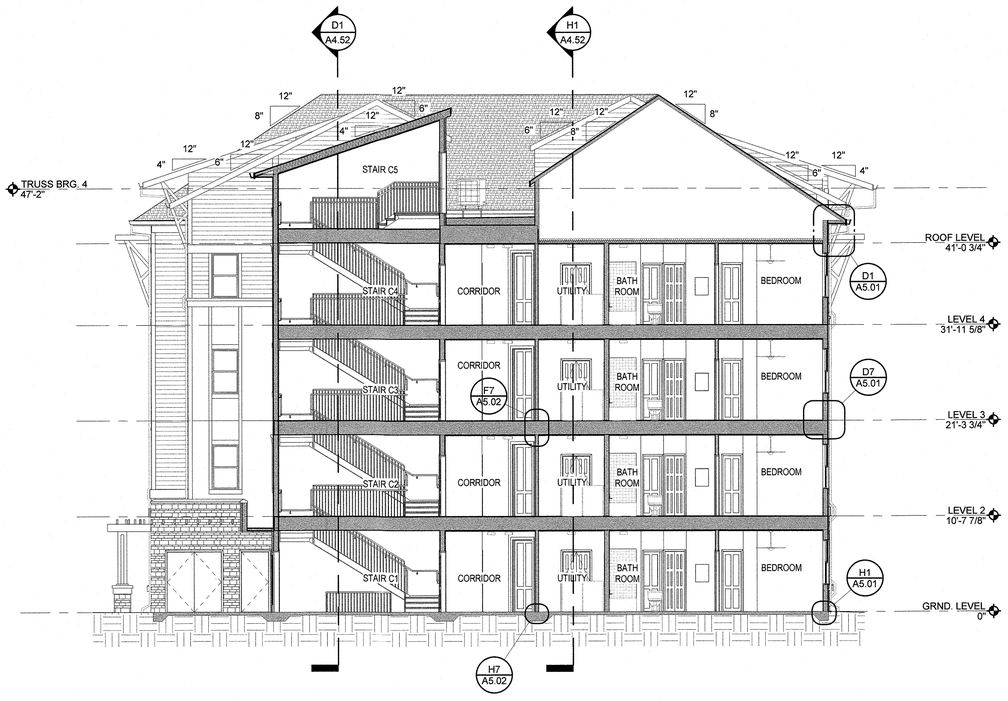

H1 BUILDING TYPE 2 - SECTION 3
1/8" = 1'-0"

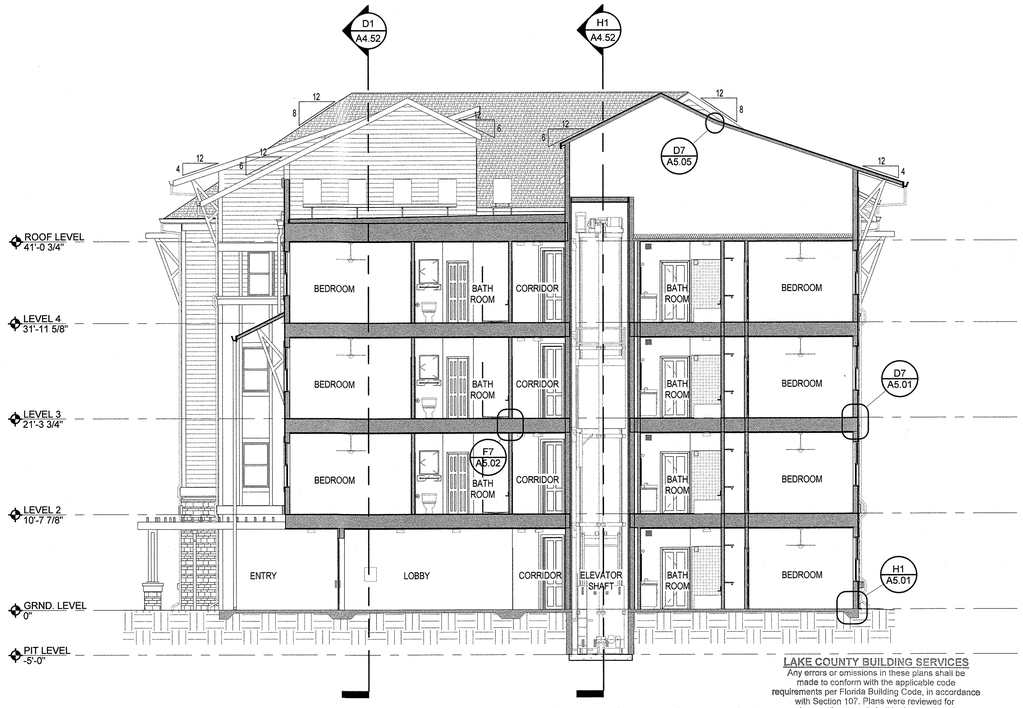

H6 ENLARGE ENTRY ELEV. 4 - BUILDING TYPE 2
1/8" = 1'-0"

LAKE COUNTY BUILDING SERVICES
Any errors or omissions in these plans shall be made to conform with the applicable code requirements per Florida Building Code, in accordance with Section 107. Plans were reviewed for code compliance and shall be kept on job site.

RECEIVED FEB 14 2019

PERMIT REVIEW STAMP

ISSUE HISTORY

No.	Date	Description
1	02/08/2019	ISSUE FOR PERMIT

REVISION HISTORY

No.	Date	Description

© 2017 These documents and their contents are the property of FUGLEBERG KOCH ARCHITECTS, INC. and are copyrighted by the author. Reproduction or publication of these documents without the expressed written consent of Fugleberg Koch is prohibited by law.

FUGLEBERG KOCH
2555 Temple Trail, Winter Park, FL 32789 (407) 629-0595
www.fuglebergkoch.com AA26002103
CONSULTANT

MICHAEL E. GOVE
REGISTERED ARCHITECT AR94111
STATE OF FLORIDA
MICHAEL E. GOVE
AR94111
REGISTERED ARCHITECT
02/08/2019

SUMMER BAY APTS. II
LAKE COUNTY, FL

Drawn:	Author
Checked:	Checker
Approved:	Approver
Date:	Issue Date
Project #:	5389

BUILDING TYPE 2 - SECTIONS

A4.53

PLOTTED: 2/11/2019 2:44:21 PM

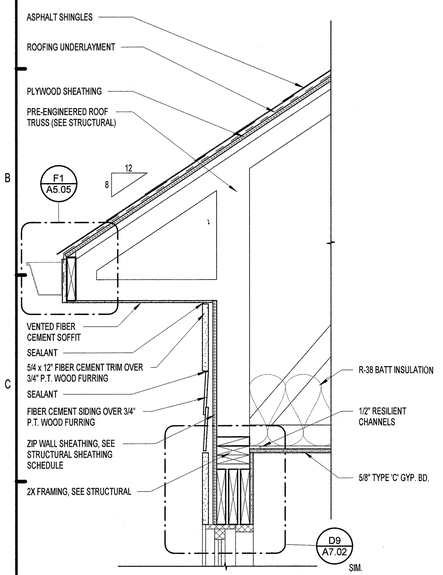

D1 EXT. WALL @ ROOF
1" = 1'-0" H1/ A4.51

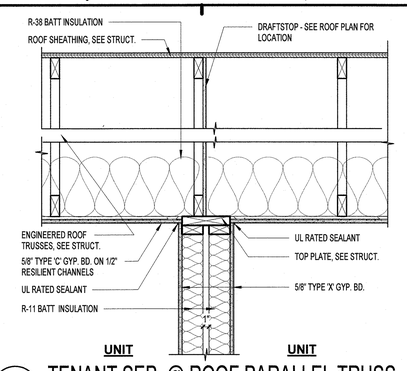

B3 TENANT SEP. @ ROOF PARALLEL TRUSS
1" = 1'-0" D1/ A4.50

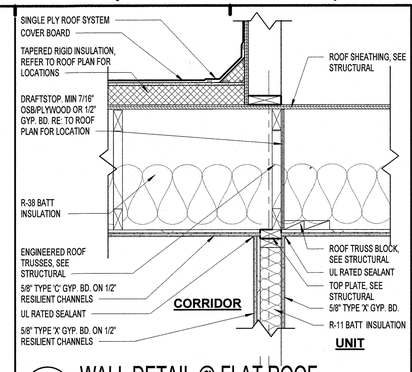

B5 WALL DETAIL @ FLAT ROOF
1" = 1'-0" D6/ A4.53

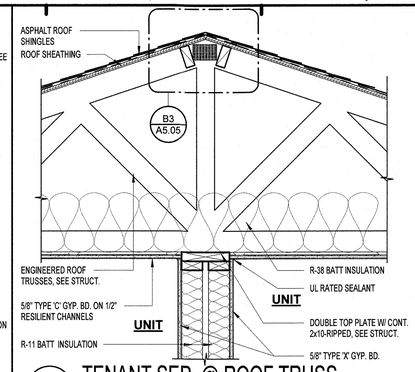

B7 TENANT SEP. @ ROOF TRUSS
1" = 1'-0"

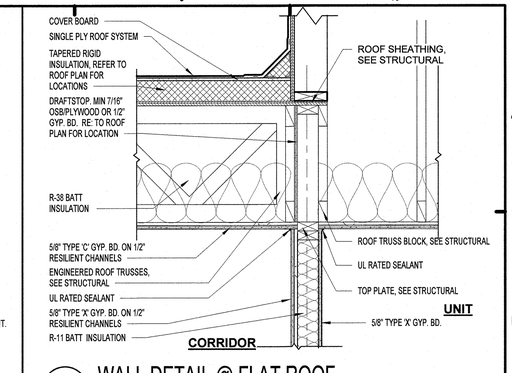

B9 WALL DETAIL @ FLAT ROOF
1" = 1'-0" H1/ A2.05

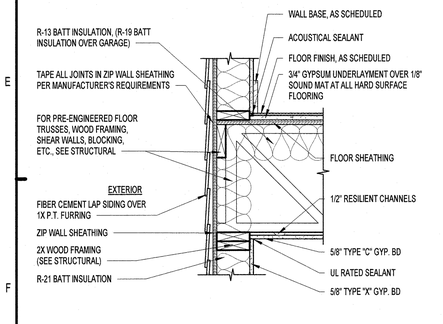

F1 EXT. WALL DETAIL - SIDING (PERP.)
1" = 1'-0" H1/ A4.50

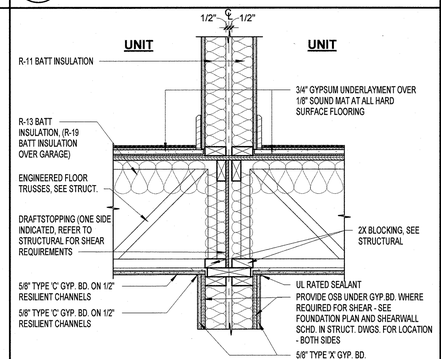

F3 TENANT SEP. @ TYP. FLOOR (PERP)
1" = 1'-0" D1/ A4.50

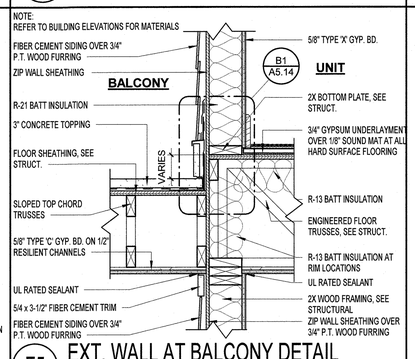

F5 EXT. WALL AT BALCONY DETAIL
1" = 1'-0" H1/ A4.20

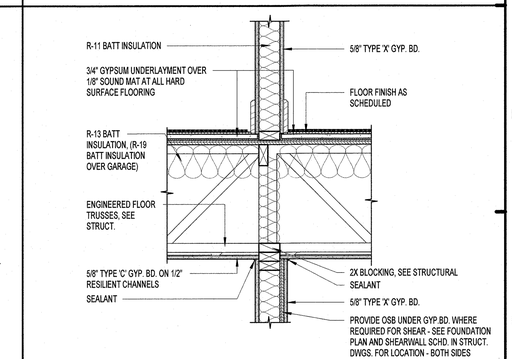

F9 INTERIOR BEARING WALL @ TYP. FLOOR
1" = 1'-0" D1/ A4.50

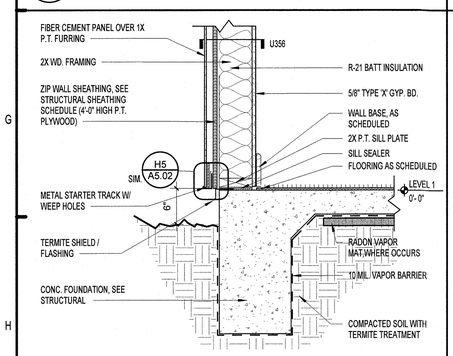

H1 EXTERIOR PANEL WALL @ 1ST LEVEL
1" = 1'-0" H1/ A4.50

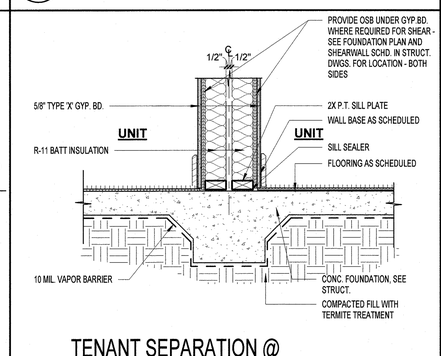

TENANT SEPARATION @ FOUNDATION
1" = 1'-0" D1/ A4.50

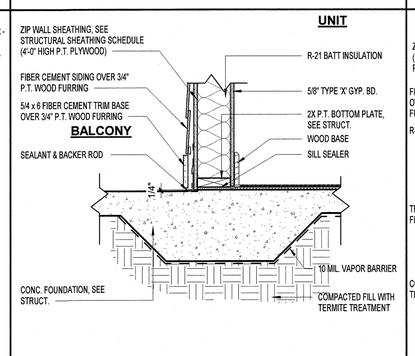

H5 PATIO WALL SECTION @ 1ST LEVEL
1" = 1'-0" H1/ A4.20

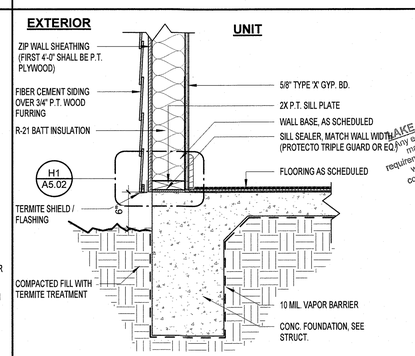

H7 EXT. WALL DETAIL - SIDING
1" = 1'-0"

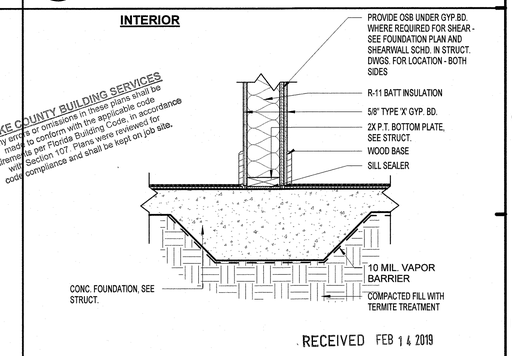

H9 INT. WALL SECTION @ 1ST LEVEL
1" = 1'-0" H1/ A2.42

LAKE COUNTY BUILDING SERVICES
Any errors or omissions in these plans shall be the responsibility of the applicable code requirements to conform with the applicable codes per Florida Building Code, in accordance with Section 107. Plans are reviewed for code compliance and shall be kept on job site.

RECEIVED FEB 14 2019

PERMIT REVIEW STAMP

ISSUE HISTORY

No.	Date	Description
1	02/08/2019	ISSUE FOR PERMIT

REVISION HISTORY

No.	Date	Description

© 2017 These documents and their contents are the property of FUGLEBERG KOCH. ARCHITECTURE, INC. and are issued only for the specific project listed on these drawings. Any reproduction, modification or distribution of these documents without the expressed written consent of Fuglerberg Koch is prohibited by law.

FUGLEBERG KOCH
2555 Temple Trail, Winter Park, FL 32789 (407) 629-0595
www.fuglebergkoch.com AA26002103
CONSULTANT

MICHAEL E. GOVE
LICENSED FLORIDA ARCHITECT AR94111
STATE OF FLORIDA
MICHAEL E. GOVE
AR94111
REGISTERED ARCHITECT
02/08/2019

SUMMER BAY APTS. II
LAKE COUNTY, FL

Drawn:	KP
Checked:	KL
Approval:	KL
Date:	Issue Date
Project #:	5389

WALL SECTION DETAILS

A5.01

PLOTTED: 2/11/2019 2:44:28 PM

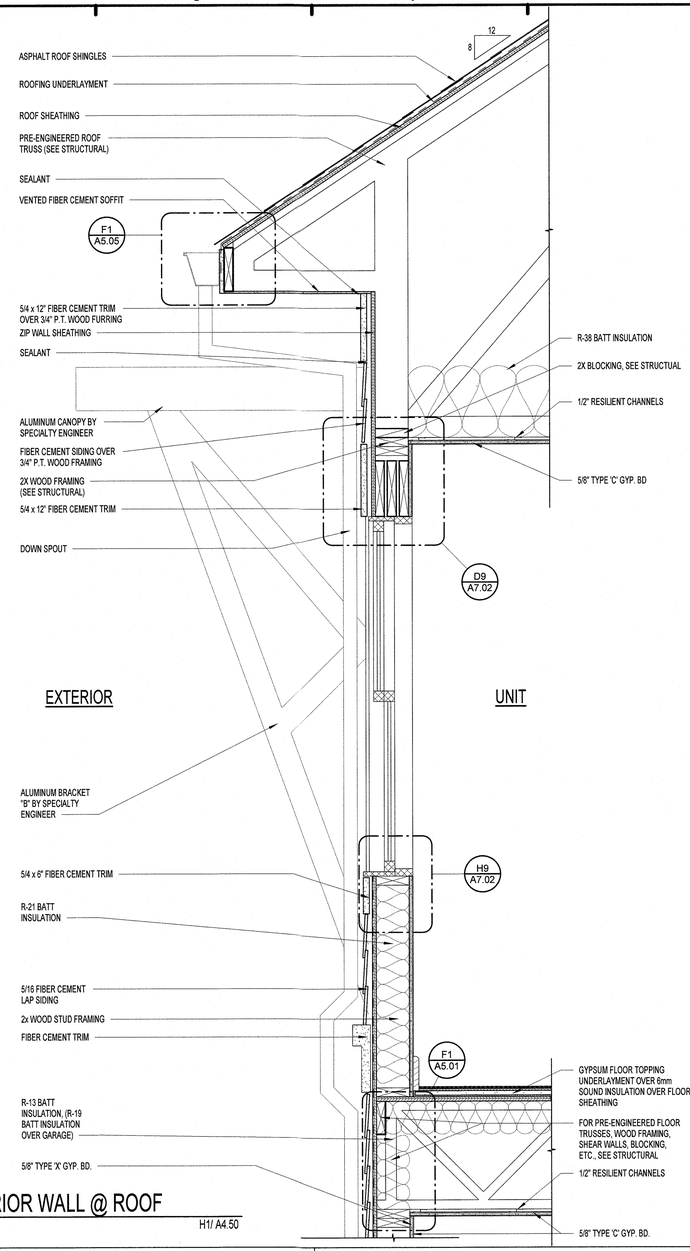

F1 EXTERIOR WALL @ ROOF
1" = 1'-0" H1/ A4.50

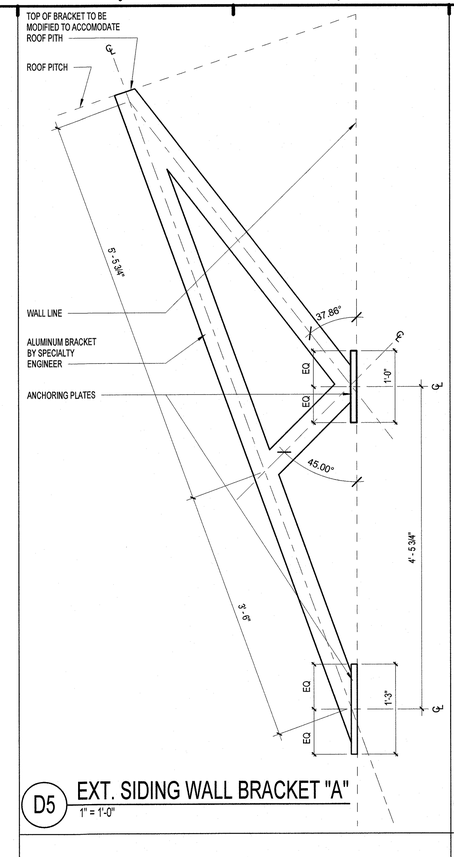

D5 EXT. SIDING WALL BRACKET "A"
1" = 1'-0"

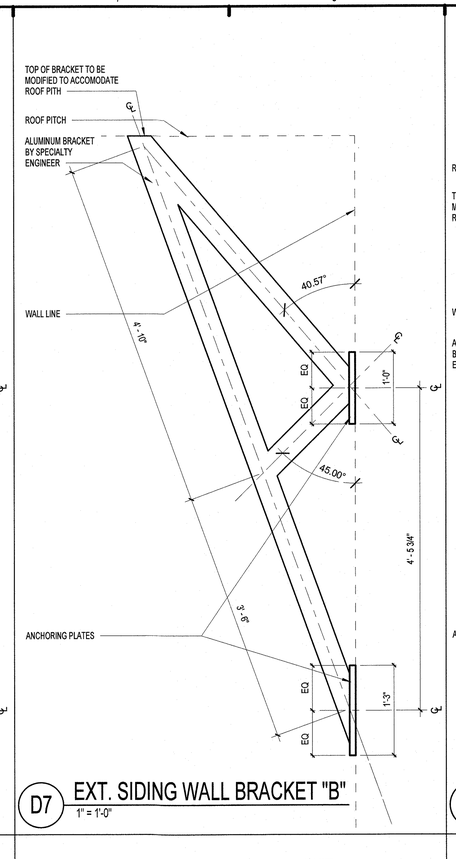

D7 EXT. SIDING WALL BRACKET "B"
1" = 1'-0"

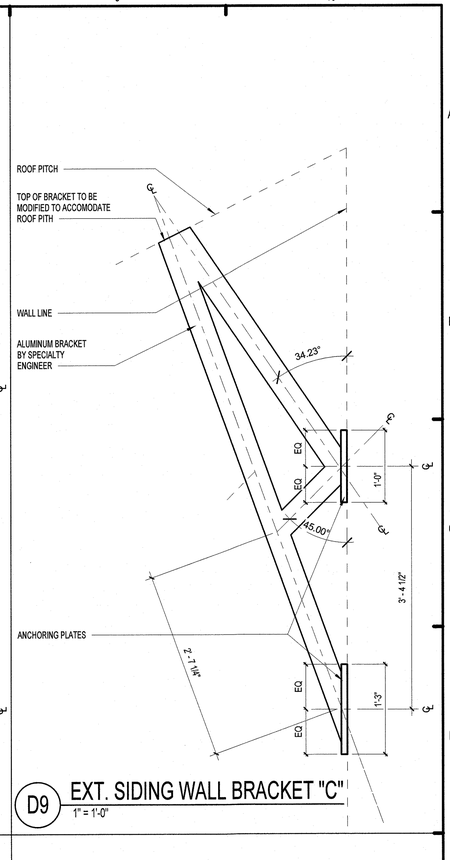

D9 EXT. SIDING WALL BRACKET "C"
1" = 1'-0"

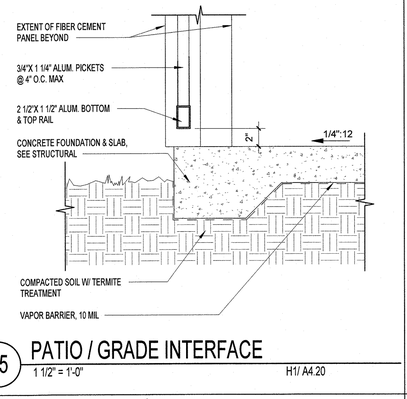

F5 PATIO / GRADE INTERFACE
1 1/2" = 1'-0" H1/ A4.20

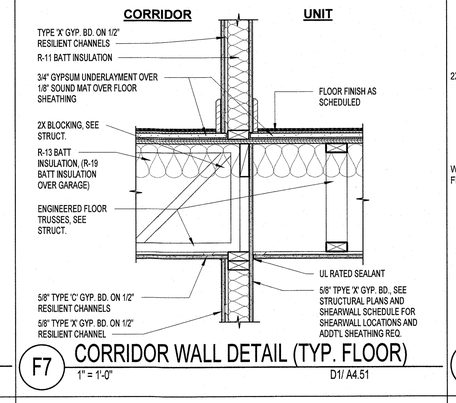

F7 CORRIDOR WALL DETAIL (TYP. FLOOR)
1" = 1'-0" D1/ A4.51

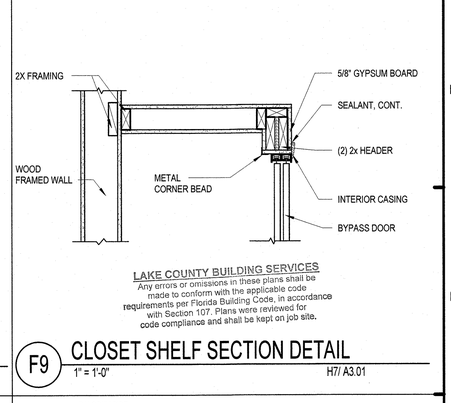

LAKE COUNTY BUILDING SERVICES
Any errors or omissions in these plans shall be made to conform with the applicable code requirements per Florida Building Code, in accordance with Section 107. Plans were reviewed for code compliance and shall be kept on job site.

F9 CLOSET SHELF SECTION DETAIL
1" = 1'-0" H7/ A3.01

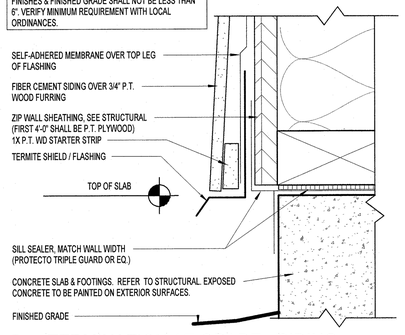

H1 TERMINATION AT GRADE - SIDING
6" = 1'-0" H7/ A5.01

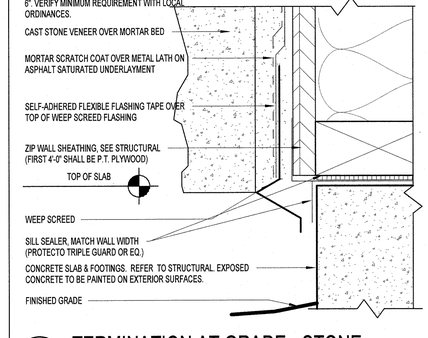

H3 TERMINATION AT GRADE - STONE
6" = 1'-0"

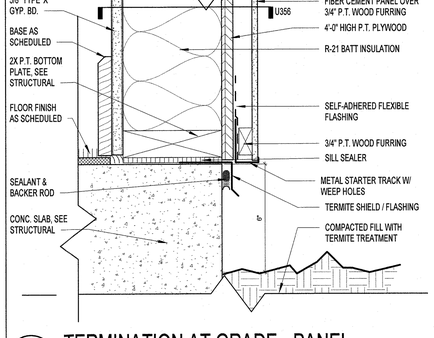

H5 TERMINATION AT GRADE - PANEL
3" = 1'-0" H1/ A5.01

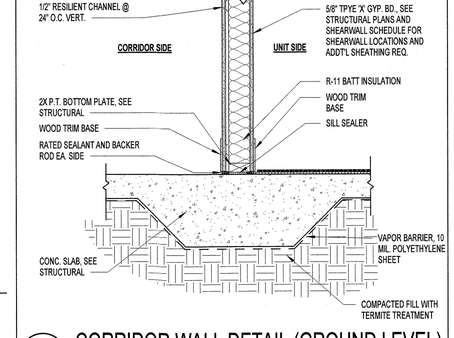

H7 CORRIDOR WALL DETAIL (GROUND LEVEL)
1" = 1'-0" D1/ A4.51

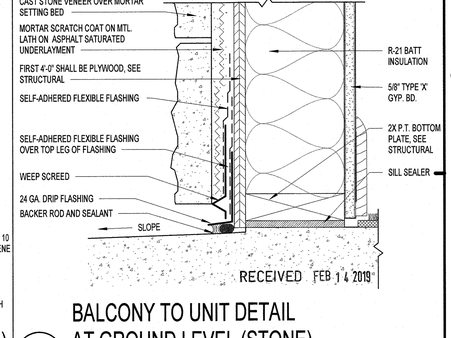

H9 BALCONY TO UNIT DETAIL AT GROUND LEVEL (STONE)
3" = 1'-0" D1/ A4.51

PERMIT REVIEW STAMP

ISSUE HISTORY

No.	Date	Description
1	02/08/2019	ISSUE FOR PERMIT

REVISION HISTORY

No.	Date	Description

© 2017 These documents are the property of FUGLEBERG KOCH - AA26002103, and are issued only for the specific project listed on these drawings. Any reproductions, revisions, or modifications of these documents without the expressed written consent of Fugleberg Koch, is prohibited by law.

FUGLEBERG KOCH
2555 Temple Trail, Winter Park, FL 32789 (407) 629-0595
www.fuglebergkoch.com AA26002103
CONSULTANT

MICHAEL E. GOVE
STATE OF FLORIDA LICENSE NO. AR94111
STATE OF FLORIDA * MICHAEL E. GOVE * REGISTERED ARCHITECT
AR94111
02/07/2019

SUMMER BAY APTS. II
LAKE COUNTY, FL

Drawn:	Author
Checked:	Checker
Approval:	Approver
Date:	Issue Date
Project #:	5389

WALL SECTION DETAILS

A5.02

PLOTTED: 2/12/2019 9:08:26 AM

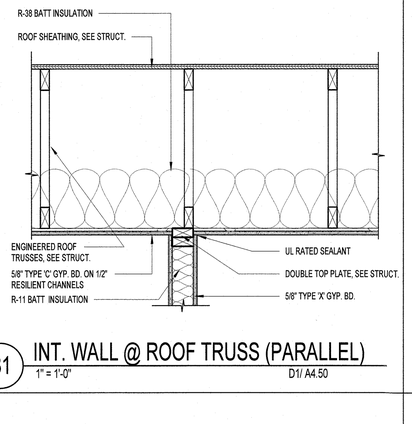

B1 INT. WALL @ ROOF TRUSS (PARALLEL)
1" = 1'-0" D1/ A4.50

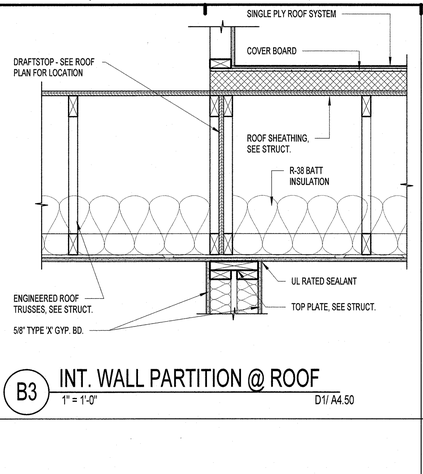

B3 INT. WALL PARTITION @ ROOF
1" = 1'-0" D1/ A4.50

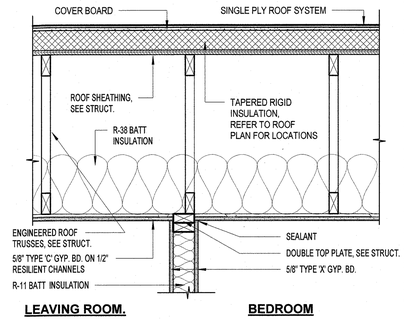

B5 INT. WALL DETAIL @ ROOF
1" = 1'-0" D1/ A4.50

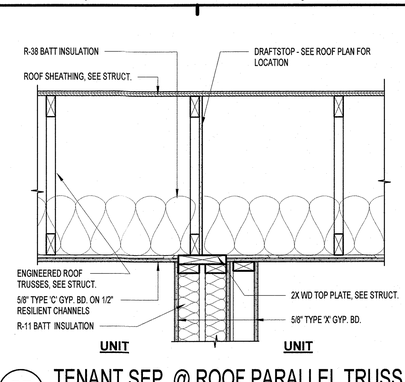

B7 TENANT SEP. @ ROOF PARALLEL TRUSS
1" = 1'-0" H1/ A4.50

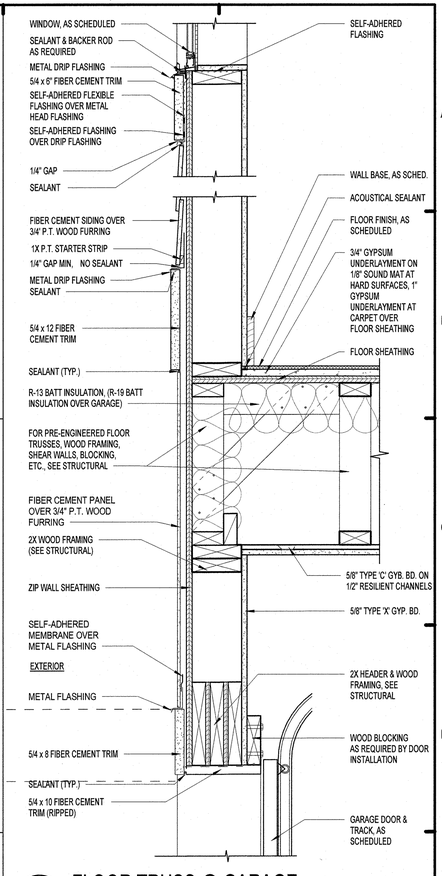

E9 FLOOR TRUSS @ GARAGE
1 1/2" = 1'-0" D1/ A4.51

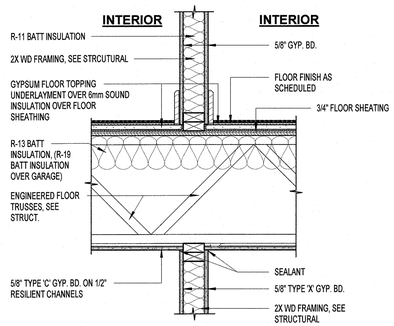

D5 INTERIOR WALL @ TYP. FLOOR (PERP.)
1" = 1'-0" D1/ A4.50

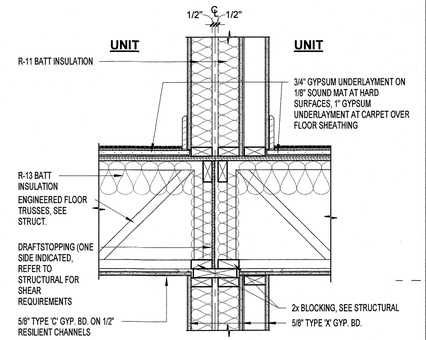

D7 TENANT SEP. @ TYP. FLOOR (PERP)
1" = 1'-0" H1/ A4.50

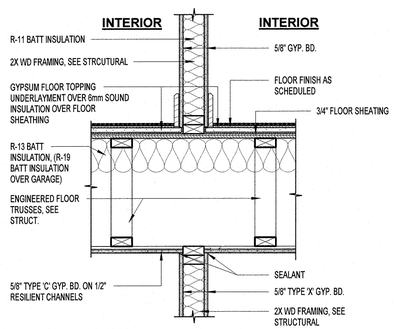

F5 INTERIOR WALL @ TYP. FLOOR (PARALLEL)
1" = 1'-0" H1/ A4.51

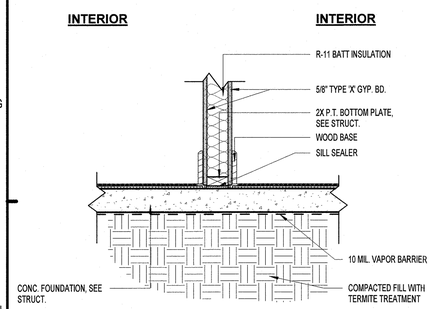

H1 TYP. INT. WALL SECTION @ 1ST LEVEL
1" = 1'-0" D1/ A4.50

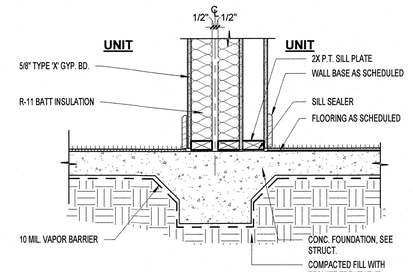

H7 TENANT SEPARATION @ FOUNDATION
1" = 1'-0" H1/ A4.50

LAKE COUNTY BUILDING SERVICES
Any errors or omissions in these plans shall be made to conform with the applicable code requirements per Florida Building Code, in accordance with Section 107. Plans were reviewed for code compliance and shall be kept on job site.

RECEIVED FEB 14 2019

PERMIT REVIEW STAMP

ISSUE HISTORY

No.	Date	Description
1	02/08/2019	ISSUE FOR PERMIT

REVISION HISTORY

No.	Date	Description

© 2017 These documents are the property of FUGLEBERG KOCH - AA26002103, and are issued only for the specific project noted on these drawings. Any reproductions, revisions, or modifications of these documents without the expressed written consent of Fuglebergh Koch, is prohibited by law.

FUGLEBERG KOCH
2555 Temple Trail, Winter Park, FL 32789 (407) 629-0595
www.fuglebergkoch.com AA26002103
CONSULTANT

MICHAEL E. GOVE
LICENSED ARCHITECT # AR94111
STATE OF FLORIDA
MICHAEL E. GOVE
AR94111
REGISTERED ARCHITECT
02/08/2019

SUMMER BAY APTS. II
LAKE COUNTY, FL

Drawn:	Author
Checked:	Checker
Approved:	Approver
Date:	Issue Date
Project #:	5389

WALL SECTION DETAILS

A5.03

PLOTTED: 2/11/2019 2:44:39 PM

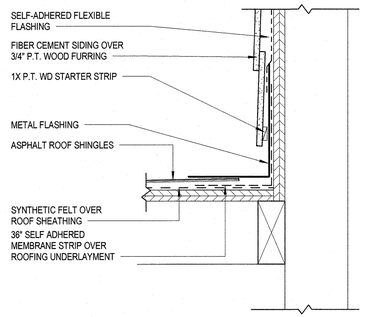

D1 RAKE FLASHING DETAIL (SIDING)
3" = 1'-0"

KEY:
1. WATER DIVERTER
2. SELF ADHERED FLASHING
3. N/A
4. STEP FLASHING

INSTALL WALL WATERPROOFING AND FLASHING IN SEQUENCE:

(STEP 1) INSTALL SELF ADHERED FLASHING AT CORNER, SEALED TO ROOF DECK AND WALL SHEATHING.

(STEP 2) INSTALL FIRST PIECE OF STEP FLASHING, THEN INSTALL THE METAL DIVERTER OVER THAT SECTION. THE STEP FLASHING INSTALLATION CONTINUES UP SLOPE WITH THE SHINGLE COURSES.

(STEP 3) INSTALL THE SELF-ADHERED MEMBRANE CONTINUING IT AROUND THE FASCIA BOARD TO THE EXTERIOR WALL AND EXTEND TO UNDERSIDE OF ROOF DECK.

(STEP 4) INSTALL ROOF UNDERLAYMENT OVER ROOF DECK, CORNER FLASHING, & UP WALL 4", THEN INSTALL SHINGLES.

(STEP 5) INSTALL SELF ADHERED FLASHING ALONG SEAM BETWEEN 4" OVERLAP OF ROOF UNDERLAYMENT AND WEATHER RESISTIVE BARRIER AND EXTEND TO DIVERTER.

(STEP 6) INSTALL WALL FINISH MATERIAL.

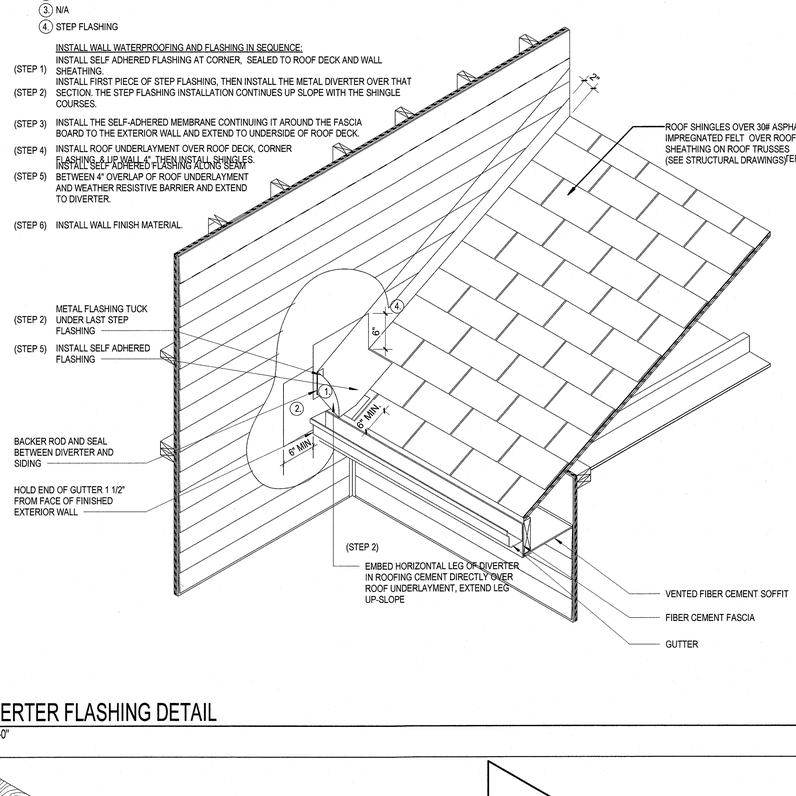

D3 DIVERTER FLASHING DETAIL
1" = 1'-0"

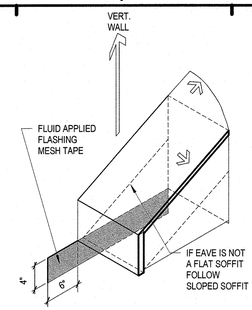

SEQUENCE #1 - EAVE TO WALL SUB FLASHING DETAIL

NOTE: THIS SEQ. OCCURS **BEFORE** THE RAIN DIVERTER ASSEMBLY AND METAL ROOF RAKE FLASHING IS INSTALLED AND **BEFORE** THE ROOF UNDERLAYMENT (I.E. FLUID APPLIED) IS INSTALLED.

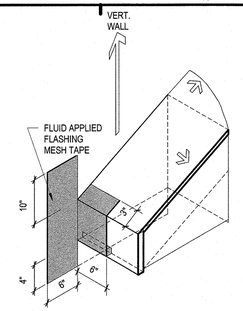

SEQUENCE #2 - EAVE TO WALL SUB FLASHING DETAIL

NOTE: THIS SEQ. OCCURS **BEFORE** THE RAIN DIVERTER ASSEMBLY AND METAL ROOF RAKE FLASHING IS INSTALLED AND **BEFORE** THE ROOF UNDERLAYMENT (I.E. FLUID APPLIED) IS INSTALLED.

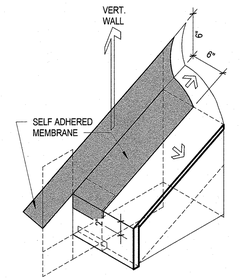

SEQUENCE #3 - EAVE TO WALL SUB FLASHING DETAIL

NOTE: THIS SEQ. OCCURS **BEFORE** THE RAIN DIVERTER ASSEMBLY AND METAL ROOF RAKE FLASHING IS INSTALLED AND **BEFORE** THE ROOF UNDERLAYMENT (I.E. FLUID APPLIED) IS INSTALLED.

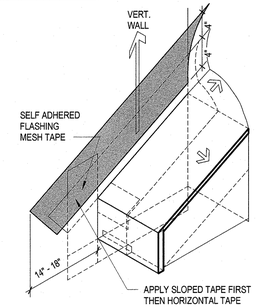

SEQUENCE #4 - EAVE TO WALL COUNTER FLASHING DETAIL

NOTE: THIS SEQ. OCCURS **AFTER** THE DIVERTER ASSEMBLY AND ROOF RAKE FLASHING IS INSTALLED BUT **BEFORE** THE UPPER PORTION OF THE ROOF UNDERLAYMENT (I.E. FLUID APPLIED) IS INSTALLED.

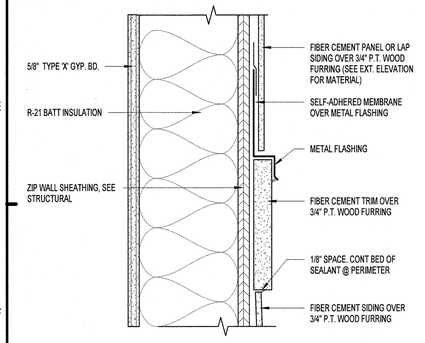

F1 FLASHING DETAIL @ TRIM BAND
3" = 1'-0"

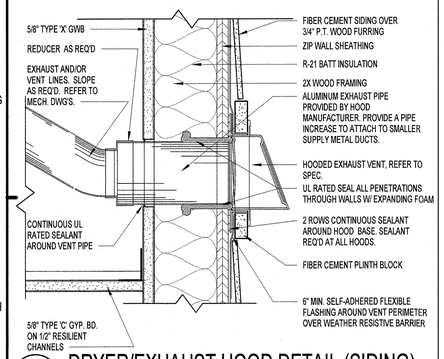

H1 DRYER/EXHAUST HOOD DETAIL (SIDING)
3" = 1'-0"

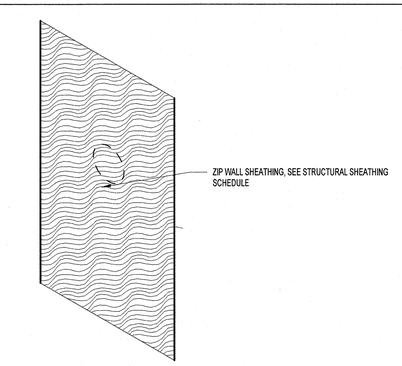

- STEP 1 -

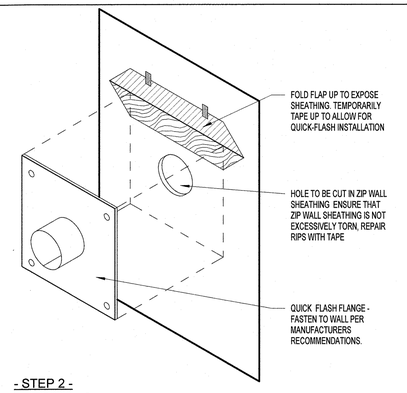

- STEP 2 -

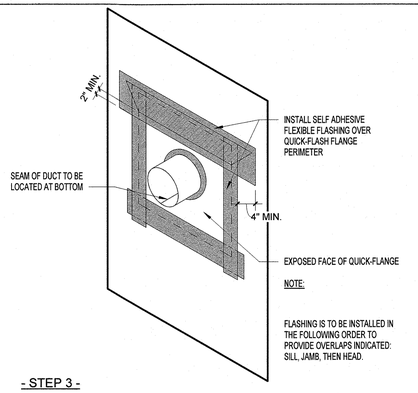

- STEP 3 -

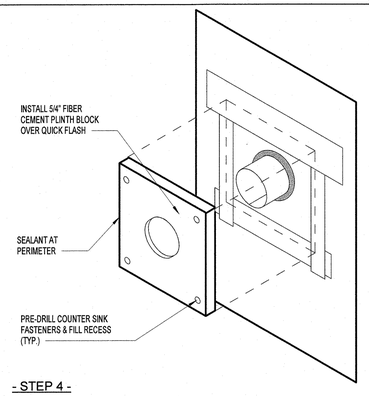

- STEP 4 -

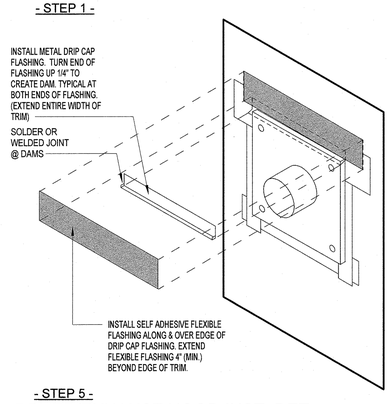

- STEP 5 -

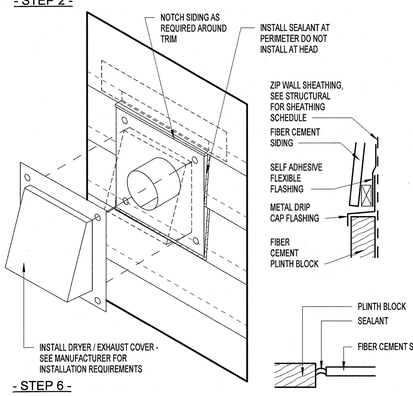

- STEP 6 -

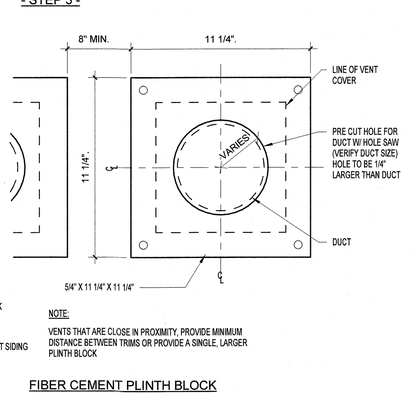

NOTE:
VENTS THAT ARE CLOSE IN PROXIMITY, PROVIDE MINIMUM DISTANCE BETWEEN TRIMS OR PROVIDE A SINGLE, LARGER PLINTH BLOCK

FIBER CEMENT PLINTH BLOCK

H3 DRYER/EXHAUST HOOD INST. DET.
12" = 1'-0"

LAKE COUNTY BUILDING SERVICES
Any errors or omissions in these plans shall be made to conform with the applicable code requirements per Florida Building Code, in accordance with Section 107. Plans were reviewed for code compliance and shall be kept on job site.

RECEIVED FEB 14 2019

PERMIT REVIEW STAMP

ISSUE HISTORY

No.	Date	Description
1	02/08/2019	ISSUE FOR PERMIT

REVISION HISTORY

No.	Date	Description

© 2017 These documents and/or concepts are the property of FUGLEBERG KOCH. All rights reserved. These documents are not to be used in whole or in part for any purpose without the written consent of Fugleberg Koch. Any reproduction, revision, or modification of these documents without the expressed written consent of Fugleberg Koch is prohibited by law.

FUGLEBERG KOCH
2555 Temple Trail, Winter Park, FL 32789 (407) 629-0595
www.fuglebergkoch.com AA26002103
CONSULTANT

MICHAEL E. GOVE
LICENSE NUMBER AR94111
STATE OF FLORIDA
MICHAEL E. GOVE
REGISTERED ARCHITECT
AR94111
02/08/2019

Drawn:	Author
Checked:	Checker
Approval:	Approver
Date:	Issue Date
Project #:	5389

SUMMER BAY APTS. II
LAKE COUNTY, FL

PENETRATION AND FLASHING DETAILS

A5.04

PLOTTED: 2/11/2019 2:44:44 PM

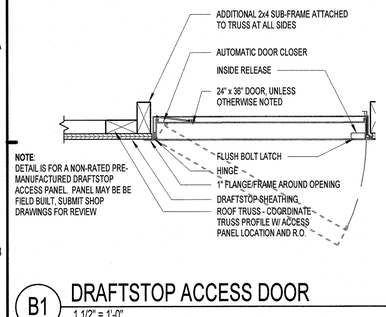

B1 DRAFTSTOP ACCESS DOOR
1 1/2" = 1'-0"

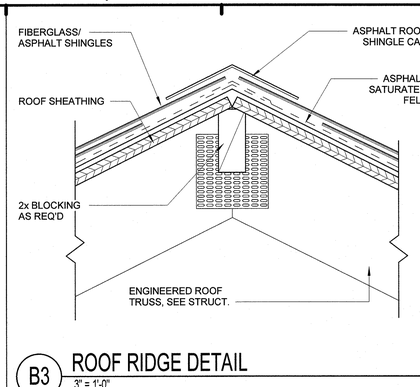

B3 ROOF RIDGE DETAIL
3" = 1'-0"

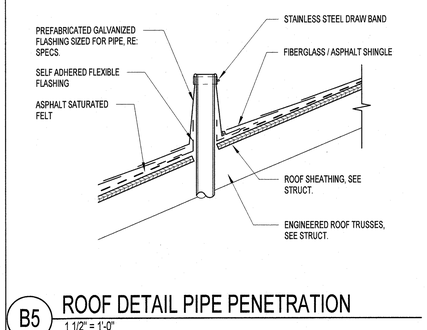

B5 ROOF DETAIL PIPE PENETRATION
1 1/2" = 1'-0"

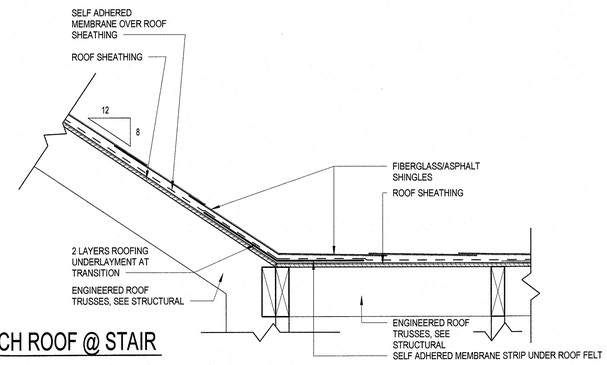

B7 DUAL PITCH ROOF @ STAIR
1 1/2" = 1'-0"

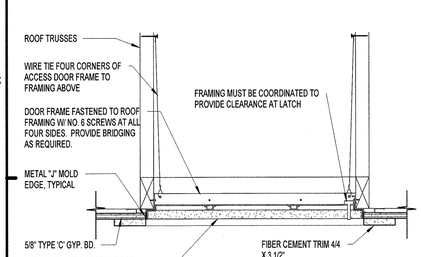

D1 ATTIC ACCESS DETAIL (RATED)
1 1/2" = 1'-0"

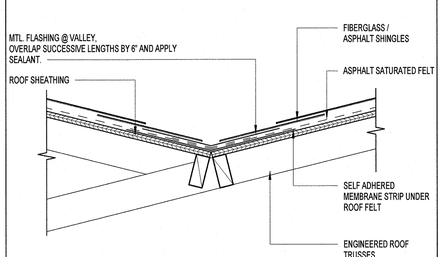

D3 ROOF VALLEY - SHINGLE ROOF
1 1/2" = 1'-0"

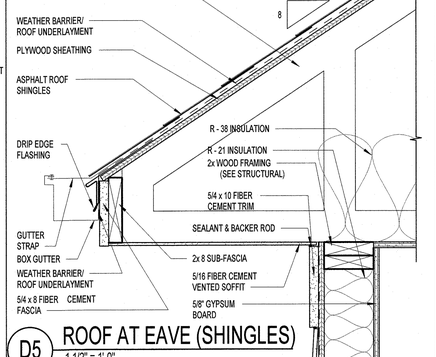

D5 ROOF AT EAVE (SHINGLES)
1 1/2" = 1'-0"

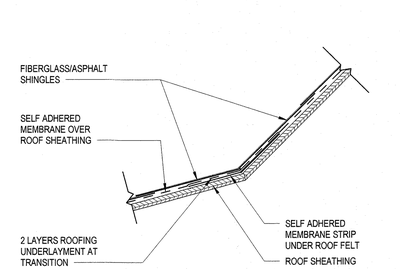

D7 ROOF DETAIL SLOPE TRANSITION
1 1/2" = 1'-0"

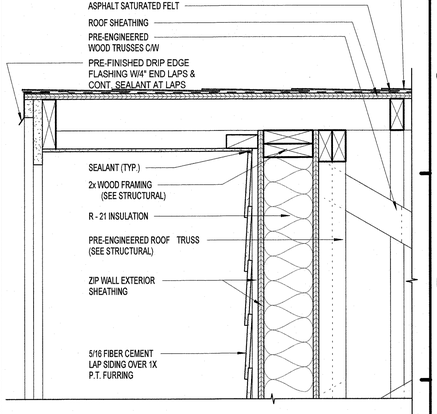

E9 ROOF EAVE AT HIP/GABLE
1 1/2" = 1'-0"

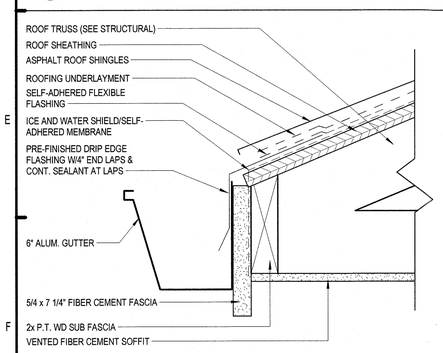

F1 EAVE FLASHING DETAIL @ SOFFIT
3" = 1'-0"

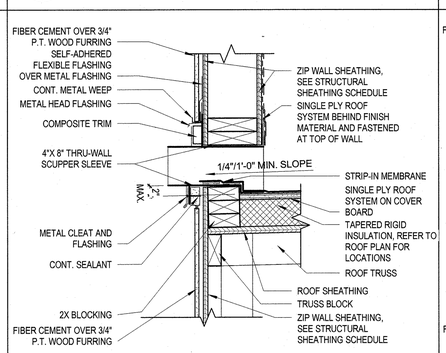

F3 OVERFLOW SCUPPER DETAIL
1 1/2" = 1'-0"

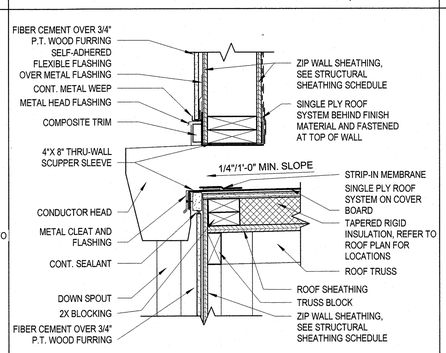

F5 SCUPPER DETAIL AT FRAME WALL
1 1/2" = 1'-0"

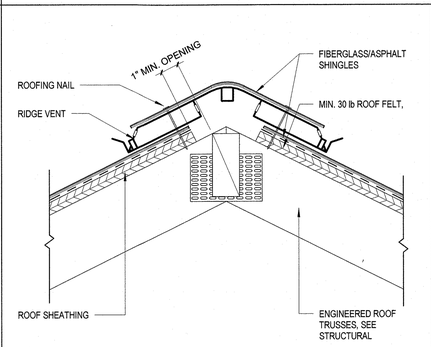

F7 RIDGE VENT DETAIL (SHINGLE)
3" = 1'-0"

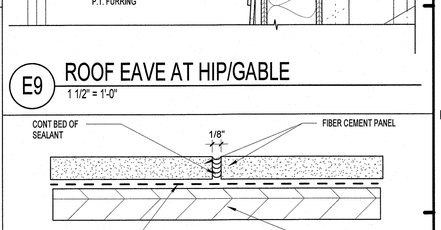

F9 FIBER CEMENT PANEL BOARD DETAIL
12" = 1'-0"

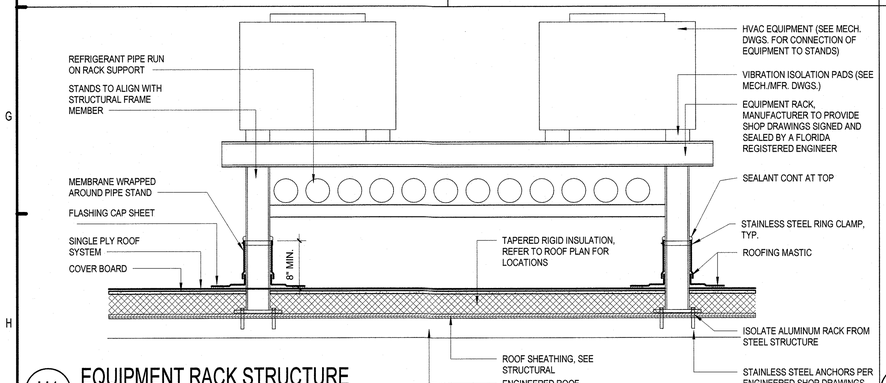

H1 EQUIPMENT RACK STRUCTURE
1" = 1'-0"

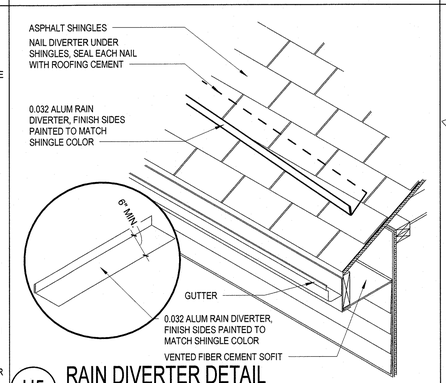

H5 RAIN DIVERTER DETAIL
1" = 1'-0"

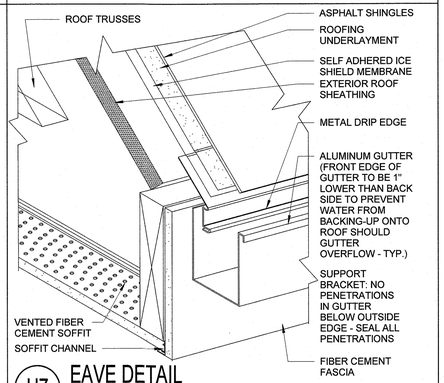

H7 EAVE DETAIL
3" = 1'-0"

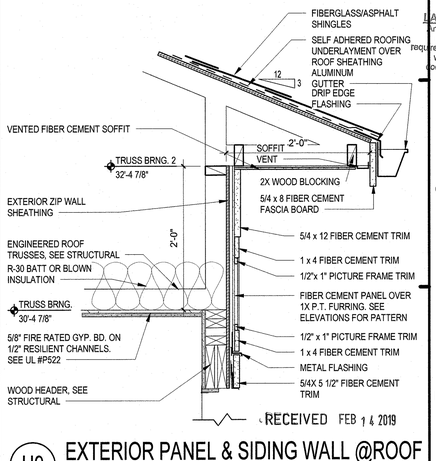

H9 EXTERIOR PANEL & SIDING WALL @ROOF
1" = 1'-0"

PERMIT REVIEW STAMP

ISSUE HISTORY

No.	Date	Description
1	02/08/2019	ISSUE FOR PERMIT

REVISION HISTORY

No.	Date	Description

© 2017 These documents and their contents are the property of FUGLEBERG KOCH ARCH. ADDED2016, and are issued only for the specific project listed on these drawings. Any reproductions, revisions, or modifications of these documents without the expressed written consent of Fugleberg Koch, is prohibited by law.

FUGLEBERG KOCH
2555 Temple Trail, Winter Park, FL 32789 (407) 629-0595
www.fuglebergkoch.com AA26002103
CONSULTANT

LAKE COUNTY BUILDING SERVICES
Any errors or omissions in these plans shall be made to conform with the applicable code requirements per Florida Building Code, in accordance with Section 107. Plans were reviewed for code compliance and shall be kept on job site.

MICHAEL E. GOVE
FLORIDA LICENSE # AR94111
STATE OF FLORIDA
MICHAEL E. GOVE
AR94111
REGISTERED ARCHITECT
02/08/2019

SUMMER BAY APTS. II
LAKE COUNTY, FL

Drawn:	Author
Checked:	Checker
Approved:	Approver
Date:	Issue Date
Project #:	5389

ROOF DETAILS

A5.05

PLOTTED: 2/11/2019 2:44:51 PM

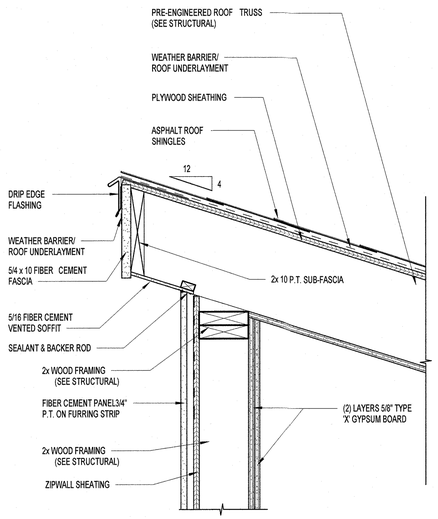

C1 ROOF AT EAVE (SHINGLES) 2
1 1/2" = 1'-0"

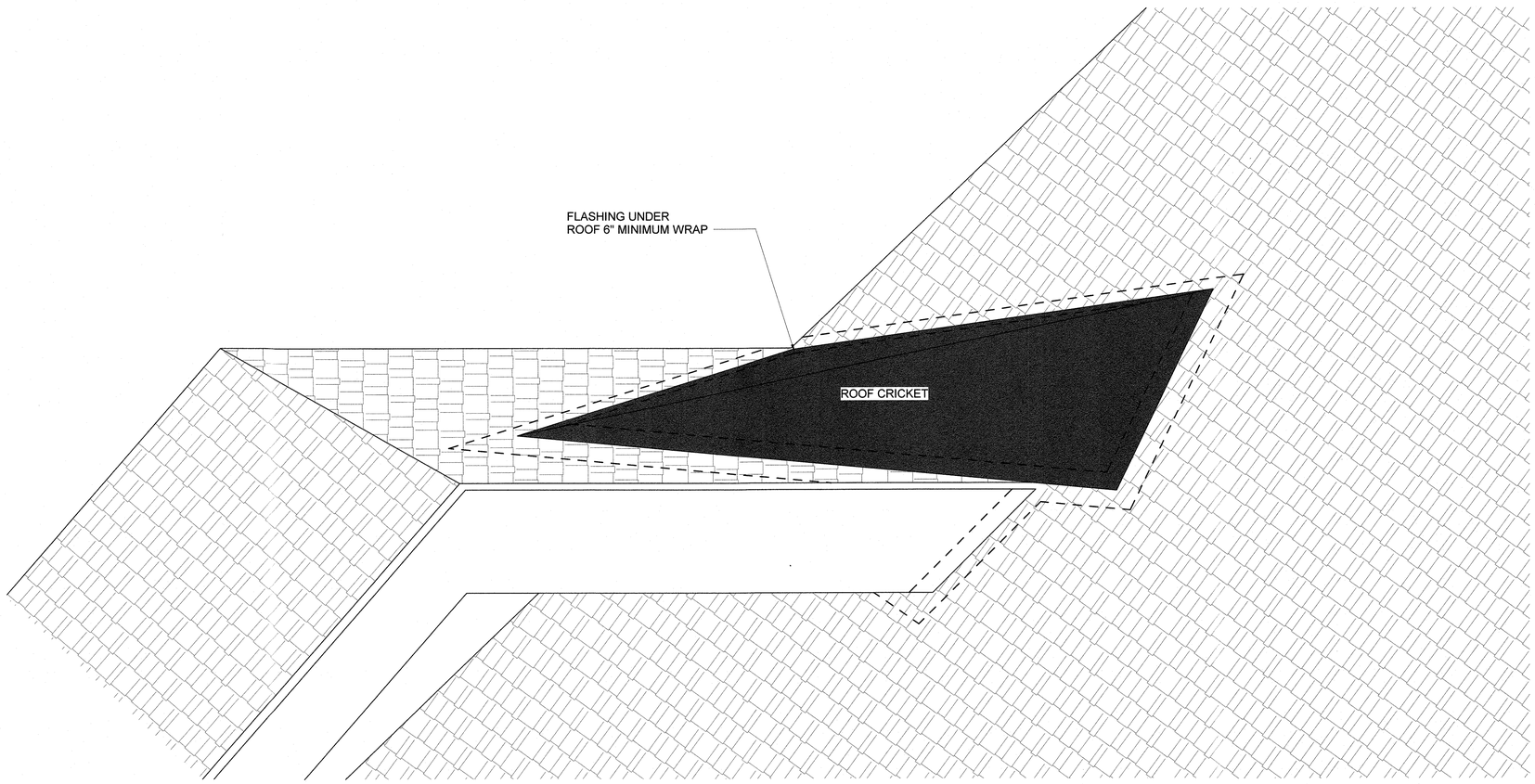

H1 ROOF DETAIL - CRICKET
3" = 1'-0"

LAKE COUNTY BUILDING SERVICES
Any errors or omissions in these plans shall be made to conform with the applicable code requirements per Florida Building Code, in accordance with Section 107. Plans were reviewed for code compliance and shall be kept on job site.

RECEIVED FEB 14 2019

PERMIT REVIEW STAMP

ISSUE HISTORY

No.	Date	Description
1	02/08/2019	ISSUE FOR PERMIT

REVISION HISTORY

No.	Date	Description

FUGLEBERG KOCH
2555 Temple Trail, Winter Park, FL 32789 (407) 629-0595
www.fuglebergkoch.com AA26002103

CONSULTANT

MICHAEL E. GOVE
FLORIDA LICENSE #AR94111
STATE OF FLORIDA
MICHAEL E. GOVE
AR94111
REGISTERED ARCHITECT
02/08/2019

SUMMER BAY
APTS. II
LAKE COUNTY, FL

Drawn:	Author
Checked:	Checker
Approval:	Approver
Date:	Issue Date
Project #:	5389

ROOF DETAILS

A5.06

PLOTTED: 2/11/2019
2:44:55 PM

© 2017 These documents and their contents are the property of FUGLEBERG KOCH - AA26002103, and are issued only for the specific project noted on these drawings. Any reproductions, revisions, or modifications of these documents without the expressed written consent of Fugleberg Koch, is prohibited by law.

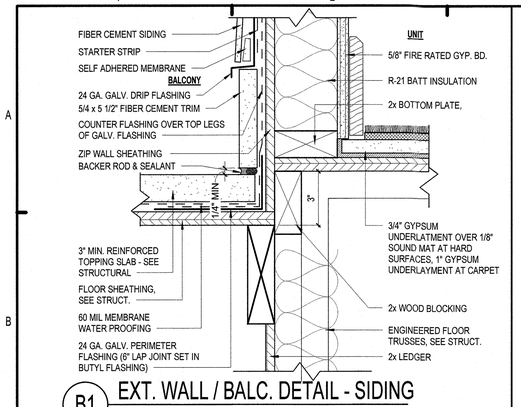

B1 EXT. WALL / BALC. DETAIL - SIDING
3" = 1'-0" F5/ A5.01

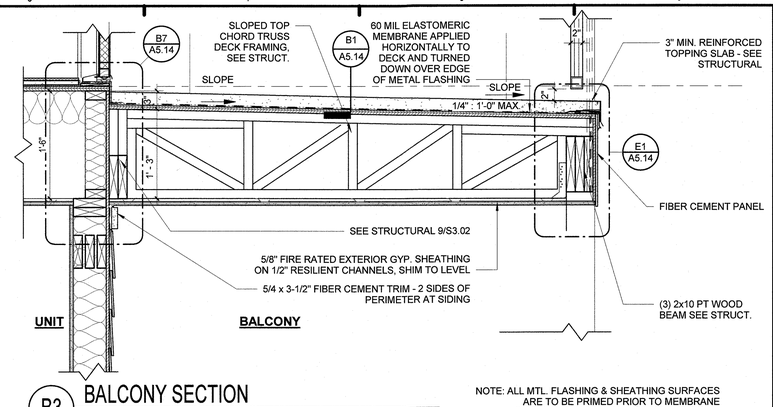

B3 BALCONY SECTION
1" = 1'-0" H1/ A4.20

NOTE: ALL MTL. FLASHING & SHEATHING SURFACES ARE TO BE PRIMED PRIOR TO MEMBRANE INSTALLATION PER MANUFACTURER REQS.

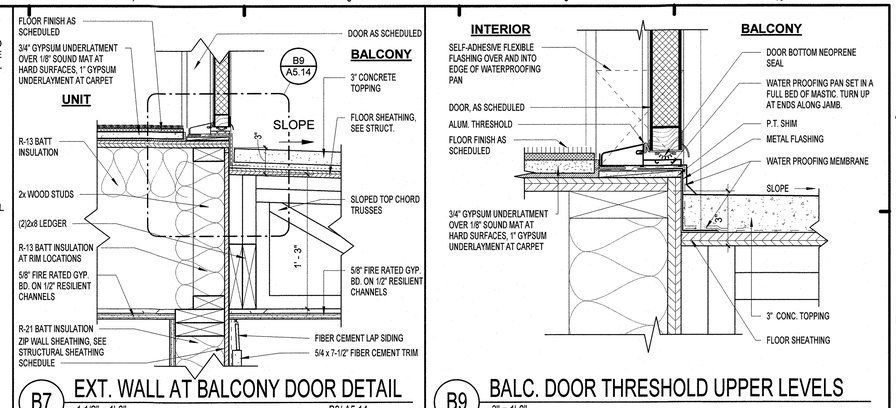

B7 EXT. WALL AT BALCONY DOOR DETAIL
1 1/2" = 1'-0" B3/ A5.14

B9 BALC. DOOR THRESHOLD UPPER LEVELS
3" = 1'-0"

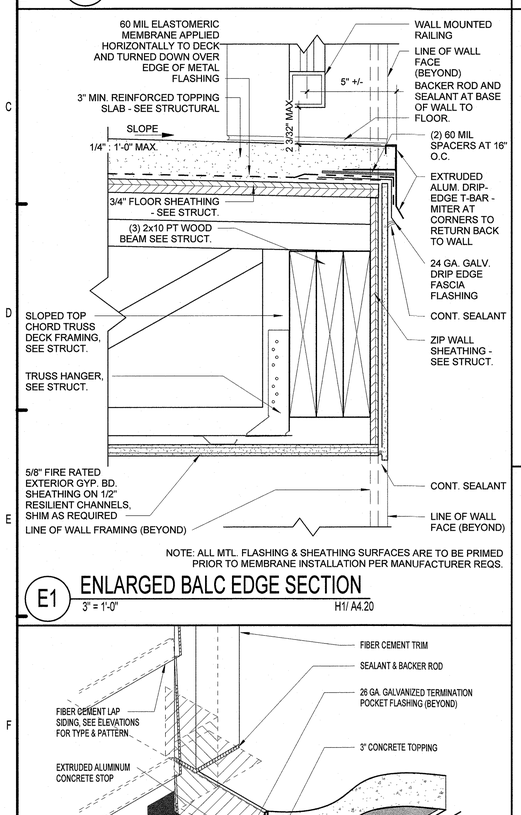

NOTE: ALL MTL. FLASHING & SHEATHING SURFACES ARE TO BE PRIMED PRIOR TO MEMBRANE INSTALLATION PER MANUFACTURER REQS.

E1 ENLARGED BALC EDGE SECTION
3" = 1'-0" H1/ A4.20

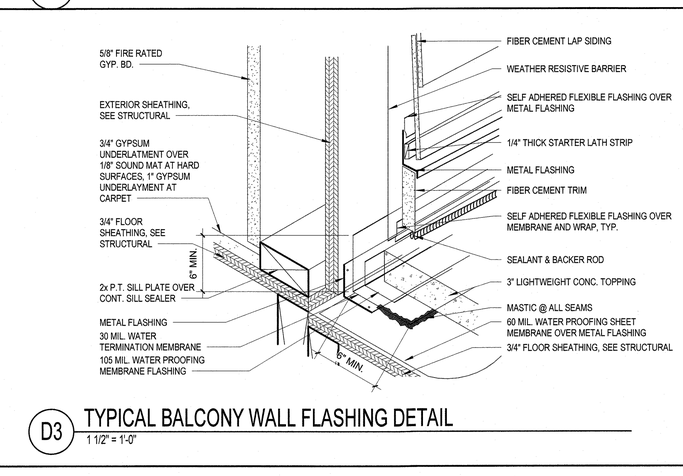

D3 TYPICAL BALCONY WALL FLASHING DETAIL
1 1/2" = 1'-0"

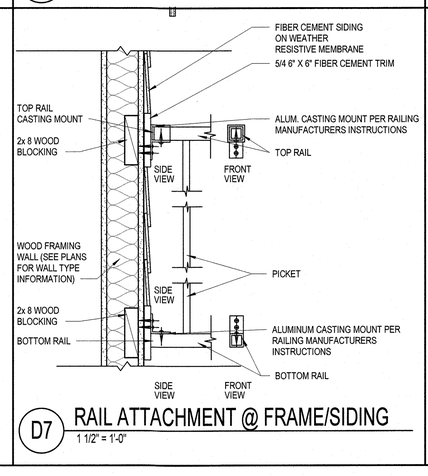

D7 RAIL ATTACHMENT @ FRAME/SIDING
1 1/2" = 1'-0"

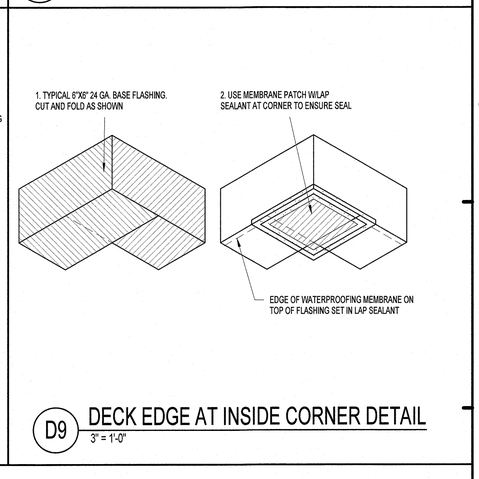

D9 DECK EDGE AT INSIDE CORNER DETAIL
3" = 1'-0"

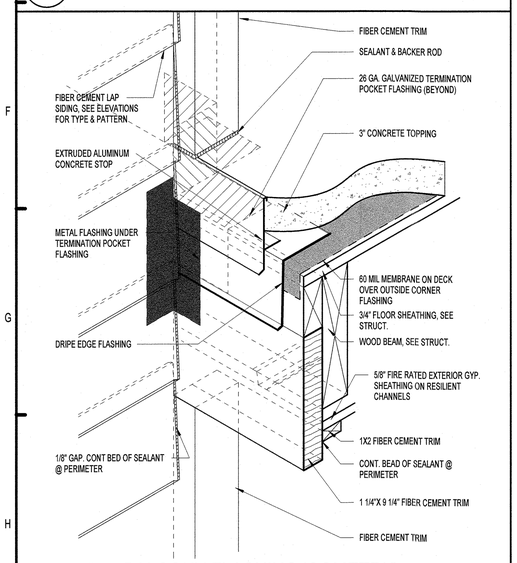

H1 BALCONY FLASHING ISOMETRIC
1 : 5

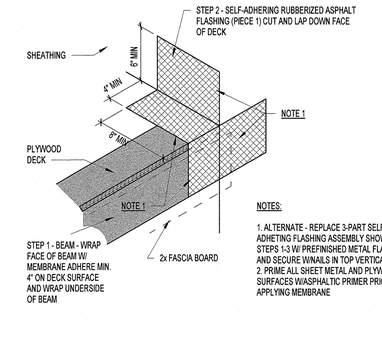

F3 WATERPROOFING STEP 1
1 1/2" = 1'-0"

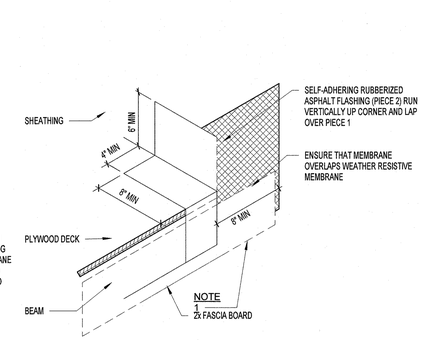

F5 WATERPROOFING STEP 2
1 1/2" = 1'-0"

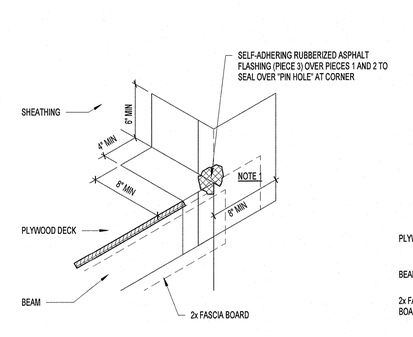

F7 WATERPROOFING STEP 3
1 1/2" = 1'-0"

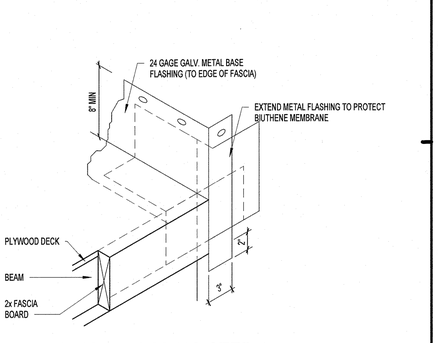

F9 WATERPROOFING STEP 4
1 1/2" = 1'-0"

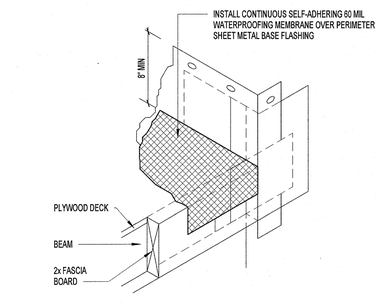

H3 WATERPROOFING STEP 5
1 1/2" = 1'-0"

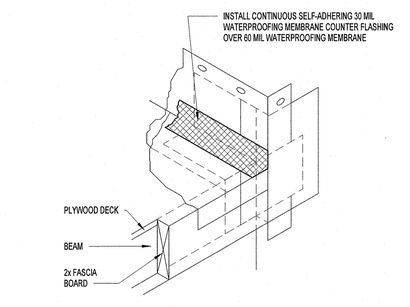

H5 WATERPROOFING STEP 6
1 1/2" = 1'-0"

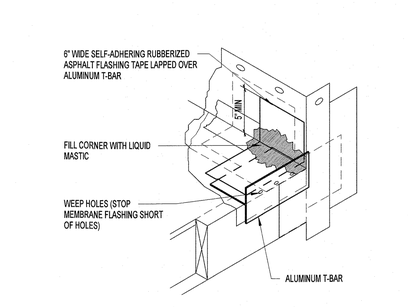

H7 WATERPROOFING STEP 7
1 1/2" = 1'-0"

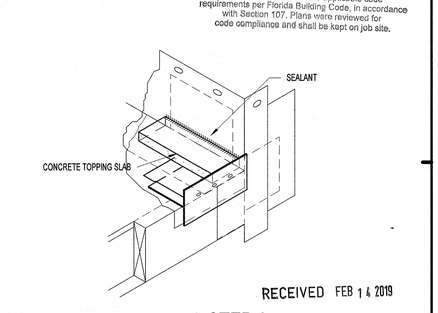

H9 WATERPROOFING STEP 8
1 1/2" = 1'-0"

PERMIT REVIEW STAMP

ISSUE HISTORY

No.	Date	Description
1	02/08/2019	ISSUE FOR PERMIT

REVISION HISTORY

No.	Date	Description

© 2017 These documents are the property of FUGLEBERG KOCH / AA26002103, and are issued only for the specific project listed on these drawings. Any reproductions, revisions, or modifications of these documents without the expressed written consent of Fugleberg Koch, is prohibited by law.

FUGLEBERG KOCH
2555 Temple Trail, Winter Park, FL 32789 (407) 629-0595
www.fuglebergkoch.com AA26002103
CONSULTANT

LAKE COUNTY BUILDING SERVICES
Any errors or omissions in these plans shall be made to conform with the applicable code requirements per Florida Building Code, in accordance with Section 107. Plans were reviewed for code compliance and shall be kept on job site.

MICHAEL E. GOVE
FLORIDA LICENSE # AR94111
STATE OF FLORIDA MICHAEL E. GOVE AR94111 REGISTERED ARCHITECT
02/08/2019

RECEIVED FEB 14 2019

SUMMER BAY APTS. II	Drawn: KP
LAKE COUNTY, FL	Checked: KL
	Approval: KL
	Date: Issue Date
	Project #: 5389

BALCONY WATERPROOFING DETAILS

A5.14

PLOTTED: 2/11/2019 2:45:02 PM

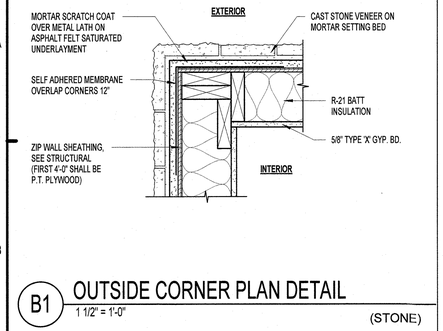

B1 OUTSIDE CORNER PLAN DETAIL

1 1/2" = 1'-0" (STONE)

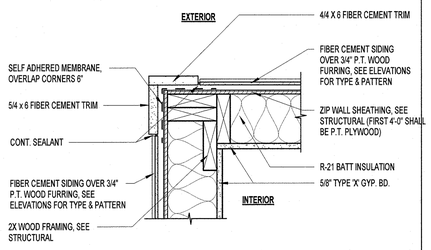

B3 OUTSIDE CORNER PLAN DETAIL

1 1/2" = 1'-0" (SIDING)

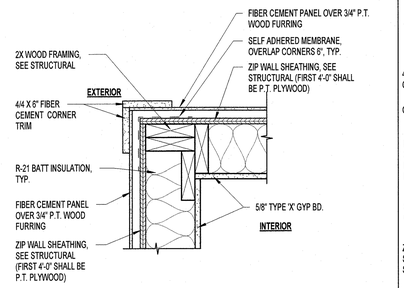

B5 OUTSIDE CORNER PLAN DETAIL

1 1/2" = 1'-0" (PANEL)

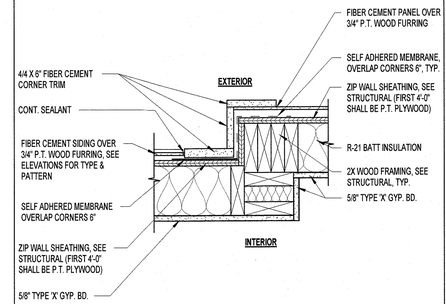

B7 OUTSIDE CORNER PLAN DETAIL

1 1/2" = 1'-0" (SIDING/PANEL)

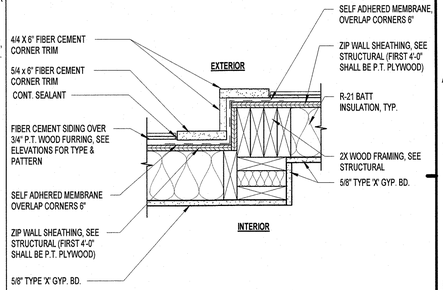

B9 OUTSIDE CORNER PLAN DETAIL

1 1/2" = 1'-0" (SIDING)

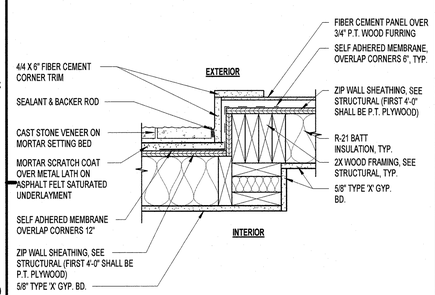

D1 OUTSIDE CORNER PLAN DETAIL

1 1/2" = 1'-0"

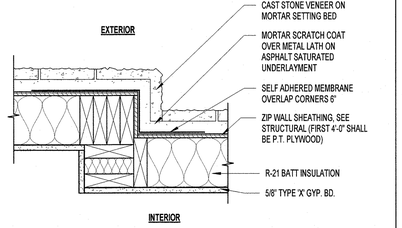

D3 OUTSIDE CORNER PLAN DETAIL

1 1/2" = 1'-0" (STONE)

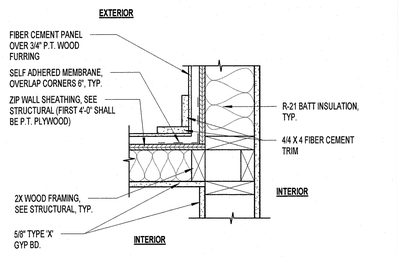

D5 INSIDE CORNER PLAN DETAIL

1 1/2" = 1'-0" (PANEL)

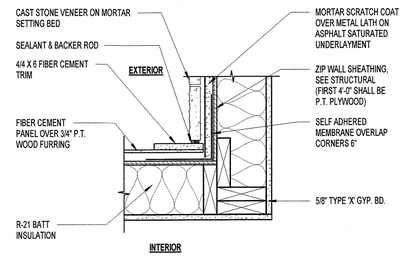

D7 INSIDE CORNER TRANS PLAN DETAIL

1 1/2" = 1'-0" (STONE/PANEL)

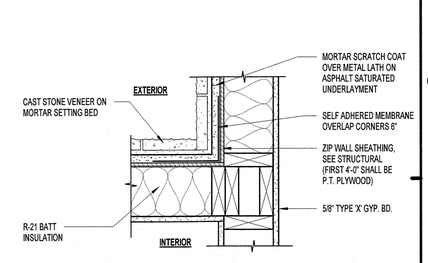

D9 INSIDE CORNER DETAIL

1 1/2" = 1'-0" (STONE)

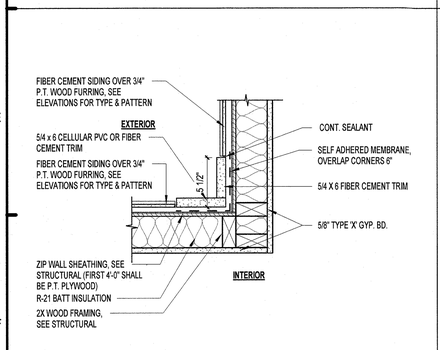

F1 INSIDE CORNER PLAN DETAIL

1 1/2" = 1'-0" (SIDING)

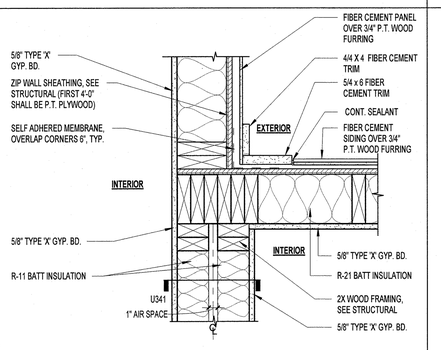

F3 PARTY END WALL INTER PLAN DTL

1 1/2" = 1'-0"

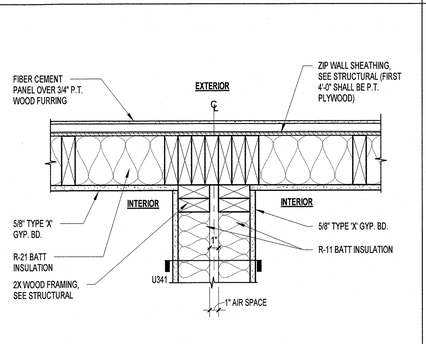

F5 PARTY END WALL INTER. PLAN DETAIL

1 1/2" = 1'-0" (PANEL)

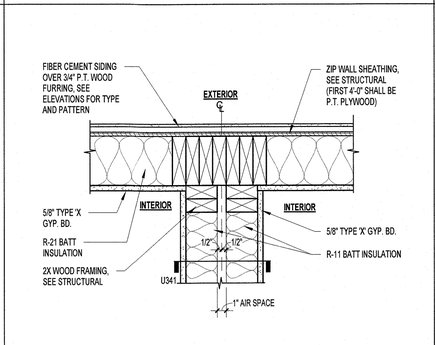

F7 PARTY END WALL INTER. PLAN DETAIL

1 1/2" = 1'-0" (SIDING)

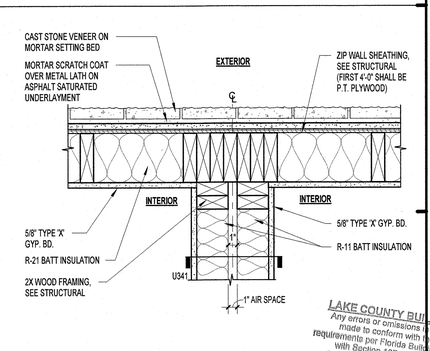

F9 EXTERIOR WALL INT. DETAIL

1 1/2" = 1'-0" (STONE)

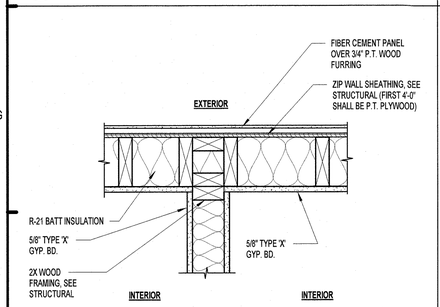

H1 END WALL INTERSECTION PLAN DETAIL

1 1/2" = 1'-0" (PANEL)

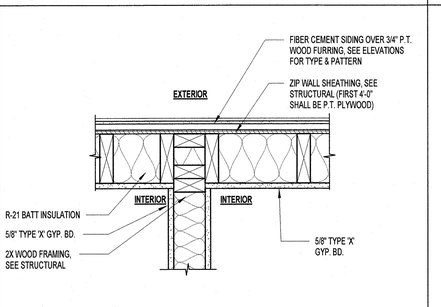

H3 END WALL INTERSECTION PLAN DETAIL

1 1/2" = 1'-0" (SIDING)

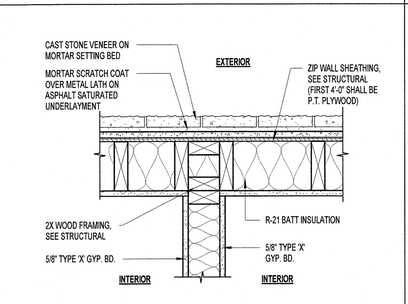

H5 EXTERIOR WALL INT. DETAIL

1 1/2" = 1'-0" (STONE)

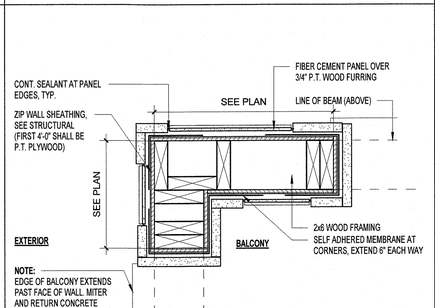

H7 PLAN DETAIL @ BALCONY COLUMN

1 1/2" = 1'-0" (PANEL)

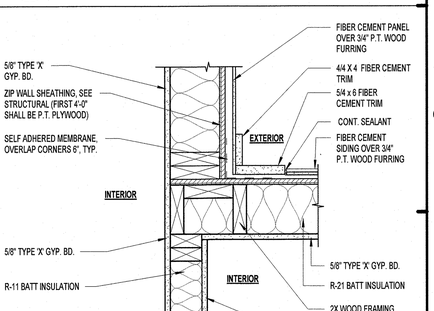

H9 INSIDE CORNER DETAIL (SIDING-PANEL)

1 1/2" = 1'-0"

RECEIVED FEB 14 2019

PERMIT REVIEW STAMP

ISSUE HISTORY

No.	Date	Description
1	02/08/2019	ISSUE FOR PERMIT

REVISION HISTORY

No.	Date	Description

© 2017 These documents and their contents are the property of FUGLEBERG KOCH - AA26002103, and are issued only for the specific project noted on these drawings. Any reproduction, revision or modification of these documents without the expressed written consent of Fugleberg Koch, is prohibited by law.

FUGLEBERG KOCH
2555 Temple Trail, Winter Park, FL 32789 (407) 629-0595
www.fuglebergkoch.com AA26002103
CONSULTANT

LAKE COUNTY BUILDING SERVICES
Any errors or omissions found in these plans shall be made to conform with the applicable code requirements per Florida Building Code, In accordance with Section 107. Plans were reviewed for code compliance and shall be kept on job site.

MICHAEL E. GOVE
FLORIDA REGISTERED #AR94111
STATE OF FLORIDA
02/08/2019
AR94111
REGISTERED ARCHITECT

Drawn:	Author
Checked:	Checker
Approval:	Approver
Date:	Issue Date
Project #:	5389

SUMMER BAY APTS. II
LAKE COUNTY, FL

PLAN DETAILS

A6.01

PLOTTED: 2/11/2019 2:45:08 PM

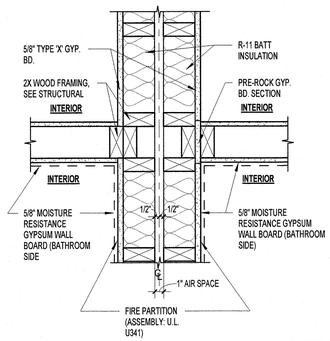

B1 FIRE WALL INTERSECTION PLAN DETAIL

1 1/2" = 1'-0"

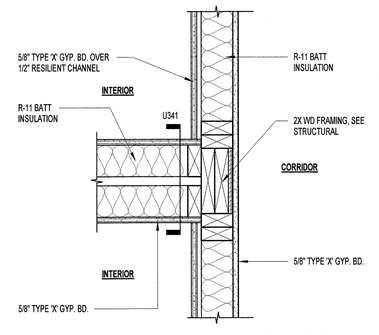

B3 CORRIDOR PLAN DETAIL @ PARTY WALL

1 1/2" = 1'-0"

(GROUND LEVEL)

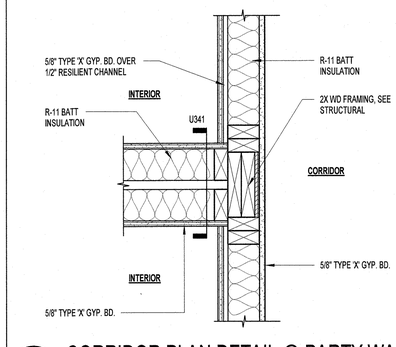

B5 CORRIDOR PLAN DETAIL @ PARTY WALL

1 1/2" = 1'-0"

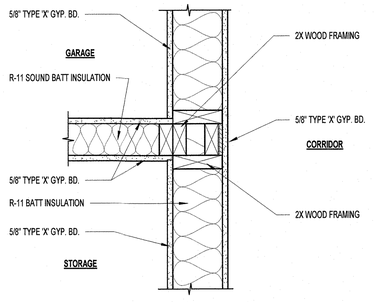

B7 INTERIOR WALL PLAN DETAIL

1 1/2" = 1'-0"

(STORAGE-GARAGE TO CORRIDOR)

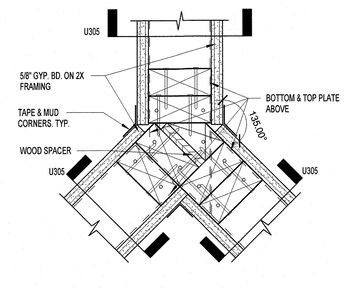

B9 INTERIOR WALL - "Y" INTERSECTION

3" = 1'-0"

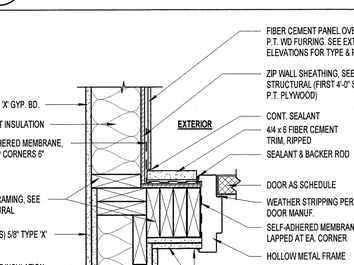

D1 INTERIOR WALL - 45 DEGREES CORNER

3" = 1'-0"

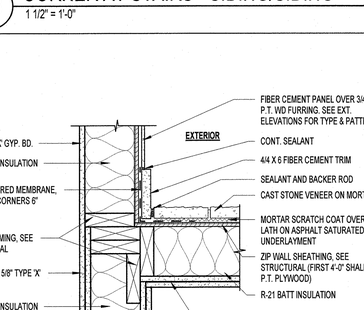

D3 INTERIOR WALL PLAN DETAIL

1 1/2" = 1'-0"

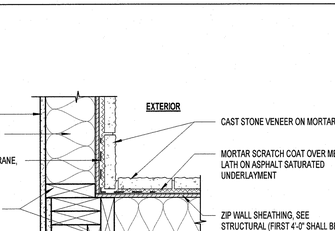

D5 INT. CORNER STORAGE PLAN DETAIL

1 1/2" = 1'-0"

(STORAGE-STORAGE TO GARAGE OR CORRIDOR)

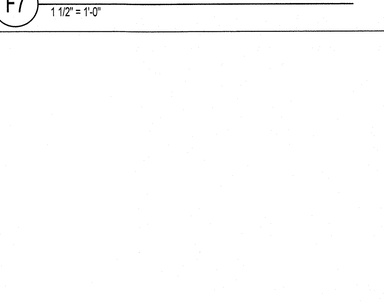

D7 COLUMN DETAIL

1 1/2" = 1'-0"

D9 COLUMN DETAIL

1 1/2" = 1'-0"

F1 CORNER AT STAIRS DETAIL

1 1/2" = 1'-0"

F3 CORNER AT STAIRS - SIDING/SIDING

1 1/2" = 1'-0"

F5 CORNER AT STAIRS - SIDING/PANEL

1 1/2" = 1'-0"

F7 OUTSIDE CORNER PLAN DETAIL

1 1/2" = 1'-0"

H1 CORNER AT STAIRS DOOR - PANEL DETAIL

1 1/2" = 1'-0"

H3 CORNER AT STAIRS - PANEL/STONE

1 1/2" = 1'-0"

H5 CORNER AT STAIRS - STONE/STONE

1 1/2" = 1'-0"

LAKE COUNTY BUILDING SERVICES

Any errors or omissions in these plans shall be made to conform with the applicable code requirements per Florida Building Code, in accordance with Section 107. Plans were reviewed for code compliance and shall be kept on job site.

RECEIVED FEB 14 2019

PERMIT REVIEW STAMP

ISSUE HISTORY

No.	Date	Description
1	02/08/2019	ISSUE FOR PERMIT

REVISION HISTORY

No.	Date	Description

© 2017 These documents and their contents are the property of FUGLEBERG KOCH - AA26002103, and are issued only for the specific project noted on these drawings. Any reproduction, revisions, or modifications of these documents without the expressed written consent of Fuglebergh Koch, is prohibited by law.

FUGLEBERG KOCH

2555 Temple Trail, Winter Park, FL 32789 (407) 629-0595
www.fuglebergkoch.com AA26002103

CONSULTANT

MICHAEL E. GOVE
FLORIDA LICENSE # AR94111

STATE OF FLORIDA
MICHAEL E. GOVE
AR94111
REGISTERED ARCHITECT

02/08/2019

SUMMER BAY APTS. II

LAKE COUNTY, FL

Drawn:	Author
Checked:	Checker
Approval:	Approver
Date:	Issue Date
Project #:	5389

PLAN DETAILS

A6.02

PLOTTED: 2/11/2019 2:45:14 PM

DOOR SCHEDULE - COMMON AREAS

DOOR MARK	DOOR TYPE	DOOR WIDTH	DOOR HEIGHT	DOOR THICKNESS	DOOR MATERIAL	GLAZING TYPE	DOOR MATERIAL	HARDWARE SET	DOOR RATING	REMARKS
A01	G	6'-0"	8'-0"	1 3/4"	INSUL. ALUM.	LOW-E	INSUL. ALUM.	MANUF.		THERMALLY BROKEN, PANIC HDWAR., FPA
A02	A	3'-0"	6'-8"	1 3/8"	INSUL. HM		INSUL. HM	02	20 MIN.	THERMALLY BROKEN, SPRING HINGE
A03	H	3'-0"	6'-8"	1 3/4"	INSUL. ALUM.	LOW-E	INSUL. ALUM.	MANUF.		THERMALLY BROKEN, PANIC HDWAR., FPA
A04	J	3'-0"	6'-8"	1 3/8"	INSUL. HM		INSUL. HM	04		THERMALLY BROKEN, SPRING HINGE, FPA
A05	J	3'-0"	6'-8"	1 3/8"	HM		HM	02		UTILITY CLOSET, FPA
A06	K	6'-0"	6'-8"	1 3/4"	HM		HM	03		UTILITY CLOSET, FPA, PANIC HDWR.
A07	A	3'-0"	6'-8"	1 3/4"	HM		HM	05	90 MIN.	PANIC HDWR.
A08	F	9'-0"	7'-0"	1 1/2"	MTL		MTL	01	20 MIN.	OVERHEAD DOOR

FPA = FLORIDA PRODUCT APPROVAL REQUIRED, SEE A0.02 FOR BASIS OF DESIGN

DOOR SCHEDULE - UNITS

DOOR MARK	DOOR TYPE	DOOR WIDTH	DOOR HEIGHT	DOOR THICKNESS	DOOR MATERIAL	GLAZING TYPE	DOOR MATERIAL	HARDWARE SET	DOOR RATING	REMARKS
U01	A	3'-0"	8'-0"	1 3/8"	HM		HM	U1	20 MIN.	PROVIDE WIDE ANGLE DOOR VIEWER, SPRING HINGE
U02	A	2'-10"	6'-8"	1 3/8"	WD		WD	U3		
U03	A	1'-8"	6'-8"	1 3/8"	WD		WD	U4		
U04	B	3'-0"	6'-8"	1 3/8"	WD		WD	U2		
U05	B	5'-0"	6'-8"	1 3/8"	WD		WD	U2		
U06	E	3'-0"	8'-0"	1 3/4"	FBG		INSUL. HM	U5		THERMALLY BROKEN, SAFETY GLAZED
U07	D	5'-0"	6'-8"	1 3/8"	WD		WD	U9		
U09	A	1'-0"	6'-8"	1 3/8"	WD		WD	U4		
U10	A	2'-10"	6'-8"	1 3/8"	HM		WD	U6		

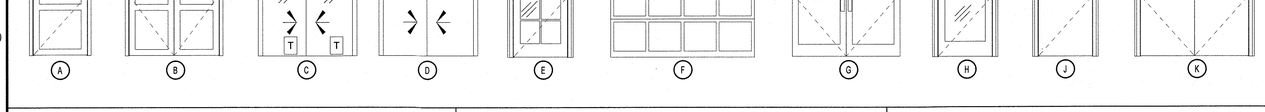

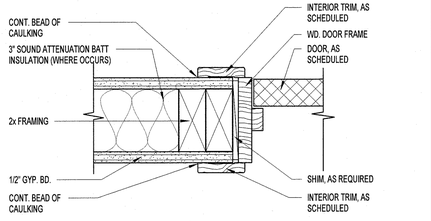

F1 TYPICAL INTERIOR DOOR JAMB DETAIL
3" = 1'-0"

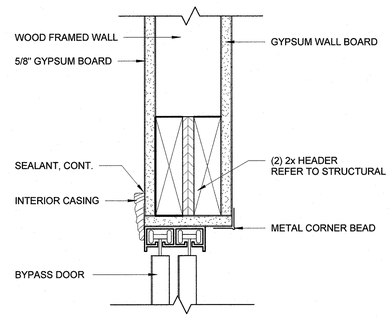

F3 BYPASS DOOR- HEAD DETAIL
3" = 1'-0"

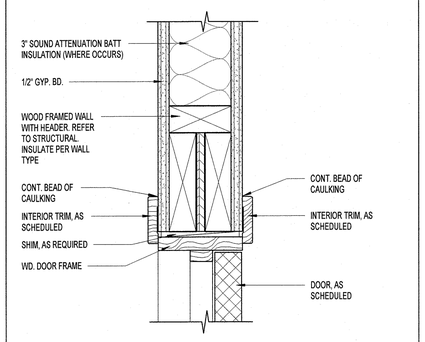

F5 TYP. INTERIOR DOOR HEAD DETAIL
3" = 1'-0"

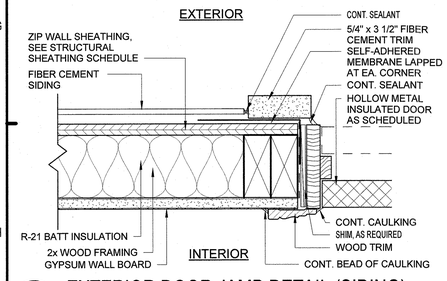

H1 EXTERIOR DOOR JAMB DETAIL (SIDING)
3" = 1'-0"

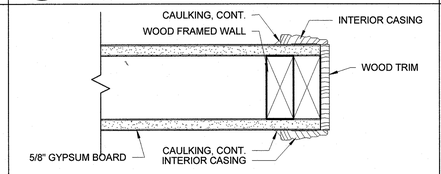

G3 BYPASS DOOR- JAMB DETAIL
3" = 1'-0"

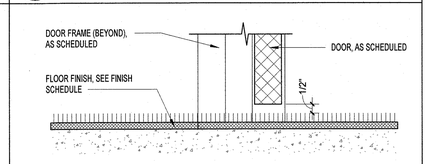

G5 TYP. INTERIOR DOOR THRESHOLD DET.
3" = 1'-0"

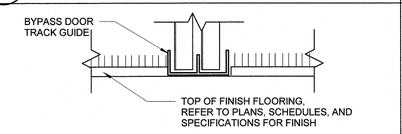

H3 BYPASS DOOR- THRESHOLD DETAIL
3" = 1'-0"

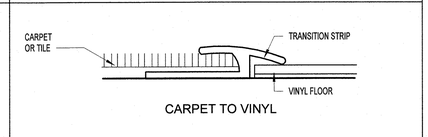

CARPET TO VINYL

H5 TYP. INTERIOR DOOR THRESHOLD DET.
3" = 1'-0"

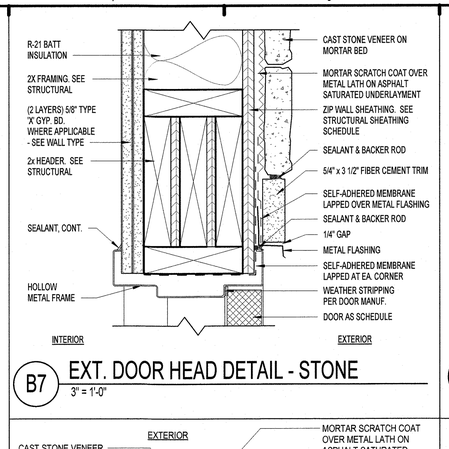

B7 EXT. DOOR HEAD DETAIL - STONE
3" = 1'-0"

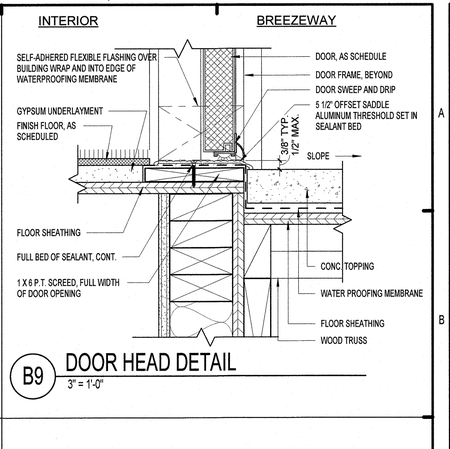

B9 DOOR HEAD DETAIL
3" = 1'-0"

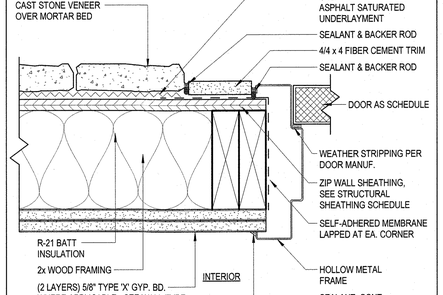

D7 EXT. DOOR JAMB DETAIL-STONE
3" = 1'-0"

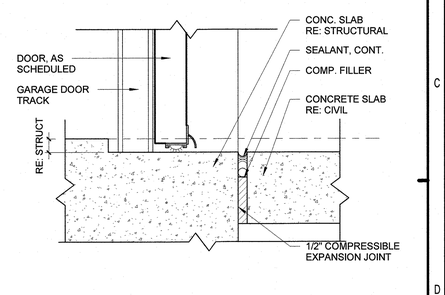

D9 GARAGE DOOR THRESHOLD DETAIL
3" = 1'-0"

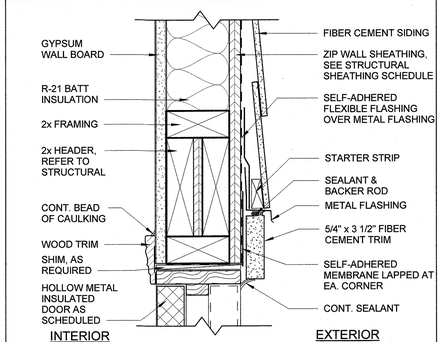

F7 EXT DOOR HEAD DTL (SIDING)
3" = 1'-0"

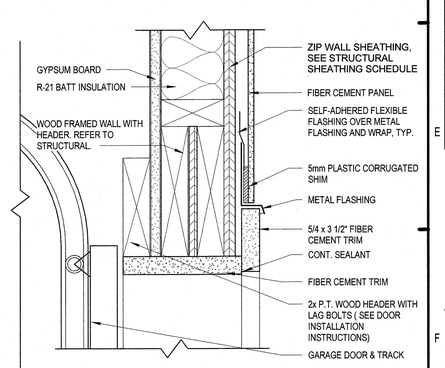

F9 GARAGE DOOR HEAD DETAIL
3" = 1'-0"

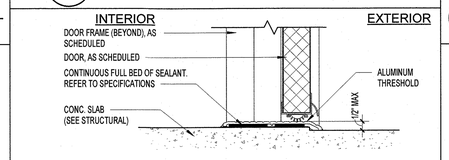

G7 EXTERIOR DOOR THRESHOLD DETAIL
3" = 1'-0"

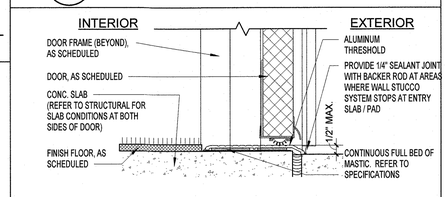

H7 EXTERIOR DOOR THRESHOLD DETAIL
3" = 1'-0"

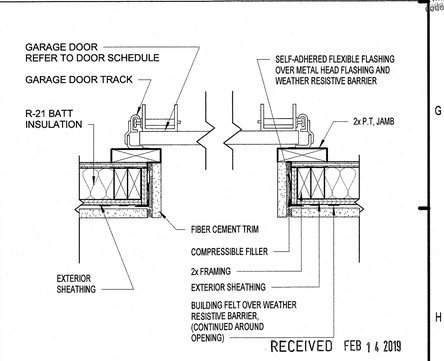

RECEIVED FEB 14 2019

H9 GARAGE DOOR JAMB DETAIL
1 1/2" = 1'-0"

DOOR NOTES:

A. ALL FIRE DOORS AND FRAMES TO HAVE APPROVED CLOSERS AND LATCHING MECHANISMS.
B. THRESHOLDS AT EXTERIOR DOORS ARE NO HIGHER THAN 1/2" MAX.
C. VERIFY ROUGH OPENING REQUIRED WITH DOOR FRAME MANUFACTURER.
D. PROVIDE WEATHERSTRIPING AT ALL EXTERIOR DOORS.
E. DOOR MANUFACTURER SHALL PROVIDE CERTIFICATION, SIGNED AND SEAL BY A REGISTERED **FLORIDA** PROFESSIONAL ENGINEER THAT:
   1- DOORS WILL BE ABLE TO WITHSTAND REQUIRED WIND LOADS AND PRESSURE
   2- TO SUPPLY TYPE AND NUMBER OF FASTENERS REQUIRED TO SECURE FRAME TO HEAD, JAMBS OF ALL DOOR OPENINGS.
F. THE AVERAGE TEMPERATURE RISE DEVELOPED ON THE UNEXPOSED SIDE SHALL NOT EXCEED 450° F (232° C) AT THE END OF 30 MINUTES OF STANDARD FIRE TEST EXPOSURE

HARDWARE NOTES:

A. REFER TO SPECIFICATIONS FOR HARDWARE GROUPS. ALL HARDWARE TO MEET FLORIDA BUILDING CODE REQUIREMENTS AND MEET FAIR HOUSING GUIDELINES FOR ACCESSIBLE AND USABLE DOORS.
B. PRIMARY ENTRY DOORS OF DWELLING UNIT EXTERIOR SIDE, PUBLIC AND COMMON USED DOORS MUST PROVIDE 32" CLEAR WIDTH AND HAVE 1/2" THRESHOLDS.
C. BALCONY DOOR THRESHOLD TO NOT EXCEED 1/2" FOR IMPERVIOUS CONSTRUCTION OF THE WET SIDE.
D. ALL UNITS SHALL HAVE LEVER TYPE HARDWARE ON ALL DOORS. IF CLOSER IS PROVIDED, SHALL NOT BE REQUIRED TO HAVE MORE THAN 5 LBF. TO OPERATE AND CLOSE UNLESS REQUIRED BY LOCAL FIRE AUTHORITY.

PERMIT REVIEW STAMP

ISSUE HISTORY

No.	Date	Description
1	02/08/2019	ISSUE FOR PERMIT

REVISION HISTORY

No.	Date	Description

© 2017 These documents and their contents are the property of FUGLEBERG KOCH ARCHITECTS, and are issued only for the specific project listed on these drawings. Any reproduction, revision or modification of these documents without the expressed written consent of Fugleberg Koch is prohibited by law.

FUGLEBERG KOCH
2555 Temple Trail, Winter Park, FL 32789 (407) 629-0595
www.fuglebergkoch.com AA26002103
CONSULTANT

LAKE COUNTY BUILDING SERVICES
Any errors or omissions in these plans shall be made to conform with the applicable code requirements per Florida Building Code, in accordance with Section 107. Plans were reviewed for code compliance and shall be kept on job site.

MICHAEL E. GOVE, FLORIDA LICENSED ARCHITECT, AR94111, STATE OF FLORIDA, REGISTERED ARCHITECT, 02/08/2019

SUMMER BAY APTS. II	Drawn: Author
LAKE COUNTY, FL	Checked: Checker
	Approved: Approver
	Date: Issue Date
	Project #: 5389
DOOR SCHEDULE AND DETAILS	
A7.01	

PLOTTED: 2/12/2019 9:07:10 AM

WINDOW SCHEDULE

TYPE	WINDOW UNIT			GLAZING				FRAME				REMARKS
	WIDTH	HEIGHT	HEAD HEIGHT	TYPE	THICKNESS	U VALUE	SHGC	MATERIAL	HEAD	JAMB	SILL	
A	3'-0"	5'-0"	8'-0"	LOW-E	3/4"	0.34	0.27	VINYL	D9/A7.02	F7,D9/A7.02	H9/A7.02	
B	2'-6"	5'-0"		LOW-E	3/4"	0.34	0.27	VINYL	D9/A7.02	F7,D9/A7.02	H9/A7.02	

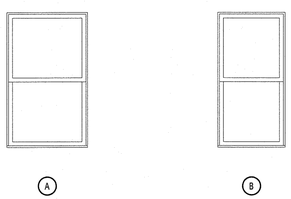

A B

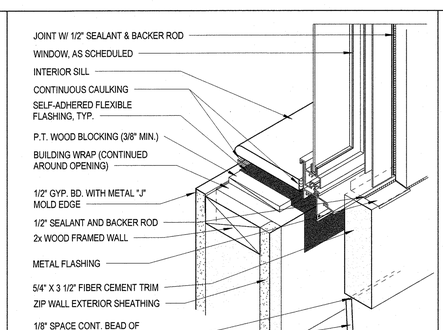

F1 WINDOW SILL ISOMETRIC (SIDING)
3" = 1'-0"

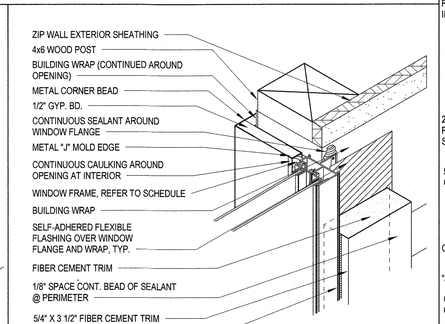

F3 WINDOW JAMB ISOMETRIC (SIDING)
3" = 1'-0"

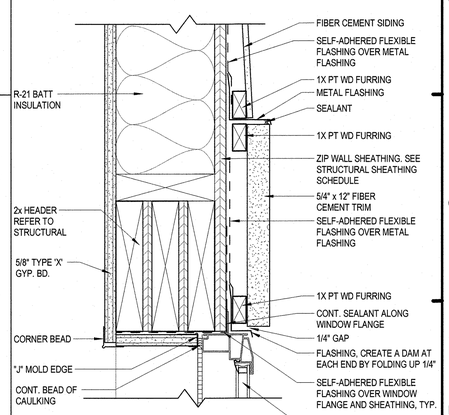

D9 WINDOW HEAD DETAIL (SIDING)
3" = 1'-0"

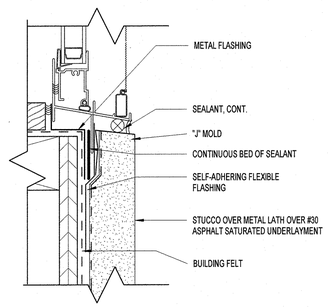

F5 WINDOW SILL FLASHING DETAIL (SIDING)
6" = 1'-0"

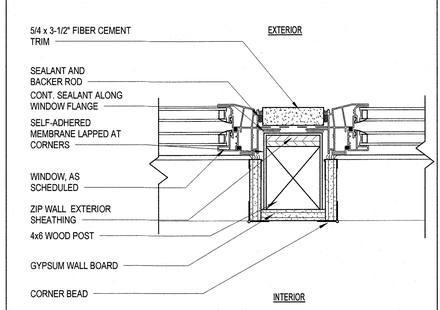

F7 WINDOW JAMB DETAIL
3" = 1'-0"

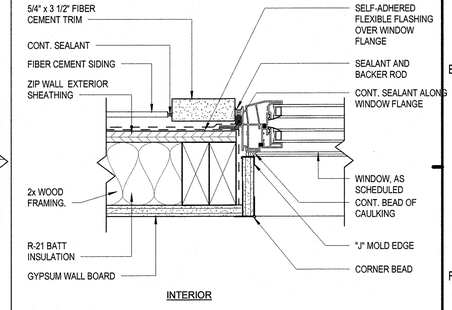

F9 WINDOW JAMB (SIDING)
3" = 1'-0"

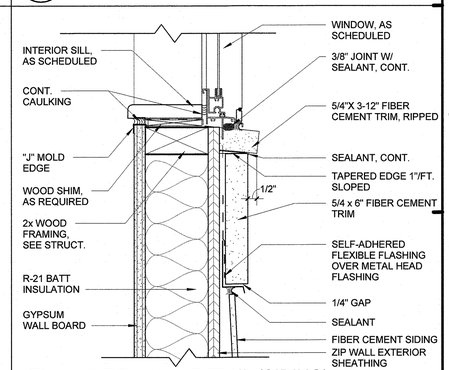

H9 WINDOW SILL DETAIL (SIDING)
3" = 1'-0"

LAKE COUNTY BUILDING SERVICES
Any errors or omissions in these plans shall be made to conform with the applicable code requirements per Florida Building Code, in accordance with Section 107. Plans were reviewed for code compliance and shall be kept on job site.

RECEIVED FEB 14 2019

WINDOW NOTES:

A. VERIFY ROUGH OPENING REQUIRED WITH WINDOW MANUFACTURER.

B. WINDOW MANUFACTURER SHALL PROVIDE CERTIFICATION, SIGNED AND SEAL BY A REGISTERED **FLORIDA** PROFESSIONAL THAT:
   a. WINDOWS WILL BE ABLE TO WITHSTAND REQUIRED WIND LOADS AND PRESSURE.
   b. TO SUPPLY TYPE AND NUMBER OF FASTENERS REQUIRED TO SECURE FRAME TO HEAD, JAMBS & SILL OF ALL WINDOW OPENINGS.

C. PROVIDE SEALANT AT ALL SCREW-HOLES PROVIDED FOR FASTENINGPRIOR TO FASTENER INSTALLATION.

D. WINDOWS UNITS SHALL BE ANCHORED THROUGH THE JAMB, ANCHORS SHALL BE SECURELY FASTENED INTO THE STRUCTURAL MATERIAL

E. PROVIDE TEMPERED GLASS AT ALL WINDOWS LOWER SASH IF SILL HEIGHT IS BELOW 2 FEET; WITHIN 3'-0" OF PATIO DOORS, OR AS OTHERWISE NOTED.

F. PROVIDE FLORIDA TESTED AND APPROVE IMPACT RESISTANT INSULATING GLASS IN COMPLIANCE WITH SPECIFICATION 085313 AND FBC 2014 SECTION 2411.

PERMIT REVIEW STAMP

ISSUE HISTORY

No.	Date	Description
1	02/08/2019	ISSUE FOR PERMIT

REVISION HISTORY

No.	Date	Description

© 2017 These documents are the property of FUGLEBERG KOCH, ADS002202, and are issued only for the specific project listed on these drawings. Any reproductions, revisions, or modifications of these documents without the expressed written consent of Fugleberg Koch is prohibited by law.

FUGLEBERG KOCH
2555 Temple Trail, Winter Park, FL 32789 (407) 629-0595
www.fuglebergkoch.com AA26002103
CONSULTANT

MICHAEL E. GOVE
FLORIDA LICENSE # AR94111
STATE OF FLORIDA
MICHAEL E. GOVE
AR94111
REGISTERED ARCHITECT
02/08/2019

SUMMER BAY APTS. II
LAKE COUNTY, FL

Drawn: Author
Checked: Checker
Approved: Approver
Date: Issue Date
Project #: 5389

WINDOW SCHEDULE AND DETAILS

A7.02

PLOTTED: 2/11/2019 2:45:47 PM

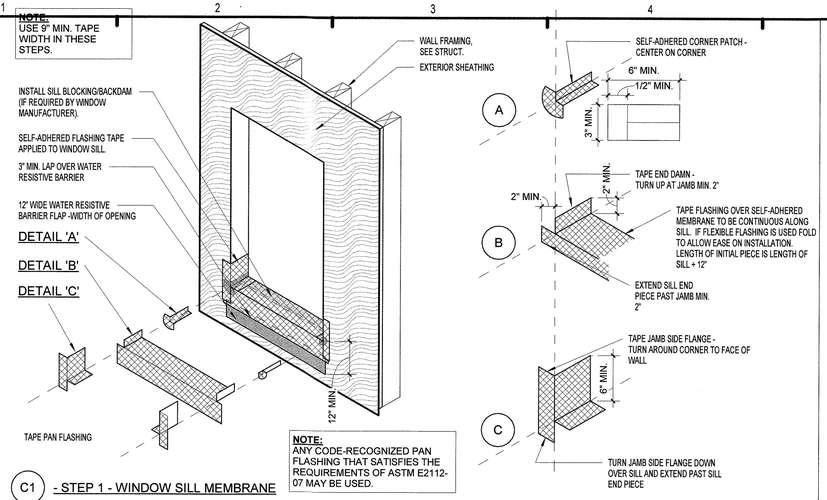

C1 - STEP 1 - WINDOW SILL MEMBRANE

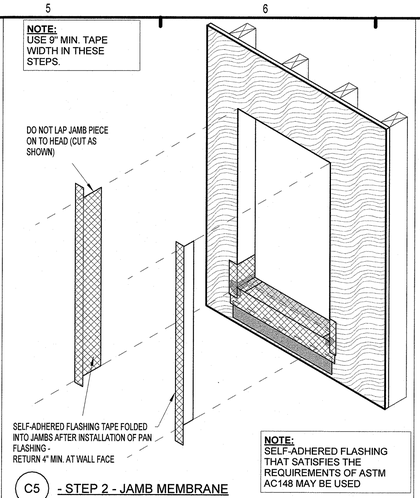

C5 - STEP 2 - JAMB MEMBRANE

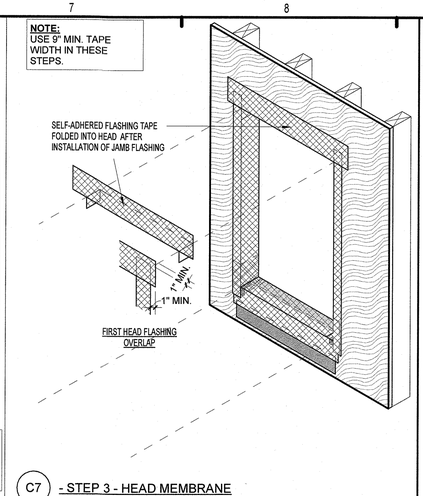

C7 - STEP 3 - HEAD MEMBRANE

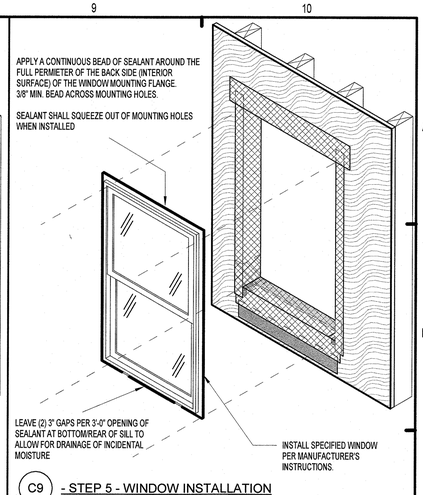

C9 - STEP 5 - WINDOW INSTALLATION

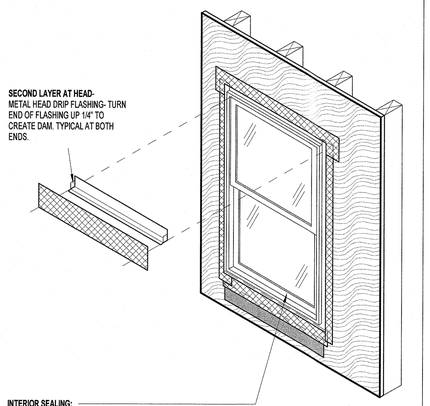

E1 - STEP 6 - WINDOW HEAD FLASHING

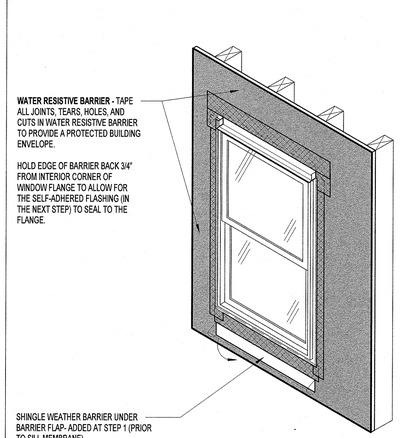

E3 - STEP 7 - WEATHER BARRIER INSTALLATION

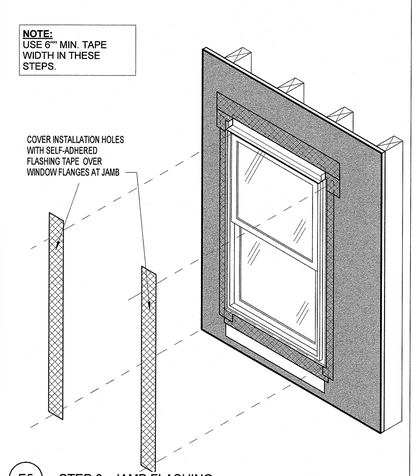

E5 - STEP 8 - JAMB FLASHING

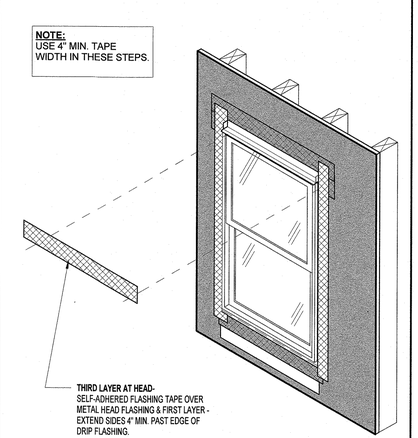

E7 - STEP 9 - HEAD FLASHING

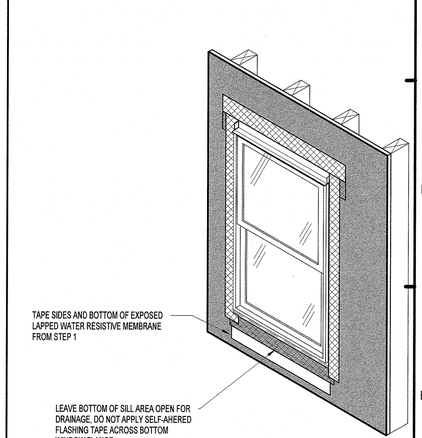

E9 - STEP 10 - COMPLETED WINDOW

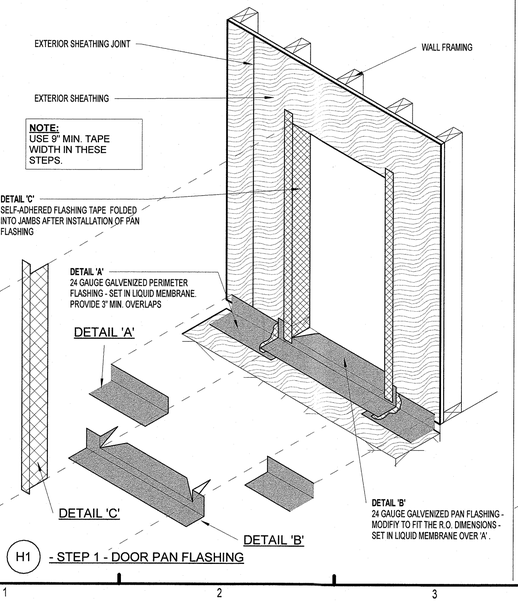

H1 - STEP 1 - DOOR PAN FLASHING

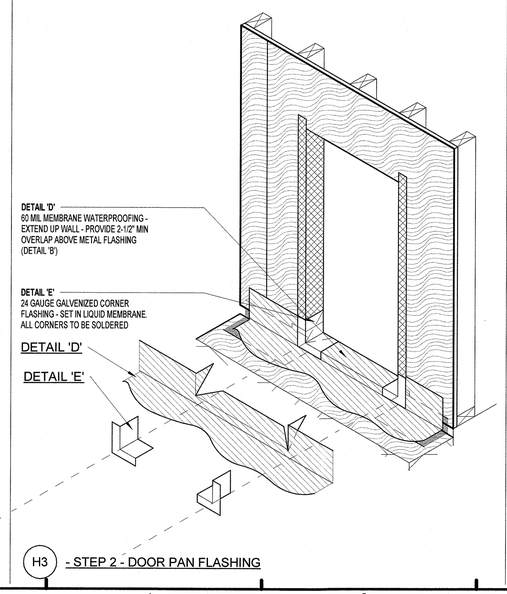

H3 - STEP 2 - DOOR PAN FLASHING

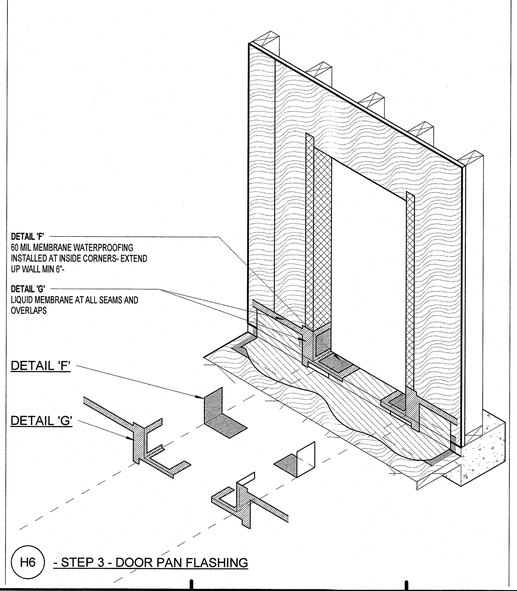

H6 - STEP 3 - DOOR PAN FLASHING

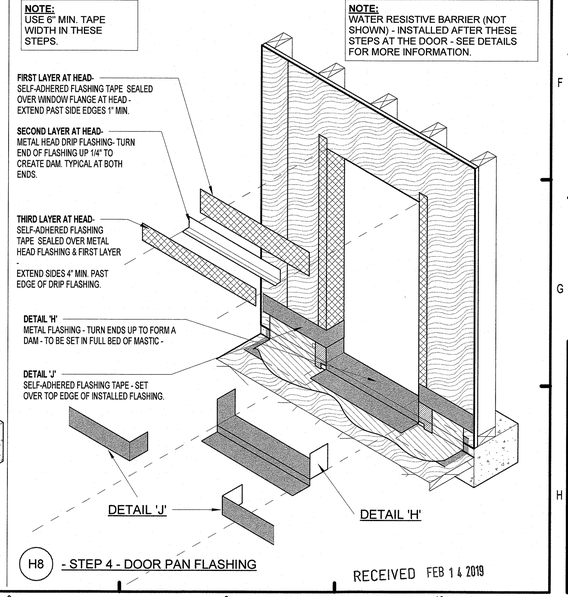

H8 - STEP 4 - DOOR PAN FLASHING

RECEIVED FEB 14 2019

NOTE: ROLL ALL SELF-ADHERED MEMBRANES FLAT WITH HARD FACED ROLLER TO SUBSTRATE OR UNDERLAYMENTS AT EACH STEP OF THE INSTALLATION

PERMIT REVIEW STAMP

ISSUE HISTORY

No.	Date	Description
1	02/08/2019	ISSUE FOR PERMIT

REVISION HISTORY

No.	Date	Description

© 2017 These documents and the contents are the property of FUGLEBERG KOCH - A2600210. All are to be used only for the specific project noted on these drawings. Any reproduction, release, or modification of these documents without the expressed written consent of Fugleberg Koch, is prohibited by law.

FUGLEBERG KOCH
2555 Temple Trail, Winter Park, FL 32789 (407) 629-0595
www.fuglebergkoch.com AA26002103

CONSULTANT

LAKE COUNTY BUILDING SERVICES
Any errors or omissions in these plans shall be made to conform with the applicable code requirements per Florida Building Code, in accordance with Section 107. Plans were reviewed for code compliance and shall be kept on job site.

MICHAEL E. GOVE
FLORIDA LICENSE # AR94111
STATE OF FLORIDA
MICHAEL E. GOVE
AR94111
REGISTERED ARCHITECT
02/08/2019

Drawn:	DM, AW, EB
Checked:	DM
Approval:	PF
Date:	Issue Date
Project #:	5389

SUMMER BAY APTS. II
LAKE COUNTY, FL

WINDOW AND DOOR TAPING PROCEDURES

A7.03

PLOTTED: 2/11/2019 2:45:52 PM

STAIR NOTE

ALL STAIRS AND LANDINGS SHALL BE DESIGNED BY A SPECIALTY ENGINEER. PROVIDE SIGNED AND SEALED DRAWINGS FOR OUR REVIEW. THIS INCLUDES ALL ELEMENTS NECESSARY TO SUPPORT ALL LANDINGS. WOOD WALLS MAY BE BLOCKED FOR LANDING SUPPORT ATTACHMENTS LOCATIONS.

FOUNDATION PLAN NOTES:

1. EL 0'-0" IS FOR REFERENCE ONLY SEE CIVIL FOR TRUE NGVD ELEVATION.
2. TS INDICATES THICKENED SLAB AT STAIRS.
3. VERIFY STEPS AND SLOPES WITH ARCH'L DRAWINGS PRIOR TO CONSTRUCTION. SEE TYPICAL RECESS DETAIL.
4. SEE MECH'L, ELECTRICAL AND PLUMBING (MEP) DRAWINGS FOR LOCATION OF PVC SLEEVES. COORDINATE WITH HVAC CONTRACTOR.
5. MECH'L AND PLUMBING FIXTURES (DUCTS, SINKS, TOILETS AND TUBS) SHOWN ON THESE STRUCTURAL PLANS ARE FOR GENERAL LOCATION PURPOSES ONLY. TRUSS DESIGNER SHALL COORDINATE WITH ARCH'L AND MEP PLANS FOR EXACT LOCATIONS.
6. IF SHEAR WALL CALL OUT EXTENDS OVER AN OPENING, THE OPENING IS PART OF THE SHEARWALL HOLD DOWN ANCHORS ARE INSTALLED AT THE ENDS OF THE SHEARWALL CALLOUTS TYP.
7. SLAB ON GRADE AND FOUNDATIONS ARE TO BE DESIGNED BY A DELEGATED SPECIALTY ENGINEER UTILIZING A MINIMUM OF 4" CONC SLAB-ON-GRADE ON 10 MIL VAPOR BARRIER ON COMPACTED, TREATED SUB-SOIL (TYPICAL). EXTERIOR FOUNDATION EDGES SHALL BE MINIMUM 12" WIDE, AND CHAMPHORED BACK TO SLAB WITH A 45° SLOPE. EXTERIOR EDGES SHALL EXTEND A MINIMUM OF 18" BELOW TOP OF GRADE. ALL INTERIOR THICKENED SLABS BELOW WALLS SHALL BE A MINIMUM OF 12" THICK TYP.
8. UPLIFT FOOTING (NOT SHOWN FOR CLARITY) SHALL BE PROVIDED BELOW EACH END OF SHEAR WALLS PER THE SHEAR WALL SCHEDULE. THESE FOOTINGS ARE INDEPENDENT OF THE POST TENSIONS SYSTEM, AND ALL UPLIFT ANCHORS SHALL EXTEND THROUGH THE P.T. SLAB AND ATTACH TO THESE UPLIFT RESISTING FOUNDATIONS.
9. WP-X INDICATES WOOD POST – SEE WOOD POST SCHEDULE ON SHEET S2.02.

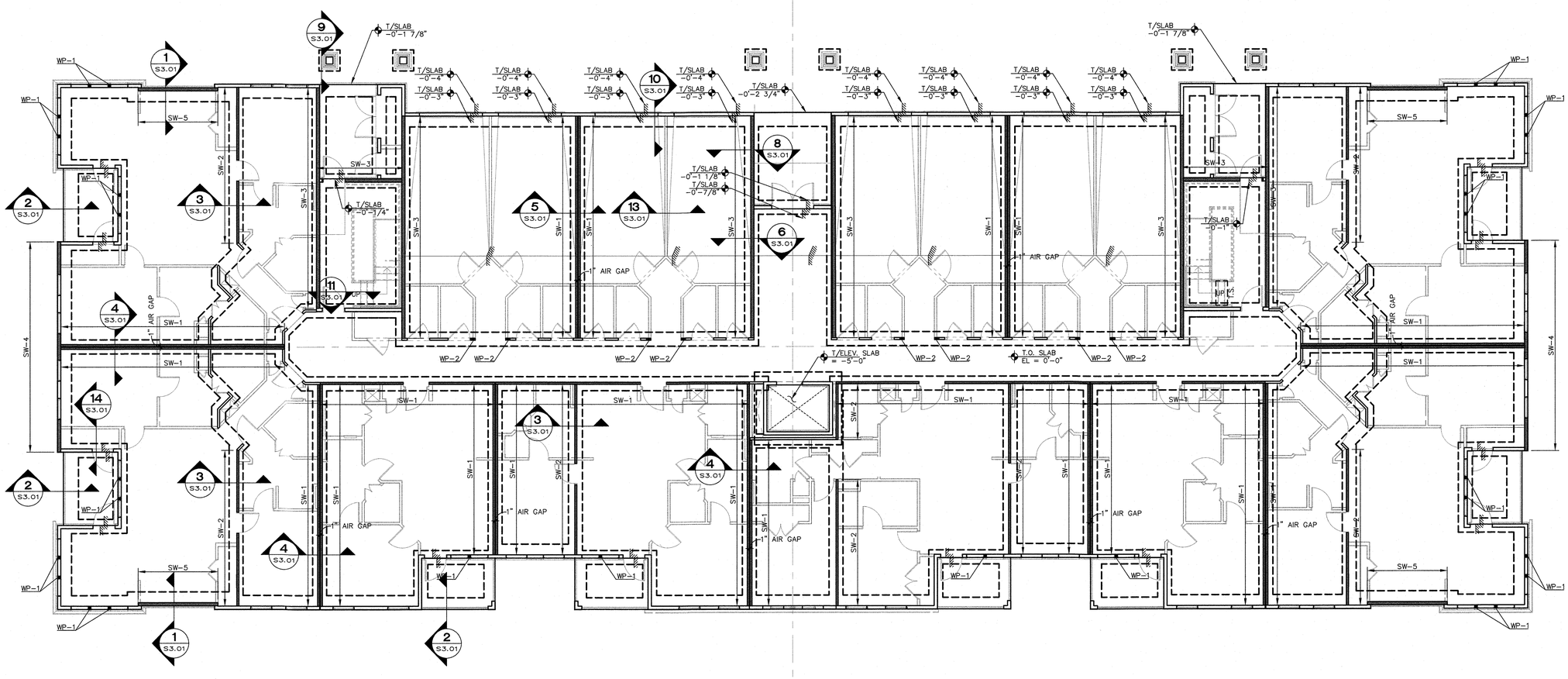

1 BUILDING TYPE 2 - FOUNDATION PLAN
1/8" = 1'-0"

LAKE COUNTY BUILDING SERVICES
Any errors or omissions in these plans shall be made to conform with the applicable code requirements per Florida Building Code, in accordance with Section 107. Plans were reviewed for code compliance and shall be kept on job site.

RECEIVED FEB 14 2019

PERMIT REVIEW STAMP
JOHN SUTHERMAN JR. LICENSE No. 60880 STATE OF FLORIDA PROFESSIONAL ENGINEER

ISSUE HISTORY

No.	Date	Description
1	02/08/2019	ISSUE FOR PERMIT

REVISION HISTORY

No.	Date	Description

©2017 These documents and their contents are the property of FUGLEBERG KOCH - AA26002103, and are issued and/or to be used for the specific project listed on these drawings. Any reproductions, revisions, or modifications of these documents without the expressed written consent of Fugleberg Koch, is prohibited by law.

FUGLEBERG KOCH
2555 Temple Trail, Winter Park, FL 32789 (407) 629-0595
www.fuglebergkoch.com AA26002103

CONSULTANT
GUTHERMAN STRUCTURAL INC.
150 CROWN OAK CENTRE DR.
LONGWOOD FL 32750
P: 407.701.0875 LIC. #28863
Gutherman STRUCTURAL
John Gutherman Jr., P.E.
FL. REG. #60880

SUMMER BAY APTS. II	Drawn: JRIVERA
LAKE COUNTY, FL	Checked: JGUTHERMAN
	Approval: JGUTHERMAN
	Date: 02/08/2019
	Project #: 5389
BUILDING TYPE 2 FOUNDATION PLAN	
S1.06	

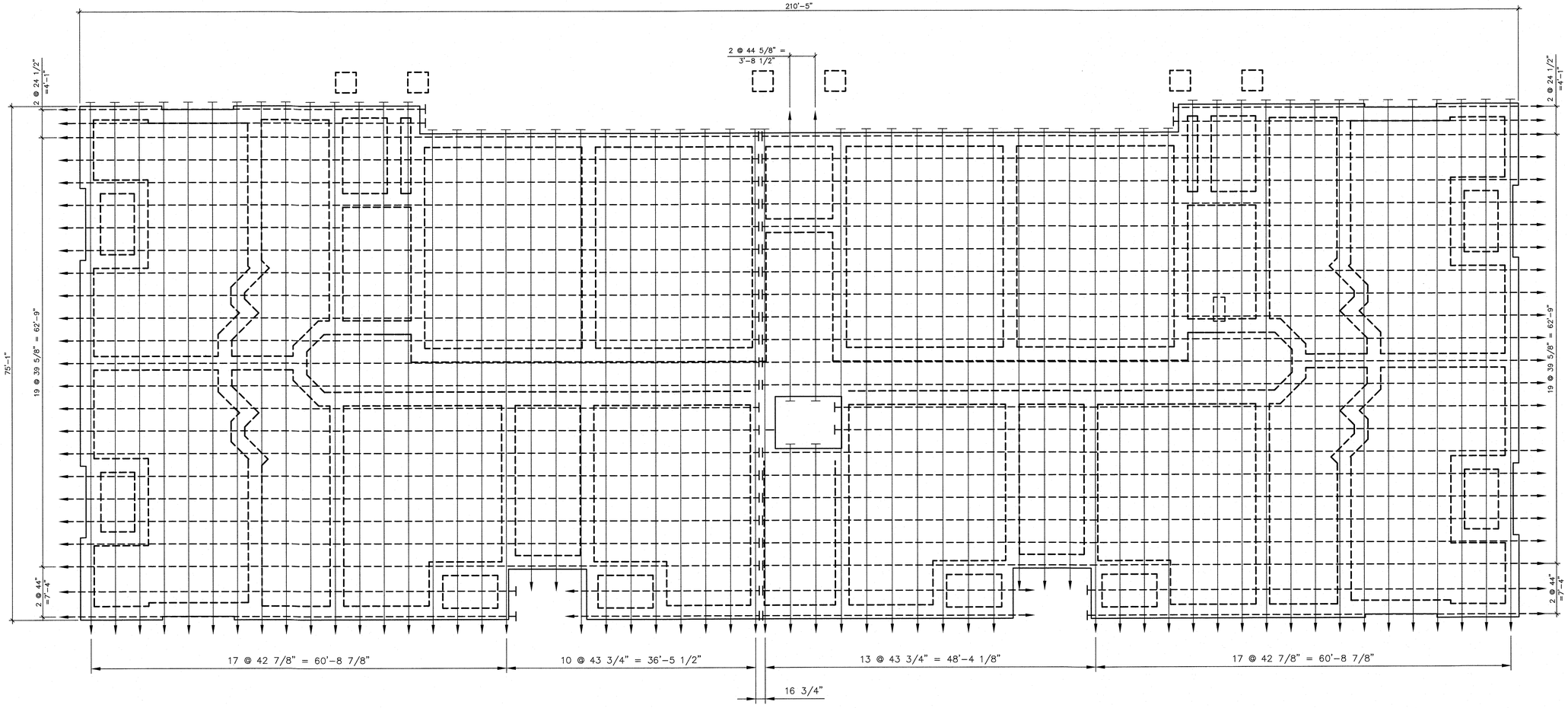

POST TENSION SLAB ON GRADE FOUNDATION IS SHOWN FOR INTENT ONLY. PT DESIGN SHALL BE DONE BY A DELEGATED SPECIALTY POST TENSION ENGINEER WHOM SHALL PROVIDE SIGNED AND SEALED DESIGN AND CALCULATIONS FOR OUR REVIEW. PT ENGINEER SHALL DESIGN THE FOUNDATION PORTION OF THE SLAB TO SUPPORT ALL VERTICAL LOADS AS INDICATED ON THE LOADING PLANS S1.01C AND S1.06C.

1 BUILDING TYPE 2 - POST TENSION PLAN

1/8" = 1'-0"

LAKE COUNTY BUILDING SERVICES
Any errors or omissions in these plans shall be made to conform with the applicable code requirements per Florida Building Code, in accordance with Section 107. Plans were reviewed for code compliance and shall be kept on job site.

RECEIVED FEB 14 2019

PERMIT REVIEW STAMP
JOHN GUTHERMAN JR
LICENSE No. 60880
STATE OF FLORIDA
PROFESSIONAL ENGINEER

ISSUE HISTORY

No.	Date	Description
1	02/08/2019	ISSUE FOR PERMIT

REVISION HISTORY

No.	Date	Description

FUGLEBERG KOCH
2555 Temple Trail, Winter Park, FL 32789 (407) 629-0595
www.fuglebergkoch.com AA26002103

CONSULTANT
GUTHERMAN STRUCTURAL INC.
130 CROWN OAK CENTRE DR.
LONGWOOD FL 32750
P: 407.701.0875 LIC. #28863
Gutherman STRUCTURAL
John Gutherman Jr., P.E.
FL. REG. #60880

© 2017 These documents and their contents are the property of FUGLEBERG KOCH | AA26002103, and are issued only for the specific project noted on these drawings. Any reproductions, revisions, or modifications of these documents without the expressed written consent of Fuglebergkoch, is prohibited by law.

SUMMER BAY APTS. II	Drawn: JRIVERA
LAKE COUNTY, FL	Checked: JGUTHERMAN
	Approved: JGUTHERMAN
	Date: 02/08/2019
	Project #: 5389

BUILDING TYPE 2
POST TENSION PLAN

S1.06a

CONTINUOUS UPLIFT ROD AND SHEAR WALL HOLD DOWN RODS SHALL BE DESIGNED BY A SPECIALTY ROD DELEGATED ENGINEER. UPLIFT ROD ENGINEERING SHALL BE DESIGNED TO SUPPORT ALL SHEAR WALL END REACTIONS, AND TRUSS UPLIFT REACTIONS (UNIFORM RODS). SPECIALTY ENGINEER TO PROVIDE SIGNED AND SEALED DRAWINGS FOR OUR OUR REVIEW. DRAWING PLAN BELOW IS TO SHOW GENERAL INTENT ONLY.

LEGEND

- 6,200 LB UPLIFT CAPACITY ROD (SW-1)
- 12,000 LB UPLIFT CAPACITY ROD (SW-2)
- 7,200 LB UPLIFT CAPACITY ROD (SW-3)
- 16,800 LB UPLIFT CAPACITY ROD (SW-4)
- 23,800 LB UPLIFT CAPACITY ROD (SW-5)
- 1,000 LB UPLIFT CAPACITY FOR ANCHORS

** SEE SHEAR WALL SCHEDULE ON SHEET S2.02 FOR UPLIFT CAPACITY REQUIREMENTS ON EACH FLOOR.

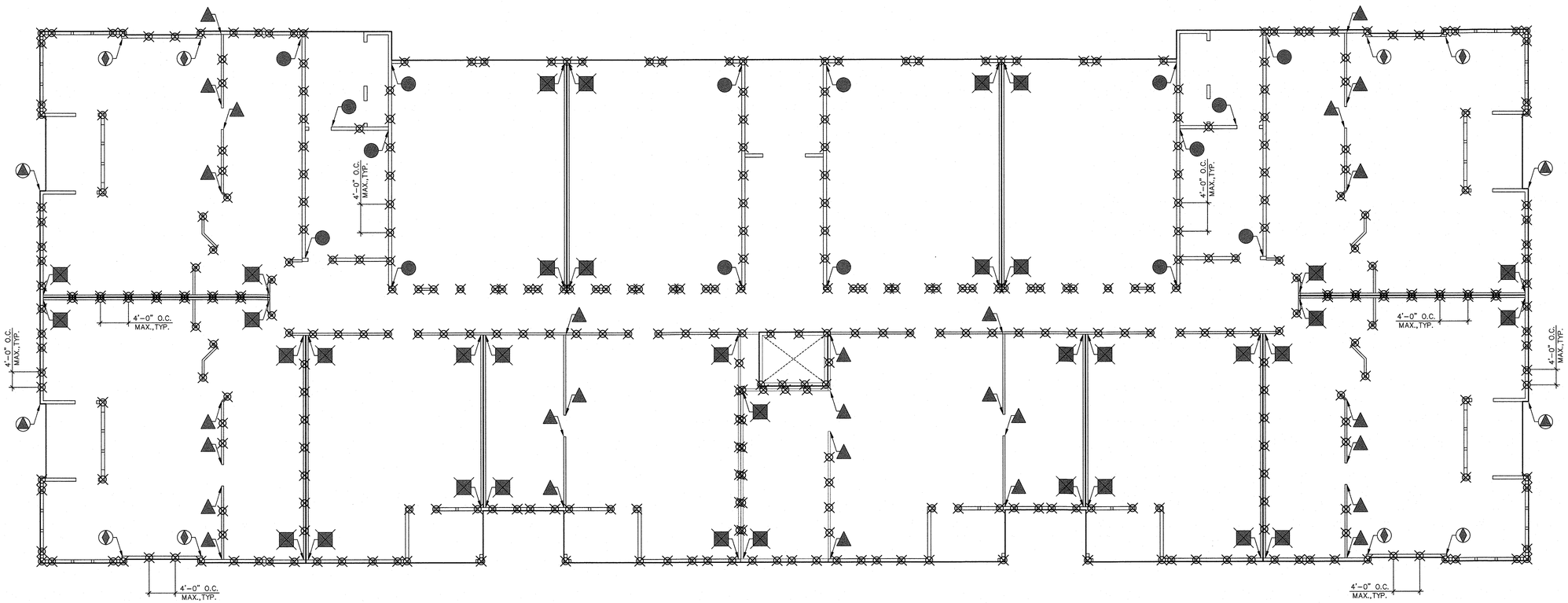

1 BUILDING TYPE 2 - UPLIFT ROD PLAN
1/8" = 1'-0"

LAKE COUNTY BUILDING SERVICES
Any errors or omissions in these plans shall be made to conform with the applicable code requirements per Florida Building Code, in accordance with Section 107. Plans were reviewed for code compliance and shall be kept on job site.

RECEIVED FEB 14 2019

PERMIT REVIEW STAMP
JOHN GUTHERMAN, JR LICENSE No. 60880 STATE OF FLORIDA PROFESSIONAL ENGINEER

ISSUE HISTORY

No.	Date	Description
1	02/08/2019	ISSUE FOR PERMIT

REVISION HISTORY

No.	Date	Description

© 2017 These documents and their contents are the property of FUGLEBERG KOCH - AA26002103, and are issued only for the specific project noted on these drawings. Any reproductions, revisions, or modifications of these documents without the expressed written consent of Fuglebergs Koch, is prohibited by law.

FUGLEBERG KOCH
2555 Temple Trail, Winter Park, FL 32789 (407) 629-0595
www.fuglebergkoch.com AA26002103

CONSULTANT
GUTHERMAN STRUCTURAL INC.
130 CROWN OAK CENTRE DR.
LONGWOOD FL 32750
P: 407.701.0875 LIC. #28863
Gutherman STRUCTURAL
John Gutherman Jr., P.E.
FL. REG. #60880

SUMMER BAY APTS. II
LAKE COUNTY, FL

Drawn:	JRIVERA
Checked:	JGUTHERMAN
Approval:	JGUTHERMAN
Date:	02/08/2019
Project #:	5389

BUILDING TYPE 2
UPLIFT ROD PLAN

S1.06b

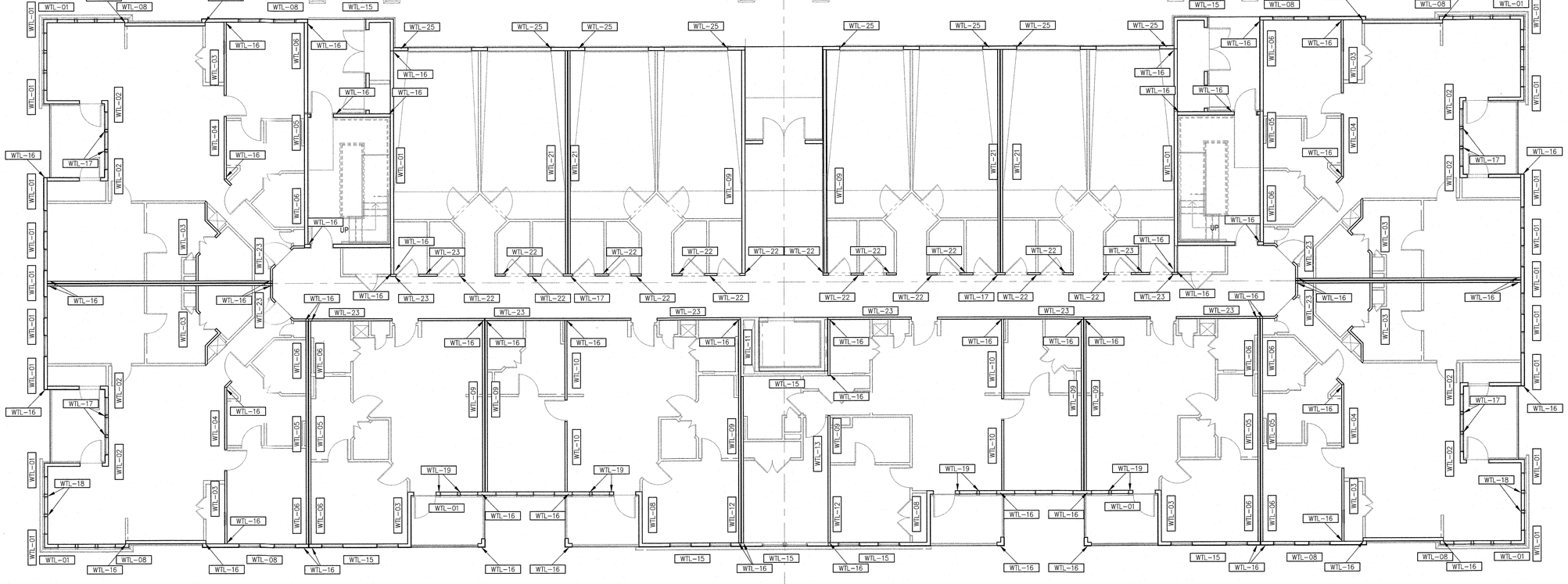

1 BUILDING TYPE 2 - TRUSS TO WALL LOADING PLAN
1/8" = 1'-0"

GRAVITY SCHEDULE

MARK	GRAVITY	MARK	GRAVITY
WTL-01	3,589 LBS	WTL-14	847 PLF
WTL-02	3,427 LBS	WTL-15	1,432 PLF
WTL-03	4,867 LBS	WTL-16	6,698 LBS
WTL-04	3,847 LBS	WTL-17	8,250 LBS
WTL-05	4,639 LBS	WTL-18	8,694 LBS
WTL-06	3,197 LBS	WTL-19	5,655 LBS
WTL-07	4,543 LBS	WTL-20	1,207 PLF
WTL-08	1,549 LBS	WTL-21	5,729 PLF
WTL-09	4,462 LBS	WTL-22	7,864 LBS
WTL-10	3,937 LBS	WTL-23	2,102 PLF
WTL-11	3,579 LBS	WTL-24	14,033 LBS
WTL-12	3,011 LBS	WTL-25	7,017 LBS
WTL-13	3,292 LBS		

P.T. FOUNDATION NOTES:

1. WTL-# (GRAVITY) INDICATES WALL/WOOD POST TOTAL GRAVITY SERVICE REACTION (DEAD AND LIVE) PER WALL/POST AT SHOWN LOCATIONS. P.T. SLAB/FOOTING SHALL BE BY DELEGATE P.T. ENGINEER. P.T. ENGINEER TO PROVIDE SIGNED AND SEALED P.T. DRAWINGS AND CALCULATIONS FOR E.O.R. REVIEW.

LAKE COUNTY BUILDING SERVICES
Any errors or omissions in these plans shall be made to conform with the applicable code requirements per Florida Building Code, in accordance with Section 107. Plans were reviewed for code compliance and shall be kept on job site.

RECEIVED FEB 14 2019

2/14/19
PERMIT REVIEW STAMP
JOHN GUTHERMAN JR. LICENSE No. 60880 STATE OF FLORIDA PROFESSIONAL ENGINEER

ISSUE HISTORY

No.	Date	Description
1	02/08/2019	ISSUE FOR PERMIT

REVISION HISTORY

No.	Date	Description

© 2017 These documents and their contents are the property of FUGLEBERG KOCH + ASSOCIATES, and are issued only for the specific project noted on these drawings. Any reproductions, revisions, or modifications of these documents without the expressed written consent of Fugleberg Koch, is prohibited by law.

FUGLEBERG KOCH
2555 Temple Trail, Winter Park, FL 32789 (407) 629-0595
www.fuglebergkoch.com AA26002103

CONSULTANT
GUTHERMAN STRUCTURAL INC.
130 CROWN OAK CENTRE DR.
LONGWOOD FL 32750
P: 407.701.0875 LIC. #28863
Gutherman STRUCTURAL
John Gutherman Jr., P.E.
FL. REG. #60880

SUMMER BAY APTS. II
LAKE COUNTY, FL

Drawn:	JRIVERA
Checked:	JGUTHERMAN
Approved:	JGUTHERMAN
Date:	02/08/2019
Project #:	5389

BUILDING TYPE 2 - TRUSS TO WALL LOADING PLAN

S1.06c

FLOOR FRAMING PLAN NOTES:

1. WOOD FLOOR TRUSS BEARING ELEVATIONS:
   2ND FLOOR (2ND), EL. = 9'-1 1/8"
   UNLESS NOTED OTHERWISE

2. ——·——·—— INDICATES WOOD FLOOR TRUSS, SEE PLANS.

   —(1)— DENOTES 18" DEEP UNIT WOOD FLOOR TRUSSES AT 24" O.C. W/ 22/32" FLOOR SHEATHING FASTENED W/ 10d RING SHANK NAILS AT 6" O.C. TYP. & GLUE W/ EXTERIOR RATED GLUE. INTERIOR FLOOR SHALL HAVE 3/4" GYP-CRETE TOPPING.

   —(2)— DENOTES SLOPED TOP CHORD WOOD BALCONY FRAMING, SLOPED @ 1/4" PER FOOT AT 24" O.C. W/ 22/32" FLOOR SHEATHING FASTENED W/ 10d RING SHANK NAILS AT 6" O.C. TYP. & GLUE W/ EXTERIOR RATED GLUE. PROVIDE NORMAL WEIGHT 140 PCF - 3" TOPPING SLAB W/ FIBERMESH.

3. "FGT" INDICATES FLOOR GIRDER TRUSS. TRUSS MANUFACTURER'S ENGINEER TO PROVIDE DESIGN. WHERE WALLS SUPPORT GIRDER TRUSSES (FGT) PROVIDE (3) STUDS AT 1ST AND 2ND FLOOR AND (2) STUDS AT 3RD AND 4TH WALLS. PROVIDE SOLID BLOCKING IN TRUSS SPACE.

4. AT TRUSSES THAT RUN PARALLEL WITH SHEAR WALLS LOCATE TRUSS BOTTOM CHORD OVER DOUBLE TOP PLATE OF SHEAR WALL. TRUSS SHALL BE DESIGNED WITH VERTICALS AT 16" O.C. FOR SHEAR WALL SHEATHING ATTACHMENT. AT TRUSSES THAT RUN PERPENDICULAR TO SHEAR WALLS. PROVIDE SOLID 2x BLOCKING AT TOP AND BOTTOM CHORDS OF TRUSS. PROVIDE SHEAR WALL SHEATHING IN TRUSS SPACE. SHEATHING TO MATCH SHEATHING OF SHEAR WALL BELOW.

5. TRUSS MANUFACTURER'S ENGINEER SHALL DESIGN CORRIDOR FLOOR TRUSS SYSTEM FOR MECHANICAL RUNS. COORDINATE WITH MECHANICAL DRAWINGS.

6. SEE MECHANICAL, ELECTRICAL AND PLUMBING (MEP) DRAWINGS FOR LOCATION OF PVC SLEEVES, PLUMBING FIXTURES (SINKS, TOILETS AND TUBS), ELECTRICAL RUNS AND DUCT WORK. COORDINATE WITH TRUSS MANUFACTURER'S ENGINEER.

7. WP-# INDICATES WOOD POST, SEE SCHEDULE ON SHEET S2.02.

8. H-# INDICATES WOOD HEADER, SEE SCHEDULE ON SHEET ON SHEET S2.02.

9. ALL TRUSSES ATTACHED AT STAIR SHAFT WALLS, AND ELEVATOR SHAFT WALLS SHALL BEAR ON LEDGERS ATTACHED TO THE FACE OF THE WALL, NOT ON THE WALLS.

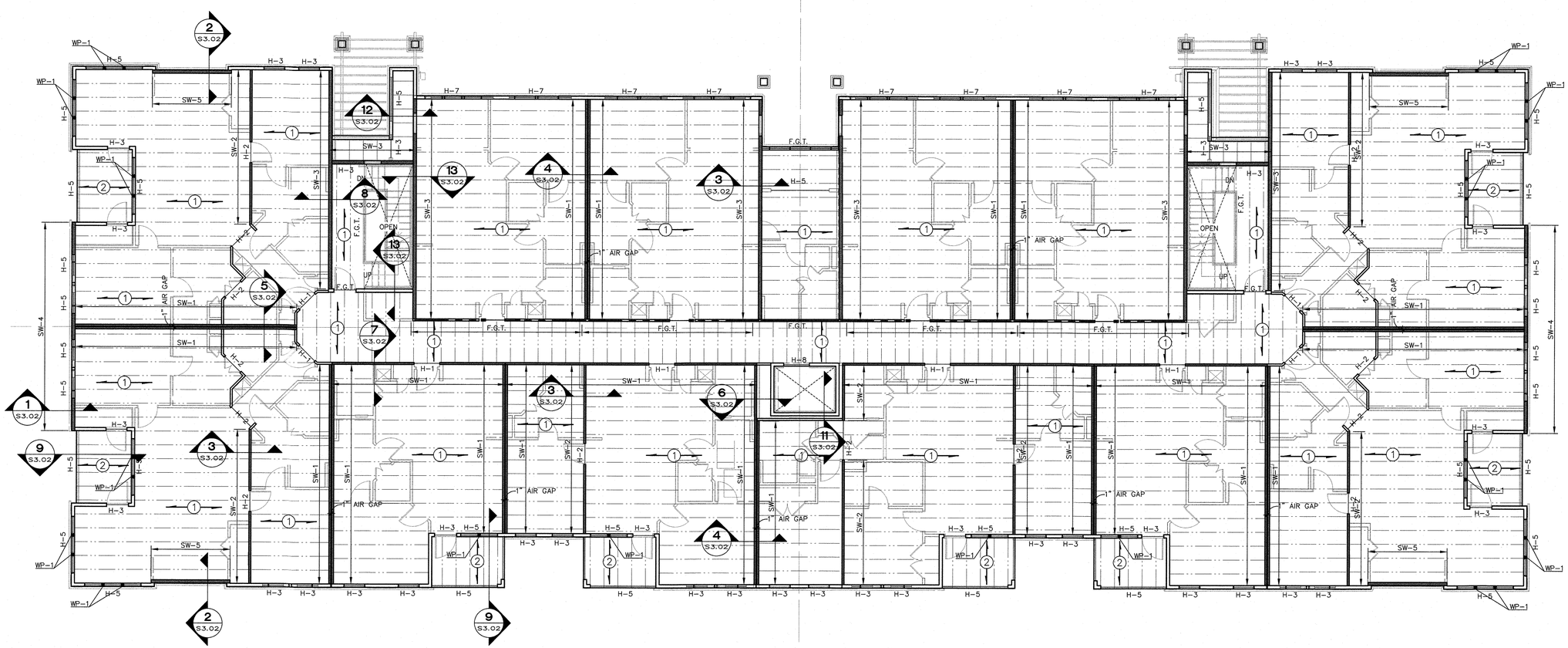

1 BUILDING TYPE 2 - LEVEL 2 FRMAING PLAN
1/8" = 1'-0"

LAKE COUNTY BUILDING SERVICES
Any errors or omissions in these plans shall be made to conform with the applicable code requirements per Florida Building Code, in accordance with Section 107. Plans were reviewed for code compliance and shall be kept on job site.

RECEIVED FEB 14 2019

1/21/19
PERMIT REVIEW STAMP
JOHN GUTHERMAN JR
LICENSE
No. 60880
STATE OF
FLORIDA
PROFESSIONAL ENGINEER

ISSUE HISTORY

No.	Date	Description
1	02/08/2019	ISSUE FOR PERMIT

REVISION HISTORY

No.	Date	Description

© 2017 These documents are the property of FUGLEBERG KOCH - AA26002103 and are issued only for the specific project listed on these drawings. Any reproductions, revisions, or modifications of these documents without the expressed written consent of Fugleberg Koch, is prohibited by law.

FUGLEBERG KOCH
2555 Temple Trail, Winter Park, FL 32789 (407) 629-0595
www.fuglebergkoch.com AA26002103

CONSULTANT
GUTHERMAN STRUCTURAL INC.
130 CROWN OAK CENTRE DR.
LONGWOOD FL 32750
P: 407.701.0875 LIC. #28863
Gutherman STRUCTURAL
John Gutherman Jr., P.E.
FL. REG. #60880

SUMMER BAY APTS. II
LAKE COUNTY, FL

Drawn:	JRIVERA
Checked:	JGUTHERMAN
Approved:	JGUTHERMAN
Date:	02/08/2019
Project #:	5389

BUILDING TYPE 2 LEVEL 2 FRAMING PLAN

S1.07

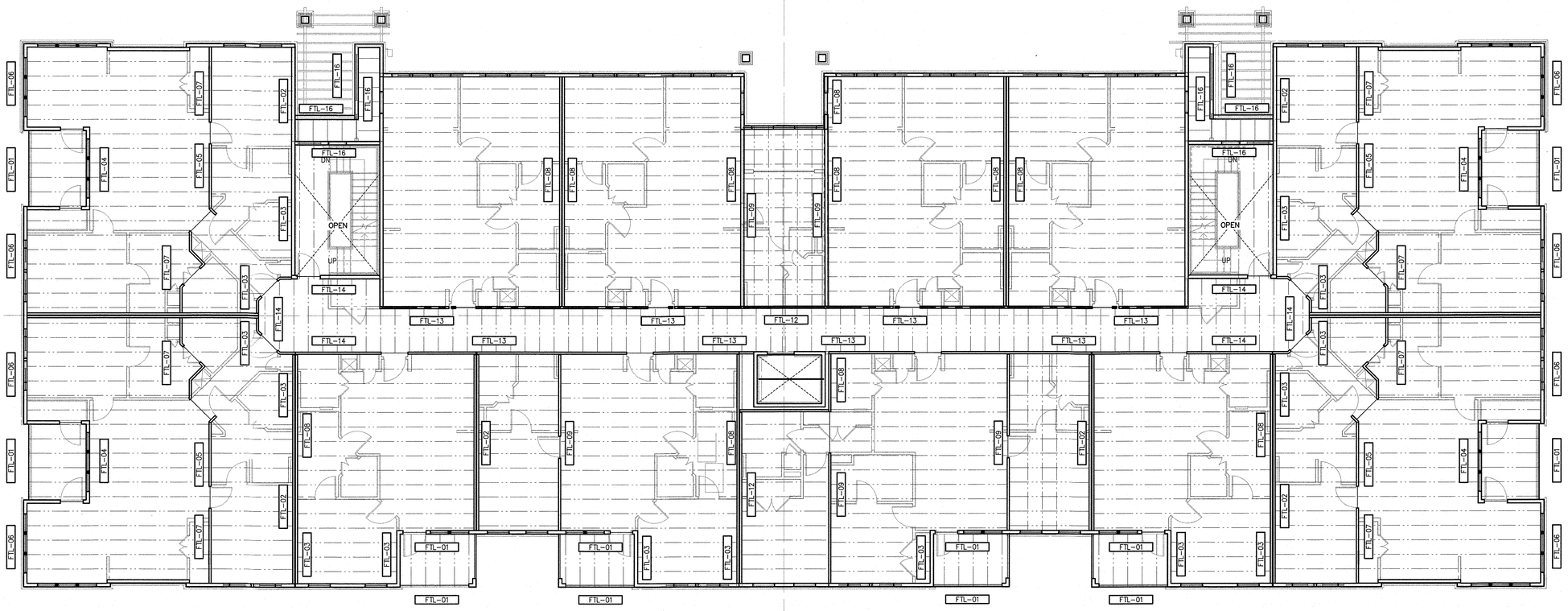

GRAVITY SCHEDULE

MARK	GRAVITY (LBS)
FTL-01	680
FTL-02	748
FTL-03	927
FTL-04	1785
FTL-05	1842
FTL-06	1658
FTL-07	2405
FTL-08	1609
FTL-09	2405
FTL-10	1723
FTL-11	2102
FTL-12	802
FTL-13	412
FTL-14	650
FTL-15	520
FTL-16	260

FLOOR NOTES:

1. FTL-# (GRAVITY) INDICATES FLOOR TOTAL GRAVITY SERVICE REACTION (DEAD AND LIVE) PER TRUSS.

1 BUILDING TYPE 2 - TRUSS LOADING PLAN

1/8" = 1'-0"

LAKE COUNTY BUILDING SERVICES
Any errors or omissions in these plans shall be made to conform with the applicable code requirements per Florida Building Code, in accordance with Section 107. Plans were reviewed for code compliance and shall be kept on job site.

RECEIVED FEB 14 2019

RECEIVED FEB 14 2019

2/14/19

PERMIT REVIEW STAMP

JOHN GUTHERMAN, JR. LICENSE No. 60880 STATE OF FLORIDA PROFESSIONAL ENGINEER

ISSUE HISTORY

No.	Date	Description
1	02/08/2019	ISSUE FOR PERMIT

REVISION HISTORY

No.	Date	Description

© 2017 These documents and their contents are the property of FUGLEBERG KOCH + ASSOCIATES, and are issued only for the specific project noted on these drawings. Any reproductions, revisions, or modifications of these documents without the expressed written consent of Fuglebergs Koch, is prohibited by law.

FUGLEBERG KOCH

2555 Temple Trail, Winter Park, FL 32789 (407) 629-0595
www.fuglebergkoch.com AA26002103

CONSULTANT

GUTHERMAN STRUCTURAL INC.
190 CROWN OAK CENTRE DR.
LONGWOOD FL 32750
P: 407.701.0875 LIC. #28863

Gutherman STRUCTURAL

John Gutherman Jr., P.E.
FL. REG. #60880

SUMMER BAY APTS. II

LAKE COUNTY, FL

Drawn:	JRIVERA
Checked:	JGUTHERMAN
Approval:	JGUTHERMAN
Date:	02/08/2019
Project #:	5389

BUILDING TYPE 2
TRUSS LOADING PLAN

S1.07a

FLOOR FRAMING PLAN NOTES:

1. WOOD FLOOR TRUSS BEARING ELEVATIONS:
   THIRD FLOOR (3RD), EL. = 19'-9"
   UNLESS NOTED OTHERWISE

2. ——·——·—— INDICATES WOOD FLOOR TRUSS, SEE PLANS.

   ——(1)—— DENOTES 18" DEEP UNIT WOOD FLOOR TRUSSES AT 24" O.C. W/ 22/32" FLOOR SHEATHING FASTENED W/ 10d RING SHANK NAILS AT 6" O.C. TYP. & GLUE W/ EXTERIOR RATED GLUE. INTERIOR FLOOR SHALL HAVE 3/4" GYP-CRETE TOPPING.

   ——(2)—— DENOTES SLOPED TOP CHORD WOOD BALCONY FRAMING, SLOPED @ 1/4" PER FOOT AT 24" O.C. W/ 22/32" FLOOR SHEATHING FASTENED W/ 10d RING SHANK NAILS AT 6" O.C. TYP. & GLUE W/ EXTERIOR RATED GLUE. PROVIDE NORMAL WEIGHT 140 PCF – 3" TOPPING SLAB W/ FIBERMESH.

3. "FGT" INDICATES FLOOR GIRDER TRUSS. TRUSS MANUFACTURER'S ENGINEER TO PROVIDE DESIGN. WHERE WALLS SUPPORT GIRDER TRUSSES (FGT) PROVIDE (3) STUDS AT 1ST AND 2ND FLOOR AND (2) STUDS AT 3RD AND 4TH WALLS. PROVIDE SOLID BLOCKING IN TRUSS SPACE.

4. AT TRUSSES THAT RUN PARALLEL WITH SHEAR WALLS LOCATE TRUSS BOTTOM CHORD OVER DOUBLE TOP PLATE OF SHEAR WALL. TRUSS SHALL BE DESIGNED WITH VERTICALS AT 16" O.C. FOR SHEAR WALL SHEATHING ATTACHMENT. AT TRUSSES THAT RUN PERPENDICULAR TO SHEAR WALLS. PROVIDE SOLID 2x BLOCKING AT TOP AND BOTTOM CHORDS OF TRUSS. PROVIDE SHEAR WALL SHEATHING IN TRUSS SPACE. SHEATHING TO MATCH SHEATHING OF SHEAR WALL BELOW.

5. TRUSS MANUFACTURER'S ENGINEER SHALL DESIGN CORRIDOR FLOOR TRUSS SYSTEM FOR MECHANICAL RUNS. COORDINATE WITH MECHANICAL DRAWINGS.

6. SEE MECHANICAL, ELECTRICAL AND PLUMBING (MEP) DRAWINGS FOR LOCATION OF PVC SLEEVES, PLUMBING FIXTURES (SINKS, TOILETS AND TUBS), ELECTRICAL RUNS AND DUCT WORK. COORDINATE WITH TRUSS MANUFACTURER'S ENGINEER.

7. WP–# INDICATES WOOD POST, SEE SCHEDULE ON SHEET S2.02.

8. H–# INDICATES WOOD HEADER, SEE SCHEDULE ON SHEET ON SHEET S2.02.

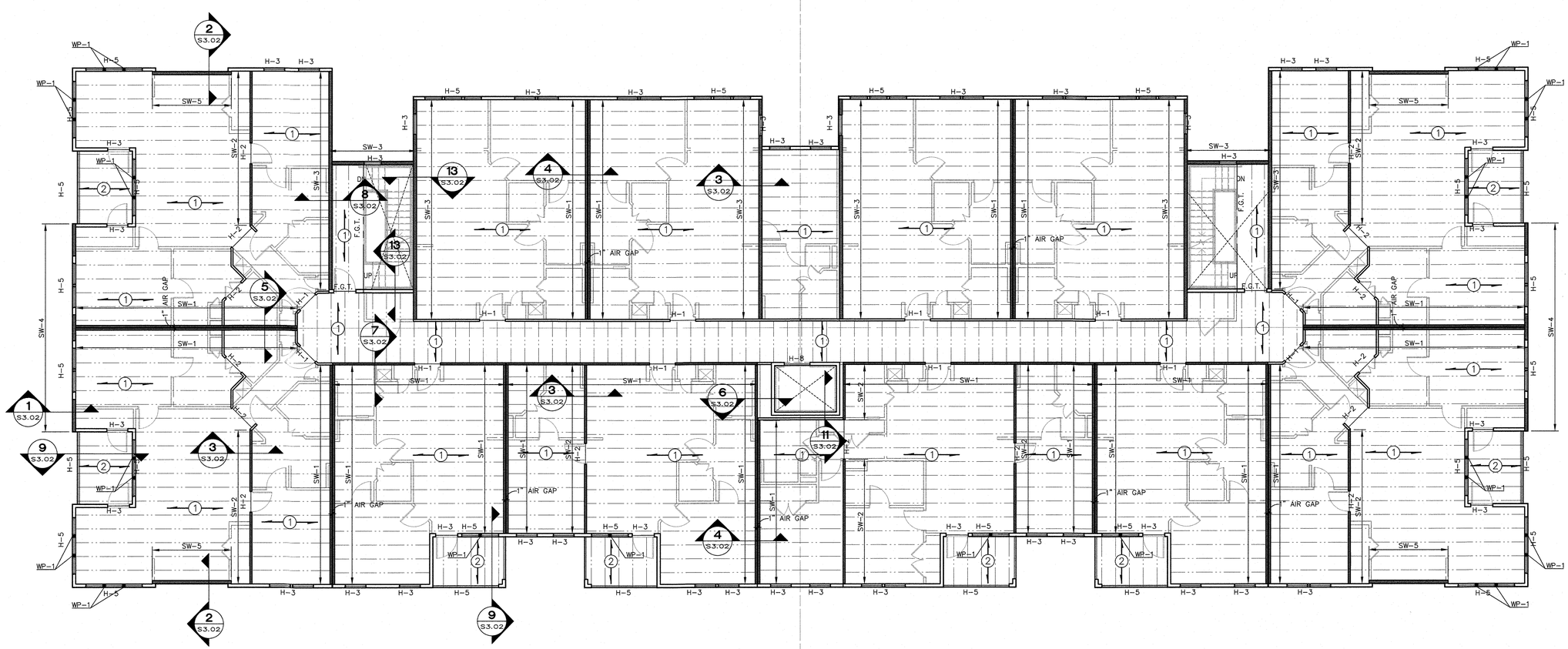

1 BUILDING TYPE 2 - LEVEL 3 FRAMING PLAN
1/8" = 1'-0"

LAKE COUNTY BUILDING SERVICES
Any errors or omissions in these plans shall be made to conform with the applicable code requirements per Florida Building Code, in accordance with Section 107. Plans were reviewed for code compliance and shall be kept on job site.

RECEIVED FEB 14 2019

JOHN GUTHERMAN JR. PERMIT REVIEW STAMP LICENSE No. 60880 STATE OF FLORIDA PROFESSIONAL ENGINEER

ISSUE HISTORY

No.	Date	Description
1	02/08/2019	ISSUE FOR PERMIT

REVISION HISTORY

No.	Date	Description

© 2017 These documents and their contents are the property of FUGLEBERG KOCH - AA26002103 and are issued only for the specific project noted on these drawings. Any reproductions, revisions, or modifications of these documents without the expressed written consent of Fugleberg Koch, is prohibited by law.

FUGLEBERG KOCH
2555 Temple Trail, Winter Park, FL 32789 (407) 629-0595
www.fuglebergkoch.com AA26002103

CONSULTANT
GUTHERMAN STRUCTURAL INC.
190 CROWN OAK CENTRE DR.
LONGWOOD FL 32750
P: 407.701.0875 LIC. #28863
Gutherman STRUCTURAL
John Gutherman Jr., P.E.
FL. REG. #60880

SUMMER BAY APTS. II
LAKE COUNTY, FL

Drawn:	JRIVERA
Checked:	JGUTHERMAN
Approval:	JGUTHERMAN
Date:	02/08/2019
Project #:	5389

BUILDING TYPE 2 - LEVEL 3 FRAMING PLAN

S1.08

FLOOR FRAMING PLAN NOTES:

1. WOOD FLOOR TRUSS BEARING ELEVATIONS:
   FOURTH FLOOR (4TH), EL. = 30'-4 7/8"
   UNLESS NOTED OTHERWISE

2. ——— INDICATES WOOD FLOOR TRUSS, SEE PLANS.

   (1) DENOTES 18" DEEP UNIT WOOD FLOOR TRUSSES AT 24" O.C. W/ 22/32" FLOOR SHEATHING FASTENED W/ 10d RING SHANK NAILS AT 6" O.C. TYP. & GLUE W/ EXTERIOR RATED GLUE. INTERIOR FLOOR SHALL HAVE 3/4" GYP-CRETE TOPPING.

   (2) DENOTES SLOPED TOP CHORD WOOD BALCONY FRAMING, SLOPED @ 1/4" PER FOOT AT 24" O.C. W/ 22/32" FLOOR SHEATHING FASTENED W/ 10d RING SHANK NAILS AT 6" O.C. TYP. & GLUE W/ EXTERIOR RATED GLUE. PROVIDE NORMAL WEIGHT 140 PCF – 3" TOPPING SLAB W/ FIBERMESH.

3. "FGT" INDICATES FLOOR GIRDER TRUSS. TRUSS MANUFACTURER'S ENGINEER TO PROVIDE DESIGN. WHERE WALLS SUPPORT GIRDER TRUSSES (FGT) PROVIDE (3) STUDS AT 1ST AND 2ND FLOOR AND (2) STUDS AT 3RD AND 4TH WALLS. PROVIDE SOLID BLOCKING IN TRUSS SPACE.

4. AT TRUSSES THAT RUN PARALLEL WITH SHEAR WALLS LOCATE TRUSS BOTTOM CHORD OVER DOUBLE TOP PLATE OF SHEAR WALL. TRUSS SHALL BE DESIGNED WITH VERTICALS AT 16" O.C. FOR SHEAR WALL SHEATHING ATTACHMENT. AT TRUSSES THAT RUN PERPENDICULAR TO SHEAR WALLS. PROVIDE SOLID 2x BLOCKING AT TOP AND BOTTOM CHORDS OF TRUSS. PROVIDE SHEAR WALL SHEATHING IN TRUSS SPACE. SHEATHING TO MATCH SHEATHING OF SHEAR WALL BELOW.

5. TRUSS MANUFACTURER'S ENGINEER SHALL DESIGN CORRIDOR FLOOR TRUSS SYSTEM FOR MECHANICAL RUNS. COORDINATE WITH MECHANICAL DRAWINGS.

6. SEE MECHANICAL, ELECTRICAL AND PLUMBING (MEP) DRAWINGS FOR LOCATION OF PVC SLEEVES, PLUMBING FIXTURES (SINKS, TOILETS AND TUBS), ELECTRICAL RUNS AND DUCT WORK. COORDINATE WITH TRUSS MANUFACTURER'S ENGINEER.

7. WP-# INDICATES WOOD POST, SEE SCHEDULE ON SHEET S2.02.

8. H-# INDICATES WOOD HEADER, SEE SCHEDULE ON SHEET ON SHEET S2.02.

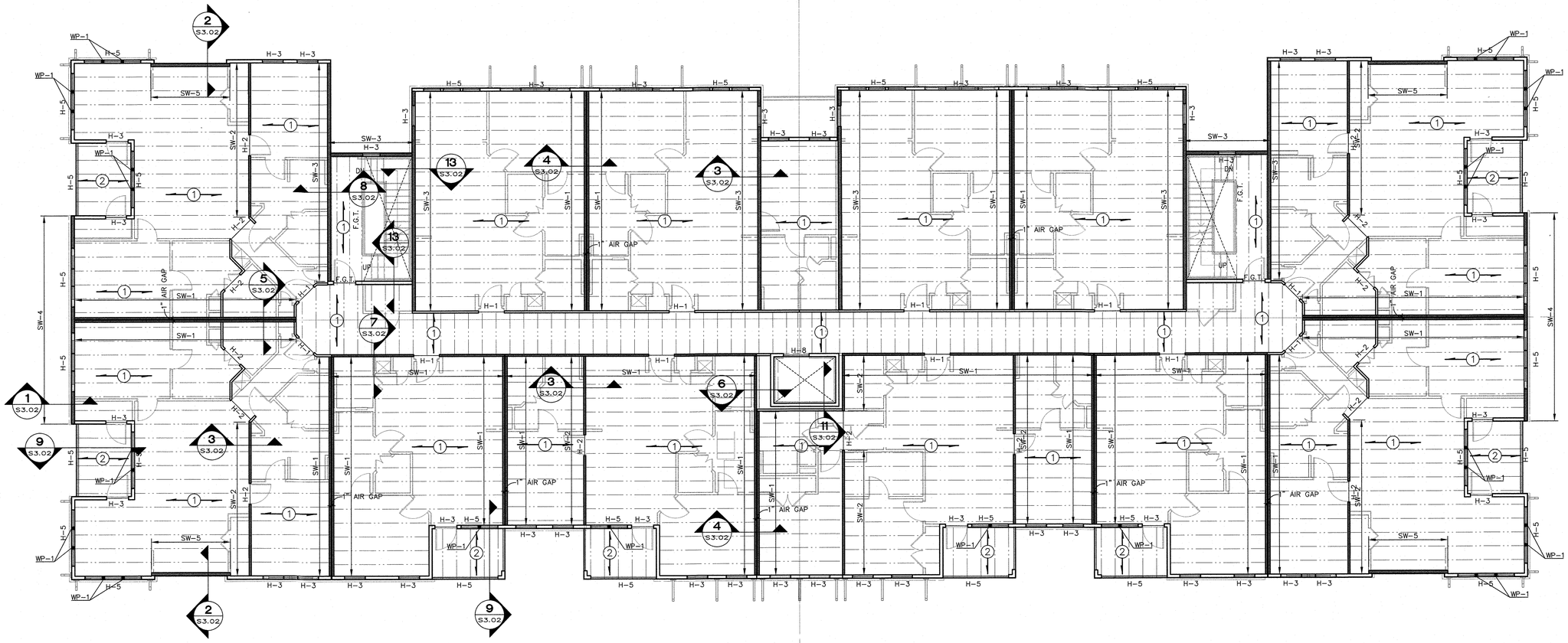

LAKE COUNTY BUILDING SERVICES
Any errors or omissions in these plans shall be made to conform with the applicable code requirements per Florida Building Code, in accordance with Section 107. Plans were reviewed for code compliance and shall be kept on job site.

1 BUILDING TYPE 2 - LEVEL 4 FRAMING PLAN
1/8" = 1'-0"

RECEIVED FEB 14 2019

2/14/19

PERMIT REVIEW STAMP
JOHN GUTHERMAN, JR.
LICENSE
No. 60880
STATE OF
FLORIDA
PROFESSIONAL ENGINEER

ISSUE HISTORY

No.	Date	Description
1	02/08/2019	ISSUE FOR PERMIT

REVISION HISTORY

No.	Date	Description

© 2017 These documents and their contents are the property of FUGLEBERG KOCH - AA26002103, and are issued only for the specific project stated on these drawings. Any reproductions, revisions, or modifications of these documents without the expressed written consent of Fuglebergkoch, is prohibited by law.

FUGLEBERG KOCH
2555 Temple Trail, Winter Park, FL 32789 (407) 629-0595
www.fuglebergkoch.com AA26002103

CONSULTANT
GUTHERMAN STRUCTURAL INC.
150 CROWN OAK CENTRE DR.
LONGWOOD FL 32750
P: 407.701.0875 LIC. #28863
Gutherman STRUCTURAL
John Gutherman Jr., P.E.
FL. REG. #60880

SUMMER BAY APTS. II
LAKE COUNTY, FL

Drawn:	JRIVERA
Checked:	JGUTHERMAN
Approval:	JGUTHERMAN
Date:	02/08/2019
Project #:	5389

BUILDING TYPE 2 - LEVEL 4 FRAMING PLAN

S1.09

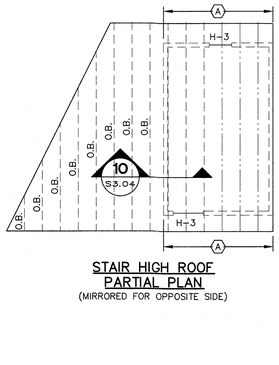

STAIR HIGH ROOF
PARTIAL PLAN
(MIRRORED FOR OPPOSITE SIDE)

ROOF FRAMING NOTES:

1. TRUSS BEARING ELEVATION IS +41'-1" U.N.O.
2. ROOF WOOD TRUSSES SHALL BE SPACED 2'-0" O.C. MAX.
3. G.T. INDICATES ROOF GIRDER TRUSS BY TRUSS MANUFACTURER.
4. H-# INDICATES WOOD HEADER, SEE SCHEDULE ON SHEET S2.02.
5. ROOF SHEATHING SHALL BE 15/32" O.S.B. SHEATHING, ATTACH SHEATHING WITH 8d NAILS AT 6" O.C. AT EDGES AND 12" O.C. AT ALL OTHER SUPPORTS.
6. RUNS FOR MECH'L, ELECTRICAL AND PLUMBING (MEP) THROUGH PRE-FABRICATED TRUSSES MUST BE COORDINATED WITH THE TRUSS DESIGNER AND MEP DWGS. (PIPING, DUCT RUNS, ETC.) FIRE SRPINKLER RUNS MUST ALSO BE COORDINATED.
7. FRAMING CONTRACTOR AND HVAC CONTRACTOR TO COORDINATE DUCT LOCATIONS PRIOR TO TRUSS FABRICATION.
8. ALL TRUSS UPLIFT CONNECTORS SHALL BE (B) U.N.O.
9. PROVIDE SIMPSON LGT2 TYP. FOR ALL G.T. UPLIFT CONNECTIONS WITH (3) STUDS BELOW TO GROUND, TYP..

"SIMPSON" TRUSS TIE DOWN (U.N.O.)

MARK	ANCHOR TYPE	NAILS TO TRUSS	NAILS TO PLATE	NAILS TO STUD	BOLTS	ALLOWABLE UPLIFT	LATERAL LOAD PARALLEL TO WALL	LATERAL LOAD PERPEND. TO WALL
(A)	H2.5A	5-8d	5-8d	5-8d	-	600 #	110 #	110 #
(B)	H10A**	9-10dx1 1/2"	9-10dx1 1/2"	9-10dx1 1/2"	-	1340 #	590 #	285 #
(C)	H16 / 16-2	2-10dx1 1/2"	10-10dx1 1/2"	9-10dx1 1/2"	-	1340 #	590 #	285 #
(D)	MGT	22-10d	-	-	5/8"ø	3965 #	-	-
(E)	LGT3-SDS2.5 *WHEN G.T. IS ABOVE HEADER, PROVIDE AN ST2215 AT EACH SIDE OF HEADER TO BEARING STUDS. PROVIDE (2) CS18 ACROSS FLOORS AND AN HDU2 AT FOUNDATION FOR EACH SIDE	12-SDS x 2 1/2"	26-16d	26-16d	-	9715 # MIN	-	-
(F)	H7Z	4-8d	2-8d	8-8d	-	985 #	400 #	-

**WHEN CONNECTOR (B) DOES NOT FIT DUE TO TRUSS PRESS PLATE INTERFERENCE, SUBSTITUTE (C) CONNECTOR

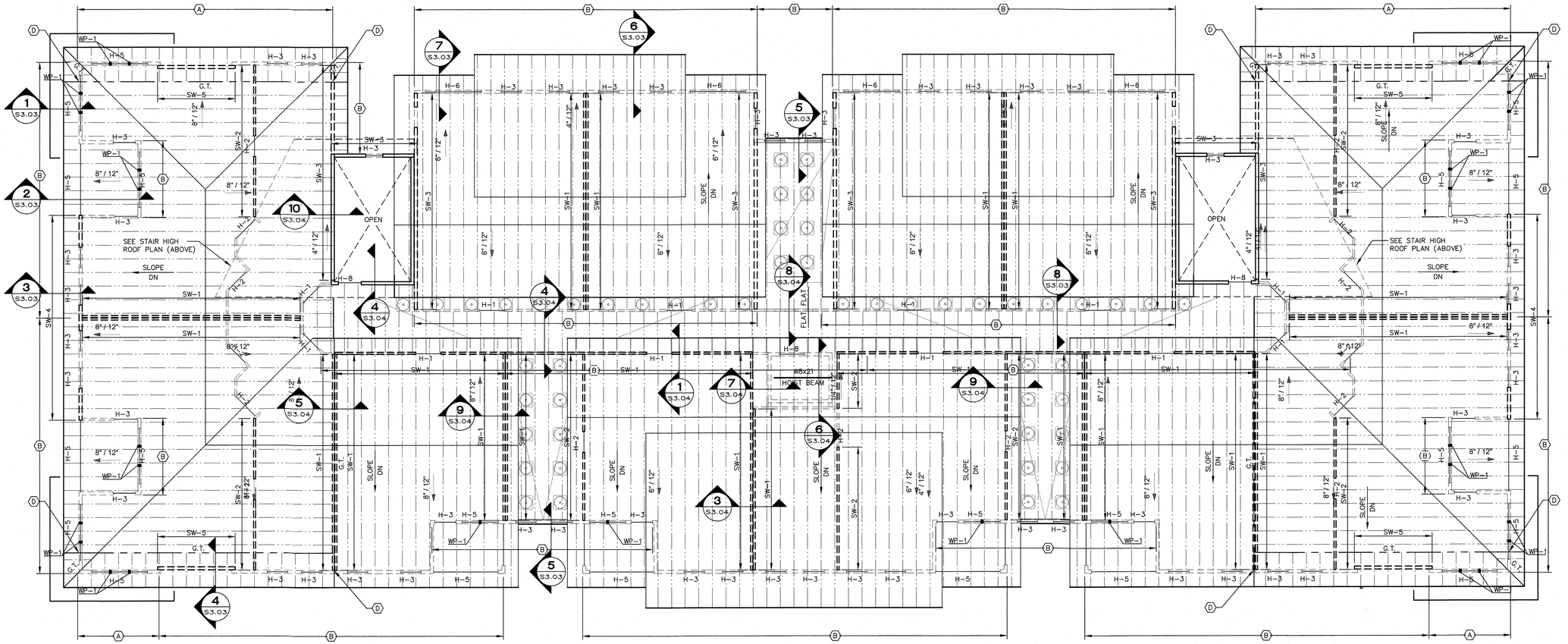

1 BUILDING TYPE 2 - ROOF FRAMING PLAN
1/8" = 1'-0"

LAKE COUNTY BUILDING SERVICES
Any errors or omissions in these plans shall be made to conform with the applicable code requirements per Florida Building Code, in accordance with Section 107. Plans were reviewed for code compliance and shall be kept on job site.

RECEIVED FEB 14 2019

PERMIT REVIEW STAMP
JOHN GUTHERMAN JR LICENSE No. 60880 STATE OF FLORIDA PROFESSIONAL ENGINEER

ISSUE HISTORY

No.	Date	Description
1	02/08/2019	ISSUE FOR PERMIT

REVISION HISTORY

No.	Date	Description

© 2017 These documents and their contents are the property of FUGLEBERG KOCH - AA26002103, and are issued only for the specific project noted on these drawings. Any reproductions, revisions, or modifications of these documents without the expressed written consent of Fugleberg Koch, is prohibited by law.

FUGLEBERG KOCH
2555 Temple Trail, Winter Park, FL 32789 (407) 629-0595
www.fugleberg koch.com AA26002103

CONSULTANT
GUTHERMAN STRUCTURAL INC.
130 CROWN OAK CENTRE DR.
LONGWOOD FL 32750
P: 407.701.0875 LIC. #28863
Gutherman STRUCTURAL
John Gutherman Jr., P.E.
FL. REG. #60880

SUMMER BAY APTS. II
LAKE COUNTY, FL

Drawn:	JRIVERA
Checked:	JGUTHERMAN
Approved:	JGUTHERMAN
Date:	02/08/2019
Project #:	5389

BUILDING TYPE 2 ROOF FRAMING PLAN

S1.10

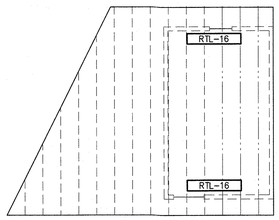

STAIR HIGH ROOF
PARTIAL PLAN
(MIRRORED FOR OPPOSITE SIDE)

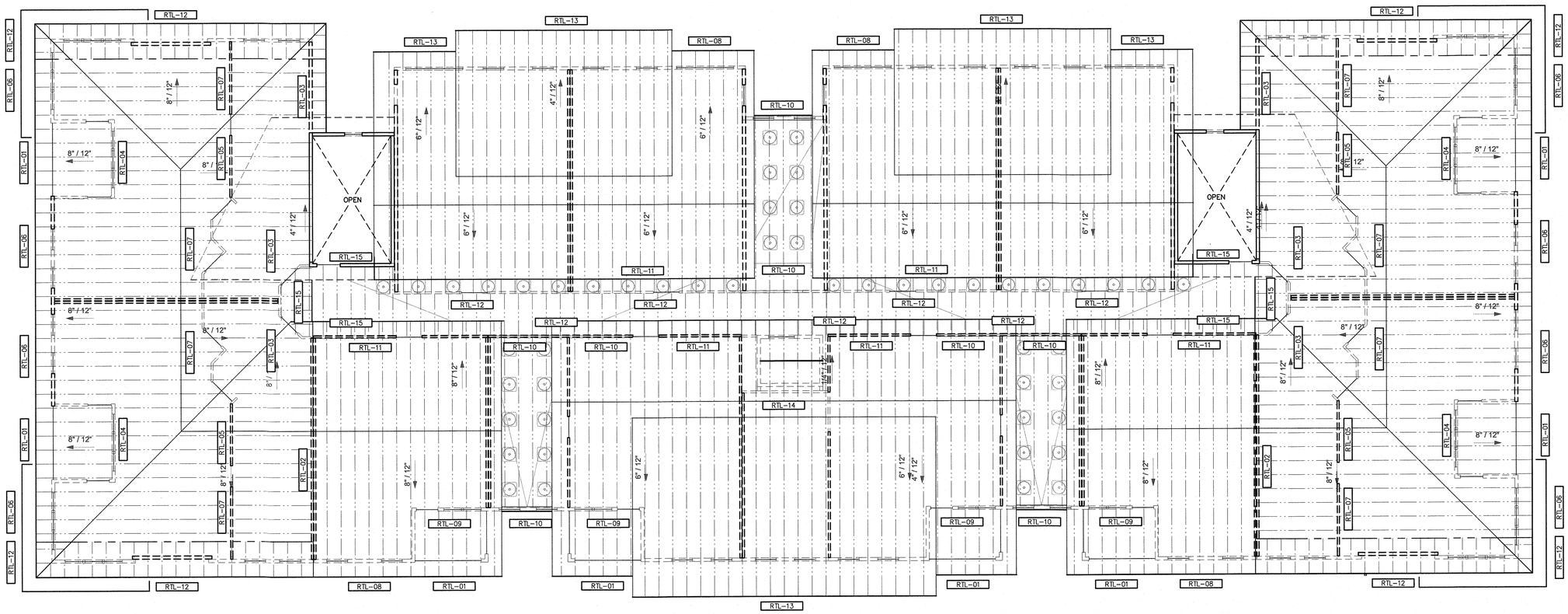

GRAVITY AND UPLIFT SCHEDULE		
MARK	GRAVITY (LBS)	NET UPLIFT (LBS)
RTL-01	601	241
RTL-02	518	207
RTL-03	642	257
RTL-04	1125	450
RTL-05	1283	513
RTL-06	1350	540
RTL-07	1665	666
RTL-08	1620	648
RTL-09	1440	576
RTL-10	1114	446
RTL-11	1440	576
RTL-12	285	114
RTL-13	1530	612
RTL-14	1125	450
RTL-15	450	180
RTL-16	1021	409

ROOF NOTES:

1. RTL-# (GRAVITY) INDICATES ROOF TOTAL GRAVITY SERVICE REACTION (DEAD AND LIVE) PER TRUSS.

   RTL-# (NET UPLIFT) INDICATES ROOF NET UPLIFT REACTION (USING A NET UPLIFT PRESSURE OF 18 PSF) PER TRUSS.

1 BUILDING TYPE 2 - TRUSS LOADING PLAN

1/8" = 1'-0"

LAKE COUNTY BUILDING SERVICES
Any errors or omissions in these plans shall be made to conform with the applicable code requirements per Florida Building Code, in accordance with Section 107. Plans were reviewed for code compliance and shall be kept on job site.

RECEIVED FEB 14 2019

PERMIT REVIEW STAMP
JOHN GUTHERMAN JR
LICENSE
No. 60880
STATE OF
FLORIDA
PROFESSIONAL ENGINEER

ISSUE HISTORY

No.	Date	Description
1	02/08/2019	ISSUE FOR PERMIT

REVISION HISTORY

No.	Date	Description

© 2017 These documents and their contents are the property of FUGLEBERG KOCH - AA26002103 and are issued only for the specific project noted on these drawings. Any reproductions, revisions, or modifications of these documents without the expressed written consent of Fugleberg Koch, is prohibited by law.

FUGLEBERG KOCH
2555 Temple Trail, Winter Park, FL 32789 (407) 629-0595
www.fuglebergkoch.com AA26002103

CONSULTANT
GUTHERMAN STRUCTURAL INC.
130 CROWN OAK CENTRE DR.
LONGWOOD FL 32750
P: 407.701.0875 LIC. #28863
Gutherman STRUCTURAL
John Gutherman Jr., P.E.
FL. REG. #60880

SUMMER BAY APTS. II
LAKE COUNTY, FL

Drawn:	JRIVERA
Checked:	JGUTHERMAN
Approval:	JGUTHERMAN
Date:	02/08/2019
Project #:	5389

BUILDING TYPE 2
TRUSS LOADING PLAN

S1.10a

STRUCTURAL NOTES

CONTRACTOR NOTE:

THE CONTRACTOR IS SOLELY RESPONSIBLE FOR INITIATING, MAINTAINING AND SUPERVISING ALL SAFETY PRECAUTIONS AND PROGRAMS IN CONNECTION WITH THE WORK. GUTHERMAN STRUCTURAL, INC. IS NOT RESPONSIBLE FOR THE MEANS AND METHODS OF CONSTRUCTION OR FOR RELATED SAFETY PRECAUTIONS AND PROGRAMS.

CODES AND STANDARDS

1. WIND LOADS AS PER:
   A. FLORIDA BUILDING CODE 6TH EDITION (2017) WITH AN ULTIMATE DESIGN WIND SPEED OF 139 MPH, EXPOSURE B, NOMINAL DESIGN WIND SPEED OF 107 MPH; +/-0.18 INTERNAL PRESSURE COEFFICIENT, AND BUILDING RISK CATEGORY II.
   B. THIS BUILDING IS DESIGNED AS AN ENCLOSED BUILDING.
2. THE PROJECT WAS DESIGNED IN ACCORDANCE WITH THE:
   A. FLORIDA BUILDING CODE 6TH EDITION (2017).
   B. BUILDING CODE REQUIREMENTS FOR REINFORCED CONCRETE (ACI 318/ 2011 EDITION).
   C. MANUAL OF STANDARD PRACTICE FOR DETAILING REINFORCED CONCRETE STRUCTURES (ACI 315/ LATEST EDITION).
   D. NATIONAL DESIGN SPECIFICATION, WOOD CONSTRUCTION NDS/2012 EDITION.
3. ARCHITECTURAL AND MECHANICAL DRAWINGS:
   A. THE STRUCTURAL DRAWINGS ARE PART OF THE CONTRACT DOCUMENTS AND DO NOT BY THEMSELVES PROVIDE ALL THE INFORMATION REQUIRED TO PROPERLY COMPLETE THE PROJECT STRUCTURE. THE GENERAL CONTRACTOR SHALL CONSULT THE ARCHITECTURAL, MECHANICAL AND ELECTRICAL DRAWINGS AND COORDINATE THE INFORMATION CONTAINED IN THESE DRAWINGS WITH THE STRUCTURAL DRAWINGS TO PROPERLY CONSTRUCT THE PROJECT.
   B. REFER TO ARCHITECTURAL, MECHANICAL OR ELECTRICAL DRAWINGS FOR ADDITIONAL OPENINGS, DEPRESSIONS, FINISHES, INSERTS, BOLTS SETTINGS, DRAINS, REGLETS, ETC.
   C. BEFORE ORDERING ANY MATERIALS OR DOING ANY WORK, THE CONTRACTOR SHALL VERIFY ALL MEASUREMENTS TO PROPERLY SIZE OR FIT THE WORK. NO EXTRA CHARGE OR COMPENSATION WILL BE ALLOWED BY THE OWNER RESULTING FROM THE CONTRACTOR'S FAILURE TO COMPLY WITH THIS REQUIREMENT.
   D. DISCREPANCIES SHALL BE BROUGHT TO THE ATTENTION OF THE ARCHITECT AND ENGINEER BEFORE PROCEEDING WITH ANY WORK.
   E. ALL STRUCTURES HAVE BEEN DESIGNED TO RESIST THE DESIGN LOADS LISTED ONLY AS COMPLETED STRUCTURES. THE GENERAL CONTRACTOR SHALL FULLY BRACE AND OTHERWISE PROTECT WORK IN PROGRESS UNTIL THE STRUCTURES ARE COMPLETED. THE GENERAL CONTRACTOR SHALL ALSO INSURE THAT ITS OPERATIONS AND PROCEDURES PROVIDE NO LOADING GREATER THAN THE DESIGN LOADS LISTED ON ANY MEMBER.
4. SECTIONS AND DETAILS:
   ALL DETAILS, SECTIONS AND NOTES SHOWN ON THE DRAWINGS ARE INTENDED TO BE TYPICAL AND SHALL APPLY TO SIMILAR SITUATIONS ELSEWHERE UNLESS OTHERWISE SHOWN.
5. THRESHOLD INSPECTIONS SHALL BE PERFORMED DURING CONSTRUCTION OF THIS BUILDING AS REQUIRED BY SECTION 110.8 OF FBC.
6. MATERIALS AND ASSEMBLY TEST AS FOLLOWS:
   A. EXTERIOR WINDOWS, SLIDING AND PATIO GLASS DOORS SHALL BE TESTED BY AN APPROVED INDEPENDENT TESTING LABORATORY, AND SHALL BE LABELED WITH AN APPROVED LABEL IDENTIFYING THE MANUFACTURER, PERFORMANCE CHARACTERISTICS AND APPROVED PRODUCT CERTIFICATION AGENCY, TESTING LABORATORY, EVALUATION ENTITY OR FLORIDA STATE WIDE PRODUCT APPROVAL NUMBER TO INDICATE COMPLIANCE WITH THE REQUIREMENTS OF ONE OF THE FOLLOWING SPECIFICATIONS:
   ANSI/AAMA/NWWDA 101/I.S. 2-97 OR TAS 202 (HVHZ SHALL COMPLY WITH TAS 202)
   B. EXTERIOR DOOR ASSEMBLIES SHALL BE TESTED FOR STRUCTURAL INTEGRITY IN ACCORDANCE WITH ASTM E330 AT A LOAD OF 1.5 TIMES THE REQUIRED DESIGN PRESSURE LOAD. THE LOAD SHALL BE SUSTAINED FOR 10 SECONDS WITH NO PERMANENT DEFORMATION OF ANY MAIN FRAME OR PANEL MEMBER IN EXCESS OF 0.4 PERCENT OF ITS SPAN AFTER THE LOAD IS REMOVED. HVHZ SHALL COMPLY WITH TAS 202. AFTER EACH SPECIFIED LOADING, THERE SHALL BE NO GLASS BREAKAGE, PERMANENT DAMAGE TO FASTENERS, HARDWARE PARTS, OR ANY OTHER DAMAGE, WHICH CAUSES THE DOOR TO BE INOPERABLE.
   C. SECTIONAL GARAGE DOORS SHALL BE TESTED FOR DETERMINATION OF STRUCTURAL PERFORMANCE UNDER UNIFORM STATIC AIR PRESSURE DIFFERENCE IN ACCORDANCE WITH ANSI/DASMA 115 OR TAS 201,202 AND 203.
   D. CUSTOM (ONE OF A KIND) EXTERIOR DOOR ASSEMBLIES SHALL BE TESTED BY AN APPROVED TESTING LABORATORY OR BE ENGINEERED IN ACCORDANCE WITH ACCEPTED ENGINEERING PRACTICES.
   E. WINDOW AND DOOR ASSEMBLIES SHALL BE ANCHORED IN ACCORDANCE WITH THE PUBLISHED MANUFACTURER'S RECOMMENDATIONS TO ACHIEVE THE DESIGN PRESSURE SPECIFIED. SUBSTITUTE ANCHORING SYSTEM USED FOR SUBSTRATES NOT SPECIFIED BY THE FENSTRATION MANUFACTURER SHALL PROVIDE EQUAL OR GREATER ANCHORING PERFORMANCE AS DEMONSTRATED BY ACCEPTED ENGINEERING PRACTICE.

SPECIALTY ENGINEERED PRODUCTS

1. THE GENERAL CONTRACTOR IS RESPONSIBLE TO COORDINATE THE PROPER SUBMISSION OF SPECIALTY ENGINEERED SHOP DRAWINGS WHICH SHALL BE SIGNED AND SEALED BY AN ENGINEER REGISTERED IN THE STATE OF FLORIDA. IT IS THE GENERAL CONTRACTOR'S RESPONSIBILITY TO ASSURE THAT THE SPECIALTY ENGINEERED SHOP DRAWINGS ARE SUBMITTED IN A TIMELY MANNER SO AS TO ALLOW REVIEWS AND RESUBMISSIONS AS REQUIRED. ALL SPECIALTY ENGINEERED PRODUCTS SHALL BE DESIGNED FOR THE APPROPRIATE GRAVITY LOADS AND WIND LOADS INCLUDING UPLIFT AND LATERAL LOADS. INTERIOR SPECIALTY PRODUCTS SHALL BE DESIGNED FOR LATERAL LOADS TO ASSURE STABILITY. SPECIALTY ENGINEERED PRODUCTS SHALL BE, BUT ARE NOT LIMITED TO, THE FOLLOWING:
   A. LIGHT GAUGE METAL, INCLUDING BUT NOT LIMITED TO, SOFFITS, CLADDING, CEILINGS, ETC.
   B. MISCELLANEOUS METALS INCLUDING STEEL STAIRS, MECHANICAL EQUIPMENT SUPPORTS, FRAMES THAT SUPPORT MACHINES, PIPES OR OTHER STRUCTURAL METAL USED FOR SUPPORT OF MECHANICAL SYSTEMS.
   C. MISCELLANEOUS HANGERS, CHANDELIERS, CABINETS, METAL FRAMES, LADDERS, RIGGING, HANGING WALLS, RAILINGS, GLAZING FRAMES, CLADDING SUCH AS STONE, PRECAST, ALUMINUM, METAL PANELS, CABLE BARRIER SYSTEMS, ETC. OR ANY OTHER MISCELLANEOUS PRODUCT REQUIRED BY ANY OF THE CONSTRUCTION DOCUMENTS.

D. IN ADDITION TO THE LOADS SHOWN IN THE DESIGN LOAD SCHEDULE, THE SPECIALTY ENGINEER SHALL DESIGN FOR THE WEIGHT OF ALL MECHANICAL, PLUMBING AND ELECTRICAL EQUIPMENT AND FIXTURES, AS WELL AS CHANDELIER FIXTURES, BAR CABINETS, AND ART WORK / MOBILES.

GENERAL CONTRACTOR TO INCLUDE IN THEIR BID THE COST OF THE ABOVE NOTED SPECIALTY ENGINEERING.

FOUNDATION

1. ALL SITE PREPARATION AND EXCAVATION WORK IS TO BE PERFORMED IN STRICT ACCORDANCE WITH THE:
   A. REPORT ON SOILS AND FOUNDATION INVESTIGATION PREPARED BY ECS FLORIDA, LLC REPORT NUMBER 24:6036, DATED APRIL 26, 2017
2. THE BUILDING SITE SHOULD BE EXCAVATED TO THE DEPTH AND EXTENT INDICATED IN THE SOILS REPORT. ALL SUBGRADES SHALL BE APPROVED IN WRITING BY THE SOILS ENGINEER PRIOR TO BACKFILLING.
3. BOTTOM OF FOOTINGS TO BEAR ON CONTROLLED COMPACTED FILL CAPABLE OF SAFELY SUPPORTING 2000 PSF.
4. SOILS SUPPORTING ALL FOOTINGS MUST BE INSPECTED AND APPROVED BY A REGISTERED SOILS ENGINEER BEFORE COMMENCING WORK. APPROVAL IN WRITING MUST INDICATE THE SOIL IS ADEQUATE TO SAFELY SUSTAIN SPECIFIED SOIL BEARING PRESSURE.
5. BOTTOM OF ALL FOOTINGS SHALL BEAR 1'-0" BELOW ADJACENT GRADE TYP. MAKE ADJUSTMENTS AS NEEDED SO BOTTOM OF EXTERIOR FOOTINGS SHALL BE MINIMUM 12-INCHES BELOW EXTERIOR FINISH GRADE.
6. EXCAVATION & BACKFILL:
   A. ALL EXCAVATION SHALL BE KEPT DRY. EXCAVATE TO DEPTHS AND DIMENSIONS INDICATED. TAKE EVERY PRECAUTION TO GUARD AGAINST ANY MOVEMENT OR SETTLEMENT OF ADJACENT STRUCTURES, UTILITIES, PIPING, ETC.
   B. PROVIDE ANY BRACING OR SHORING NECESSARY TO AVOID SETTLEMENT OR DISPLACEMENT OF EXISTING FOUNDATION OR STRUCTURES.

CONCRETE

1. ALL CONCRETE SHALL BE READY MIX AND MEET THE FOLLOWING REQUIREMENTS:
   A. A MINIMUM COMPRESSIVE STRENGTH OF 3000 PSI.
   B. SLUMPS SHALL BE 4-INCHES MINIMUM AND 6-INCHES MAXIMUM.
   C. CONCRETE SHALL HAVE 3 PERCENT AIR ENTRAINMENT.
   D. ALL CONCRETE TO HAVE MAXIMUM WATER/CEMENT RATIO OF 0.55.
   E. JOBSITE WATER SHALL NOT BE ADDED.
2. ALL CONCRETE WORK SHALL COMPLY WITH THE REQUIREMENTS OF THE ACI BUILDING CODE (ACI 318/ 2011 EDITION), THE ACI DETAILING MANUAL (ACI 315/ 1994 EDITION), AND THE SPECIFICATIONS FOR STRUCTURAL CONCRETE FOR BUILDINGS (ACI 301/ LATEST EDITION).
3. SUBMIT ALL REINFORCING STEEL SHOP DRAWINGS FOR APPROVAL PRIOR TO ANY FABRICATION.
4. CONCRETE COVER FOR REINFORCING STEEL SHALL BE AS REQUIRED BY ACI SPECIFICATIONS.
5. WELDED WIRE FABRIC SHALL COMPLY WITH ASTM A 1064, UNLESS OTHERWISE SPECIFIED. PLACE FABRIC 2" CLEAR FROM TOP OF THE SLAB IN SLAB ON GRADE AND SUPPORT ON SLAB BOLSTERS SPACED AT 3'-0" O.C.
6. LAP ALL BARS WITH CLASS B TENSION LAP SPLICE UNLESS OTHERWISE NOTED ON DRAWINGS. LAP ALL WWF A MINIMUM OF 12 INCHES (UNLESS OTHERWISE NOTED).
7. REINFORCING BARS:
   A. ALL REINFORCING STEEL SHALL BE MANUFACTURED FROM HIGH STRENGTH BILLET STEEL CONFORMING TO ASTM DESIGNATION A 615 GRADE 60.
   B. AT CORNERS OF CONCRETE WALLS, BEAMS AND CONTINUOUS WALL FOOTINGS, PROVIDE (1-#5 OR MATCHING) HORIZONTAL BARS X 5'-0" BENT BAR FOR EACH HORIZONTAL BAR SCHEDULED AT EACH FACE.
   C. WHERE COLUMNS ARE AN INTEGRAL PART OF CONCRETE WALLS, WALL REINFORCEMENT SHALL BE CONTINUOUS THRU THE COLUMNS.
   D. ALL HOOKS SHOWN IN REINFORCEMENT SHALL BE ACI RECOMMENDED HOOKS UNLESS OTHERWISE NOTED.
8. FOR GRADE BEAMS LAP ALL TOP STEEL AT MID-SPAN AND LAP BOTTOM STEEL OVER SUPPORT.
9. CONSTRUCTION JOINTS IN STRUCTURAL SLABS AND BEAMS SHALL BE AT MID-SPAN AND KEY JOINTED WITH REINFORCING CONTINUOUS ACROSS JOINT AND ADDITIONAL SHEAR FRICTION REINFORCING. CONSTRUCTION JOINT LOCATIONS SHALL BE SUBMITTED FOR REVIEW AND APPROVAL PRIOR TO CONSTRUCTION. CONSTRUCTION JOINTS IN POST-TENSION SLABS SHALL BE LOCATED AND DESIGNED BY SPECIALTY ENGINEER.

POST-TENSION CONCRETE

1. ENGAGE THE SERVICES OF A PROFESSIONAL ENGINEER REGISTERED IN THE STATE OF FLORIDA TO PREPARE AND SUBMIT COMPLETE SHOP DRAWINGS AND COMPLETE STRUCTURAL DESIGN COMPUTATIONS, INCLUDING STRESS LOSS CALCULATIONS AND DESIGN FOR ALL VERTICAL LOAD SUPPORT INCLUDING GRAVITY, AND UPLIFT FROM SHEAR WALLS. DRAWINGS SHALL BE SIGNED AND BEAR THE DELEGATED ENGINEER'S PROFESSIONAL SEAL. POST-TENSION SHOP DRAWINGS SHALL INCLUDE REBAR LAYOUT PLAN AND ANY ADDITIONAL REINFORCING NECESSARY FROM POST-TENSION SPECIALTY ENGINEER RESULTING FROM SPECIALTY ENGINEERS CALCULATIONS.
2. PRE-STRESSING SHALL CONFORM TO THE STANDARDS OF THE ACI BUILDING CODE 318/2011 EDITION.
3. POST TENSIONING CABLES SHALL HAVE A CORROSION PROTECTION SYSTEM, WHICH IS IN ACCORDANCE WITH THE RECOMMENDATION OF PRESTRESSED CONCRETE INSTITUTE FOR CABLES USED IN A CORROSIVE ENVIRONMENT.
4. TENDONS FOR PRE-STRESSING SHALL CONFORM TO THE ASTM SPECIFICATION A416 OR A421 AND SHALL BE 270K GRADE WITH A MINIMUM ULTIMATE STRENGTH OF 270,000 PSI AND A YIELD STRENGTH OF 240,000 PSI.
5. ALL TENDONS SHALL BE UNBONDED.
6. CONSTRUCTION JOINTS IN POST-TENSIONED MEMBERS SHALL BE APPROVED BY THE STRUCTURAL ENGINEER, PRIOR TO CONSTRUCTION.

STEEL STAIRS

1. ENGINEERED CONCRETE FILLED STEEL STAIR SYSTEM AND ALL CONNECTIONS OF THE SAME TO THIS STRUCTURE SHALL BE DESIGNED BY AN ENGINEER REGISTERED IN THE STATE OF FLORIDA. SUBMIT SHOP DRAWINGS BEARING THE EMBOSSED SEAL AND THE SIGNATURE OF THE ENGINEER FOR REVIEW PRIOR TO FABRICATION. THE CONFIGURATION OF THE STEEL STAIR SYSTEM SHALL BE SHOWN ON THE ARCHITECTURAL DRAWINGS. STEEL STAIR SYSTEM AND ALL CONNECTIONS SHALL BE DESIGNED FOR ALL APPLICABLE LOADS AS INDICATED ON THE PLANS AND IN ALL APPLICABLE BUILDING CODES. THE LOADS SHALL BE CLEARLY INDICATED ON ALL SHOP DRAWINGS. SHOP DRAWINGS SHALL SHOW AND SPECIFY ALL CONNECTIONS UTILIZED WITHIN THE STEEL STAIR SYSTEM AS WELL AS CONNECTIONS TO AND LOADS IMPOSED UPON THE STRUCTURAL SYSTEM SHOWN OF THESE PLANS.

WOOD

1. ALL STRUCTURAL WOOD MEMBERS ARE DESIGNED AS "DRY-USE". MOISTURE CONTENT MUST BE 19% OR LESS. STORE WOOD FRAMING ABOVE GROUND AND UNDER TARPS WITH PROPER AIR CIRCULATION.
2. ALL LUMBER SHALL BE SOUTHERN PINE SPECIES #2 GRADE OR APPROVED EQUAL. ALLOWABLE DESIGN STRESSES SHALL FOLLOW NATIONAL DESIGN SPECIFICATION (NDS) (LATEST EDITION).
3. HEADERS AT NON BEARING CONDITIONS SHALL BE AS FOLLOWS:

OPENING SIZE	HEADER
UP TO 4' -0"	(2) 2" X 6"
4'- 0" TO 6'- 0"	(2) 2" X 8"
6'- 0" TO 9'- 0"	(2) 2" X 10"

4. PROVIDE SP ACQ PRESSURE TREATED LUMBER IN ACCORDANCE WITH AWPA STANDARDS TO A MINIMUM 0.40 PCF RETENTION WHERE LUMBER IS IN CONTACT WITH CONCRETE/MASONRY OR OUTSIDE OF BUILDING. ALL METAL CONNECTORS IN CONTACT WITH PRESSURE TREADED LUMBER SHALL BE GALVANIZED WITH A RATING OF G-185 AND CONFORM TO ASTM A653. ALL NAILS AND SCREWS USED WITH PRESSURE TREATED LUMBER ARE TO BE HOT-DIPPED GALVANIZED AND TO CONFORM TO ASTM A153 CLASS D. ELECTROGALVANIZED FASTENERS SHALL HAVE A CLASS RATING PER ASTM B695 NO LESS THAN 55. ALUMINUM NOT TO BE USED IN DIRECT CONTACT WITH ACQ TREATED LUMBER.

WOOD (CONT.)

5. PLYWOOD SHEATHING:
   A. FLOOR: USE 3/4" T&G APA 24oc STURD-I-FLOOR, EXP. 1, PLYWOOD SUB-FLOOR SHEATHING.
   B. WALL: Use 7/16" ZIP WALL SHEATHING, 32/16 RATED, EXP. 1,
   C. ROOF: Use (15/32") 32/16 RATED, EXP. 1, PLYWOOD OR OSB SHEATHING.
   D. SEE FRAMING PLANS FOR NAILING AND/OR BLOCKING REQUIREMENTS. USE 8'- 0" LONG X 4'-0" WIDE SHEETS WITH LENGTH ACROSS FRAMING. STAGGER PANEL END JOINTS 4'-0" TYP., ALLOW 1/8" SPACE ALONG PANEL EDGES AND END JOINTS.
   E. FLOOR SHEATHING TO BE SCREWED WITH #10 WOOD SCREWS AT 6" O.C. AND GLUED FOR PARTIAL COMPOSITE ACTION. SELECT ADHESIVE WITH APA AFG-01 SPECIFICATION AND FOLLOW APA RECOMMENDATIONS.
   F. SEE FRAMING PLANS FOR DIAPHRAGM NAILING TYPE, SIZE, SPACING AND LOCATIONS.
6. WOOD CONNECTIONS – ALL NAILS USED FOR STRUCTURAL FRAMING MEMBERS SHALL BE COMMON WIRE, U.N.O. ALL NAILS, TRUSS HANGERS, TRUSS ANCHORS AND STRAPS SHALL BE GALVANIZED FOR CORROSIVE RESISTANCE. ALL METAL STRAPS MUST BE INSTALLED WITH EQUAL LENGTHS ABOUT THE JOINT LINE. USE SIMPSON STRONG-TIE CONNECTOR PRODUCTS OR APPROVED EQUAL. TOE NAILING WILL NOT BE PERMITTED.

TIMBER

1. ALL MICROLLAM LVL BEAMS TO
   A. BE ENGINEERED AND MANUFACTURED BY TRUS JOIST WEYERHAEUSER (TJW) OR APPROVED EQUAL. TEMPORARY BRACING TO BE INSTALLED PER MANUFACTURER'S RECOMMENDATIONS. PROVIDE CONTINUOUS SUPPORT OF THE COMPRESSION EDGE AND PROVIDE LATERAL SUPPORT AT ALL BEARINGS. THE MINIMUM ALLOWABLE STRESSES FOR MICROLLAM BEAMS ARE AS FOLLOWS:
   Fb = 2,600 PSI Fv = 285 PSI E = 1,900,000 PSI
   B. CONNECT:(2) PLY LVL W/3 ROWS OF 16d COMMON NAILS AT 12" O/C;
   C. CONNECT:(3) PLY LVL W/3 ROWS OF 16d COMMON NAILS AT 12" O/C, EACH FACE;
2. ALL PARALLAM PSL BEAMS TO
   A. BE ENGINEERED AND MANUFACTURED BY TRUS JOIST WEYERHAEUSER (TJW) OR APPROVED EQUAL. TEMPORARY BRACING TO BE INSTALLED PER MANUFACTURER'S RECOMMENDATIONS. PROVIDE CONTINUOUS SUPPORT OF THE COMPRESSION EDGE AND PROVIDE LATERAL SUPPORT AT ALL BEARINGS. THE MINIMUM ALLOWABLE STRESSES FOR PARALLAM BEAMS ARE AS FOLLOWS:
   Fb = 2,900 PSI Fv = 290 PSI E = 2,000,000 PSI
   B. ALL EXPOSED EXTERIOR PARALLAM BEAMS ARE TO BE WOLMANIZED PRESSURE TREATED FOR A SERVICE LEVEL 2 EXPOSURE. ALL OTHER PARALLAM BEAMS ARE TO BE WOLMANIZED PRESSURE TREATED FOR A SERVICE LEVEL 1 EXPOSURE.
3. ALL PARALLAM PSL COLUMNS TO
   A. BE ENGINEERED AND MANUFACTURED BY TRUS JOIST WEYERHAEUSER (TJW) OR APPROVED EQUAL. TEMPORARY BRACING TO BE INSTALLED PER MANUFACTURER'S RECOMMENDATIONS. THE MINIMUM ALLOWABLE PROPERTIES FOR PARALLAM COLUMNS THE MINIMUM ALLOWABLE STRESSES ARE AS FOLLOWS:
   Fb = 2,400 PSI Fcll = 2500 PSI E = 1,800,000 PSI
   B. ALL EXPOSED EXTERIOR PARALLAM COLUMNS ARE TO BE WOLMANIZED PRESSURE TREATED FOR A SERVICE LEVEL 2 EXPOSURE. ALL OTHER PARALLAM COLUMNS ARE TO BE WOLMANIZED PRESSURE TREATED FOR A SERVICE LEVEL 1 EXPOSURE.
4. ALL STRUCTURAL TIMBER TO
   A. SOUTHERN PINE SPECIES, #2 GRADE (MINIMUM) OR APPROVED EQUAL.
   B. BE DESIGNED PER THE AMERICAN INSTITUTE OF TIMBER CONSTRUCTION'S (AITC)"TIMBER CONSTRUCTION MANUAL" AND AMERICAN FOREST & PAPER ASSOCIATION'S (AFPA) NATIONAL DESIGN SPECIFICATION".
   C. PROVIDE SP ACQ PRESSURE TREATED LUMBER IN ACCORDANCE WITH AWPA STANDARDS TO A MINIMUM 0.40 PCF RETENTION WHERE LUMBER IS IN CONTACT WITH CONCRETE/MASONRY OR OUTSIDE OF BUILDING. ALL METAL CONNECTORS IN CONTACT WITH PRESSURE TREADED LUMBER SHALL BE GALVANIZED WITH A RATING OF G-185 AND CONFORM TO ASTM A653. ALL NAILS AND SCREWS USED WITH PRESSURE TREATED LUMBER ARE TO BE HOT-DIPPED GALVANIZED AND TO CONFORM TO ASTM A153 CLASS D. ELECTROGALVANIZED FASTENERS SHALL HAVE A CLASS RATING PER ASTM B695 NO LESS THAN 55. ALUMINUM NOT TO BE USED IN DIRECT CONTACT WITH ACQ TREATED LUMBER.
5. ALL GLUED LAMINATED BEAMS SHALL BE VISUALLY GRADED SOUTHERN PINE OR APPROVED EQUAL AND:
   A. BE DESIGNED AND MANUFACTURED WITH ANSI/AITC A.190.1-2007, THE AMERICAN INSTITUTE OF TIMBER CONSTRUCTION'S (AITC)"TIMBER CONSTRUCTION MANUAL", AMERICAN FOREST & PAPER ASSOCIATION'S (AFPA) NATIONAL DESIGN SPECIFICATION", AND AMERICAN PLYWOOD ASSOCAITION-ENGINEERED WOOD SYSTEMS STANDARDS.
   B. GLUE LAMINATED BEAM ADHESIVES TO CONFORM WITH ASTM D2559-92.
   C. THE MINIMUM ALLOWABLE PROPERTIES FOR GLUED LAMINATED BEAMS ARE AS FOLLOWS:
   Fb = 2,400 PSI Fv = 240 PSI E = 1.7 X 106 PSI
   D. BE PRESSURE TREATED WITH A WATER BORNE PRESERVATIVE FOR EXTERIOR USE OR WHEN IN CONTACT WITH CONCRETE OR MASONRY PER AITC 109-90 AND AMERICAN WOOD PRESERVERS C-28 STANDARDS.
6. ALL TIMBER AND GLUE LAMINATED BEAM CONSTRUCTION SHALL COMPLY WITH SPECIFICATIONS AND CODES AS SPECIFIED BELOW:
   A. NATIONAL LUMBER MANUFACTURERS ASSOCIATION: NATIONAL DESIGN SPECIFICATION FOR STRESS GRADE LUMBER AND ITS FASTENINGS.
7. ALL TIMBER AND GLUE LAMINATED CONNECTIONS ARE TO BE MADE USING PREFABRICATED STEEL CONNECTORS. TOE NAILING WILL NOT BE PERMITTED. SUBMIT MANUFACTURER'S DATA FOR APPROVAL. FASTENERS TO BE AS MANUFACTURED BY HECKMANN, SIMPSON STRONG-TIE OR APPROVED EQUAL.
8. GLUE LAMINATED CONSTRUCTION: DESIGN, FABRICATION AND CONSTRUCTION OF STRUCTURAL GLUE LAMINATED. TIMBER SHALL CONFORM WITH THE FOLLOWING STANDARDS:
   A. PROVIDE FACTORY GLUED TIMBER UNITS, PRODUCED BY AN AITC OR APA-EWS LICENSED FIRM QUALIFIED TO APPLY THE AITC OR APA-EWS QUALITY INSPECTED TRADEMARK.
   B. SUBMIT SHOP DRAWINGS SHOWING FULL DIMENSIONS OF EACH MEMBER AND LAYOUT OF ENTIRE STRUCTURAL SYSTEM. SHOW DETAILS OF CONNECTION, CONNECTORS AND ACCESSORIES. INDICATE SPECIES AND STRESS GRADE OF LUMBER AND TYPE OF ADHESIVES.
   C. KEEP GLUE LAMINATED BEAMS DRY DURING DELIVERY, STORAGE, HANDLING, ERECTION, AND UNTIL THE BUILDING ENCLOSURE IS COMPLETED.
   D. APPEARANCE SHALL BE INDUSTRIAL GRADE. EXCEPT EXPOSED MEMBERS AS NOTED ON DRAWINGS, WHICH SHALL HAVE ARCHITECTURAL GRADE.
   E. CONTRACTOR SHALL PROVIDE CONNECTION HARDWARE REQUIRED (INDICATED ON PLANS OR NOT) TO PROPERLY JOIN MEMBERS TO EACH OTHER AND TO THEIR SUPPORTS. CONNECTIONS SHALL BE CAPABLE OF TRANSFERRING THE APPLIED LOAD TO THE SUPPORTING MEMBERS. STEEL PLATES, ANGLES, OR OTHER SHAPES SHALL CONFORM TO ASTM A 36, AND BOLTS SHALL CONFORM TO ASTM A-325. LAG SCREWS, SHEAR PLATES, SPLIT RINGS, ETC. CONNECTORS SHALL CONFORM TO THE "AMERICAN FOREST AND PAPER ASSOCIATION".
   F. CONNECTING HARDWARE SHALL BE HOT-DIP GALVANIZED AFTER FABRICATION CONFORMING WITH ASTM A 123.

WOOD TRUSSES

1. WOOD ROOF TRUSSES AND WOOD FLOOR TRUSSES ARE TO BE DESIGNED FOR THE WOOD FABRICATOR BY A PROFESSIONAL SPECIALTY ENGINEER REGISTERED IN THE STATE OF FLORIDA. SEALED CALCULATIONS AND LAYOUT DRAWINGS ARE TO BE SUBMITTED FOR APPROVAL TRUSS FABRICATOR TO PROVIDE ALL TRUSS-TO-TRUSS HANGERS AS REQUIRED TO RESIST GRAVITY AND UPLIFT REACTION. (UPLIFT LOADING SHALL USE COMPONENTS & CLADDING WIND FORCES.)
2. WOOD TRUSSES SHALL BE BRACED AND ERECTED IN ACCORDANCE WITH THE 2008 EDITION OF THE BUILDING COMPONENT SAFETY INFORMATION GUIDE TO GOOD PRACTICE FOR HANDLING, INSTALLING, RESTRAINING & BRACING OF METAL PLATE CONNECTED WOOD TRUSSES, JOINTLY PRODUCED BY WTCA AND TRUSS PLATE INSTITUTE. BRACING IN THE PLANE OF THE WEB MEMBERS:
   A. THE TRUSS FABRICATOR SHALL PROVIDE AND LOCATE CONTINUOUS LATERAL BRACING FOR EACH TRUSS WEB MEMBER AS REQUIRED.
   B. LATERAL BRACING SHALL BE RESTRAINED BY DIAGONAL BRACING (MIN. 2" THICK NOMINAL LUMBER). THIS BRACING IS TO BE CONTINUOUS.
   C. A MINIMUM OF TWO ROWS OF DIAGONAL BRACING IS REQUIRED, ONE AT EACH VERTICAL WEB MEMBER CLOSEST TO BEARING LOCATIONS.
3. THE BOTTOM CHORDS SHALL BE BRACED BY CONTINUOUS LATERAL BRACING SPACED AT 8'-0" ON CENTER WITH A CEILING ATTACHED TO BOTTOM OF TRUSSES. IF NO CEILING IS ATTACHED TO BOTTOM OF TRUSSES, BRACING SHALL BE MINIMUM 2X4 @ 36" ON CENTER NAILED TO THE TOP OF THE BOTTOM CHORD. DIAGONALS PLACED AT 45 DEGREES TO THE LATERAL BRACES SHALL BE LOCATED AT EACH END. IF BUILDING EXCEEDS 60 FEET IN LENGTH, DIAGONAL BRACING SHOULD BE REPEATED AT 20 FOOT INTERVALS.
4. TOP CHORD BRACING:
   A. IF PLYWOOD DECKING IS APPLIED DIRECTLY TO TOP CHORD, PROPERLY LAPPED AND NAILED TO DEVELOP DIAPHRAGM ACTION, BRACING IS NOT REQUIRED.
   B. IF PURLINS ARE USED, DIAGONAL TOP CHORD BRACING IS REQUIRED AT EACH END. IF BUILDING EXCEEDS 60 FEET IN LENGTH, DIAGONAL BRACING SHOULD BE REPEATED AT 20-FOOT INTERVALS.
5. DO NOT CUT, DRILL OR NOTCH ROOF OR FLOOR TRUSSES WITHOUT WRITTEN APPROVAL FROM TRUSS ENGINEER. COORDINATE MECHANICAL, ELECTRICAL, PLUMBING, ETC. SIZES AND LOCATIONS WITH TRUSS LAYOUT PRIOR TO ERECTION.
6. TRUSSES SHALL BE MANUFACTURED & DESIGNED IN ACCORDANCE WITH NATIONAL DESIGN SPECIFICATION(S) FOR WOOD CONSTRUCTION, AF & PA, AND NATIONAL DESIGN STANDARD FOR METAL PLATE CONNECTED WOOD TRUSS CONSTRUCTION, ANSI/TPI 1-2007, AND THE LOCAL CODE JURISDICTIONS.
7. DO NOT OVERLOAD FLOOR OR ROOF TRUSSES WITH BUILDING MATERIALS.
8. CONNECTOR PLATES SHALL BE MANUFACTURED BY A WTCA MEMBER PLATE SUPPLIER AND SHALL MEET OR EXCEED ASTM A653/A653M REQUIREMENTS FOR STRUCTURAL STEEL.

SHOP DRAWINGS

1. THE SHOP DRAWINGS SHALL BE SUBMITTED IN COMPLETE PACKAGES FOR THE FOLLOWING:
   A. CONCRETE MIX DESIGNS
   B. POST-TENSIONED CONCRETE
   C. PRE-ENGINEERED STEEL STAIRS
   D. PRE-ENGINEERED WOOD TRUSSES
   E. PRE-ENGINEERED WOOD SYSTEMS (I.E. TJI, PARALLAM, MIRCROLAM, ETC.)
   F. HEAVY TIMBER WOOD FRAMING
   G. CONTINUOUS ROD TIE DOWN SYSTEM
2. PRE-ENGINEERED ITEMS SHALL BE SUBMITTED SIGNED AND SEALED BY A SPECIALTY ENGINEER REGISTERED IN THE STATE OF FLORIDA.

GC SHALL ENGAGE THE SERVICES OF A CONTINUOUS ROD TIE DOWN SYSTEM COMPANY TO PROVIDE SIGNED AND SEALED DESIGN DOCUMENT FOR ALL SHEAR WALL ANCHORS AND UNIFORM SPACED ROOF TIE DOWN UPLIFT RODS.

LAKE COUNTY BUILDING SERVICES
Any errors or omissions in these plans shall be made to conform with the applicable code requirements per Florida Building Code, in accordance with Section 107. Plans were reviewed for code compliance and shall be kept on job site.

RECEIVED FEB 14 2019

PERMIT REVIEW STAMP
JOHN G. GUTHERMAN JR. LICENSE No. 60880 STATE OF FLORIDA PROFESSIONAL ENGINEER

ISSUE HISTORY

No.	Date	Description
1	02/08/2019	ISSUE FOR PERMIT

REVISION HISTORY

No.	Date	Description

© 2017 These documents and their contents are the property of FUGLEBERG KOCH - AA26002103, and are issued only for the specific project listed on these drawings. Any reproductions, modifications or distribution of these documents without the expressed written consent of Fugleberg Koch, is prohibited by law.

FUGLEBERG KOCH
2555 Temple Trail, Winter Park, FL 32789 (407) 629-0595
www.fuglebergkoch.com AA26002103

CONSULTANT
GUTHERMAN STRUCTURAL INC.
130 CROWN OAK CENTRE DR.
LONGWOOD FL 32750
P: 407.701.0875 LIC. #28863
Gutherman STRUCTURAL
John Gutherman Jr., P.E.
FL. REG. #60880

SUMMER BAY APTS. II
LAKE COUNTY, FL

Drawn:	JRIVERA
Checked:	JGUTHERMAN
Approval:	JGUTHERMAN
Date:	02/08/2019
Project #:	5389

STRUCTURAL NOTES & SCHEDULES

S2.01

SHEARWALL SCHEDULE

	TENANT WALL, UNITS SIDE				TENANT WALL, AIR-GAP SIDE NO SHEATHING, OR CORRIDOR SIDE RESILIENT CHANNELS					
	LOCATION	SHEATHING MATERIAL	EDGE NAILING	FIELD NAILING	SHEATHING MATERIAL	EDGE NAILING	FIELD NAILING	UPLIFT AT END OF WALL	BOTTOM SILL PLATE ATTACHMENT	# OF STUDS AT WALL ENDS
SW-1	GROUND TO 2ND	7/16" CDX OR OSB	8d AT 6" O.C. 1-3/8" EMBED	8d AT 12" O.C. 1-3/8" EMBED	–	–	–	6,200 LB	5/8"ø ANCHOR BOLTS 5" EMBED AT 32" O.C.	(4) 2X4
	2ND TO 3RD	5/8" TYPE "X" GYPSUM SHEATHING BOARD	6d COOLER OR WALLBOARD NAIL @ 4" O.C. 1-1/4" EMBED	6d COOLER OR WALLBOARD NAIL @ 7" O.C. 1-1/4" EMBED	–	–	–	4,000 LB	(2) 0.162"ø NAILS AT 8" O.C.	(4) 2X4
	3RD TO 4TH	5/8" TYPE "X" GYPSUM SHEATHING BOARD	6d COOLER OR WALLBOARD NAIL @ 4" O.C. 1-1/4" EMBED	6d COOLER OR WALLBOARD NAIL @ 7" O.C. 1-1/4" EMBED	–	–	–	2,000 LB	(2) 0.162"ø NAILS AT 12" O.C.	(4) 2X4
	4TH TO ROOF	5/8" TYPE "X" GYPSUM SHEATHING BOARD	6d COOLER OR WALLBOARD NAIL @ 4" O.C. 1-1/4" EMBED	6d COOLER OR WALLBOARD NAIL @ 7" O.C. 1-1/4" EMBED	–	–	–	1,000 LB	(2) 0.162"ø NAILS AT 12" O.C.	(4) 2X4
	LEFT SIDE OF UNIT INTERIOR WALL SHEATHING				RIGHT SIDE OF UNIT INTERIOR WALL SHEATHING					
	LOCATION	SHEATHING MATERIAL	EDGE NAILING	FIELD NAILING	SHEATHING MATERIAL	EDGE NAILING	FIELD NAILING	UPLIFT AT END OF WALL	BOTTOM SILL PLATE ATTACHMENT	# OF STUDS AT WALL ENDS
SW-2	GROUND TO 2ND	(2) LAYERS 5/8" TYPE "X" GYPSUM SHEATHING BOARD	BASE PLY-6d AT 9" O.C. 1-1/2" EMBED TO BASE WOOD, FACE PLY-8d AT 7" O.C. 1-1/2" EMBED TO BASE WOOD		(2) LAYERS 5/8" TYPE "X" GYPSUM SHEATHING BOARD	BASE PLY-6d AT 9" O.C. 1-1/2" EMBED TO BASE WOOD, FACE PLY-8d AT 7" O.C. 1-1/2" EMBED TO BASE WOOD		12,000 LB	5/8"ø ANCHOR BOLTS 5" EMBED AT 32" O.C.	(4) 2X4
	2ND TO 3RD	5/8" TYPE "X" GYPSUM SHEATHING BOARD	6d COOLER OR WALLBOARD NAIL @ 4" O.C. 1-1/4" EMBED	6d COOLER OR WALLBOARD NAIL @ 7" O.C. 1-1/4" EMBED	5/8" TYPE "X" GYPSUM SHEATHING BOARD	6d COOLER OR WALLBOARD NAIL @ 4" O.C. 1-1/4" EMBED	6d COOLER OR WALLBOARD NAIL @ 7" O.C. 1-1/4" EMBED	7,200 LB	(2) 0.162"ø NAILS AT 8" O.C.	(4) 2X4
	3RD TO 4TH	5/8" TYPE "X" GYPSUM SHEATHING BOARD	6d COOLER OR WALLBOARD NAIL @ 4" O.C. 1-1/4" EMBED	6d COOLER OR WALLBOARD NAIL @ 7" O.C. 1-1/4" EMBED	5/8" TYPE "X" GYPSUM SHEATHING BOARD	6d COOLER OR WALLBOARD NAIL @ 4" O.C. 1-1/4" EMBED	6d COOLER OR WALLBOARD NAIL @ 7" O.C. 1-1/4" EMBED	4,000 LB	(2) 0.162"ø NAILS AT 12" O.C.	(4) 2X4
	4TH TO ROOF	5/8" TYPE "X" GYPSUM SHEATHING BOARD	6d COOLER OR WALLBOARD NAIL @ 4" O.C. 1-1/4" EMBED	6d COOLER OR WALLBOARD NAIL @ 7" O.C. 1-1/4" EMBED	5/8" TYPE "X" GYPSUM SHEATHING BOARD	6d COOLER OR WALLBOARD NAIL @ 4" O.C. 1-1/4" EMBED	6d COOLER OR WALLBOARD NAIL @ 7" O.C. 1-1/4" EMBED	1,200 LB	(2) 0.162"ø NAILS AT 12" O.C.	(4) 2X4
	UNIT SIDE WALL SHEATHING									
	LOCATION	SHEATHING MATERIAL	EDGE NAILING	FIELD NAILING	SHEATHING MATERIAL	EDGE NAILING	FIELD NAILING	UPLIFT AT END OF WALL	BOTTOM SILL PLATE ATTACHMENT	# OF STUDS AT WALL ENDS
SW-3	GROUND TO 2ND	7/16" CDX OR OSB	8d AT 6" O.C. 1-3/8" EMBED	8d AT 12" O.C. 1-3/8" EMBED	–	–	–	7,200 LB	5/8"ø ANCHOR BOLTS 5" EMBED AT 32" O.C.	(3)2X6
	2ND TO 3RD	7/16" CDX OR OSB	8d AT 6" O.C. 1-3/8" EMBED	8d AT 12" O.C. 1-3/8" EMBED	–	–	–	4,300 LB	(2) 0.162"ø NAILS AT 6" O.C.	(2)2X6
	3RD TO 4TH	5/8" TYPE "X" GYPSUM SHEATHING BOARD	6d COOLER OR WALLBOARD NAIL @ 4" O.C. 1-1/4" EMBED	6d COOLER OR WALLBOARD NAIL @ 7" O.C. 1-1/4" EMBED	–	–	–	2,200 LB	(2) 0.162"ø NAILS AT 8" O.C.	(2)2X6
	4TH TO ROOF	5/8" TYPE "X" GYPSUM SHEATHING BOARD	6d COOLER OR WALLBOARD NAIL @ 4" O.C. 1-1/4" EMBED	6d COOLER OR WALLBOARD NAIL @ 7" O.C. 1-1/4" EMBED	–	–	–	1,000 LB	(2) 0.162"ø NAILS AT 12" O.C.	(2)2X6
	EXTERIOR WALL SHEATHING				INTERIOR WALL SHEATHING					
	LOCATION	SHEATHING MATERIAL	EDGE NAILING	FIELD NAILING	SHEATHING MATERIAL	EDGE NAILING	FIELD NAILING	UPLIFT AT EACH OPENING	BOTTOM SILL PLATE ATTACHMENT	# OF STUDS AT WALL ENDS
SW-4	GROUND TO 2ND	7/16" ZIP WALL	8d AT 6" O.C. 1-3/8" EMBED	8d AT 12" O.C. 1-3/8" EMBED	5/8" TYPE "X" GYPSUM SHEATHING BOARD	6d COOLER OR WALLBOARD NAIL @ 4" O.C. 1-1/4" EMBED	6d COOLER OR WALLBOARD NAIL @ 7" O.C. 1-1/4" EMBED	16,800 LB	5/8"ø ANCHOR BOLTS 5" EMBED AT 24" O.C.	(3)2X6
	2ND TO 3RD	7/16" ZIP WALL	8d AT 6" O.C. 1-3/8" EMBED	8d AT 12" O.C. 1-3/8" EMBED	5/8" TYPE "X" GYPSUM SHEATHING BOARD	6d COOLER OR WALLBOARD NAIL @ 4" O.C. 1-1/4" EMBED	6d COOLER OR WALLBOARD NAIL @ 7" O.C. 1-1/4" EMBED	12,000 LB	(2) 0.162"ø NAILS AT 6" O.C.	(3)2X6
	3RD TO 4TH	7/16" ZIP WALL	8d AT 6" O.C. 1-3/8" EMBED	8d AT 12" O.C. 1-3/8" EMBED	5/8" TYPE "X" GYPSUM SHEATHING BOARD	6d COOLER OR WALLBOARD NAIL @ 4" O.C. 1-1/4" EMBED	6d COOLER OR WALLBOARD NAIL @ 7" O.C. 1-1/4" EMBED	7,500 LB	(2) 0.162"ø NAILS AT 8" O.C.	(2)2X6
	4TH TO ROOF	7/16" ZIP WALL	8d AT 6" O.C. 1-3/8" EMBED	8d AT 12" O.C. 1-3/8" EMBED	5/8" TYPE "X" GYPSUM SHEATHING BOARD	6d COOLER OR WALLBOARD NAIL @ 4" O.C. 1-1/4" EMBED	6d COOLER OR WALLBOARD NAIL @ 7" O.C. 1-1/4" EMBED	2,200 LB	(2) 0.162"ø NAILS AT 12" O.C.	(2)2X6
	EXTERIOR UNIT SIDE				INTERIOR UNIT SIDE					
	LOCATION	SHEATHING MATERIAL	EDGE NAILING	FIELD NAILING	SHEATHING MATERIAL	EDGE NAILING	FIELD NAILING	UPLIFT AT END OF WALL	BOTTOM SILL PLATE ATTACHMENT	# OF STUDS AT WALL ENDS
SW-5	GROUND TO 2ND	7/16" ZIP WALL	8d AT 4" O.C. 1-3/8" EMBED	8d AT 12" O.C. 1-3/8" EMBED	5/8" TYPE "X" GYPSUM SHEATHING BOARD	6d COOLER OR WALLBOARD NAIL @ 4" O.C. 1-1/4" EMBED	6d COOLER OR WALLBOARD NAIL @ 7" O.C. 1-1/4" EMBED	23,800 LB	5/8"ø ANCHOR BOLTS 5" EMBED AT 32" O.C.	(3)2X6
	2ND TO 3RD	7/16" ZIP WALL	8d AT 4" O.C. 1-3/8" EMBED	8d AT 12" O.C. 1-3/8" EMBED	5/8" TYPE "X" GYPSUM SHEATHING BOARD	6d COOLER OR WALLBOARD NAIL @ 4" O.C. 1-1/4" EMBED	6d COOLER OR WALLBOARD NAIL @ 7" O.C. 1-1/4" EMBED	15,000 LB	(2) 0.162"ø NAILS AT 6" O.C.	(2)2X6
	3RD TO 4TH	7/16" ZIP WALL	8d AT 4" O.C. 1-3/8" EMBED	8d AT 12" O.C. 1-3/8" EMBED	5/8" TYPE "X" GYPSUM SHEATHING BOARD	6d COOLER OR WALLBOARD NAIL @ 4" O.C. 1-1/4" EMBED	6d COOLER OR WALLBOARD NAIL @ 7" O.C. 1-1/4" EMBED	8,200 LB	(2) 0.162"ø NAILS AT 8" O.C.	(2)2X6
	4TH TO ROOF	7/16" ZIP WALL	8d AT 4" O.C. 1-3/8" EMBED	8d AT 12" O.C. 1-3/8" EMBED	5/8" TYPE "X" GYPSUM SHEATHING BOARD	6d COOLER OR WALLBOARD NAIL @ 4" O.C. 1-1/4" EMBED	6d COOLER OR WALLBOARD NAIL @ 7" O.C. 1-1/4" EMBED	3,200 LB	(2) 0.162"ø NAILS AT 12" O.C.	(2)2X6

SEE FASTENING SCHEDULE ON S2.05 FOR ALL FASTENING DEPTHS NOT SHOWN

FOOTING SCHEDULE

MARK	SIZE W x D x L	REINFORCING
F30	3'-0"x3'-0"x 12" DEEP	(4) #5 EA. WAY BOTTOM

CONCRETE COVER SCHEDULE

CONCRETE CAST AGAINST AND PERMANENTLY EXPOSED TO EARTH:	3"
CONCRETE EXPOSED TO EARTH OR WEATHER:	
#6 OR LARGER	2"
#5 OR SMALLER	1 1/2"
CONCRETE NOT EXPOSED TO WEATHER OR IN CONTACT WITH GROUND:	
SLABS, WALLS, JOISTS (#11 AND SMALLER)	3/4"
BEAMS, COLUMNS (PRIMARY REINF., TIES, STIRRUPS, SPIRALS)	1 1/2"
CONCRETE FOR COASTAL EXPOSURES EXPOSED TO WEATHER:	
WALL & SLABS	2"
OTHER MEMBERS	2 1/2"

SHRINKAGE CHART

	INCHES PER FLOOR	INCHES CUMULATIVE
ROOF	.239	.956
4th	.239	.717
3rd	.239	.478
2nd	.239	.239

ALL AND ANY CONTINUOUS ROD SYSTEM SHALL HAVE SHRINKAGE COMPENSATION DEVICES.

DESIGN LOAD SCHEDULE

(ALL LOADS SHOWN ARE IN POUNDS PER SQ. FT.)

COMPONENT \ AREA	ELEVATED LIVING FLOOR AREAS	CORRIDORS	BALCONIES	ROOF	STAIRS	SLAB ON GRADE
SYSTEM	5	5	5		50	
BOTTOM CHORD DEAD	5	10	10	10		
PARTITIONS	5					
TOP CHORD DEAD				15		
TOPPING	10	10	30			
TOTAL DEAD LOAD	25	25	45	25	50	
TOTAL LIVE LOAD	40	40	40	20	100	100
TOTAL LOAD	65	65	85	45	150	100

ROOF WIND PRESSURE (PSF) Vasd
COMPONENTS AND CLADDING

EFFECTIVE WIND AREA (SQ. FT.)	ROOF AREA 1	2	3
10	+14.1/-22.3	+14.1/-38.9	+14.1/-57.5
20	+12.8/-21.7	+12.8/-35.8	+12.8/-53.8
50	+11.2/-20.9	+11.2/-31.7	+11.2/-48.8
100	+9.9/-20.3	+9.9/-28.6	+9.9/-45.1

NOTES:
1. WIND DESIGN PER FBC-6TH EDITION (2017)
2. +: INDICATES WIND PRESSURE
   -: INDICATES WIND SUCTION
3. WALL DISTANCE A = 7.5 FT (COMPONENTS AND CLADDING)
4. FOR EFFECTIVE WIND AREAS BETWEEN THOSE GIVEN ABOVE THE LOAD MAY BE INTERPOLATED, OTHERWISE USE THE LOAD ASSOCIATED WITH THE LOWER EFFECTIVE WIND AREA

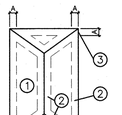

PLAN

DOOR & WINDOW WIND PRESSURE (PSF) Vasd
COMPONENTS AND CLADDING

SIZE OF WALL OPENING (SQ. FT.)	WALL AREA 4	5
10	+24.4/-26.5	+24.4/-32.7
20	+23.3/-25.4	+23.3/-30.5
50	+21.9/-23.9	+21.9/-27.6
100	+20.8/-22.8	+20.8/-25.4

NOTES:
1. WIND DESIGN PER FBC-6TH EDITION (2017)
2. +: INDICATES WIND PRESSURE
   -: INDICATES WIND SUCTION
3. WALL DISTANCE A = 7.5 FT (COMPONENTS AND CLADDING)
4. FOR WALL OPENINGS BETWEEN THOSE GIVEN ABOVE THE LOAD MAY BE INTERPOLATED, OTHERWISE USE THE LOAD ASSOCIATED WITH THE LOWER WALL OPENING AREA.

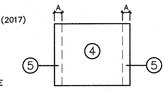

WALL ELEVATION

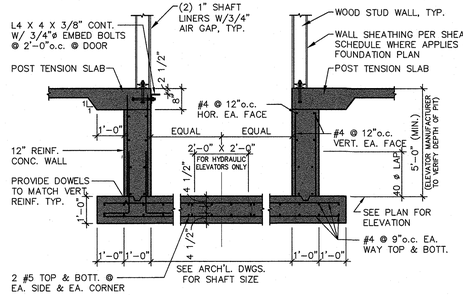

ELEVATOR PIT SECTION

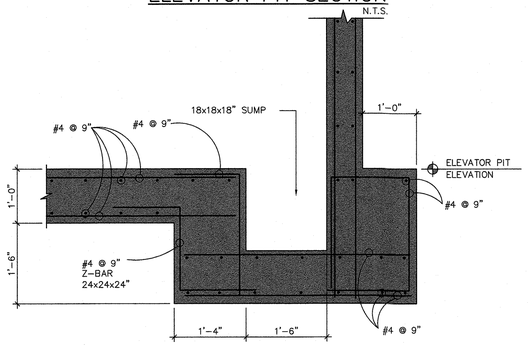

TYPICAL SUMP DETAIL
(AT SIDE WALL)

NOTES:
1. SEE BRACING PLAN FOR TYPE & LOCATION OF SHEAR WALL; SEE SHEAR WALL SCHEDULE FOR NAILING REQUIREMENTS.
2. SEE BRACING PLAN & TYPICAL SHEAR WALL HOLDOWN ELEVATION FOR END CONNECTION AND FRAMING REQUIRED AT EACH FLOOR.
3. NAIL ALL STUDS AT INTERSECTIONS TOGETHER W/ .148"ø x 3" NAILS @ 4" o.c. (STAGGER WHEN POSSIBLE).
4. SHEAR WALL EDGE NAILING TO BE STAGGERED WHEN POSSIBLE.

CONTINUOUS TIE DOWN ROD SYSTEMS:
CONTRACTOR SHALL PROVIDE A CONTINUOUS ROD TIE DOWN SYSTEM USING CLP ROD SYSTEMS, SIMPSON RTUD TAKE UP DEVICES, OR OTHER SIMILAR PRODUCTS. THESE SHALL BE USED AT ENDS OF SHEAR WALLS, AND FOR ALL ROOF TRUSS BEARING WALLS FOR CONTINUOUS ROOF UPLIFT HOLD DOWN CONNECTIONS.
ALL PRODUCTS MUST BE SIGNED AND SEALED BY THE SPECIALTY DESIGN PROFESSIONAL, BEING ABLE TO MEET OR EXCEED THE SCHEDULED UPLIFT LOADS SPECIFIED IN THE SHEAR WALL SCHEDULE.

WOOD POST SCHEDULE

MARK	SIZE (IN.)	SIMPSON BASE/CAP	TOTAL SERVICE LOAD (KIPS)
WP-1	3.50 x 5.25 PSL	ABU44Z/PC6Z	20
WP-2	3.50 x 7.00 PSL	ABU44/LCE 4 EA SIDE	12
WP-3	(3)2x6	–	–

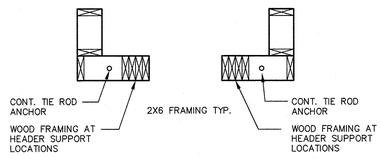

BALCONY COLUMN PIER FRAMING

HEADER SCHEDULE

MARK	SIZE (IN.)	BEARING STUDS
H-1	(2) 2 X 6	(3") B & (2) FULL HEIGHT
H-2	(2) 2 X 10	(3") B & (2) FULL HEIGHT
H-3	(3) 2 X 6	(1.5") B & (1) FULL HEIGHT
H-4	(3) 2 X 8	(3") B & (2) FULL HEIGHT
H-5	(3) 2 X 10	(3") B & (2) FULL HEIGHT
H-6	(3) 1.75 X 9.25 LVL	(WP-2) B & (2) FULL HEIGHT
H-7	(3) 1.75 X 11.25 LVL	(WP-2) B & (2) FULL HEIGHT
H-8	(3) 1.75 X 18.0 LVL	(3") B & (1) FULL HEIGHT

NOTE:
1. B INDICATES BEARING STUDS, TOTAL WIDTH OF SUPPORT.
2. PROVIDE 1/2" INSULATION BOARDS BETWEEN EXTERIOR HEADERS FOR FLITCH BEAM TO MAKE FULL 5.5" WIDTH.

LAKE COUNTY BUILDING SERVICES
Any errors or omissions in these plans shall be made to conform with the applicable code requirements per Florida Building Code, in accordance with Section 107. Plans were reviewed for code compliance and shall be kept on job site.

WALL FRAMING SCHEDULE

LOCATION	SYP #2 TYP. 1ST FLR	2ND FLR	3RD FLR	4TH FLR
CORRIDOR	2x4 @ 16" O.C.	2x4 @ 16" O.C.	2x4 @ 16" O.C.	2x4 @ 16" O.C.
EXTERIOR	2x6 @ 16" O.C.	2x6 @ 16" O.C.	2x6 @ 16" O.C.	2x6 @ 16" O.C.
TENANT SEPARATION WALL	(2)2x4 @ 16" O.C.	(2)2x4 @ 16" O.C.	2x4 @ 16" O.C.	2x4 @ 16" O.C.
INTERIOR UNIT BEARING WALL	(3)2x4 @ 16" O.C.	(2)2x4 @ 16" O.C.	(2)2x4 @ 16" O.C.	2x4 @ 16" O.C.

– FINGER JOINTED STUDS (FJS) ARE NOT ALLOWED FOR HEADERS, BEARING WALLS OR EXTERIOR WALLS. FJS ARE ALLOWED FOR INTERIOR PARTITION, NON-LOAD BEARING STUDS.

RECEIVED FEB 1 6 2019

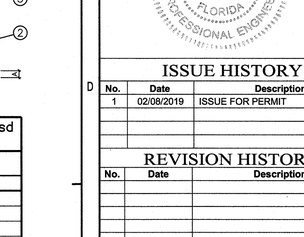

ISSUE HISTORY

No.	Date	Description
1	02/08/2019	ISSUE FOR PERMIT

REVISION HISTORY

No.	Date	Description

© 2017 These documents and their contents are the property of FUGLEBERG KOCH - AA26002103, and are issued only for the specific project noted on these drawings. Any reproductions, revisions, or modifications of these documents without the expressed written consent of Fugleberg Koch, is prohibited by law.

FUGLEBERG KOCH
2555 Temple Trail, Winter Park, FL 32789 (407) 629-0595
www.fuglebergkoch.com AA26002103

CONSULTANT
GUTHERMAN STRUCTURAL INC.
130 CROWN OAK CENTRE DR.
LONGWOOD FL 32750
P: 407.701.0875 LIC. #28863
Gutherman STRUCTURAL
John Gutherman Jr., P.E.
FL REG. #60880

SUMMER BAY APTS. II
LAKE COUNTY, FL

Drawn:	JRIVERA
Checked:	JGUTHERMAN
Approved:	JGUTHERMAN
Date:	02/08/2019
Project #:	5389

SCHEDULES AND TYPICAL DETAILS

S2.02

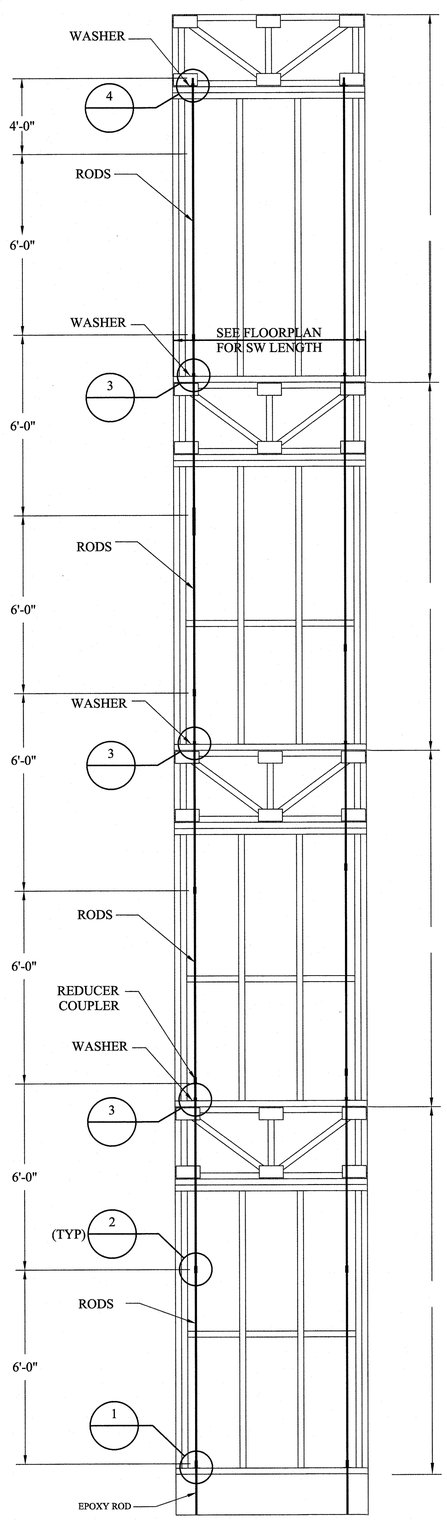

REFER TO FLOOR PLANS FOR SHEARWALL LOCATIONS.

TYP. CONT. SHEARWALL HOLDOWNS

SCALE: NTS

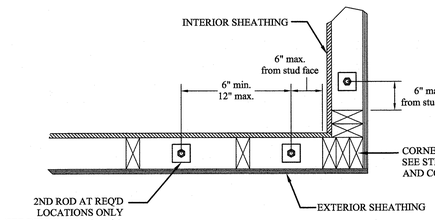

1 TYPICAL CONNECTION AT CORNER

Scale : 1½" = 1'-0"

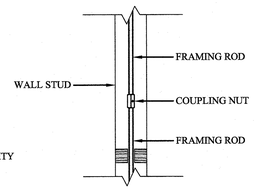

2 COUPLING NUT CONNECTION

1½" = 1'-0"

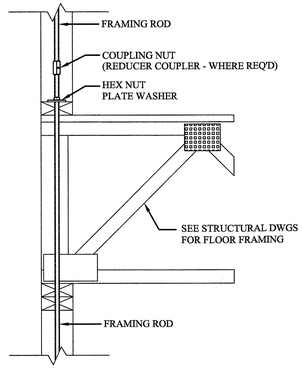

3 FLOOR CONNECTION (RESTRAINED)

1½" = 1'-0"

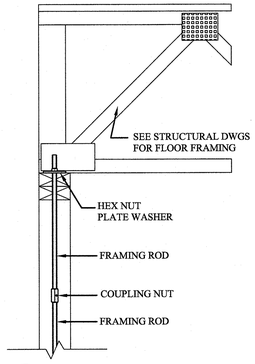

4 ROOF CONNECTION

1½" = 1'-0"

4 STORY SYSTEM TO ALLOW FOR 1" TOTAL SHRINKAGE MAX

CONTINUOUS ROD TAKE UP DEVICE MANUFACTURER SHALL PROVIDE SIGNED AND SEALED DRAWINGS FROM AN ENGINEER REGISTERED IN THE STATE OF FLORIDA. CONTINUOUS ROD ENGINEER SHALL PROVIDE UPLIFT RODS FOR SHEAR WALL ENDS, TO RESIST THE LOADS IN THE SHEAR WALL SCHEDULE, AND UNIFORMLY SPACED UPLIFT RODS FOR ROOF TOP PLATE TRUSS UPLIFT RESISTANCE. DETAILS SHOWN ARE CLP STANDARD DETAILS, SHOWN FOR INTENT ONLY. FINAL CONTINUOUS ROD SHOP DRAWING LAYOUT AND MATERIALS SHALL BE REVIEWED PRIOR TO INSTALLATION.

REFER TO SHEAR WALL SCHEDULE FOR COMPRESSION STUDS AS ALL WALLS HAVE DIFFERENT CONFIGURATIONS

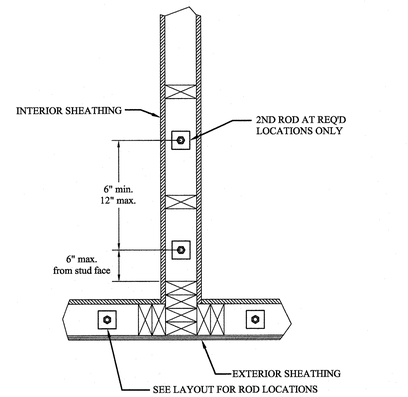

5 TYPICAL CONNECTION AT WALL INTERSECTION

Scale : 1½" = 1'-0"

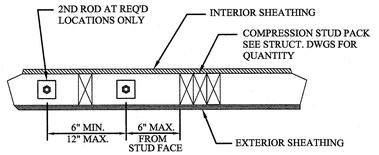

6 TYPICAL CONNECTION AT END OF WALL

SCALE: 1½" = 1'-0"

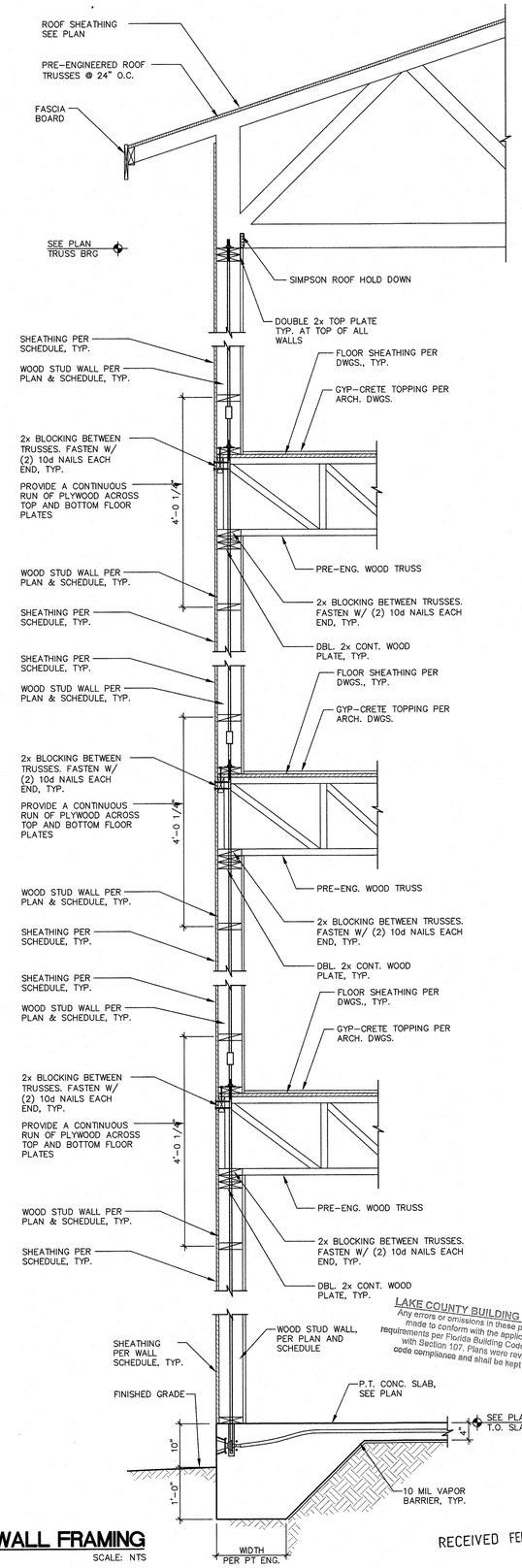

TYP. WALL FRAMING

SCALE: NTS

LAKE COUNTY BUILDING SERVICES
Any errors or omissions in these plans shall be made to conform with the applicable code requirements per Florida Building Code, in accordance with Section 107. Plans were reviewed for code compliance and shall be kept on job site.

RECEIVED FEB 14 2019

PERMIT REVIEW STAMP

JOHN GUTHERMAN JR LICENSE No. 60880 STATE OF FLORIDA PROFESSIONAL ENGINEER

ISSUE HISTORY

No.	Date	Description
1	02/08/2019	ISSUE FOR PERMIT

REVISION HISTORY

No.	Date	Description

© 2017 These documents and their contents are the property of FUGLEBERG KOCH - AA26002103 and are issued only for the specific project noted on these documents. Any reproductions, revisions or modifications of these documents without the expressed written consent of Fugleberg Koch is prohibited by law.

FUGLEBERG KOCH
2555 Temple Trail, Winter Park, FL 32789 (407) 629-0595
www.fuglebergkoch.com AA26002103

CONSULTANT
GUTHERMAN STRUCTURAL INC.
130 CROWN OAK CENTRE DR.
LONGWOOD FL 32750
P: 407.701.0875 LIC. #28863
Gutherman STRUCTURAL
John Gutherman Jr., P.E.
FL REG. #60880

SUMMER BAY APTS. II	Drawn: JRIVERA
LAKE COUNTY, FL	Checked: JGUTHERMAN
	Approved: JGUTHERMAN
	Date: 02/08/2019
	Project #: 5389

TYPICAL CONTINUOUS TIE ROD DETAILS

S2.03

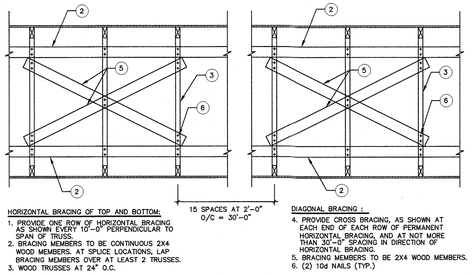

HORIZONTAL BRACING OF TOP AND BOTTOM:
1. PROVIDE ONE ROW OF HORIZONTAL BRACING AS SHOWN EVERY 10'-0" PERPENDICULAR TO SPAN OF TRUSS.
2. BRACING MEMBERS TO BE CONTINUOUS 2X4 WOOD MEMBERS. AT SPLICE LOCATIONS, LAP BRACING MEMBERS OVER AT LEAST 2 TRUSSES.
3. WOOD TRUSSES AT 24" O.C.

DIAGONAL BRACING :
4. PROVIDE CROSS BRACING, AS SHOWN AT EACH END OF EACH ROW OF PERMANENT HORIZONTAL BRACING, AND AT NOT MORE THAN 20'-0" SPACING IN DIRECTION OF HORIZONTAL BRACING.
5. BRACING MEMBERS TO BE 2X4 WOOD MEMBERS.
6. (2) 10d NAILS (TYP.)

TYPICAL BRACING DETAIL
N.T.S.

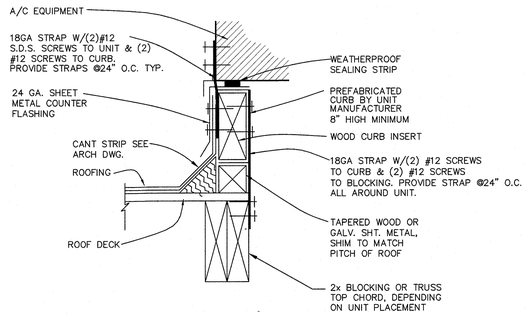

TYPICAL CURB UPLIFT DETAIL
N.T.S.

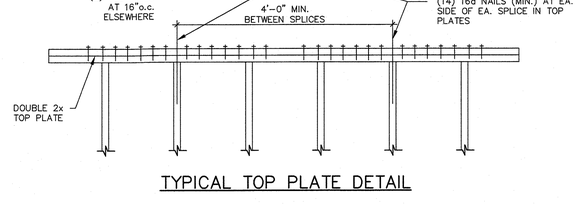

TYPICAL TOP PLATE DETAIL

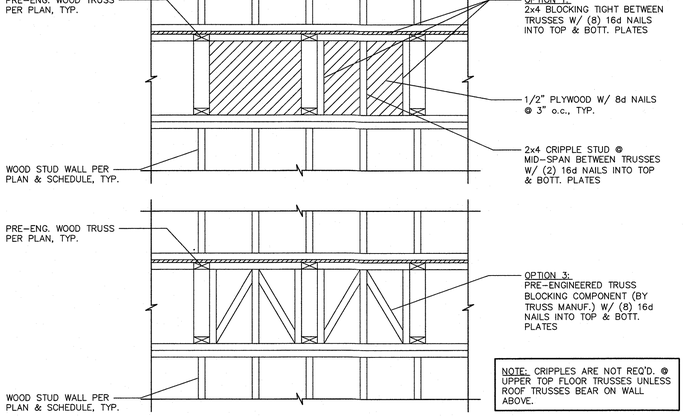

NOTE: CRIPPLES ARE NOT REQ'D. @ UPPER TOP FLOOR TRUSSES UNLESS ROOF TRUSSES BEAR ON WALL ABOVE.

TYPICAL SHEARWALL BLOCKING
N.T.S.

1 / S2.04

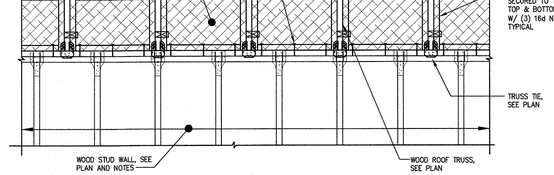

TYPICAL PLYWOOD BRACING DETAIL

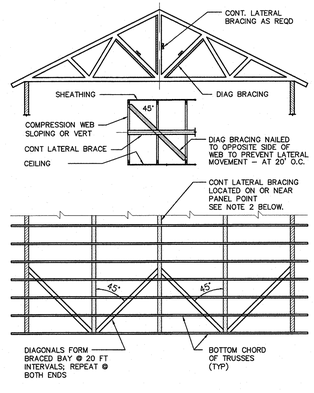

1. WOOD TRUSSES SHALL BE BRACED AND ERECTED IN ACCORDANCE WITH THE "TRUSS PLATE INSTITUTE" BRACING WOOD TRUSSES: COMMENTARY AND RECOMMENDATIONS, HIB-91, BRACING IN THE PLAN OF THE WEB MEMBERS :
   a. THE TRUSS FABRICATOR SHALL PROVIDE AND LOCATE CONTINUOUS LATERAL BRACING FOR EACH TRUSS WEB MEMBER AS REQUIRED.
   b. LATERAL BRACING SHALL BE RESTRAINED BY DIAGONAL BRACING (MIN. 2" THICK NOMINAL LUMBER). THIS BRACING IS TO BE CONTINUOUS.
   c. A MINIMUM OF TWO ROWS OF DIAGONAL BRACING IS REQUIRED, ONE AT EACH VERTICAL WEB MEMBER CLOSEST TO BEARING LOCATIONS.
2. THE BOTTOM CHORDS SHALL BE BRACED BY CONTINUOUS LATERAL BRACING SPACED AT 8'-0" O. C. WITH A CEILING ATTACHED TO BOTTOM OF TRUSSES. OR IF NO CEILING IS ATTACHED TO BOTTOM OF TRUSSES BRACING SHALL BE MIN. 2 x 4 @ 36" O.C. NAILED TO THE TOP OF THE BOTTOM CHORD. DIAGONALS PLACED AT 45° TO THE LATERAL BRACES SHALL BE LOCATED AT EACH END. IF BUILDING EXCEEDS 60 FEET IN LENGTH, DIAGONAL BRACING SHOULD BE REPEATED AT 20 FOOT INTERVALS.
3. TOP CHORD BRACING :
   a. IF PLYWOOD DECKING IS APPLIED DIRECTLY TO TOP CHORD, PROPERLY LAPPED AND NAILED TO DEVELOP DIAPRAGHM ACTION, BRACING IS NOT REQUIRED.
   b. IF PURLINS ARE USED, DIAGONAL TOP CHORD BRACING IS REQUIRED AT EACH END. IF BUILDING EXCEEDS 80 FEET IN LENGTH, DIAGONAL BRACING SHOULD BE REPEATED AT 20 FOOT INTERVALS.

WOOD TRUSS BRACING DETAIL

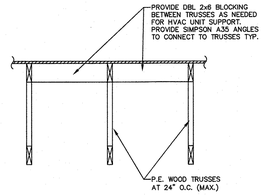

TYPICAL BLOCKING FOR HVAC CURB DETAIL
N.T.S.

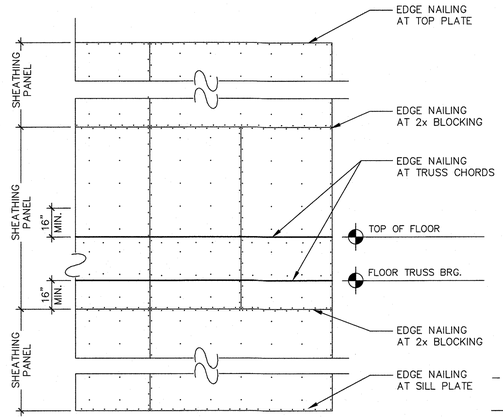

1. ALL HORIZONTAL & VERTICAL JOINTS SHALL OCCUR OVER FRAMING & SHALL BE ATTACHED IN SPACING SHOWN ON SHEAR WALL SCHEDULE @ SHEAR WALLS. SOLID 2X BLOCKING OR FRAMING MEMBER SHALL BE AT ALL PANEL EDGES.
2. FOLLOW SHEATHING ORIENTATION DIAGRAM.

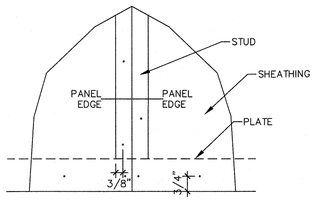

SHEAR WALL SHEATHING LAYOUT AND NAILING PATTERNS
1-1/2"=1'-0"

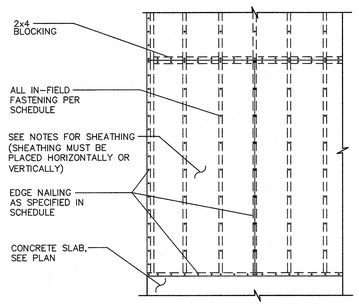

SHEATHING ATTACHMENT SCHEDULE
N.T.S.

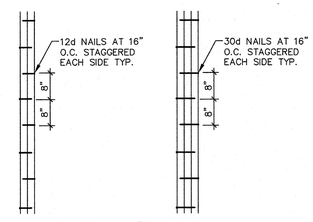

DOUBLE 2x BUILT UP STUD NAILING PATTERN

TRIPLE 2x BUILT UP STUD NAILING PATTERN

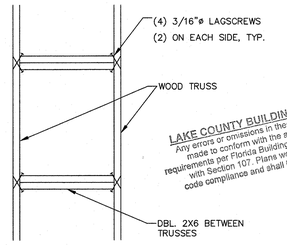

TYPICAL RTU SUPPORT DETAIL
SCALE: N.T.S.

RECEIVED FEB 14 2019

LAKE COUNTY BUILDING SERVICES
Any errors or omissions in these plans shall be made to conform with the applicable code requirements per Florida Building Code, in accordance with Section 107. Plans were reviewed for code compliance and shall be kept on job site.

PERMIT REVIEW STAMP
JOHN G. GUTHERMAN, JR.
LICENSE
No. 60880
STATE OF FLORIDA
PROFESSIONAL ENGINEER

ISSUE HISTORY

No.	Date	Description
1	02/08/2019	ISSUE FOR PERMIT

REVISION HISTORY

No.	Date	Description

© 2017 These documents and their contents are the property of FUGLEBERG KOCH + ASSOCIATES, and are issued only for the specific project noted on these drawings. Any reproductions, revisions, or modifications of these documents without the expressed written consent of Fugleberg Koch, is prohibited by law.

FUGLEBERG KOCH
2555 Temple Trail, Winter Park, FL 32789 (407) 629-0595
www.fuglebergkoch.com AA26002103

CONSULTANT
GUTHERMAN STRUCTURAL INC.
130 CROWN OAK CENTRE DR.
LONGWOOD FL 32750
P: 407.701.6875 LIC. #28863
Gutherman STRUCTURAL
John Gutherman Jr., P.E.
FL REG. #60880

SUMMER BAY APTS. II	Drawn: JRIVERA
LAKE COUNTY, FL	Checked: JGUTHERMAN
	Approval: JGUTHERMAN
	Date: 02/08/2019
	Project #: 5389
SCHEDULES AND TYPICAL DETAILS	
S2.04	

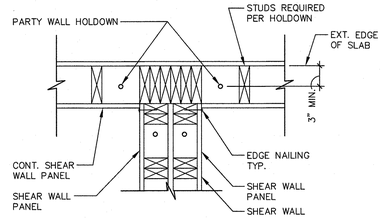

SHEAR WALL @ INTERSECTION PARTY WALLS

N.T.S.

1. ADDITIONAL STUDS MAY BE REQUIRED AT END. SEE TYPICAL SHEAR WALL HOLDOWN DETAILS.

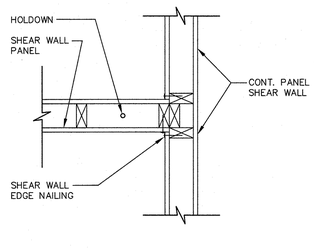

INTERSECTING SHEAR WALLS

N.T.S.

1. ADDITIONAL STUDS MAY BE REQUIRED AT END. SEE TYPICAL SHEAR WALL HOLDOWN DETAILS.

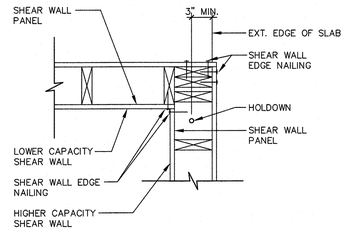

SHEAR WALLS @ INSIDE CORNER

N.T.S.

1. ONE HOLDOWN MAY BE DESIGNED FOR BOTH SHEAR WALLS SHOWN. SEE BRACING PLAN.
2. ADDITIONAL STUDS MAY BE REQUIRED AT THE CORNER. SEE TYPICAL SHEAR WALL HOLDOWN ELEVATIONS.

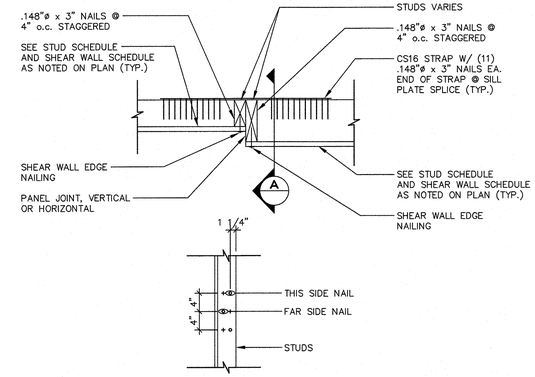

DETAIL A

TYPICAL STUD CHANGE IN SHEAR WALL

N.T.S.

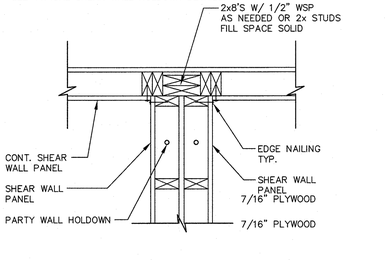

SHEAR WALL @ INTERSECTION PARTY WALLS

N.T.S.

1. ADDITIONAL STUDS MAY BE REQUIRED AT END. SEE TYPICAL SHEAR WALL HOLDOWN DETAILS.

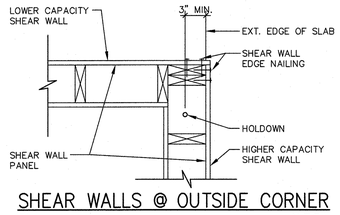

SHEAR WALLS @ OUTSIDE CORNER

N.T.S.

1. ONE HOLDOWN MAY BE DESIGNED FOR BOTH SHEAR WALLS SHOWN. SEE BRACING PLAN.
2. ADDITIONAL STUDS MAY BE REQUIRED AT THE CORNER. SEE TYPICAL SHEAR WALL HOLDOWN ELEVATIONS.

STUD ARRANGEMENTS AT CORNERS/INTERSECTIONS

N.T.S.

1 / S2.05

NAIL FASTENING SCHEDULE

LOCATION	COMMON NAIL SIZE	MINIMUM NOMINAL PANEL THICKNESS (IN)	MINIMUM FASTENER PENETRATION IN FRAMING MEMBER OR BLOCKING (IN)
SHEARWALLS	6d	5/8	1-1/4
	8d	7/16	1-3/8
	10d	15/32	1-1/2
ROOF AND WALLS (NOT FOR SHAERWALLS)	COMMON NAIL SIZE	MINIMUM NOMINAL PANEL THICKNESS (IN)	MINIMUM FASTENER PENETRATION (IN)
	8d	7/16	1-3/4
FLOORS	COMMON NAIL SIZE	MINIMUM NOMINAL PANEL THICKNESS (IN)	MINIMUM FASTENER PENETRATION (IN)
	10d	3/4	1-1/2
DOUBLE TOP PLATES	BOX/COMMON NAIL SIZE	MINIMUM NOMINAL BASE PLATE THICKNESS (IN)	MINIMUM FASTENER PENETRATION (IN)
	16d	1-1/2	1
FLOOR TRUSS NAILER TO LADDER TRUSS TOP CHORD	BOX/COMMON NAIL SIZE	MINIMUM NOMINAL BASE PLATE THICKNESS (IN)	MINIMUM FASTENER PENETRATION (IN)
	16d	1-1/2	1
BOTTOM SILL PLATE TO LADDER TRUSS	BOX/COMMON NAIL SIZE	MINIMUM NOMINAL BASE PLATE THICKNESS (IN)	MINIMUM FASTENER PENETRATION (IN)
	16d	1-1/2	1
LADDER TRUSS TO TOP PLATE	BOX/COMMON NAIL SIZE	MINIMUM NOMINAL BASE PLATE THICKNESS (IN)	MINIMUM FASTENER PENETRATION (IN)
	16d	1-1/2	1
BLOCKING TO TOP PLATE	BOX/COMMON NAIL SIZE	MINIMUM NOMINAL BASE PLATE THICKNESS (IN)	MINIMUM FASTENER PENETRATION (IN)
	16d	1-1/2	1

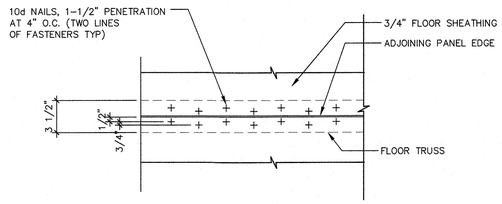

TYPICAL FLOOR SHEATING ATTACHMENT DETAIL

PLYWOOD SHEATHING NAILING SCHEDULE

ROOF AND WALL (NOT FOR SHEAR WALLS)

NAIL SIZE	NAIL SPACING	ZONE
8d (RING SHANK)	6" @ EDGES, 12" @ INTERMEDIATE SUPPORTS	ROOF (2) (3)
8d (RING SHANK)	6" @ EDGES, 12" @ INTERMEDIATE SUPPORTS	ROOF (1)
8d	6" @ EDGES, 12" @ INTERMEDIATE SUPPORTS	WALL (5)
8d	6" @ EDGES, 12" @ INTERMEDIATE SUPPORTS	WALL (4)

CORNER DISTANCE, A = 7.5 FEET

LAKE COUNTY BUILDING SERVICES
Any errors or omissions in these plans shall be made to conform with the applicable code requirements per Florida Building Code, in accordance with Section 107. Plans were reviewed for code compliance and shall be kept on job site.

RECEIVED FEB 14 2019

PERMIT REVIEW STAMP
JOHN GUTHERMAN, JR LICENSE No. 60880 STATE OF FLORIDA PROFESSIONAL ENGINEER

ISSUE HISTORY

No.	Date	Description
1	02/08/2019	ISSUE FOR PERMIT

REVISION HISTORY

No.	Date	Description

FUGLEBERG KOCH
2555 Temple Trail, Winter Park, FL 32789 (407) 629-0595
www.fuglebergkoch.com AA26002103

CONSULTANT
GUTHERMAN STRUCTURAL INC.
130 CROWN OAK CENTRE DR.
LONGWOOD FL 32750
P: 407.701.0875 LIC. #28863
Gutherman STRUCTURAL
John Gutherman Jr., P.E.
FL REG. #60880

SUMMER BAY APTS. II
LAKE COUNTY, FL

Drawn:	JRIVERA
Checked:	JGUTHERMAN
Approved:	JGUTHERMAN
Date:	02/08/2019
Project #:	5389

SCHEDULES AND TYPICAL DETAILS

S2.05

© 2017 These documents and their concepts are the property of FUGLEBERG KOCH - AA26002103, and are issued only for the specific project noted on these drawings. Any reproductions, revisions, or modifications of these documents without the expressed written consent of Fuglebergh Koch, is prohibited by law.

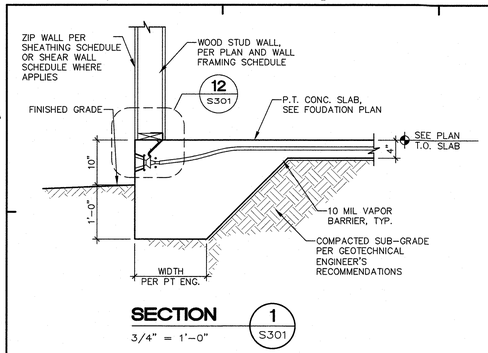

SECTION 1 S301
3/4" = 1'-0"

NOTE: COORDINATE EDGE OF SIDEWALK DETAIL W/ SITE/CIVIL DWGS, TYP.

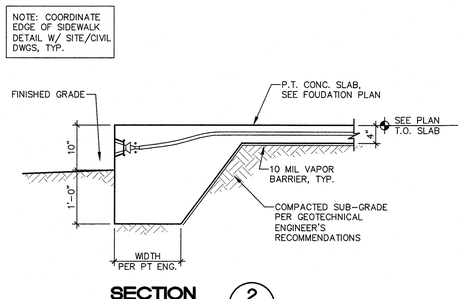

SECTION 2 S301
3/4" = 1'-0"

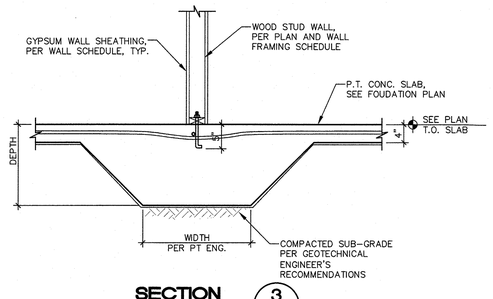

SECTION 3 S301
3/4" = 1'-0"

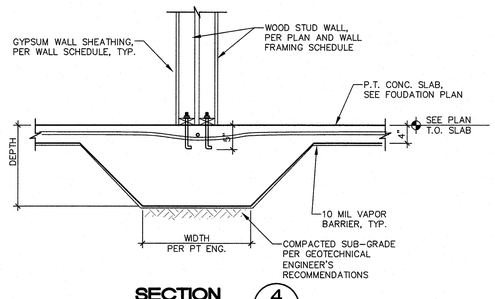

SECTION 4 S301
3/4" = 1'-0"

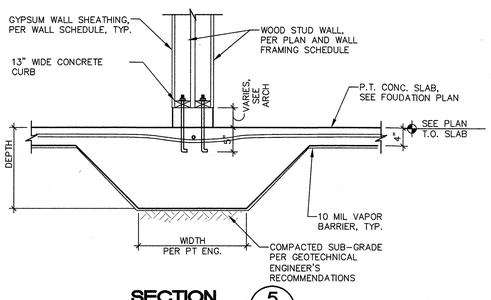

SECTION 5 S301
3/4" = 1'-0"

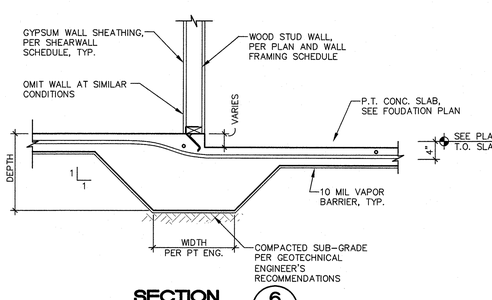

SECTION 6 S301
3/4" = 1'-0"

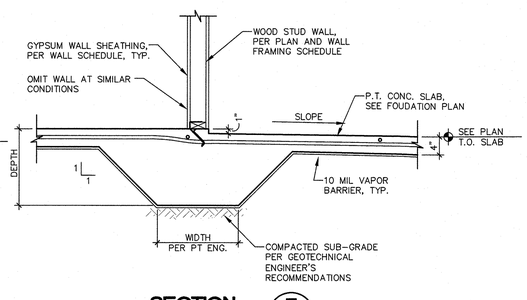

SECTION 7 S301
3/4" = 1'-0"

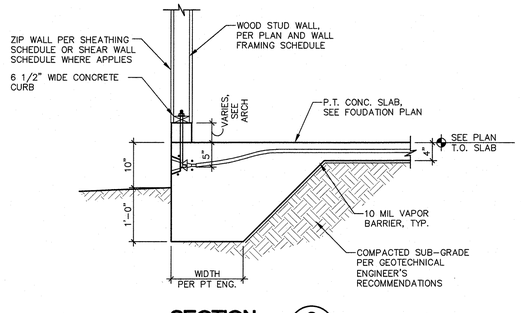

SECTION 8 S301
3/4" = 1'-0"

NOTE: TYPICAL EXTERIOR FOOTING AT GARAGE

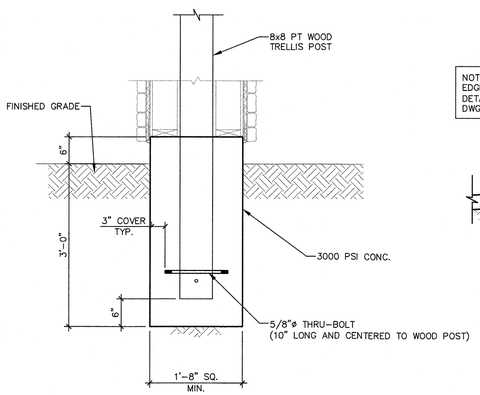

NOTE: TYPICAL WOOD TRELLIS POST EMBEDMENT BASE

SECTION 9 S301
3/4" = 1'-0"

NOTE: COORDINATE EDGE OF SIDEWALK DETAIL W/ SITE/CIVIL DWGS, TYP.

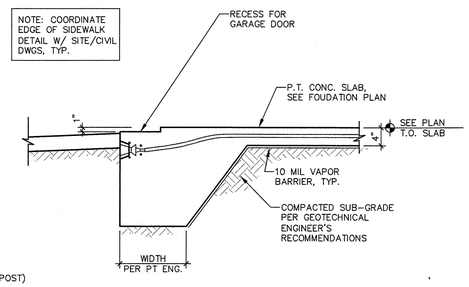

SECTION 10 S301
3/4" = 1'-0"

NOTE: THICKENED SLAB AT GARAGE

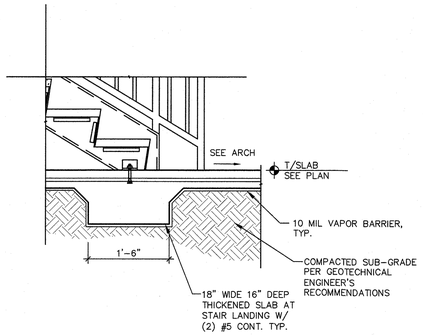

DETAIL 11 S301
1-1/2" = 1'-0"

NOTE: TYPICAL STAIR LANDING THICKENED SLAB

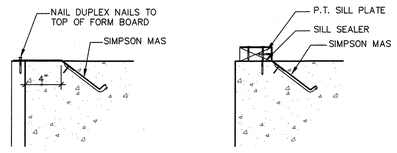

DETAIL 12 S301
1-1/2" = 1'-0"

NOTE: TYPICAL SIMPSON MAS INSTALL

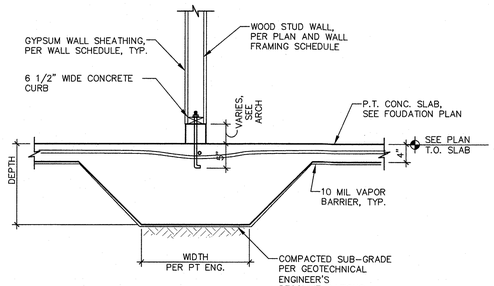

SECTION 13 S301
3/4" = 1'-0"

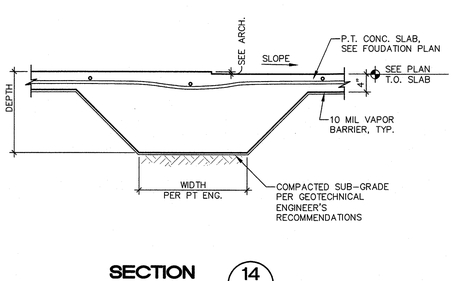

SECTION 14 S301
3/4" = 1'-0"

LAKE COUNTY BUILDING SERVICES
Any errors or omissions in these plans shall be made to conform with the applicable code requirements per Florida Building Code, in accordance with Section 107. Plans were reviewed for code compliance and shall be kept on job site.

RECEIVED FEB 14 2019

PERMIT REVIEW STAMP
JOHN G. GUTHERMAN, JR. LICENSE No. 60880 STATE OF FLORIDA PROFESSIONAL ENGINEER

ISSUE HISTORY

No.	Date	Description
1	02/08/2019	ISSUE FOR PERMIT

REVISION HISTORY

No.	Date	Description

© 2017 These documents and their contents are the exclusive property of FUGLEBERG KOCH AA26002103 and are issued one time specific project noted on these drawings. Any reproductions, revisions, or modifications of these documents without the expressed written consent of Fugleberg Koch, is prohibited by law.

FUGLEBERG KOCH
2555 Temple Trail, Winter Park, FL 32789 (407) 629-0595
www.fuglebergkoch.com AA26002103

CONSULTANT
GUTHERMAN STRUCTURAL INC.
130 CROWN OAK CENTRE DR.
LONGWOOD FL 32750
P: 407.701.0875 LIC. #28863
Gutherman STRUCTURAL
John Gutherman Jr., P.E.
FL. REG. #60880

SUMMER BAY APTS. II
LAKE COUNTY, FL

Drawn:	JRIVERA
Checked:	JGUTHERMAN
Approval:	JGUTHERMAN
Date:	02/08/2019
Project #:	5389

FOUNDATION SECTIONS

S3.01

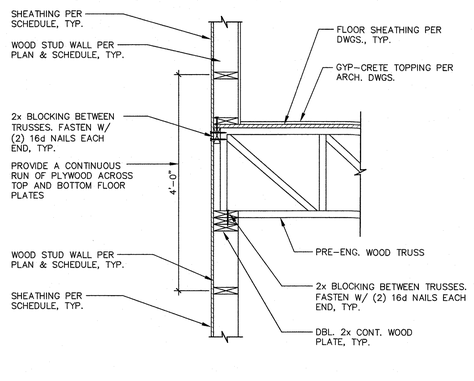

SECTION 1 S3.02
3/4"=1'-0"

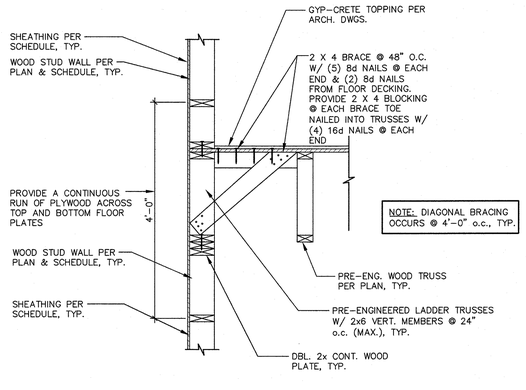

SECTION 2 S3.02
3/4"=1'-0"

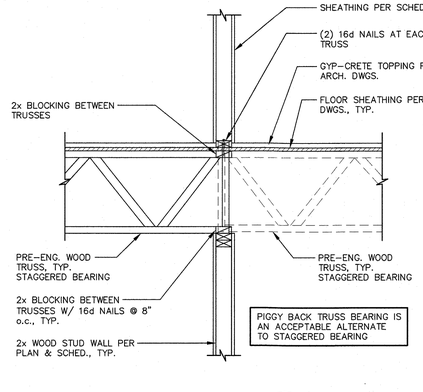

SECTION 3 S3.02
3/4"=1'-0"

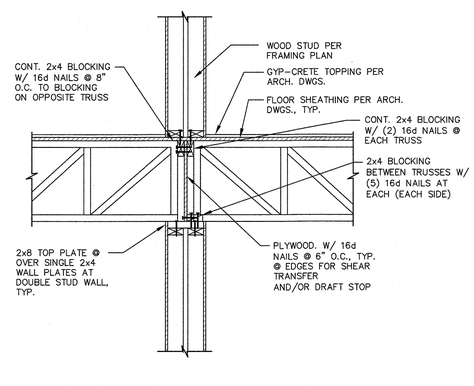

SECTION 4 S3.02
3/4"=1'-0"

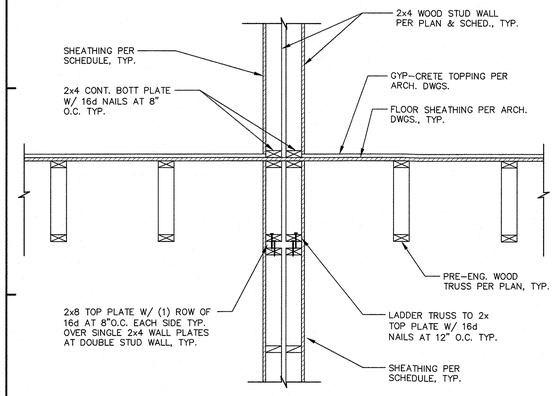

SECTION 5 S3.02
3/4"=1'-0"

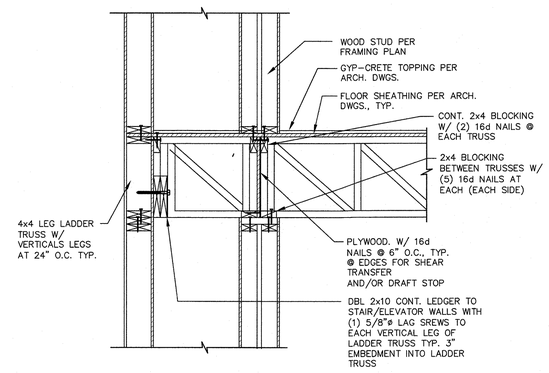

SECTION 6 S3.02
3/4"=1'-0"

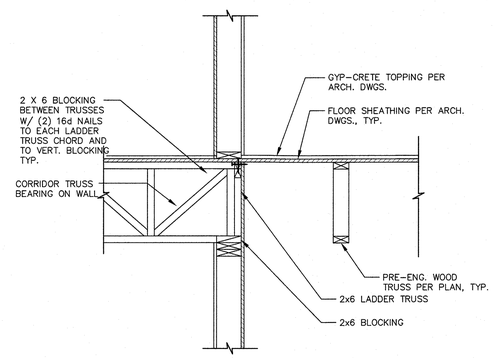

SECTION 7 S3.02
3/4"=1'-0"

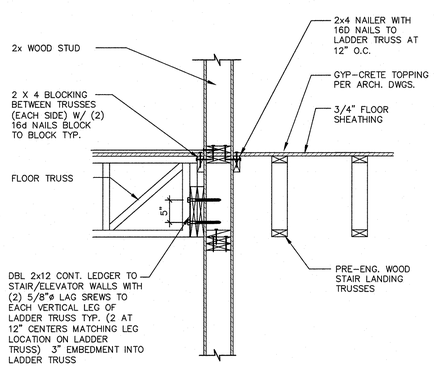

SECTION 8 S3.02
3/4"=1'-0"

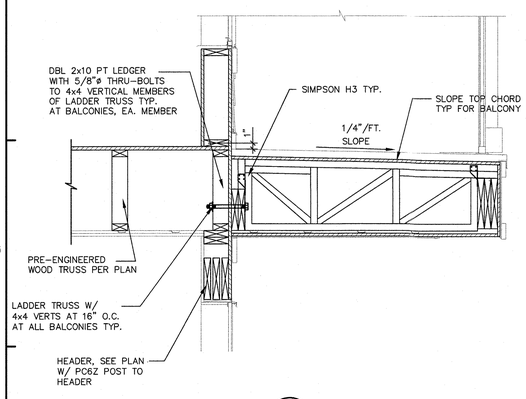

SECTION 9 S3.02
3/4"=1'-0"

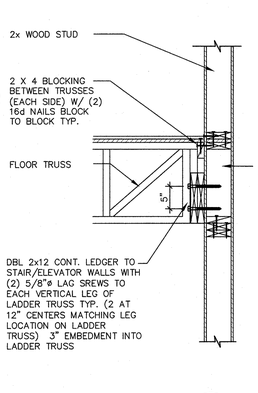

SECTION 10 S3.02
3/4"=1'-0"

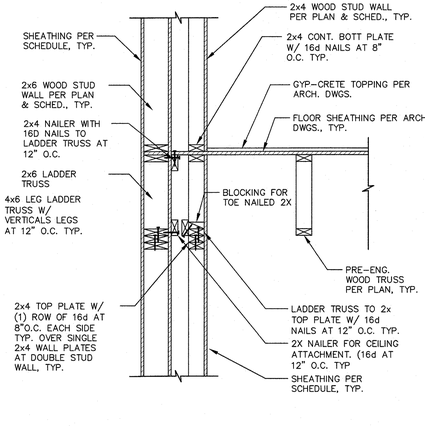

SECTION 11 S3.02
3/4"=1'-0"

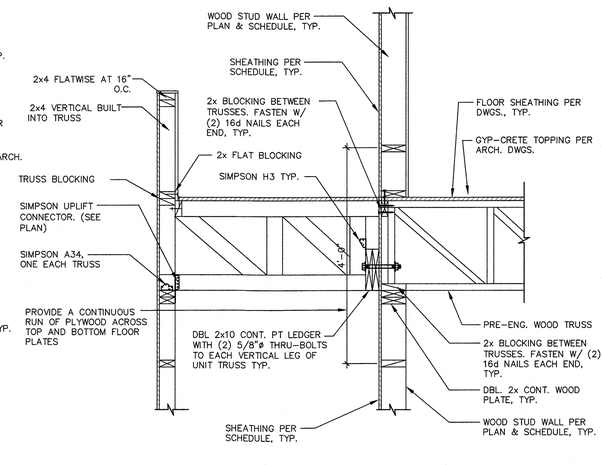

SECTION 12 S3.02
3/4"=1'-0"

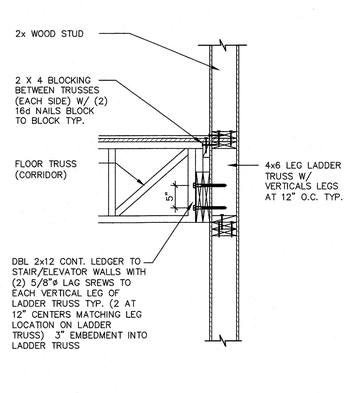

SECTION 13 S3.02
3/4"=1'-0"

LAKE COUNTY BUILDING SERVICES
Any errors or omissions in these plans shall be made to conform with the applicable code requirements per Florida Building Code, in accordance with Section 107. Plans were reviewed for code compliance and shall be kept on job site.

RECEIVED FEB 14 2019

PERMIT REVIEW STAMP
JOHN GUTHERMAN, JR
LICENSE
No. 80880
STATE OF
FLORIDA
PROFESSIONAL ENGINEER

ISSUE HISTORY

No.	Date	Description
1	02/08/2019	ISSUE FOR PERMIT

REVISION HISTORY

No.	Date	Description

© 2017 These documents and their contents are the property of FUGLEBERG KOCH - AA26002103, and are issued only for the specific project noted on these drawings. Any reproductions, or modifications of these documents without the expressed written consent of Fugleberg Koch, is prohibited by law.

FUGLEBERG KOCH
2555 Temple Trail, Winter Park, FL 32789 (407) 629-0595
www.fuglebergkoch.com AA26002103

CONSULTANT
GUTHERMAN STRUCTURAL INC.
130 CROWN OAK CENTRE DR.
LONGWOOD FL 32750
P: 407.701.0875 LIC. #28863
Gutherman STRUCTURAL
John Gutherman Jr., P.E.
FL REG. #80880

Drawn:	JRIVERA
Checked:	JGUTHERMAN
Approved:	JGUTHERMAN
Date:	02/08/2019
Project #:	5389

SUMMER BAY APTS. II
LAKE COUNTY, FL

STRUCTURAL FRAMING SECTIONS

S3.02

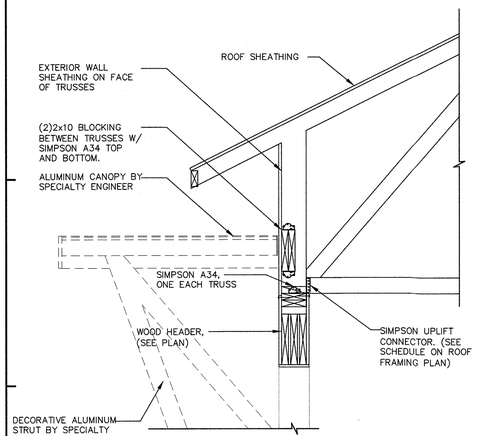

SECTION 1 S3.03
3/4"=1'-0"

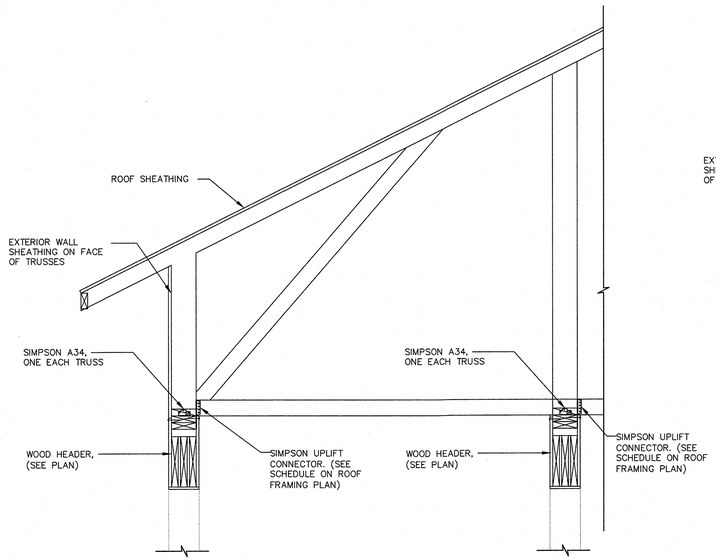

SECTION 2 S3.03
3/4"=1'-0"

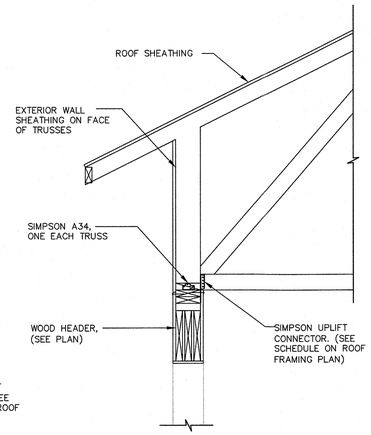

SECTION 3 S3.03
3/4"=1'-0"

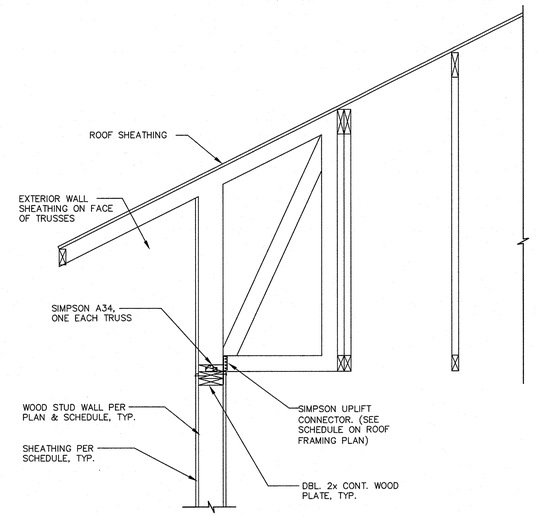

SECTION 4 S3.03
3/4"=1'-0"

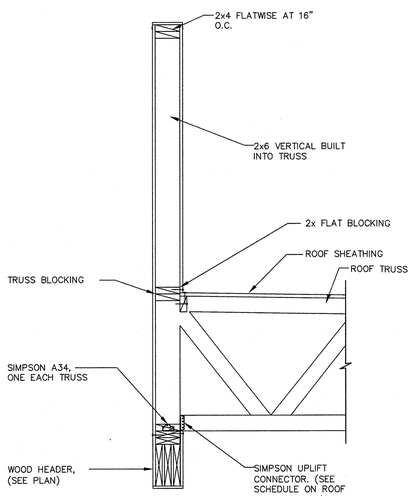

SECTION 5 S3.03
3/4"=1'-0"

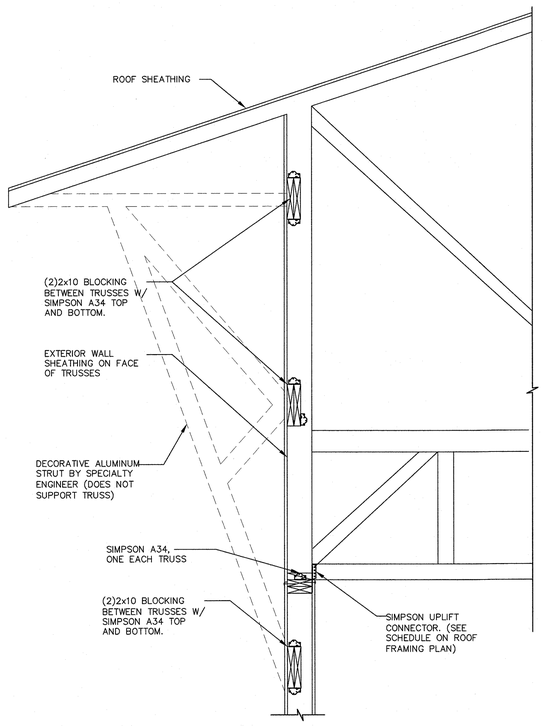

SECTION 6 S3.03
3/4"=1'-0"

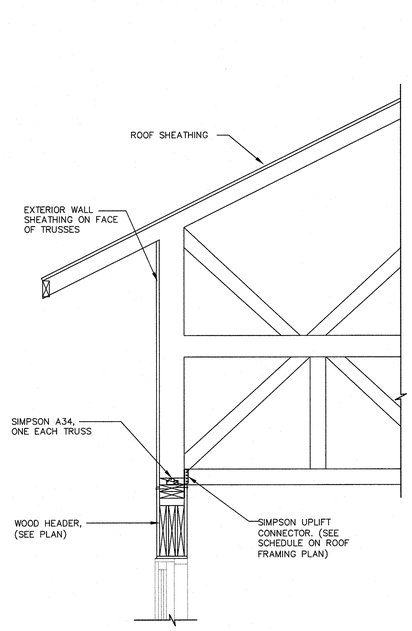

SECTION 7 S3.03
3/4"=1'-0"

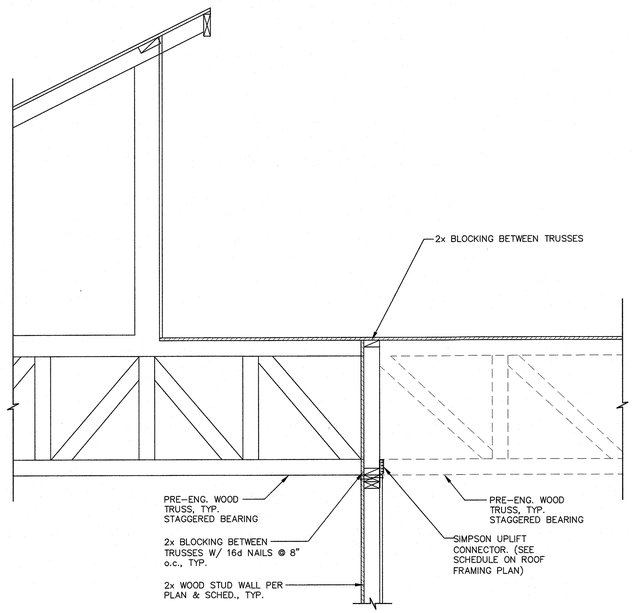

SECTION 8 S3.03
3/4"=1'-0"

LAKE COUNTY BUILDING SERVICES
Any errors or omissions in these plans shall be made to conform with the applicable code requirements per Florida Building Code, in accordance with Section 107. Plans were reviewed for code compliance and shall be kept on job site.

RECEIVED FEB 14 2019

PERMIT REVIEW STAMP
JOHN GUTHERMAN JR. LICENSE No. 66880 STATE OF FLORIDA PROFESSIONAL ENGINEER

ISSUE HISTORY

No.	Date	Description
1	02/08/2019	ISSUE FOR PERMIT

REVISION HISTORY

No.	Date	Description

© 2017 These documents and their contents are the property of FUGLEBERG KOCH - AA26002103, and are issued only for the specific project noted on these drawings. Any reproductions, revisions, or modifications of these documents without the expressed written consent of Fugleberg Koch, is prohibited by law.

FUGLEBERG KOCH
2555 Temple Trail, Winter Park, FL 32789 (407) 629-0595
www.fuglebergkoch.com AA26002103

CONSULTANT
GUTHERMAN STRUCTURAL, INC.
130 CROWN OAK CENTRE DR.
LONGWOOD FL 32750
P: 407.701.0875 LIC. #28863
Gutherman STRUCTURAL
John Gutherman Jr., P.E.
FL. REG. #66880

SUMMER BAY APTS. II
LAKE COUNTY, FL

Drawn:	JRIVERA
Checked:	JGUTHERMAN
Approval:	JGUTHERMAN
Date:	02/08/2019
Project #:	5389

STRUCTURAL FRAMING SECTIONS

S3.03

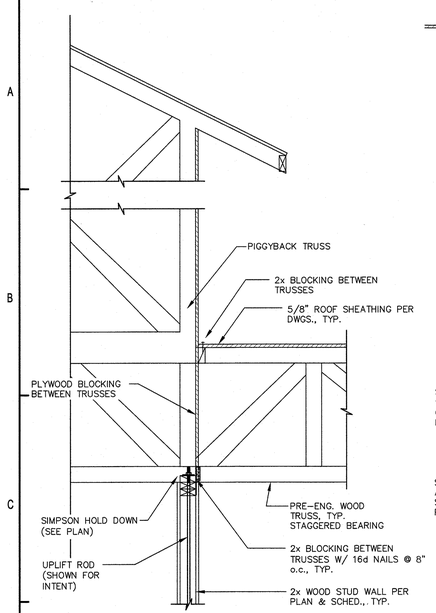

SECTION 1 — 3/4"=1'-0" — S3.04

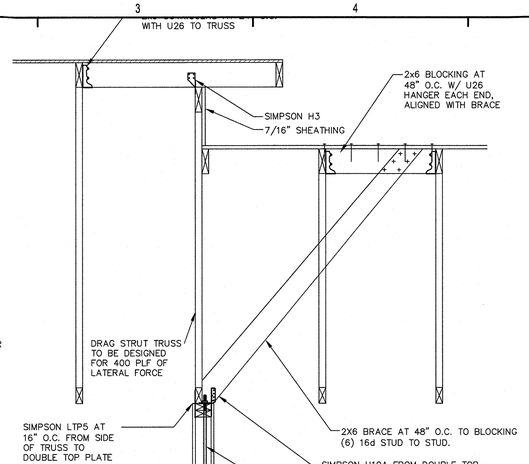

SECTION 2 — 3/4"=1'-0" — S3.04

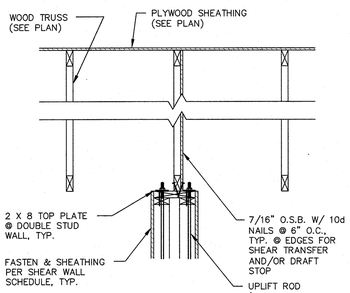

SECTION 3 — 3/4"=1'-0" — S3.04

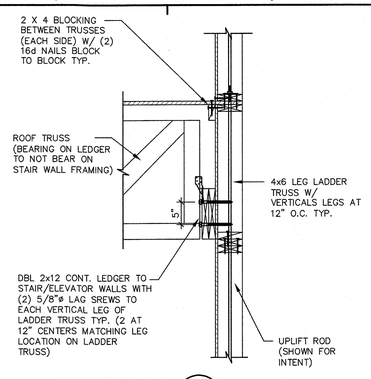

SECTION 4 — 3/4"=1'-0" — S3.04

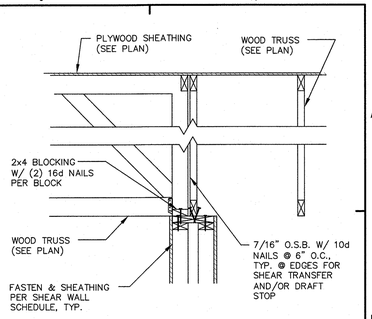

SECTION 5 — 3/4"=1'-0" — S3.04

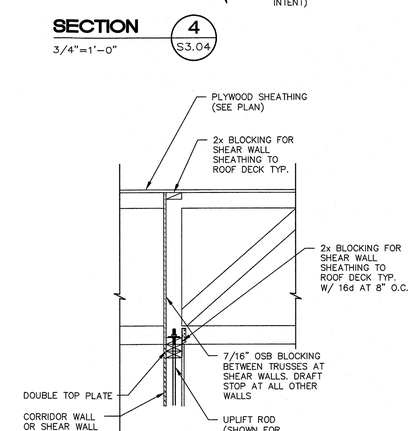

SECTION 8 — 3/4"=1'-0" — S3.04

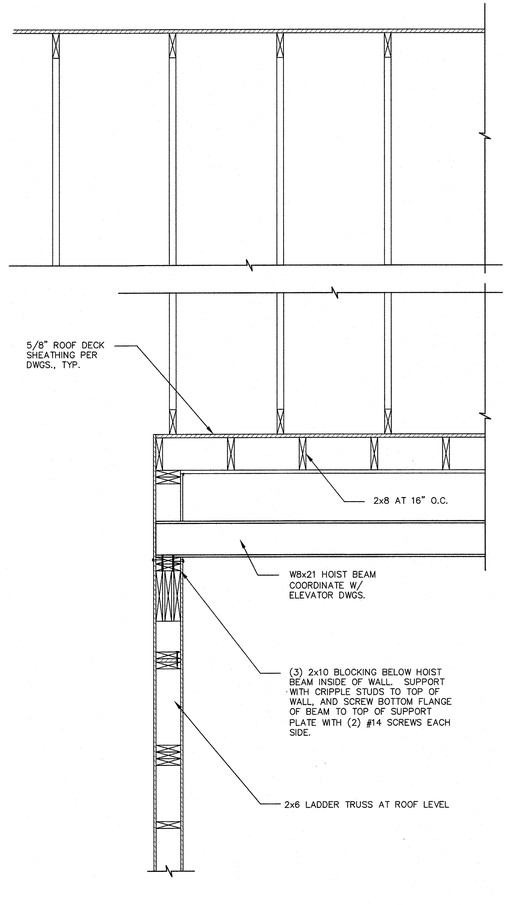

SECTION 6 — 3/4"=1'-0" — S3.04

SECTION 7 — 3/4"=1'-0" — S3.04

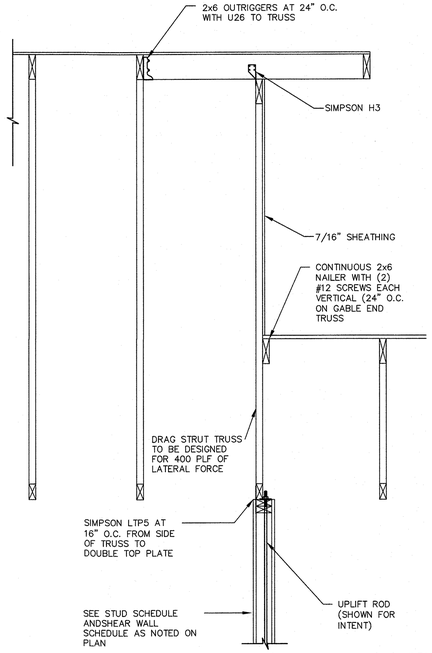

SECTION 9 — 3/4"=1'-0" — S3.04

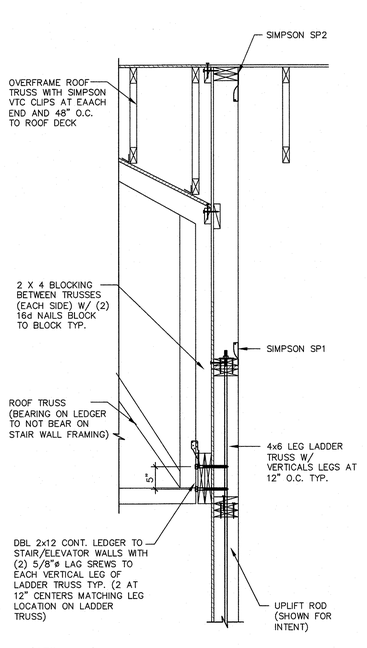

SECTION 10 — 3/4"=1'-0" — S3.04

LAKE COUNTY BUILDING SERVICES
Any errors or omissions in these plans shall be made to conform with the applicable code requirements per Florida Building Code, in accordance with Section 107. Plans were reviewed for code compliance and shall be kept on job site.

RECEIVED FEB 14 2019

2/14/19

PERMIT REVIEW STAMP

JOHN GUTHERMAN, JR. LICENSE No. 60880 STATE OF FLORIDA PROFESSIONAL ENGINEER

ISSUE HISTORY

No.	Date	Description
1	02/08/2019	ISSUE FOR PERMIT

REVISION HISTORY

No.	Date	Description

© 2017 These documents and their contents are the property of FUGLEBERG KOCH • AA26002103 and are issued only for the specific project noted on these drawings. Any reproductions, revisions, or modifications of these documents without the expressed written consent of Fuglebergkoch is prohibited by law.

FUGLEBERG KOCH
2555 Temple Trail, Winter Park, FL 32789 (407) 629-0595
www.fuglebergkoch.com AA26002103

CONSULTANT
GUTHERMAN STRUCTURAL INC.
130 CROWN OAK CENTRE DR.
LONGWOOD FL 32750
P: 407.701.0875 LIC. #28863
Gutherman STRUCTURAL
John Gutherman Jr., P.E.
FL. REG. #60880

Drawn:	JRIVERA
Checked:	JGUTHERMAN
Approved:	JGUTHERMAN
Date:	02/08/2019
Project #:	5389

SUMMER BAY APTS. II
LAKE COUNTY, FL

STRUCTURAL FRAMING SECTIONS

S3.04

ABBREVIATIONS

ABV	ABOVE
ADJ	ADJUSTABLE
AF	AIRFOIL
AFF	ABOVE FINISHED FLOOR
AC	AIR CONDITIONER
ACU	AIR CONDITIONING UNIT
AHU	AIR HANDLING UNIT
AP	ACCESS PANEL
BAS	BUILDING AUTOMATION SYSTEM
BI	BACKWARD INCLINE
BLDG	BUILDING
BHP	BRAKE HORSEPOWER
BTUH	BRITISH THERMAL UNIT PER HOUR
CD	CONDENSATE DRAIN
CFM	CUBIC FEET PER MINUTE
CLG	CEILING
CW	CHILLED WATER
CWR	CHILLED WATER RETURN
CWS	CHILLED WATER SUPPLY
CONC	CONCRETE
COND	CONDENSATE
CONT	CONTINUOUS
CO	CARBON MONOXIDE
COP	COEFFICIENT OF PERFORMANCE
CU	CONDENSING UNIT
DB	DRYBULB
DWDI	DOUBLE WIDTH, DOUBLE INLET
DWGS	DRAWINGS
DX	DIRECT EXPANSION
EF	EXHAUST FAN
EXH	EXHAUST
EA	EACH
EAT	ENTERING AIR TEMPERATURE
EER	ENERGY EFFICIENCY RATIO
ELECT	ELECTRICAL
ENT	ENTERING
EQ	EQUAL
ER	EXHAUST REGISTER
EWT	ENTERING WATER TEMPERATURE
FC	FORWARD CURVED
FCU	FAN COIL UNIT
FD	FIRE DAMPER
FL	FLOOR
FLEX	FLEXIBLE CONNECTOR OR DUCT
FPM	FEET PER MINUTE
F/S	COMBINATION FIRE AND SMOKE DAMPER
FT. H_2O	FEET WATER GAUGE
F	DEGREES FAHRENHEIT
GA	GAUGE
GAL	GALLON
GALV	GALVANIZED
GPM	GALLONS PER MINUTE
HP	HORSEPOWER
HTWR	HIGH TEMPERATURE HOT WATER RETURN
HTWS	HIGH TEMPERATURE HOT WATER SUPPLY
HW	HOT WATER
HWR	HOT WATER RETURN
HWS	HOT WATER SUPPLY
HVAC	HEATING VENTILATING AND AIR CONDITIONING
HV	HEATING AND VENTILATING
IN.WG	INCHES WATER GAGE
KW	KILOWATTS
LAT	LEAVING AIR TEMPERATURE
LD	LINEAR DIFFUSER
LWT	LEAVING WATER TEMPERATURE
MAX	MAXIMUM
MBH	1000 X BTUH
MIN	MINIMUM
MVD	MANUAL VOLUME DAMPER
MZ	MULTI-ZONE
N.T.S.	NOT TO SCALE
OA	OUTSIDE AIR
OBMVD	OPPOSED BLADE MANUAL VOLUME DAMPER
OPD	OPEN DRIP PROOF
PROP	PROPELLER
PCR	PRE-CONDITIONED AIR SYSTEM RETURN WATER
PCS	PERCENT
PD	PRESSURE DROP
PERF. PL.	PERFORATED PLATE
PLBG	PLUMBING
PSIA	POUNDS PER SQUARE INCH ABSOLUTE
PSIG	POUNDS PER SQUARE INCH GAUGE
RA	RETURN AIR
RD	RADIATION DAMPER
REG	REGISTER
REQ'D	REQUIRED
RG	RETURN AIR GRILLE
RH	RELATIVE HUMIDITY
RPM	REVOLUTIONS PER MINUTE
RR	RETURN AIR REGISTER
RTU	ROOFTOP UNIT
SA	SUPPLY AIR
SF	SUPPLY FAN
SDT	SMOKE DETECTOR
SD	SUPPLY DIFFUSER
SDMP	SMOKE DAMPER
SQ.FT.	SQUARE FOOT
SR	SUPPLY REGISTER
STR	STARTER
SWSI	SINGLE WIDTH, SINGLE INLET
SZ	SINGLE ZONE
TEFC	TOTALLY ENCLOSED FAN COOLED
TEMP	TEMPERATURE
TG	TRANSFER GRILLE
T/O	TRANSFER OPENING ABOVE CEILING
T'STAT	THERMOSTAT
TYP	TYPICAL
VFDC	VARIABLE FREQUENCY DRIVE CONTROLLER
VAV	VARIABLE AIR VOLUME
VS	VARIABLE SPEED
W	WATTS
W/	WITH
W/O	WITHOUT
WB	WETBULB
ZD	ZONE DAMPER

GENERAL NOTES

1. INSTALL EQUIPMENT AND MATERIALS IN COMPLIANCE WITH MANUFACTURER'S MINIMUM CLEARANCE REQUIREMENTS AND RECOMMENDATIONS.
2. COMPLY WITH THE LATEST EDITIONS OF NFPA AND THE LATEST ADOPTED EDITION FLORIDA BUILDING CODE (MECHANICAL, PLUMBING AND GAS).
3. ALL MATERIALS SHALL FIT THE SPACE AVAILABLE. VERIFY DIMENSIONS AND CLEARANCES ON BUILDING PLANS PRIOR TO COMMENCING WORK.
4. CONTRACTOR IS RESPONSIBLE FOR TESTING AND BALANCING OF AIR SYSTEMS IN ACCORDANCE WITH AABC GUIDELINES. A TEST AND BALANCE REPORT SHALL BE SUBMITTED TO THE ARCHITECT FOR APPROVAL.
5. PROVIDE 45 DEGREE BRANCH TAKE-OFF PER SMACNA FIG. 2-8 ON ALL RECTANGULAR DUCT TAKE-OFFS.
6. PROVIDE AND INSTALL DUCT MOUNTED HINGED ACCESS DOORS FOR ALL SMOKE AND/OR FIRE DAMPERS, NOT OTHERWISE ACCESSIBLE.
7. CONTRACTOR SHALL COORDINATE VOLTAGE AND PHASE OF EACH PIECE OF EQUIPMENT WITH THE ELECTRICAL CONTRACTOR PRIOR TO ORDERING AND SHALL COORDINATE WITH ALL OTHER TRADES PRIOR TO OR INSTALLING EQUIPMENT AND MATERIALS.
8. COORDINATE ALL HVAC SYSTEM DRAWINGS WITH EXISTING/NEW TRUSS TO AVOID INTERFERENCE BETWEEN MECHANICAL SYSTEMS AND ROOF STRUCTURE. CONTRACTOR SHALL BE RESPONSIBLE FOR ALL COSTS ASSOCIATED WITH TRUSS INTERFERENCE THAT OCCURS IN THE FIELD DURING CONSTRUCTION. COORDINATE IN ADVANCE. DUCT SIZES MAY BE REVISED TO FIT TRUSS SYSTEM SO LONG AS THE EQUIVALENT INSIDE CROSS SECTIONAL AREA IS NOT DECREASED.
9. GAUGES AND CONSTRUCTION FOR DUCTWORK SHALL CONFORM TO THE LATEST EDITION OF SMACNA'S HVAC DUCT CONSTRUCTION STANDARDS,
10. TRANSITION RECTANGULAR DUCTWORK ON BOTTOM AND SIDES. MAINTAIN TOP OF DUCTWORK LEVEL AND HIGH AS POSSIBLE. FLEXIBLE DUCT RUN-OUTS TO CEILING DIFFUSERS SHALL BE AS STRAIGHT AS POSSIBLE AND FREE OF SAGS & KINKS. FLEX DUCT SHALL BE THE SAME SIZE AS THE DIFFUSER NECK IT SERVES.
11. ALL DUCT TRANSITIONS FROM SQUARE TO ROUND SHALL BE SMOOTH SQUARE TO ROUND TRANSITIONS. SPIN-IN FITTINGS AT THE END OF CAPPED DUCTS ARE NOT ACCEPTABLE. DUCT DIMENSIONS SHOWN ARE INSIDE CLEAR DIMENSIONS.
12. THE CONTRACTOR SHALL FULFILL ALL REQUIREMENTS OF THE CONTRACT DOCUMENTS AND SHALL COMPLETE THE WORK SHOWN ON THESE DRAWINGS. ALL SYSTEMS SHALL BE FINISHED, TESTED AND BALANCED, ADJUSTED, AND PROVEN TO BE FULLY OPERATIONAL AND USEABLE.
13. ADJUST ALL DIFFUSERS IN CORRIDORS OR WITHIN THREE (3) FEET OF A WALL TO PROVIDE 2-WAY OR 3-WAY BLOW AWAY FROM OR PARALLEL TO WALLS. ALL DIFFUSERS SHALL HAVE 4-WAY BLOW UNLESS NOTED OTHERWISE.
14. PORTIONS OF DUCTWORK VISIBLE THROUGH GRILLES AND REGISTERS IN FINISHED AREAS SHALL BE PAINTED FLAT BLACK.
15. ALL DAMPERS IN AND ABOVE CEILING SHALL BE ACCESSIBLE. CONTRACTOR SHALL COORDINATE ALL ACCESS PANELS IN CEILINGS OR WALLS WITH ARCHITECTURAL REFLECTED CEILING PLANS AND INTERIOR DRAWINGS FOR PROPER LOCATION.
16. MOUNT THERMOSTATS WHERE INDICATED ON PLANS 48" A.F.F. UNLESS NOTED OTHERWISE. IN HANDICAPPED ACCESSIBLE AREAS, MOUNT CONTROLS AT 48" ABOVE FINISHED FLOOR.
17. COORDINATE DUCTWORK AND PIPING WITH PLUMBING, FIRE PROTECTION AND ELECTRICAL. MAKE OFFSETS AND TRANSITIONS TO COORDINATE WITH OTHER TRADES WITHOUT ANY ADDITIONAL EXPENSE TO THE CONTRACT.
18. SEAL ALL TRANSVERSE JOINTS AND FITTINGS WITH DUCT SEALER.
19. TRAP AND ROUTE CONDENSATE DRAINS LINES, FULL SIZE OF UNIT CONNECTION, AS INDICATED. SLOPE 1/8" PER FOOT.
20. ALTERNATE MANUFACTURERS AND MODELS WILL BE REVIEWED. THERE MAY BE ARCHITECTURAL, STRUCTURAL AND ELECTRICAL CHANGES RESULTING FROM THE ALTERNATES. THE COST OF IMPLEMENTING AND ENGINEERING THESE CHANGES SHALL BE BORNE BY THE MECHANICAL SUBCONTRACTOR.
21. PIPE AND DUCT ROUTING SHOWN IS SCHEMATIC. PROVIDE ANY ADDITIONAL OFFSETS AND FITTINGS, INCLUDING DIVIDED DUCTS, REQUIRED FOR PROPER INSTALLATION AND TO MAINTAIN CLEARANCES AS ENCOUNTERED IN THE FIELD.
22. COORDINATE CEILING MOUNTED AIR DEVICE LOCATION WITH REFLECTED CEILING PLAN AND OTHER TRADES.
23. ALL CONTROL WIRING AND CONDUIT SHALL COMPLY WITH NEC DIVISION 16 SPECIFICATIONS.
24. PROVIDE MATERIALS WHICH HAVE A FLAME SPREAD RATING OF 25 OR LESS AND A SMOKE DEVELOPED RATING OF 50 OR LESS WHEN TESTED IN ACCORD WITH ASTM E84.
25. SLEEVE AND FIRE STOP PENETRATIONS THROUGH FIRE RATED SYSTEMS TO MAINTAIN RATING OF SYSTEM. USE MINIMUM GALVANIZED STEEL GAUGE DUCT AS REQUIRED TO MAINTAIN RATING OF SYSTEM.
26. THE TABC SHALL BE EMPLOYED DIRECTLY BY THE GENERAL CONTRACTOR WHO SHALL BE SOLELY RESPONSIBLE FOR ITS PERFORMANCE AND THE TIMELY SCHEDULE OF ITS OPERATION.
27. WHERE THE EXHAUST DUCT IS CONCEALED WITHIN THE BUILDING CONSTRUCTION, THE EQUIVALENT LENGTH OF THE DUCT SHALL BE IDENTIFIED ON A PERMENANT LABEL OR TAG. THE LABEL OR TAG SHALL BE LOCATED WITHIN 6 FEET OF THE EXHAUST DUCT CONNECTION.
28. REFER TO ARCHITECTURE PLANS FOR ALL RELATED DETAILS.

NOTE:

GENERAL NOTES ON THIS MECHANICAL SHEET ARE FOR GENERAL REFERENCE PURPOSES ONLY. ALL OF THESE NOTES MAY NOT BE USED FOR THIS PROJECT.

LEGEND

	SUPPLY DIFFUSER. (4-WAY)
	RETURN OR OUTDOOR AIR GRILLE
	EXHAUST GRILLE
	SUPPLY DUCT UP SECTION (RECTANGULAR)
	RETURN DUCT UP SECTION (RECTANGULAR)
	EXHAUST DUCT UP SECTION (RECTANGULAR)
	SUPPLY DUCT DOWN SECTION (RECTANGULAR)
	RETURN DUCT DOWN SECTION (RECTANGULAR)
	EXHAUST DUCT DOWN SECTION (RECTANGULAR)
	SUPPLY DUCT UP SECTION (ROUND).
	SUPPLY DUCT DOWN SECTION (ROUND).
	LINEAR SLOT DIFFUSER
	EXISTING LINEAR SLOT DIFFUSER (LIGHT LINETYPE)
A/B	RECTANGULAR DUCTWORK WITH TAKE-OFF, BALANCING DAMPER AND INSULATED FLEXIBLE ROUND DUCT. SAME SIZE AS DIFFUSER INLET UNLESS NOTED OTHERWISE. FIRST DIMENSION IS THAT OF SIDE SHOWN.
A ⌀	ROUND DUCTWORK.
	CONICAL FITTING WITH DAMPER ON BRANCH CONNECTION TO RECTANGULAR MAIN (PROVIDE DAMPER IN LOW PRESSURE DUCTWORK ONLY).
	EXISTING DUCTWORK TO REMAIN (LIGHT LINETYPE)
R	DUCT OFFSETS UP (RISE) IN DIRECTION INDICATED.
D	DUCT OFFSETS DOWN (DROP) IN DIRECTION INDICATED.
	OPPOSED BLADE VOLUME DAMPER (OBD).
	MANUAL DAMPER
	FLEXIBLE DUCT CONNECTION.
	FIRE DAMPER WITH ACCESS PANEL.
	COMBINATION FIRE/SMOKE DAMPER WITH ACCESS PANEL.
	EXISTING DUCTWORK TO BE REMOVED (DASHED LINETYPE)
	DUCT MOUNTED SMOKE DETECTOR PROVIDED AND WIRED BY ELECTRICAL CONTRACTOR AND INSTALLED IN DUCT BY MECHANICAL CONTRACTOR. REFER TO SPECIFICATIONS FOR CONTROL REQUIREMENTS.
A-100 (MARK-CFM)	AIR DEVICE TAG
	SIDEWALL TRANSFER GRILLE
	SIDEWALL SUPPLY REGISTER
	SIDEWALL RETURN GRILLE OR OUTSIDE AIR LOUVER
	SIDEWALL EXHAUST GRILLE
TS	WALL MOUNTED DDC TEMPERATURE SENSOR MOUNT 48" ABOVE FINISHED FLOOR.
T	WALL MOUNTED THERMOSTAT MOUNT 48" ABOVE FINISHED FLOOR.
C	WALL MOUNTED CO SENSOR MOUNT 48" ABOVE FINISHED FLOOR.
H	WALL MOUNTED DDC HUMIDITY SENSOR MOUNT 48" ABOVE FINISHED FLOOR.
H^S	WALL MOUNTED HUMIDISTAT SENSOR MOUNT 48" ABOVE FINISHED FLOOR.
A / B	PHOTO DETAIL OR SECTION IDENTIFICATION TARGET A = DETAIL NUMBER. B = SHEET NUMBER ON WHICH DETAIL IS LOCATED.
RD	RADIATION DAMPER INSTALLED IN AIR DEVICE
RD	RADIATION DAMPER INSTALLED IN DUCT.
	ELBOW WITH TURNING VANES

X	REFERENCE NOTES
X	REFERENCE NOTE - MULTI-DISCIPLINE SHEETS
	FLOW DIRECTION
	INDICATES POINT OF CONNECTION BETWEEN NEW AND EXISTING.
	POINT OF DISCONNECT
CWS	CONDENSER WATER SUPPLY PIPING.
CWR	CONDENSER WATER RETURN PIPING.
BCWS	BUILDING CONDENSER WATER SUPPLY PIPING.
BCWR	BUILDING CONDENSER WATER RETURN PIPING.
CHWS	CHILLED WATER SUPPLY PIPING.
CHWR	CHILLED WATER RETURN PIPING.
HWS	HEATING WATER SUPPLY PIPING.
HWR	HEATING WATER RETURN PIPING.
CD	CONDENSATE DRAIN PIPING.
R	REFRIGERANT PIPING
FS	FLOW SENSOR.
SP	STATIC PRESSURE TRANSMITTER ASSEMBLY.
L=1/4W, MIN. 4" / 45° / W	RECTANGULAR BRANCH DUCT CONNECTION. (PROVIDE BALANCING DAMPER AT ALL BRANCH CONNECTIONS)
	TEE (PLAN, UP, DOWN).
	ELBOW (PLAN, UP, DOWN).
	VALVE.
	TWO WAY MOTORIZED CONTROL VALVE.
	THREE WAY MOTORIZED CONTROL VALVE.
	PRESSURE REDUCING VALVE.
	FLOW CONTROL VALVE.
	BALL VALVE FOR PIPING 2-INCHES AND SMALLER, BUTTERFLY VALVE FOR PIPING 2-1/2 INCHES AND LARGER.
	BUTTERFLY VALVE.
	CHECK VALVE.
	STRAINER.
	BALANCE VALVE WITH INTEGRAL TAPS FOR CONNECTION OF DIFFERENTIAL PRESSURE METER. VALVE SHALL HAVE NAMEPLATE INDICATING WATER FLOW RATE VERSUS VALVE PRESSURE DROP.
A	AUTOMATIC FLOW CONTROL VALVE WITH INTEGRAL TEMPERATURE AND PRESSURE TEST PORTS.
	UNION.
	VENTURI FLOW METER.
	PRESSURE AND/OR TEMPERATURE PORT
	THERMOMETER.
	PRESSURE GAUGE WITH GAUGE COCK.
	FLEXIBLE CONNECTION.
	PRESSURE RELIEF VALVE.
M	MOTORIZED ACTUATOR
	OPENING IN WALL ABOVE CEILING.
AHU 3 (EQUIPMENT TYPE / MARK)	EQUIPMENT TAG
UC	1" DOOR UNDER CUT. ARROW INDICATES DIRECTION OF FLOW

NOTE:

SYMBOLS SHOWN ON THIS MECHANICAL LEGEND ARE FOR REFERENCE PURPOSES ONLY. ALL OF THESE SYMBOLS MAY NOT BE USED FOR THIS PROJECT.

LAKE COUNTY BUILDING SERVICES
Any errors or omissions in these plans shall be made to conform with the applicable code requirements per Florida Building Code. In accordance with Section 107, Plans are reviewed for code compliance and shall be kept on job site.

RECEIVED FEB 14 2019

PERMIT REVIEW STAMP

ISSUE HISTORY

No.	Date	Description
1	02/08/2019	ISSUE FOR PERMIT

REVISION HISTORY

No.	Date	Description

© 2015. These documents and their contents are the property of FUGLEBERG KOCH, PLLC - A20002100. and are issued only for the specific project noted on these drawings. Any reproductions, revisions, or modifications of these documents without the expressed written consent of Fugleberg Koch, PLLC is prohibited by law.

FUGLEBERG KOCH
2555 Temple Trail, Winter Park, FL 32789 (407) 629-0595
www.fuglebergkoch.com BR569

CONSULTANT

Joseph, Lawrence & Co
Consulting Engineers
1180 HARWOOD AVE, SUITE 3000
ALTAMONTE SPRINGS, FLORIDA 32714
TEL: 321.972.4466
WWW.JLCENG.COM
CA NO. 28730

JLC 17.0137.00

ADAM JOSEPH BARNEY No. 69124 STATE OF FLORIDA PROFESSIONAL ENGINEER
Adam Joseph Barney
P.E. #:69124

Drawn:	MJR/KCM
Checked:	BLS/AJB
Approval:	BLS/AJB
Date:	02/08/2019
Project #:	5389

SUMMER BAY APTS. II
LAKE COUNTY, FL

SYMBOL LEGEND - MECHANICAL

M0.01

REFERENCE NOTES: (X)

1. ROUTE EXHAUST DUCT FROM WALL MOUNTED EXHAUST FAN THROUGH TRUSS SPACE TO BUILDING SIDEWALL. TERMINATE DUCT AT EXTERIOR WALL CAP WITH BIRD SCREEN PER RISER ON SHEET M7.01. PRIME COAT AND PAINT WALL CAP TO MATCH BUILDING COLOR. SEE INDIVIDUAL UNIT PLANS FOR CONTINUATION.
2. ROUTE DRYER EXHAUST DUCT THROUGH TRUSS SPACE TO BUILDING SIDEWALL. TERMINATE DUCT AT EXTERIOR WALL CAP PER RISER ON SHEET M7.01. PRIME COAT AND PAINT WALL CAP TO MATCH BUILDING COLOR. SEE INDIVIDUAL UNIT PLAN FOR CONTINUATION.
3. ROUTE REFRIGERANT LINES WITHIN MECHANICAL CLOSET WALL UP TO ROOF MOUNTED CONDENSING UNIT. SEE PLUMBING PLANS FOR CONDENSATE LINE ROUTING.
4. PROVIDE HARD WIRED 120V CARBON MONOXIDE MONITOR EQUAL TO FIRST ALERT MODEL CO5120BN. INTERCONNECT TO DWELLING UNIT GARAGE EXHAUST FAN WITH BRK RELAY MODULE PER CARBON MONOXIDE ALARM WITH FAN RELAY DETAIL #8 ON SHEET M6.01. FAN TO ACTIVATE UPON DETECTION OF CARBON MONOXIDE.
5. ROUTE 8"x8" GARAGE EXHAUST THROUGH TRUSS SPACE TO EXTERIOR WALL. PROVIDE WALL CAP PER DETAIL#5 ON SHEET M6.01.
6. LOCATE MAU ABOVE DOOR. ROUTE CONDENSATE FROM MAU THRU WALL TO CONDENSATE RISER. SEE PLUMBING PLANS FOR CONDENSATE LINE ROUTING. ROUTE REFRIGERANT LINES IN WALL AND UP TO CONDENSING UNIT ON ROOF.
7. PROVIDE NEW FULLY DIGITAL 7 DAY PROGRAMMABLE TYPE THERMOSTAT WITH AUTO CHANGE OVER AND AUTO SET BACK. MOUNT THERMOSTAT 48" ABOVE FINISHED FLOOR. PROVIDE WITH CLEAR ACRYLIC LOCKING COVER.
8. ROUTE OUTSIDE AIR DUCT FROM CORRIDOR AIR HANDLER ABOVE CEILING TO BUILDING SIDEWALL. TERMINATE WITH WALL CAP PER DETAIL #5 ON SHEET M6.01. PRIME COAT AND PAINT WALL CAP TO MATCH BUILDING COLOR. PROVIDE MOTORIZED DAMPER IN VERTICAL SECTION OF OUTSIDE AIR DUCT IN MECHANICAL ROOM. OUTSIDE AIR INTAKE TO BE A MINIMUM OF 10'-0" FROM ALL EXHAUST OUTLETS.

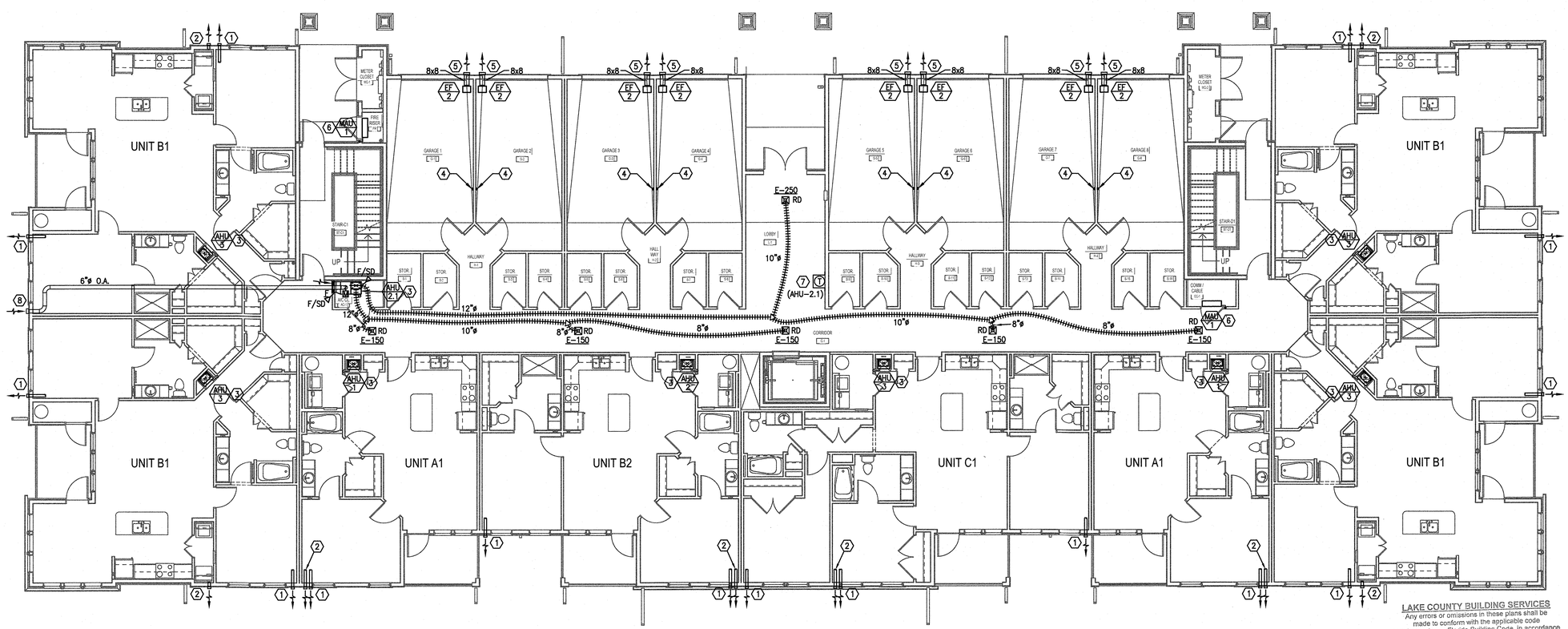

H1 BUILDING TYPE 2 - GROUND LEVEL - MECHANICAL
1/8" = 1'-0"

LAKE COUNTY BUILDING SERVICES
Any errors or omissions in these plans shall be made to conform with the applicable code requirements per Florida Building Code, in accordance with Section 107. Plans were reviewed for code compliance and shall be kept on job site.

RECEIVED FEB 14 2019

PERMIT REVIEW STAMP

ISSUE HISTORY

No.	Date	Description
1	02/08/2019	ISSUE FOR PERMIT

REVISION HISTORY

No.	Date	Description

FUGLEBERG KOCH
2555 Temple Trail, Winter Park, FL 32789 (407) 629-0595
www.fuglebergkoch.com BR569

CONSULTANT
Joseph, Lawrence & Co
Consulting Engineers
1180 HARWOOD AVE. SUITE 3000
ALTAMONTE SPRINGS, FLORIDA 32714
TEL: 321.972.4466
WWW.JLCENG.COM
CA NO. 28730

JLC 17.0137.00

ADAM J BARNEY LICENSE No. 69124 STATE OF FLORIDA PROFESSIONAL ENGINEER

Adam Joseph Barney
P.E. #:69124

SUMMER BAY APTS. II
LAKE COUNTY, FL

Drawn:	MJR/KCM
Checked:	BLS/AJB
Approval:	BLS/AJB
Date:	02/08/2019
Project #:	5389

BUILDING TYPE 2 - GROUND FLOOR PLAN - MECHANICAL

M3.01

© 2015 These documents and their contents are the property of FUGLEBERG KOCH, PLLC - AA26002103, and are issued only for the specific project noted on these drawings. Any reproductions, revisions, or modifications of these documents without the expressed written consent of Fugleberg Koch, PLLC is prohibited by law.

REFERENCE NOTES: (X)

1. ROUTE EXHAUST DUCT FROM WALL MOUNTED EXHAUST FAN THROUGH TRUSS SPACE TO BUILDING SIDEWALL. TERMINATE DUCT AT EXTERIOR WALL CAP WITH BIRD SCREEN PER RISER ON SHEET M7.01. PRIME COAT AND PAINT WALL CAP TO MATCH BUILDING COLOR. SEE INDIVIDUAL UNIT PLANS FOR CONTINUATION.
2. ROUTE DRYER EXHAUST DUCT THROUGH TRUSS SPACE TO BUILDING SIDEWALL. TERMINATE DUCT AT EXTERIOR WALL CAP PER RISER ON SHEET M7.01. PRIME COAT AND PAINT WALL CAP TO MATCH BUILDING COLOR. SEE INDIVIDUAL UNIT PLAN FOR CONTINUATION.
3. ROUTE REFRIGERANT LINES WITHIN MECHANICAL CLOSET WALL UP TO ROOF MOUNTED CONDENSING UNIT. SEE PLUMBING PLANS FOR CONDENSATE LINE ROUTING.
4. ROUTE OUTSIDE AIR DUCT FROM CORRIDOR AIR HANDLER ABOVE CEILING TO BUILDING SIDEWALL. TERMINATE WITH WALL CAP PER DETAIL #5 ON SHEET M6.01. PRIME COAT AND PAINT WALL CAP TO MATCH BUILDING COLOR. PROVIDE MOTORIZED DAMPER IN VERTICAL SECTION OF OUTSIDE AIR DUCT IN MECHANICAL ROOM. OUTSIDE AIR INTAKE TO BE A MINIMUM OF 10'-0" FROM ALL EXHAUST OUTLETS.
5. PROVIDE NEW FULLY DIGITAL 7 DAY PROGRAMMABLE TYPE THERMOSTAT WITH AUTO CHANGE OVER AND AUTO SET BACK. MOUNT THERMOSTAT 48" ABOVE FINISHED FLOOR. PROVIDE WITH CLEAR ACRYLIC LOCKING COVER.

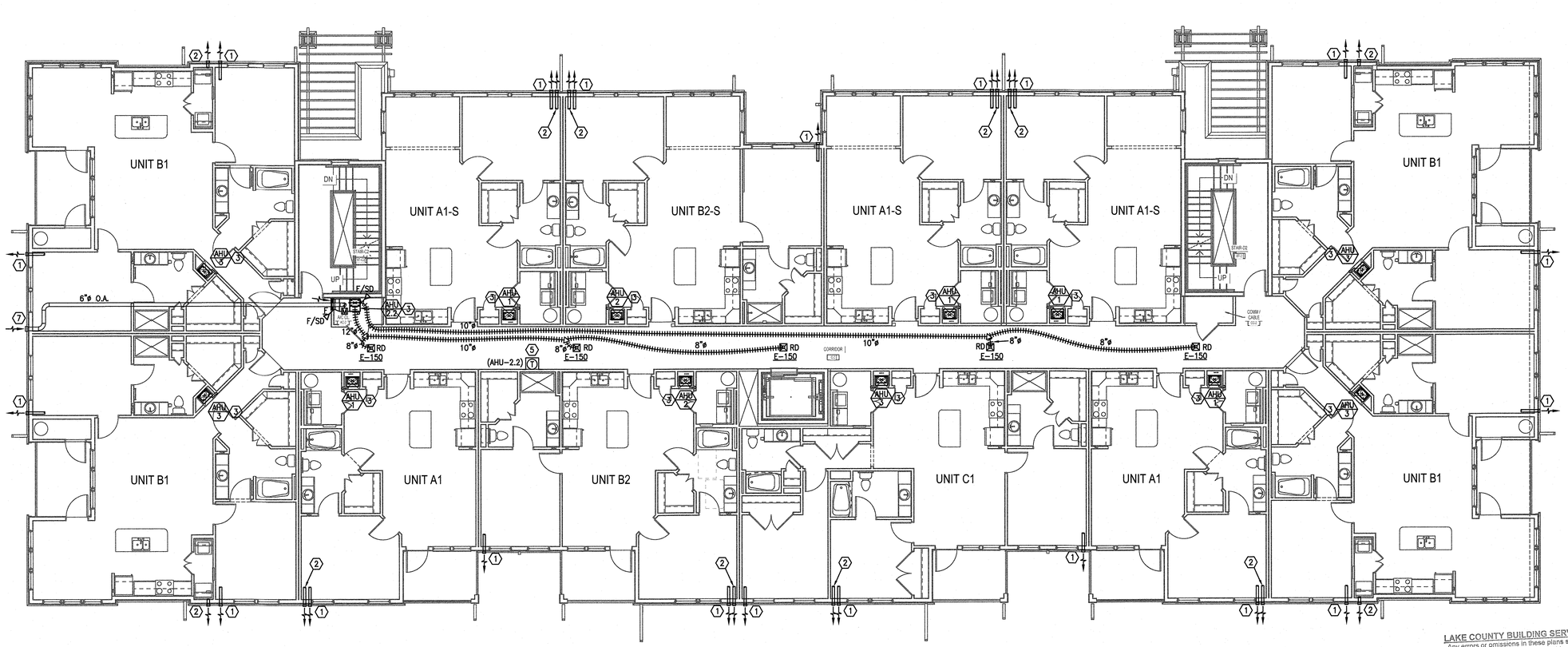

H1 BUILDING TYPE 2 - LEVEL 2 - MECHANICAL
1/8" = 1'-0"

LAKE COUNTY BUILDING SERVICES
Any errors or omissions in these plans shall be made to conform with the applicable code requirements per Florida Building Code, in accordance with Section 107. Plans were reviewed for code compliance and shall be kept on job site.

RECEIVED FEB 14 2019

PERMIT REVIEW STAMP

ISSUE HISTORY

No.	Date	Description
1	02/08/2019	ISSUE FOR PERMIT

REVISION HISTORY

No.	Date	Description

© 2015 These documents and their contents are the property of FUGLEBERG KOCH, PLLC - AA26002103, and are issued only for the specific project noted on these drawings. Any reproductions, revisions, or modifications of these documents without the expressed written consent of Fugleberg Koch, PLLC is prohibited by law.

FUGLEBERG KOCH
2555 Temple Trail, Winter Park, FL 32789 (407) 629-0595
www.fuglebergkoch.com BR569

CONSULTANT
Joseph, Lawrence & Co
Consulting Engineers
1180 HARWOOD AVE. SUITE 3000
ALTAMONTE SPRINGS, FLORIDA 32714
TEL: 321.972.4466
WWW.JLCENG.COM
CA NO. 28730

JLC 17.0137.00

ADAM J BARNEY
LICENSE
No. 69124
STATE OF FLORIDA
PROFESSIONAL ENGINEER

Adam Joseph Barney
P.E. #:69124

SUMMER BAY APTS. II
LAKE COUNTY, FL

Drawn:	MJR/KCM
Checked:	BLS/AJB
Approval:	BLS/AJB
Date:	02/08/2019
Project #:	5389

BUILDING TYPE 2 - LEVEL 2 PLAN - MECHANICAL

M3.02

REFERENCE NOTES: ⓧ

1. ROUTE EXHAUST DUCT FROM WALL MOUNTED EXHAUST FAN THROUGH TRUSS SPACE TO BUILDING SIDEWALL. TERMINATE DUCT AT EXTERIOR WALL CAP WITH BIRD SCREEN PER RISER ON SHEET M7.01. PRIME COAT AND PAINT WALL CAP TO MATCH BUILDING COLOR. SEE INDIVIDUAL UNIT PLANS FOR CONTINUATION.
2. ROUTE DRYER EXHAUST DUCT THROUGH TRUSS SPACE TO BUILDING SIDEWALL. TERMINATE DUCT AT EXTERIOR WALL CAP PER RISER ON SHEET M7.01. PRIME COAT AND PAINT WALL CAP TO MATCH BUILDING COLOR. SEE INDIVIDUAL UNIT PLAN FOR CONTINUATION.
3. ROUTE REFRIGERANT LINES WITHIN MECHANICAL CLOSET WALL UP TO ROOF MOUNTED CONDENSING UNIT. SEE PLUMBING PLANS FOR CONDENSATE LINE ROUTING.
4. ROUTE OUTSIDE AIR DUCT FROM CORRIDOR AIR HANDLER ABOVE CEILING TO BUILDING SIDEWALL. TERMINATE WITH WALL CAP PER DETAIL #5 ON SHEET M6.01. PRIME COAT AND PAINT WALL CAP TO MATCH BUILDING COLOR. PROVIDE MOTORIZED DAMPER IN VERTICAL SECTION OF OUTSIDE AIR DUCT IN MECHANICAL ROOM. OUTSIDE AIR INTAKE TO BE A MINIMUM OF 10'-0" FROM ALL EXHAUST OUTLETS.
5. PROVIDE NEW FULLY DIGITAL 7 DAY PROGRAMMABLE TYPE THERMOSTAT WITH AUTO CHANGE OVER AND AUTO SET BACK. MOUNT THERMOSTAT 48" ABOVE FINISHED FLOOR. PROVIDE WITH CLEAR ACRYLIC LOCKING COVER.

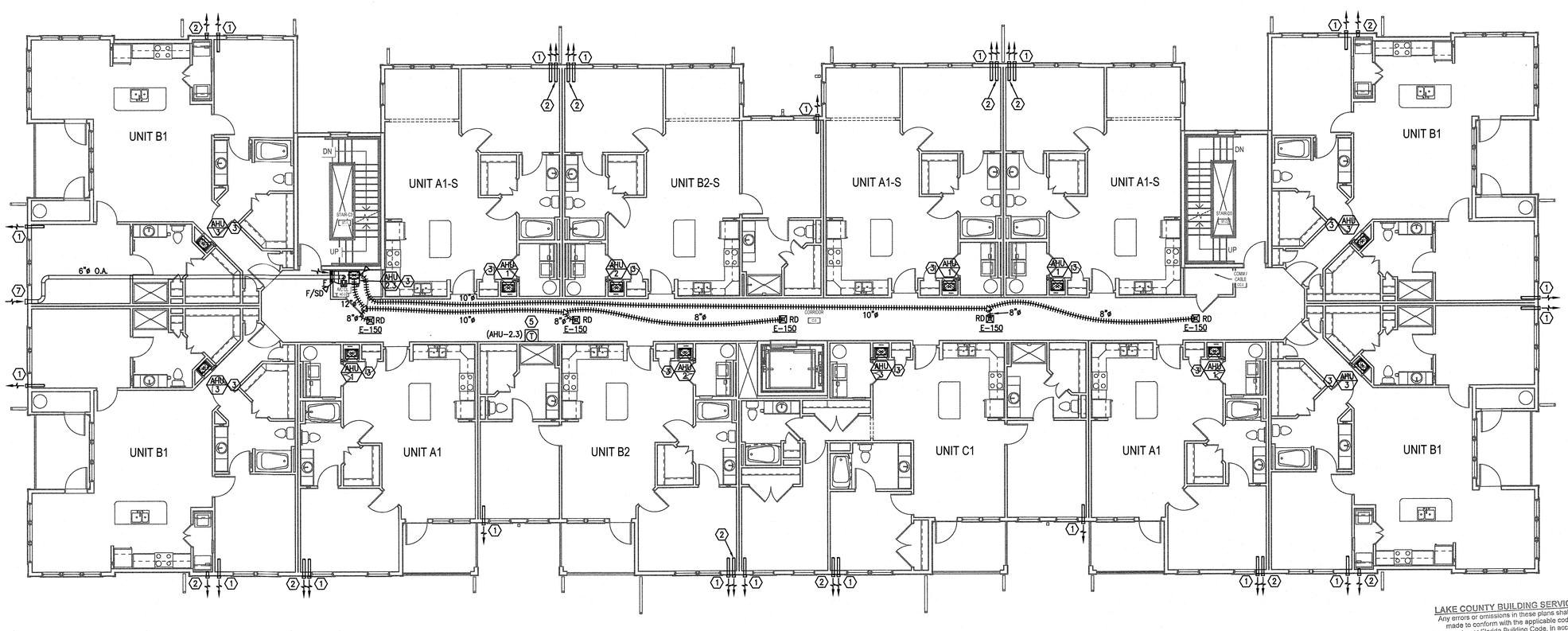

H1 BUILDING TYPE 2 - LEVEL 3 - MECHANICAL
1/8" = 1'-0"

LAKE COUNTY BUILDING SERVICES
Any errors or omissions in these plans shall be made to conform with the applicable code requirements per Florida Building Code, in accordance with Section 107. Plans were reviewed for code compliance and shall be kept on job site.

RECEIVED FEB 14 2019

PERMIT REVIEW STAMP

ISSUE HISTORY

No.	Date	Description
1	02/08/2019	ISSUE FOR PERMIT

REVISION HISTORY

No.	Date	Description

FUGLEBERG KOCH
2555 Temple Trail, Winter Park, FL 32789 (407) 629-0595
www.fuglebergkoch.com BR569

CONSULTANT
Joseph, Lawrence & Co
Consulting Engineers
1180 HARWOOD AVE. SUITE 3000
ALTAMONTE SPRINGS, FLORIDA 32714
TEL: 321.972.4466
WWW.JLCENG.COM
CA NO. 28730

JLC 17.0137.00

ADAM J BARNEY
LICENSE
No. 69124
STATE OF FLORIDA
PROFESSIONAL ENGINEER

Adam Joseph Barney
P.E. #:69124

SUMMER BAY APTS. II
LAKE COUNTY, FL

Drawn:	MJR/KCM
Checked:	BLS/AJB
Approval:	BLS/AJB
Date:	02/08/2019
Project #:	5389

BUILDING TYPE 2 - LEVEL 3
PLAN - MECHANICAL

M3.03

© 2015 These documents and their contents are the property of FUGLEBERG KOCH, PLLC - AA26002103, and are issued only for the specific project noted on these drawings. Any reproductions, revisions, or modifications of these documents without the expressed written consent of Fugleberg Koch, PLLC is prohibited by law.

REFERENCE NOTES: (X)

1. ROUTE EXHAUST DUCT FROM WALL MOUNTED EXHAUST FAN THROUGH TRUSS SPACE TO BUILDING SIDEWALL. TERMINATE DUCT AT EXTERIOR WALL CAP WITH BIRD SCREEN PER RISER ON SHEET M7.01. PRIME COAT AND PAINT WALL CAP TO MATCH BUILDING COLOR. SEE INDIVIDUAL UNIT PLANS FOR CONTINUATION.
2. ROUTE DRYER EXHAUST DUCT THROUGH TRUSS SPACE TO BUILDING SIDEWALL. TERMINATE DUCT AT EXTERIOR WALL CAP PER RISER ON SHEET M7.01. PRIME COAT AND PAINT WALL CAP TO MATCH BUILDING COLOR. SEE INDIVIDUAL UNIT PLAN FOR CONTINUATION.
3. ROUTE REFRIGERANT LINES WITHIN MECHANICAL CLOSET WALL UP TO ROOF MOUNTED CONDENSING UNIT. SEE PLUMBING PLANS FOR CONDENSATE LINE ROUTING.
4. ROUTE OUTSIDE AIR DUCT FROM CORRIDOR AIR HANDLER ABOVE CEILING TO BUILDING SIDEWALL. TERMINATE WITH WALL CAP PER DETAIL #5 ON SHEET M6.01. PRIME COAT AND PAINT WALL CAP TO MATCH BUILDING COLOR. PROVIDE MOTORIZED DAMPER IN VERTICAL SECTION OF OUTSIDE AIR DUCT IN MECHANICAL ROOM. OUTSIDE AIR INTAKE TO BE A MINIMUM OF 10'-0" FROM ALL EXHAUST OUTLETS.
5. PROVIDE NEW FULLY DIGITAL 7 DAY PROGRAMMABLE TYPE THERMOSTAT WITH AUTO CHANGE OVER AND AUTO SET BACK. MOUNT THERMOSTAT 48" ABOVE FINISHED FLOOR. PROVIDE WITH CLEAR ACRYLIC LOCKING COVER.

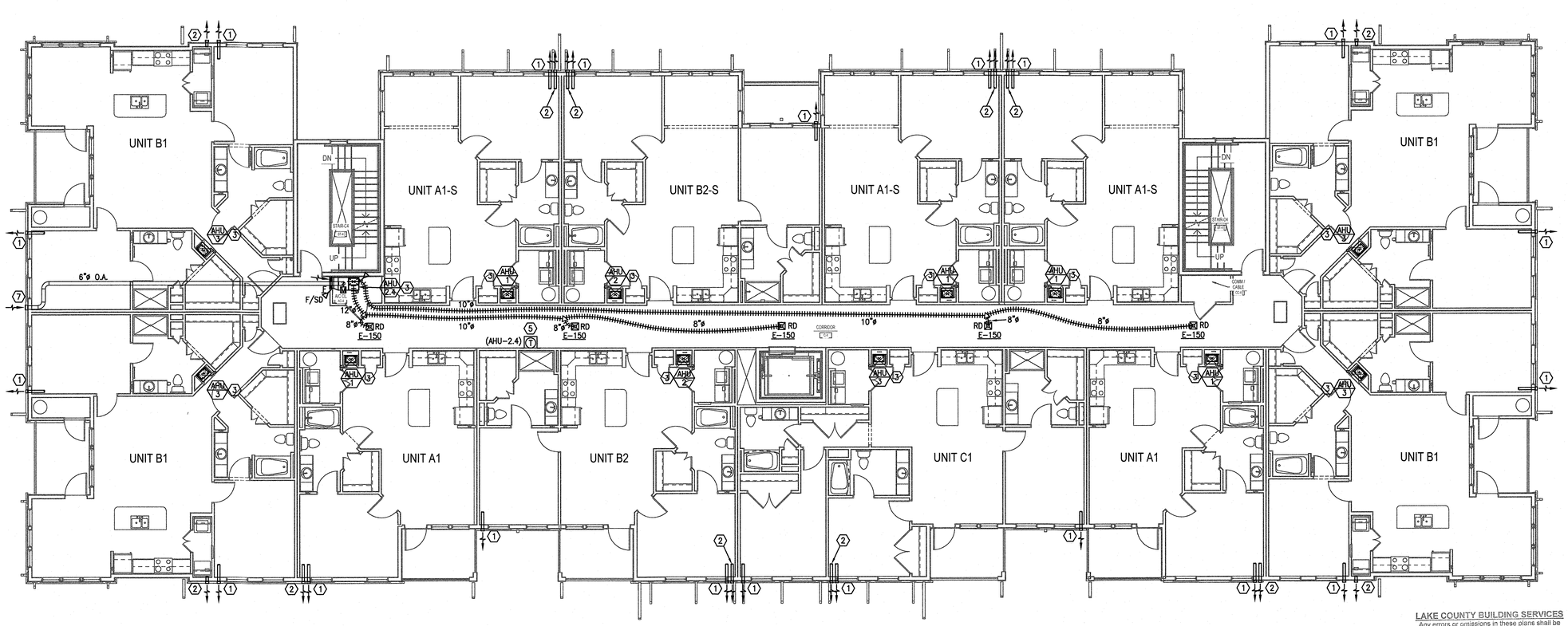

H1 BUILDING TYPE 2 - LEVEL 4 - MECHANICAL
1/8" = 1'-0"

LAKE COUNTY BUILDING SERVICES
Any errors or omissions in these plans shall be made to conform with the applicable code requirements per Florida Building Code, in accordance with Section 107. Plans were reviewed for code compliance and shall be kept on job site.

RECEIVED FEB 14 2019

PERMIT REVIEW STAMP

ISSUE HISTORY

No.	Date	Description
1	02/08/2019	ISSUE FOR PERMIT

REVISION HISTORY

No.	Date	Description

FUGLEBERG KOCH
2555 Temple Trail, Winter Park, FL 32789 (407) 629-0595
www.fuglebergkoch.com BR569

CONSULTANT
Joseph, Lawrence & Co
Consulting Engineers
1180 HARWOOD AVE. SUITE 3000
ALTAMONTE SPRINGS, FLORIDA 32714
TEL: 321.972.4466
WWW.JLCENG.COM
CA NO. 28730

JLC 17.0137.00

ADAM J BARNEY LICENSE No. 69124 STATE OF FLORIDA PROFESSIONAL ENGINEER

Adam Joseph Barney
P.E. #:69124

SUMMER BAY APTS. II
LAKE COUNTY, FL

Drawn:	MJR/KCM
Checked:	BLS/AJB
Approval:	BLS/AJB
Date:	02/08/2019
Project #:	5389

BUILDING TYPE 2 - LEVEL 4 PLAN - MECHANICAL

M3.04

© 2015 These documents and their contents are the property of FUGLEBERG KOCH, PLLC - AA26002103, and are issued only for the specific project noted on these drawings. Any reproductions, revisions, or modifications of these documents without the expressed written consent of Fugleberg Koch, PLLC is prohibited by law.

REFERENCE NOTES: (X)

1. MOUNT NEW CONDENSING UNITS TO NEW ROOF MOUNTED RAIL SYSTEM. REFER TO DETAIL #2 ON SHEET M6.03.
2. ROUTE REFRIGERANT LINES ABOVE ROOF AND THROUGH BUILDING SIDEWALL INTO TRUSS SPACE. REFER TO DETAIL #4 ON SHEET M6.03.
3. SUPPORT REFRIGERANT PIPING ABOVE ROOF SURFACE PER ROOF SUPPORT DETAIL #3 ON SHEET M6.03.

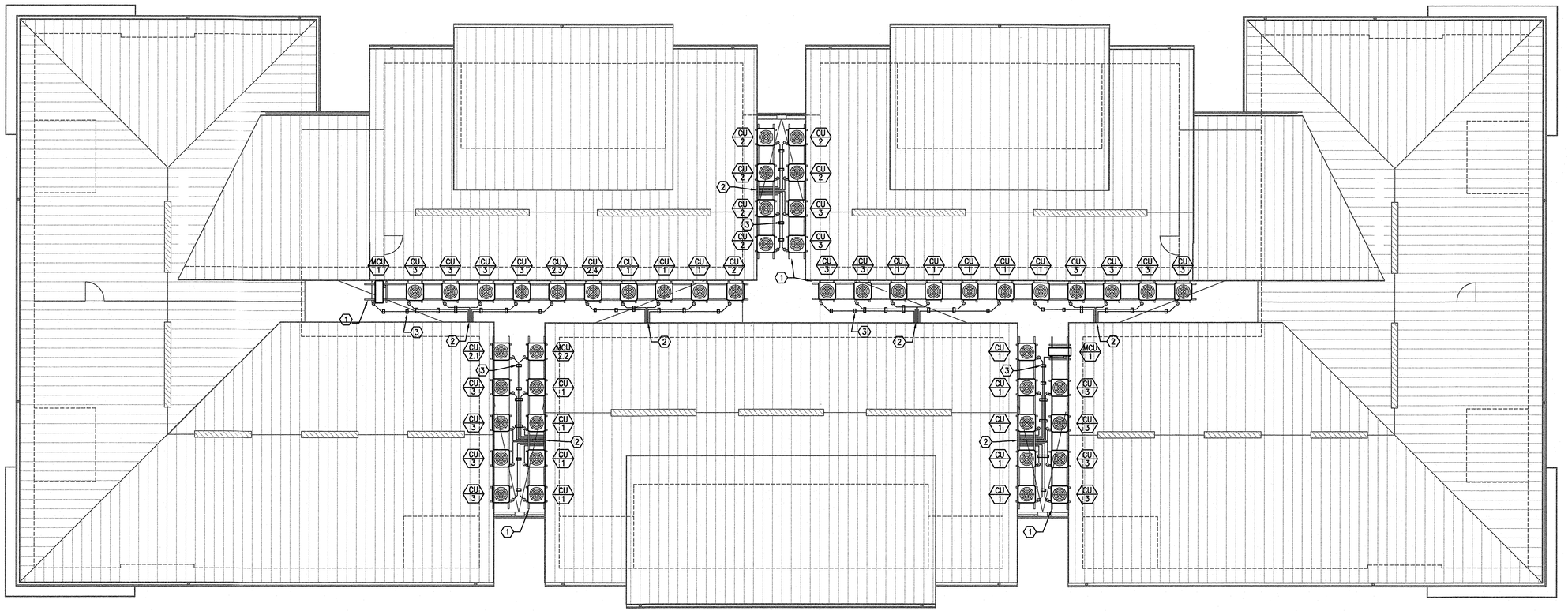

H1 BUILDING TYPE 2 - ROOF - MECHANICAL
1/8" = 1'-0"

LAKE COUNTY BUILDING SERVICES
Any errors or omissions in these plans shall be made to conform with the applicable code requirements per Florida Building Code, in accordance with Section 107. Plans were reviewed for code compliance and shall be kept on job site.

RECEIVED FEB 14 2019

PERMIT REVIEW STAMP

ISSUE HISTORY

No.	Date	Description
1	02/08/2019	ISSUE FOR PERMIT

REVISION HISTORY

No.	Date	Description

FUGLEBERG KOCH
2555 Temple Trail, Winter Park, FL 32789 (407) 629-0595
www.fuglebergkoch.com BR569

CONSULTANT
Joseph, Lawrence & Co
Consulting Engineers
1180 HARWOOD AVE. SUITE 3000
ALTAMONTE SPRINGS, FLORIDA 32714
TEL: 321.972.4466
WWW.JLCENG.COM
CA NO. 28730

JLC 17.0137.00

ADAM J BARNEY
LICENSE
No. 69124
STATE OF FLORIDA
PROFESSIONAL ENGINEER

Adam Joseph Barney
P.E. #:69124

SUMMER BAY APTS. II
LAKE COUNTY, FL

Drawn:	MJR/KCM
Checked:	BLS/AJB
Approval:	BLS/AJB
Date:	02/08/2019
Project #:	5389

BUILDING TYPE 2 - ROOF - MECHANICAL

M3.05

© 2015 These documents and their contents are the property of FUGLEBERG KOCH, PLLC - AA26002103, and are issued only for the specific project noted on these drawings. Any reproductions, revisions, or modifications of these documents without the expressed written consent of Fugleberg Koch, PLLC is prohibited by law.

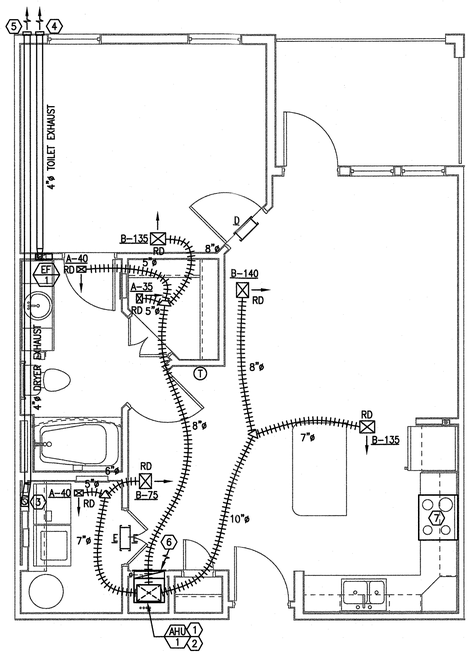

D1 ENLARGED TYPICAL UNIT TYPE 'A1' - MECHANICAL
1/4" = 1'-0"

NATURAL VENTILATION CALC. UNIT A1	
UNIT FLOOR AREA:	732
MIN. VENTILATION AREA: (UNIT AREA * 4%)	29.2
ACTUAL VENTILATION AREA: (OPERABLE OPENING AREA)	69.5

NATURAL VENTILATION CALCULATIONS BASED ON FLORIDA MECHANICAL CODE CHAPTER 4, SECTION 402.

ALL AREAS CALCULATED IN SQUARE FEET

DRYER VENT LENGTH CALC. UNIT A1	
HORIZONTAL LENGTH:	24
VERTICAL LENGTH:	7
90° (5 FT EACH):	5
45° (2.5 FT EACH):	0
TOTAL EQ. LENGTH (FT):	36

THIS DRYER VENT TOTAL EQUIVALENT LENGTH EXCEEDS THE CODE MAXIMUM OF 35 FEET, ANY CLOTHES DRYER CONNECTED TO THE DRYER EXHAUST SYSTEM IS REQUIRED TO HAVE A MANUFACTURERS SERVICE RATING THAT MEETS OR EXCEEDS THE OVERALL DRYER VENT LENGTH OF THIS SYSTEM AS CALCULATED PER THE DRYER MANUFACTURER REQUIREMENTS.

MECHANICAL CONTRACTOR TO PROVIDE PERMANENTLY AFFIXED LABEL IDENTIFYING THE TOTAL EQUIVALENT LENGTH OF THE UNIT DRYER EXHAUST SYSTEM AS LISTED ABOVE WITHIN 6 FEET OF THE DRYER EXHAUST DUCTWORK CONNECTION STATING "THIS DRYER VENT IS 36' LONG AND REQUIRES A DRYER CAPABLE OF MEETING THIS DRYER VENT LENGTH".

NATURAL VENTILATION CALC. UNIT A1S	
UNIT FLOOR AREA:	810
MIN. VENTILATION AREA: (UNIT AREA * 4%)	32.4
ACTUAL VENTILATION AREA: (OPERABLE OPENING AREA)	54.7

NATURAL VENTILATION CALCULATIONS BASED ON FLORIDA MECHANICAL CODE CHAPTER 4, SECTION 402.

ALL AREAS CALCULATED IN SQUARE FEET

DRYER VENT LENGTH CALC. UNIT A1S	
HORIZONTAL LENGTH:	24
VERTICAL LENGTH:	7
90° (5 FT EACH):	5
45° (2.5 FT EACH):	0
TOTAL EQ. LENGTH (FT):	36

THIS DRYER VENT TOTAL EQUIVALENT LENGTH EXCEEDS THE CODE MAXIMUM OF 35 FEET, ANY CLOTHES DRYER CONNECTED TO THE DRYER EXHAUST SYSTEM IS REQUIRED TO HAVE A MANUFACTURERS SERVICE RATING THAT MEETS OR EXCEEDS THE OVERALL DRYER VENT LENGTH OF THIS SYSTEM AS CALCULATED PER THE DRYER MANUFACTURER REQUIREMENTS.

MECHANICAL CONTRACTOR TO PROVIDE PERMANENTLY AFFIXED LABEL IDENTIFYING THE TOTAL EQUIVALENT LENGTH OF THE UNIT DRYER EXHAUST SYSTEM AS LISTED ABOVE WITHIN 6 FEET OF THE DRYER EXHAUST DUCTWORK CONNECTION STATING "THIS DRYER VENT IS 36' LONG AND REQUIRES A DRYER CAPABLE OF MEETING THIS DRYER VENT LENGTH".

NATURAL VENTILATION CALC. UNIT S1	
UNIT FLOOR AREA:	614
MIN. VENTILATION AREA: (UNIT AREA * 4%)	24.5
ACTUAL VENTILATION AREA: (OPERABLE OPENING AREA)	51.0

NATURAL VENTILATION CALCULATIONS BASED ON FLORIDA MECHANICAL CODE CHAPTER 4, SECTION 402.

ALL AREAS CALCULATED IN SQUARE FEET

DRYER VENT LENGTH CALC. UNIT S1	
HORIZONTAL LENGTH:	14.5
VERTICAL LENGTH:	7
90° (5 FT EACH):	5
45° (2.5 FT EACH):	5
TOTAL EQ. LENGTH (FT):	31.5

THIS DRYER VENT SYSTEM IS LESS THAN THE CODE MAXIMUM LENGTH OF 35 FEET. A STANDARD SERVICE RATED DRYER MAY BE INSTALLED.

REFERENCE NOTES:

1. MOUNT AHU PER CLOSET MOUNTED AHU DETAIL #1 ON SHEET M6.02.
2. ROUTE REFRIGERANT LINES UP TO CONDENSING UNITS ON ROOF. ROUTE CONDENSATE DRAIN LINES WITHIN MECHANICAL CLOSET WALL. SEE PLUMBING PLANS FOR CONDENSATE LINE CONTINUATION. ROUTE REFRIGERANT LINES PER DIAGRAM M7.01.
3. INSTALL DRYER EXHAUST WALL CONNECTION BOX PER DETAIL #2 ON SHEET M6.01.
4. ROUTE EXHAUST DUCT FROM WALL MOUNTED EXHAUST FAN THROUGH TRUSS SPACE TO BUILDING SIDEWALL PER DETAIL #5 ON SHEET M6.01. TERMINATE DUCT AT EXTERIOR WALL CAP PER DIAGRAM SHEET M7.01.
5. ROUTE DRYER EXHAUST DUCT THROUGH TRUSS SPACE TO BUILDING SIDEWALL PER DETAIL #5 SHEET M6.01 TERMINATE DUCT AT EXTERIOR WALL CAP PER DIAGRAM SHEET M7.01.
6. PROVIDE FACTORY WALL PANEL FOR RETURN AIR AND ACCESS.
7. DUCTLESS RANGE HOOD.

GENERAL NOTES:

1. PROVIDE 1" DOOR UNDER CUT IN ALL BEDROOMS IN ADDITION TO TRANSFER GRILLE.
2. ALL EXHAUST OUTLETS TO BE FARTHER THAN 3 FEET AWAY FROM ANY OPERABLE WINDOWS.

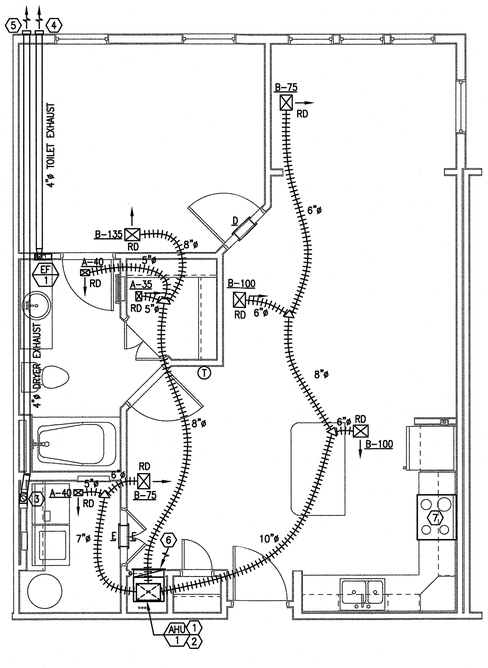

H1 ENLARGED TYPICAL UNIT TYPE 'A1S' - MECHANICAL
1/4" = 1'-0"

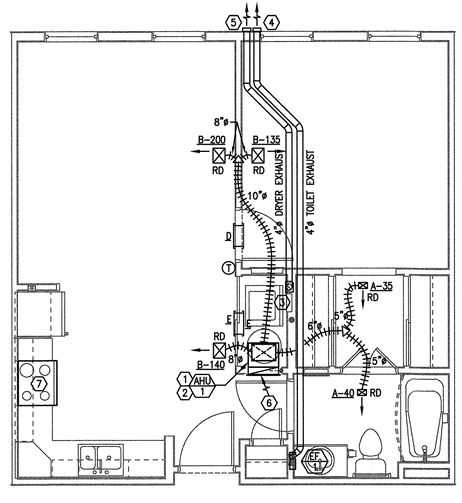

H5 ENLARGED TYPICAL UNIT TYPE 'S1' - MECHANICAL
1/4" = 1'-0"

LAKE COUNTY BUILDING SERVICES
Any errors or omissions in these plans shall be made to conform with the applicable code requirements per Florida Building Code, in accordance with Section 107. Plans were reviewed for code compliance and shall be kept on job site.

RECEIVED FEB 14 2019

RECEIVED FEB 14 2019

PERMIT REVIEW STAMP

ISSUE HISTORY

No.	Date	Description
1	02/08/2019	ISSUE FOR PERMIT

REVISION HISTORY

No.	Date	Description

FUGLEBERG KOCH
2555 Temple Trail, Winter Park, FL 32789 (407) 629-0595
www.fuglebergkoch.com BR569

CONSULTANT
Joseph, Lawrence & Co Consulting Engineers
1180 HARWOOD AVE. SUITE 3000
ALTAMONTE SPRINGS, FLORIDA 32714
TEL. 321.972.4466
WWW.JLCENG.COM
CA NO. 28730

JLC 17.0137.00

ADAM J BARNEY LICENSE No. 69124 STATE OF FLORIDA PROFESSIONAL ENGINEER

Adam Joseph Barney
P.E. #:69124

SUMMER BAY APTS. II LAKE COUNTY, FL	Drawn: MJR/KCM Checked: BLS/AJB Approval: BLS/AJB Date: 02/08/2019 Project #: 5389
ENLARGED TYPICAL UNIT PLANS - MECHANICAL	
M4.01	

© 2019 These documents are the property of FUGLEBERG KOCH, PLLC. Copyright of FUGLEBERG KOCH, PLLC. ALL RIGHTS RESERVED. All are prepared only for the specific project and/or time shown. Any reproductions, revisions, or modifications of these documents without the expressed written consent of Fugleberg Koch, PLLC is prohibited by law.

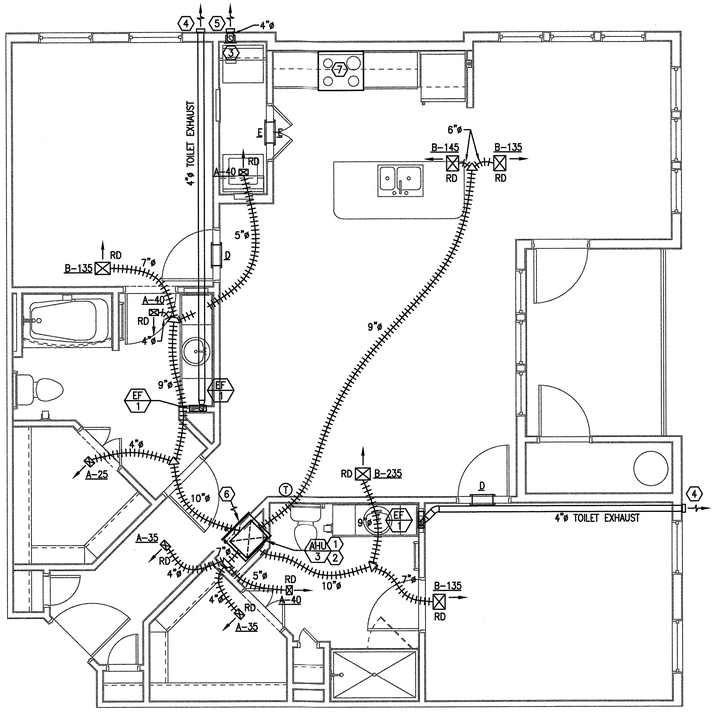

D1 ENLARGED TYPICAL UNIT TYPE 'B1' - MECHANICAL

1/4" = 1'-0"

NATURAL VENTILATION CALC. UNIT B1	
UNIT FLOOR AREA:	1,326
MIN. VENTILATION AREA: (UNIT AREA * 4%)	53.0
ACTUAL VENTILATION AREA: (OPERABLE OPENING AREA)	107.2

NATURAL VENTILATION CALCULATIONS BASED ON FLORIDA MECHANICAL CODE CHAPTER 4, SECTION 402.

ALL AREAS CALCULATED IN SQUARE FEET

DRYER VENT LENGTH CALC. UNIT A1	
HORIZONTAL LENGTH:	24
VERTICAL LENGTH:	7
90° (5 FT EACH):	5
45° (2.5 FT EACH):	0
TOTAL EQ. LENGTH (FT):	36

THIS DRYER VENT TOTAL EQUIVALENT LENGTH EXCEEDS THE CODE MAXIMUM OF 35 FEET, ANY CLOTHES DRYER CONNECTED TO THE DRYER EXHAUST SYSTEM IS REQUIRED TO HAVE A MANUFACTURERS SERVICE RATING THAT MEETS OR EXCEEDS THE OVERALL DRYER VENT LENGTH OF THIS SYSTEM AS CALCULATED PER THE DRYER MANUFACTURER REQUIREMENTS.

MECHANICAL CONTRACTOR TO PROVIDE PERMANENTLY AFFIXED LABEL IDENTIFYING THE TOTAL EQUIVALENT LENGTH OF THE UNIT DRYER EXHAUST SYSTEM AS LISTED ABOVE WITHIN 6 FEET OF THE DRYER EXHAUST DUCTWORK CONNECTION STATING "THIS DRYER VENT IS 36' LONG AND REQUIRES A DRYER CAPABLE OF MEETING THIS DRYER VENT LENGTH".

NATURAL VENTILATION CALC. UNIT B2S	
UNIT FLOOR AREA:	1,095
MIN. VENTILATION AREA: (UNIT AREA * 4%)	43.8
ACTUAL VENTILATION AREA: (OPERABLE OPENING AREA)	63.5

NATURAL VENTILATION CALCULATIONS BASED ON FLORIDA MECHANICAL CODE CHAPTER 4, SECTION 402.

ALL AREAS CALCULATED IN SQUARE FEET

DRYER VENT LENGTH CALC. UNIT A1S	
HORIZONTAL LENGTH:	24
VERTICAL LENGTH:	7
90° (5 FT EACH):	5
45° (2.5 FT EACH):	0
TOTAL EQ. LENGTH (FT):	36

THIS DRYER VENT TOTAL EQUIVALENT LENGTH EXCEEDS THE CODE MAXIMUM OF 35 FEET, ANY CLOTHES DRYER CONNECTED TO THE DRYER EXHAUST SYSTEM IS REQUIRED TO HAVE A MANUFACTURERS SERVICE RATING THAT MEETS OR EXCEEDS THE OVERALL DRYER VENT LENGTH OF THIS SYSTEM AS CALCULATED PER THE DRYER MANUFACTURER REQUIREMENTS.

MECHANICAL CONTRACTOR TO PROVIDE PERMANENTLY AFFIXED LABEL IDENTIFYING THE TOTAL EQUIVALENT LENGTH OF THE UNIT DRYER EXHAUST SYSTEM AS LISTED ABOVE WITHIN 6 FEET OF THE DRYER EXHAUST DUCTWORK CONNECTION STATING "THIS DRYER VENT IS 36' LONG AND REQUIRES A DRYER CAPABLE OF MEETING THIS DRYER VENT LENGTH".

NATURAL VENTILATION CALC. UNIT B2	
UNIT FLOOR AREA:	1,017
MIN. VENTILATION AREA: (UNIT AREA * 4%)	40.6
ACTUAL VENTILATION AREA: (OPERABLE OPENING AREA)	84.5

NATURAL VENTILATION CALCULATIONS BASED ON FLORIDA MECHANICAL CODE CHAPTER 4, SECTION 402.

ALL AREAS CALCULATED IN SQUARE FEET

DRYER VENT LENGTH CALC. UNIT S1	
HORIZONTAL LENGTH:	20
VERTICAL LENGTH:	7
90° (5 FT EACH):	10
45° (2.5 FT EACH):	0
TOTAL EQ. LENGTH (FT):	37

THIS DRYER VENT TOTAL EQUIVALENT LENGTH EXCEEDS THE CODE MAXIMUM OF 35 FEET, ANY CLOTHES DRYER CONNECTED TO THE DRYER EXHAUST SYSTEM IS REQUIRED TO HAVE A MANUFACTURERS SERVICE RATING THAT MEETS OR EXCEEDS THE OVERALL DRYER VENT LENGTH OF THIS SYSTEM AS CALCULATED PER THE DRYER MANUFACTURER REQUIREMENTS.

MECHANICAL CONTRACTOR TO PROVIDE PERMANENTLY AFFIXED LABEL IDENTIFYING THE TOTAL EQUIVALENT LENGTH OF THE UNIT DRYER EXHAUST SYSTEM AS LISTED ABOVE WITHIN 6 FEET OF THE DRYER EXHAUST DUCTWORK CONNECTION STATING "THIS DRYER VENT IS 37' LONG AND REQUIRES A DRYER CAPABLE OF MEETING THIS DRYER VENT LENGTH".

REFERENCE NOTES: (X)

1. MOUNT AHU PER CLOSET MOUNTED AHU DETAIL #1 ON SHEET M6.02.
2. ROUTE REFRIGERANT LINES UP TO CONDENSING UNITS ON ROOF. ROUTE CONDENSATE DRAIN LINES WITHIN MECHANICAL CLOSET WALL. SEE PLUMBING PLANS FOR CONDENSATE LINE CONTINUATION. ROUTE REFRIGERANT LINES PER DIAGRAM M7.01.
3. INSTALL DRYER EXHAUST WALL CONNECTION BOX PER DETAIL #2 ON SHEET M6.01.
4. ROUTE EXHAUST DUCT FROM WALL MOUNTED EXHAUST FAN THROUGH TRUSS SPACE TO BUILDING SIDEWALL PER DETAIL #5 ON SHEET M6.01. TERMINATE DUCT AT EXTERIOR WALL CAP PER DIAGRAM SHEET M7.01.
5. ROUTE DRYER EXHAUST DUCT THROUGH TRUSS SPACE TO BUILDING SIDEWALL PER DETAIL #5 SHEET M6.01 TERMINATE DUCT AT EXTERIOR WALL CAP PER DIAGRAM SHEET M7.01.
6. PROVIDE FACTORY WALL PANEL FOR RETURN AIR AND ACCESS.
7. DUCTLESS RANGE HOOD.

GENERAL NOTES:

1. PROVIDE 1" DOOR UNDER CUT IN ALL BEDROOMS IN ADDITION TO TRANSFER GRILLE.
2. ALL EXHAUST OUTLETS TO BE FARTHER THAN 3 FEET AWAY FROM ANY OPERABLE WINDOWS.

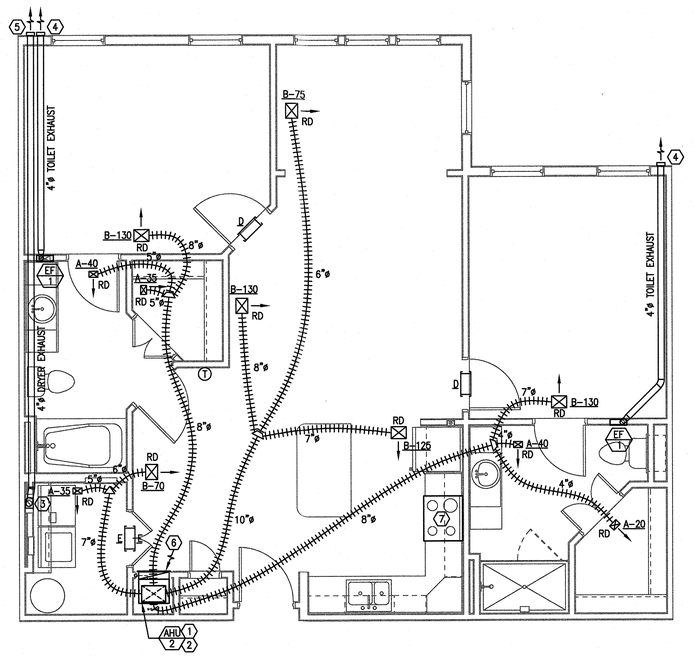

H1 ENLARGED TYPICAL UNIT TYPE 'B2S' - MECHANICAL

1/4" = 1'-0"

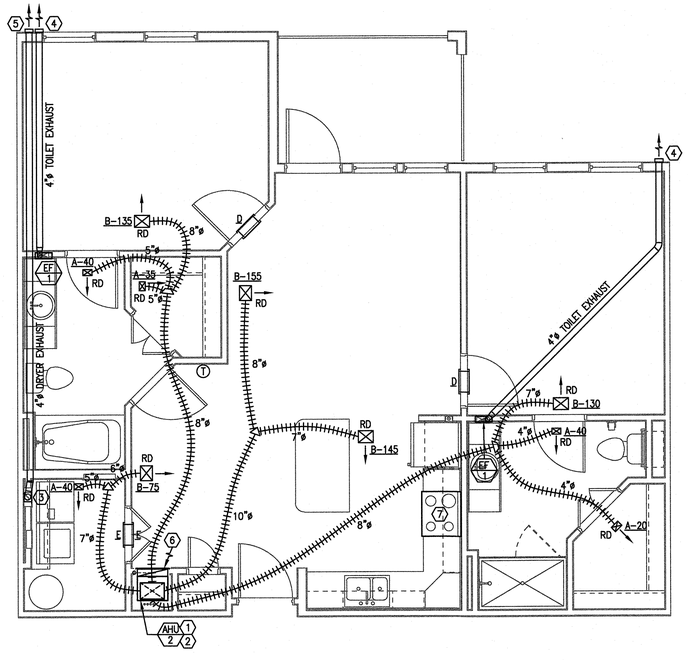

H5 ENLARGED TYPICAL UNIT TYPE 'B2' - MECHANICAL

1/4" = 1'-0"

LAKE COUNTY BUILDING SERVICES

Any errors or omissions in these plans shall be made to conform with the applicable code requirements per Florida Building Code, in accordance with Section 107. Plans were reviewed for code compliance and shall be kept on job site.

RECEIVED FEB 14 2019

PERMIT REVIEW STAMP

ISSUE HISTORY

No.	Date	Description
1	02/08/2019	ISSUE FOR PERMIT

REVISION HISTORY

No.	Date	Description
3	10/05/2018	VALUE ENGINEERING MODS #1

© 2015 These documents are the property of FUGLEBERG KOCH, PLLC. AA0002436. and are issued only for the specific project noted on these drawings. Any reproductions, revisions, or modifications of these documents without the expressed written consent of Fugleberg Koch, PLLC is prohibited by law.

FUGLEBERG KOCH
2555 Temple Trail, Winter Park, FL 32789 (407) 629-0595
www.fuglebergkoch.com BR569

CONSULTANT
Joseph, Lawrence & Co Consulting Engineers
1180 HARWOOD AVE. SUITE 3000
ALTAMONTE SPRINGS, FLORIDA 32714
TEL: 321.972.4466
WWW.JLCENG.COM
CA NO. 28730

JLC 17.0197.00

ADAM J BARNEY LICENSE No. 69124 STATE OF FLORIDA PROFESSIONAL ENGINEER

Adam Joseph Barney
P.E. #:69124

Drawn:	MJR/KCM
Checked:	BLS/AJB
Approval:	BLS/AJB
Date:	02/08/2019
Project #:	5389

SUMMER BAY APTS. II
LAKE COUNTY, FL

ENLARGED TYPICAL UNIT PLANS - MECHANICAL

M4.02

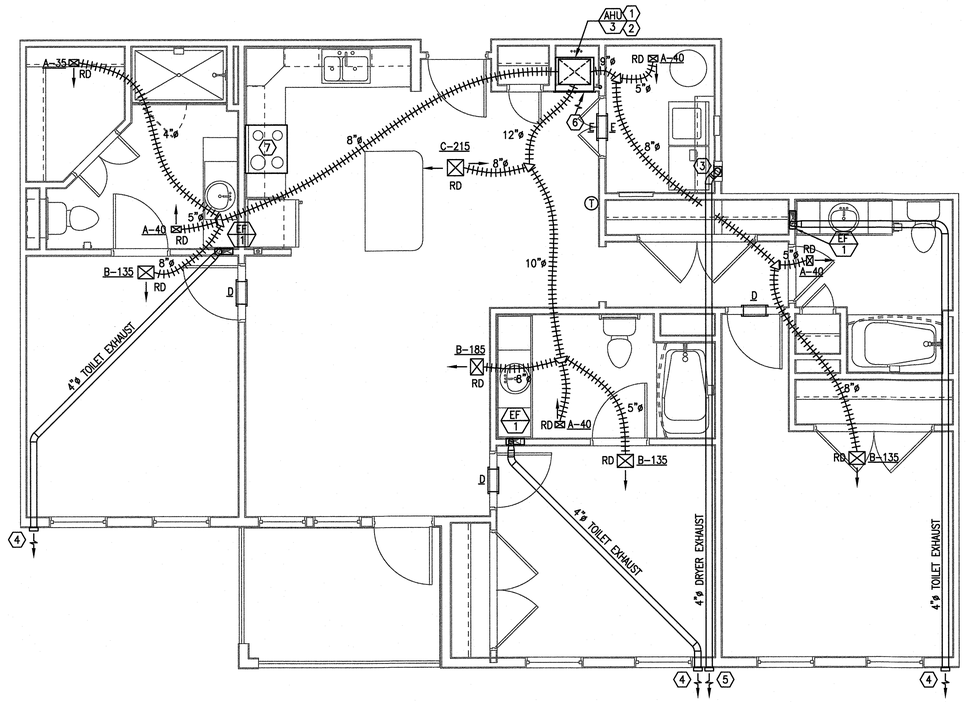

F4 ENLARGED TYPICAL UNIT TYPE 'C1' - MECHANICAL

1/4" = 1'-0"

REFERENCE NOTES: ⟨X⟩

1. MOUNT AHU PER CLOSET MOUNTED AHU DETAIL #1 ON SHEET M6.02.
2. ROUTE REFRIGERANT LINES UP TO CONDENSING UNITS ON ROOF. ROUTE CONDENSATE DRAIN LINES WITHIN MECHANICAL CLOSET WALL. SEE PLUMBING PLANS FOR CONDENSATE LINE CONTINUATION. ROUTE REFRIGERANT LINES PER DIAGRAM M7.01.
3. INSTALL DRYER EXHAUST WALL CONNECTION BOX PER DETAIL #2 ON SHEET M6.01.
4. ROUTE EXHAUST DUCT FROM WALL MOUNTED EXHAUST FAN THROUGH TRUSS SPACE TO BUILDING SIDEWALL PER DETAIL #5 ON SHEET M6.01. TERMINATE DUCT AT EXTERIOR WALL CAP PER DIAGRAM SHEET M7.01.
5. ROUTE DRYER EXHAUST DUCT THROUGH TRUSS SPACE TO BUILDING SIDEWALL PER DETAIL #5 SHEET M6.01 TERMINATE DUCT AT EXTERIOR WALL CAP PER DIAGRAM SHEET M7.01.
6. PROVIDE FACTORY WALL PANEL FOR RETURN AIR AND ACCESS.
7. DUCTLESS RANGE HOOD.

GENERAL NOTES:

1. PROVIDE 1" DOOR UNDER CUT IN ALL BEDROOMS IN ADDITION TO TRANSFER GRILLE.
2. ALL EXHAUST OUTLETS TO BE FARTHER THAN 3 FEET AWAY FROM ANY OPERABLE WINDOWS.

NATURAL VENTILATION CALC.

UNIT C1

UNIT FLOOR AREA:	1,320
MIN. VENTILATION AREA: (UNIT AREA * 4%)	52.8
ACTUAL VENTILATION AREA: (OPERABLE OPENING AREA)	99.5

NATURAL VENTILATION CALCULATIONS BASED ON FLORIDA MECHANICAL CODE CHAPTER 4, SECTION 402.

ALL AREAS CALCULATED IN SQUARE FEET

DRYER VENT LENGTH CALC.

UNIT C1

HORIZONTAL LENGTH:	24
VERTICAL LENGTH:	7
90° (5 FT EACH):	5
45° (2.5 FT EACH):	0
TOTAL EQ. LENGTH (FT):	36

THIS DRYER VENT TOTAL EQUIVALENT LENGTH EXCEEDS THE CODE MAXIMUM OF 35 FEET, ANY CLOTHES DRYER CONNECTED TO THE DRYER EXHAUST SYSTEM IS REQUIRED TO HAVE A MANUFACTURERS SERVICE RATING THAT MEETS OR EXCEEDS THE OVERALL DRYER VENT LENGTH OF THIS SYSTEM AS CALCULATED PER THE DRYER MANUFACTURER REQUIREMENTS.

MECHANICAL CONTRACTOR TO PROVIDE PERMANENTLY AFFIXED LABEL IDENTIFYING THE TOTAL EQUIVALENT LENGTH OF THE UNIT DRYER EXHAUST SYSTEM AS LISTED ABOVE WITHIN 6 FEET OF THE DRYER EXHAUST DUCTWORK CONNECTION STATING "THIS DRYER VENT IS 36' LONG AND REQUIRES A DRYER CAPABLE OF MEETING THIS DRYER VENT LENGTH".

LAKE COUNTY BUILDING SERVICES
Any errors or omissions in these plans shall be made to conform with the applicable code requirements per Florida Building Code, in accordance with Section 107. Plans were reviewed for code compliance and shall be kept on job site.

RECEIVED FEB 14 2019

PERMIT REVIEW STAMP

ISSUE HISTORY

No.	Date	Description
1	02/08/2019	ISSUE FOR PERMIT

REVISION HISTORY

No.	Date	Description

© 2019 These documents and the concepts and designs of FUGLEBERG KOCH, PLLC - (A26000210), and are issued only for the specific project noted on these drawings. Any reproductions, revisions, or modifications of these documents without the expressed written consent of Fugleberg Koch, PLLC is prohibited by law.

FUGLEBERG KOCH
2555 Temple Trail, Winter Park, FL 32789 (407) 629-0595
www. fuglebergkoch.com BR569

CONSULTANT
Joseph, Lawrence & Co
Consulting Engineers
1180 HARWOOD AVE. SUITE 3000
ALTAMONTE SPRINGS, FLORIDA 32714
TEL: 321.972.4466
WWW.JLCENG.COM
CA NO. 28730

JLC 17.0137.00

ADAM J BARNEY LICENSE No. 69124 STATE OF FLORIDA PROFESSIONAL ENGINEER

Adam Joseph Barney
P.E. #:69124

Drawn:	MJR/KCM
Checked:	BLS/AJB
Approval:	BLS/AJB
Date:	02/08/2019
Project #:	5389

SUMMER BAY APTS. II
LAKE COUNTY, FL

ENLARGED TYPICAL UNIT PLANS - MECHANICAL

M4.03

APARTMENT DX SPLIT AIR HANDLING UNIT SCHEDULE

MARK	LOCATION SERVED	FAN					COOLING COIL			FILTERS			ELECTRIC HEATING COIL			SINGLE POINT UNIT ELEC. REQUIREMENTS		UNIT INFORMATION				
		TOTAL AIR FLOW (CFM)	OUTSIDE AIR FLOW (CFM)	EXTERNAL STATIC PRESS. (IN.WG.)	DRIVE TYPE	HP	ENTERING AIR TEMP. (F° DB/WB)	LEAVING AIR TEMP. (F° DB/WB)	TOTAL CAPACITY (BTUH)	TYPE	EFFICIENCY	THICKNESS	NO. OF STAGES	TOTAL KW	VOLTAGE/ PHASE	SINGLE CIRCUIT MCA	SINGLE CIRCUIT MOCP	UNIT SIZE (H"xW"xD")	OPERATING WEIGHT (LBS.)	MANUFACTURER	MODEL NUMBER	NOTES
AHU-1	UNITS A1, A1S, S1	600	–	0.3	DIRECT	1/5	80.0/67.0	56.0/54.0	18,000	THROWAWAY	25%-30%	1"	1	5	208/1	23.6	30	36"x20"x16"	99	GOODMAN OR EQUAL	AWUF180516AA	1, 2
AHU-2	UNITS B2, B2S	800	–	0.3	DIRECT	1/5	80.0/67.0	56.0/54.0	24,000	THROWAWAY	25%-30%	1"	1	5	208/1	23.6	30	36"x20"x16"	99	GOODMAN OR EQUAL	AWUF240516AA	1, 2
AHU-3	UNITS B1, C1	1,000	–	0.3	DIRECT	1/3	80.0/67.0	56.0/54.0	28,000	THROWAWAY	25%-30%	1"	1	5	208/1	23.6	30	36"x24"x21"	110	GOODMAN OR EQUAL	AWUF300516AA	1, 2

NOTES:
1. PROVIDE COMPLETE WITH PULL TYPE DISCONNECT SWITCH AND 7-DAY PROGRAMMABLE THERMOSTAT WITH NIGHT SET BACK. (SEE OWNER)
2. ROUTE AND SIZE REFRIGERANT LINES PER MANUFACTURES REQUIREMENTS.

APARTMENT DX SPLIT CONDENSING UNIT SCHEDULE (STRAIGHT COOL)

MARK	LOCATION	COMPRESSOR			CONDENSER FANS		ELECTRICAL							UNIT INFORMATION		MANUFACTURER	MODEL NUMBER	NOTES
		OUTDOOR DESIGN TEMP. (F°)	QTY.	CAPACITY STEPS %	QTY.	NOMINAL HP	VOLTAGE/ PHASE	COMPRESSOR RLA EACH	CONDENSER FANS QTY.	CONDENSER FANS FLA (EA.)	MCA	MOCP	SEER	UNIT SIZE (H"xW"xD")	OPERATING WEIGHT (LBS.)			
CU-1	EXTERIOR	95°	1	100	1	1/8	208/1	6.0	1	0.7	8.2	15	14.0	34"x29"x29"	131	GOODMAN OR EQUAL	GSX140181AA	1
CU-2	EXTERIOR	95°	1	100	1	1/8	208/1	7.7	1	0.7	10.3	15	14.0	38"x29"x29"	131	GOODMAN OR EQUAL	GSX140241AA	1
CU-3	EXTERIOR	95°	1	100	1	1/6	208/1	10.5	1	0.95	14.1	20	14.0	38"x29"x29"	162	GOODMAN OR EQUAL	GSX140301AA	1

NOTES:
1. PROVIDE COMPLETE WITH PULL TYPE DISCONNECT SWITCH, TIME DELAY RELAY AND ANTI-SHORT CYCLE TIMER.

DX SPLIT AIR HANDLING UNIT SCHEDULE (CORRIDORS)

MARK	LOCATION SERVED	FAN					COOLING COIL			FILTERS			ELECTRIC HEATING COIL			SINGLE POINT UNIT ELEC. REQUIREMENTS		UNIT INFORMATION				
		TOTAL AIR FLOW (CFM)	OUTSIDE AIR FLOW (CFM)	EXTERNAL STATIC PRESS. (IN.WG.)	DRIVE TYPE	HP	ENTERING AIR TEMP. (F° DB/WB)	LEAVING AIR TEMP. (F° DB/WB)	TOTAL CAPACITY (BTUH)	TYPE	EFFICIENCY	THICKNESS	NO. OF STAGES	TOTAL KW	VOLTAGE/ PHASE	SINGLE CIRCUIT MCA	SINGLE CIRCUIT MOCP	UNIT SIZE (H"xW"xD")	OPERATING WEIGHT (LBS.)	MANUFACTURER	MODEL NUMBER	NOTES
AHU-1.1	LOBBY, CORRIDOR	1,000	90	0.3	DIRECT	1/3	77.6/64.7	56.0/54.0	30,000	THROWAWAY	25%-30%	1"	1	5	208/1	27	30	45"x17.5"x21"	129	GOODMAN	ASPT30D14	1, 2
AHU-1.2	CORRIDOR	800	60	0.3	DIRECT	1/3	78.0/65.0	56.0/54.0	24,000	THROWAWAY	25%-30%	1"	1	5	208/1	27	30	54"x24"x21"	129	GOODMAN	ASPT24B14	1, 2
AHU-1.3	CORRIDOR	800	60	0.3	DIRECT	1/3	78.0/65.0	56.0/54.0	24,000	THROWAWAY	25%-30%	1"	1	5	208/1	27	30	54"x24"x21"	129	GOODMAN	ASPT24B14	1, 2
AHU-1.4	CORRIDOR	800	60	0.3	DIRECT	1/3	78.0/65.0	56.0/54.0	24,000	THROWAWAY	25%-30%	1"	1	5	208/1	27	30	54"x24"x21"	129	GOODMAN	ASPT24B14	1, 2
AHU-2.1	LOBBY, CORRIDOR	1,000	90	0.3	DIRECT	1/3	77.6/64.7	56.0/54.0	30,000	THROWAWAY	25%-30%	1"	1	5	208/1	27	30	45"x17.5"x21"	129	GOODMAN	ASPT30D14	1, 2
AHU-2.2	CORRIDOR	800	60	0.3	DIRECT	1/3	78.0/65.0	56.0/54.0	24,000	THROWAWAY	25%-30%	1"	1	5	208/1	27	30	54"x24"x21"	129	GOODMAN	ASPT24B14	1, 2
AHU-2.3	CORRIDOR	800	60	0.3	DIRECT	1/3	78.0/65.0	56.0/54.0	24,000	THROWAWAY	25%-30%	1"	1	5	208/1	27	30	54"x24"x21"	129	GOODMAN	ASPT24B14	1, 2
AHU-2.4	CORRIDOR	800	60	0.3	DIRECT	1/3	78.0/65.0	56.0/54.0	24,000	THROWAWAY	25%-30%	1"	1	5	208/1	27	30	54"x24"x21"	129	GOODMAN	ASPT24B14	1, 2

NOTES:
1. PROVIDE HONEYWELL VISIONPRO 8000 TOUCHSCREEN 7-DAY PROGAMMABLE THERMOSTAT/HUMIDISTAT.
2. ROUTE AND SIZE REFRIGERANT LINES PER MANUFACTURES REQUIREMENTS.

AIR DEVICE SCHEDULE (UNITS)

MARK	DESCRIPTION	FACE SIZE	NECK	MATERIAL	MANUFACTURER & MODEL NO.	NOTES
A	LOUVERED FACE SUPPLY DIFFUSER – CEILING	6"x4"	SEE PLAN	ALUMINUM	METALAIRE LM-1 OR EQUAL	1.
B	LOUVERED FACE SUPPLY DIFFUSER – CEILING	10"x8"	SEE PLAN	ALUMINUM	METALAIRE LM-1 OR EQUAL	1.
C	LOUVERED FACE SUPPLY DIFFUSER – CEILING	10"x10"	SEE PLAN	ALUMINUM	METALAIRE LT-1 OR EQUAL	1.
D	RETURN AIR TRANSFER GRILLE	14"x8"	SEE PLAN	ALUMINUM	TAMARACK TECHNOLOGIES RAP 14.8 OR EQUAL	1.
E	LOUVERED FACE RETURN/TRANSFER GRILLE – SIDEWALL	14"x8"	SEE PLAN	ALUMINUM	METALAIRE RH-1 OR EQUAL	1.
F	LOUVERED FACE RETURN GRILLE – SIDEWALL	18"x18"	SEE PLAN	ALUMINUM	METALAIRE RH-1 OR EQUAL	1.

NOTES:
1. COORIDINATE SURFACE FINISHES WITH ARCHITECTURAL DRAWINGS.

FAN SCHEDULE

MARK	AREA SERVED	TYPE	CFM	T.S.P.	WATTS	R.P.M.	VOLTS/PH	SONES	MANUFACTURER & MODEL NO.	NOTES
EF-1	RESTROOM	WALL MOUNT	70	0.1	13.1	1,250	120/1ø	2.0	DELTA SLM70 OR EQUAL	1. 2. & 3.
EF-2	GARAGES	CEILING MOUNT	210	0.25	56.2	961	120/1ø	1.5	GREENHECK CSP-A250	2. 3. 4. & 5.

NOTES:
1. EXHAUST FAN TO BE CONTROLLED BY INDIVIDUAL SWITCH WITHIN RESTROOM.
2. PROVIDE WITH VIBRATION ISOLATOR KIT, INTEGRAL BACKDRAFT DAMPER, & PLASTIC WALL CAP.
3. PROVIDE 5 SIDED FIRE RATED BOX OR FIRE RATED PUTTY PACK WHEN WALL MOUNTED FAN IS INSTALLED IN 1 HR RATED WALL PER ARCHITECTURAL ADD/ALTERNATE WALL SYSTEM.
4. PROVIDE WITH CARBON MONOXIDE DETECTOR MOUNTED ON GARAGE WALL FOR CONTROL OF FAN.
5. GARAGE FAN EXHAUST IS BASED OFF OF FLORIDA MECHANICAL CODE TABLE 403.3; .75 CFM PER SQUARE FOOT.

CLUBHOUSE DX SPLIT CONDENSING UNIT SCHEDULE (STRAIGHT COOL)

MARK	LOCATION	COMPRESSOR			CONDENSER FANS		ELECTRICAL							UNIT INFORMATION		MANUFACTURER	MODEL NUMBER	NOTES
		OUTDOOR DESIGN TEMP. (F°)	QTY.	CAPACITY STEPS %	QTY.	NOMINAL HP	VOLTAGE/ PHASE	COMPRESSOR RLA EACH	CONDENSER FANS QTY.	CONDENSER FANS FLA (EA.)	MCA	MOCP	SEER	UNIT SIZE (H"xW"xD")	OPERATING WEIGHT (LBS.)			
CU-1.1	ROOF	95°	1	100	1	1/6	208/1	12.8	1	1.1	17.1	25	14	32"x29"x29"	162	GOODMAN	GSX140301AA	1
CU-1.2	ROOF	95°	1	100	1	1/12	208/1	10.9	1	0.6	14.2	25	14	27"x26"x26"	131	GOODMAN	GSX140241AA	1
CU-1.3	ROOF	95°	1	100	1	1/12	208/1	10.9	1	0.6	14.2	25	14	27"x26"x26"	131	GOODMAN	GSX140241AA	1
CU-1.4	ROOF	95°	1	100	1	1/12	208/1	10.9	1	0.6	14.2	25	14	27"x26"x26"	131	GOODMAN	GSX140241AA	1
CU-2.1	ROOF	95°	1	100	1	1/6	208/1	12.8	1	1.1	17.1	25	14	32"x29"x29"	162	GOODMAN	GSX140301AA	1
CU-2.2	ROOF	95°	1	100	1	1/12	208/1	10.9	1	0.6	14.2	25	14	27"x26"x26"	131	GOODMAN	GSX140241AA	1
CU-2.3	ROOF	95°	1	100	1	1/12	208/1	10.9	1	0.6	14.2	25	14	27"x26"x26"	131	GOODMAN	GSX140241AA	1
CU-2.4	ROOF	95°	1	100	1	1/12	208/1	10.9	1	0.6	14.2	25	14	27"x26"x26"	131	GOODMAN	GSX140241AA	1

NOTES:
1. PROVIDE COMPLETE WITH DISCONNECT SWITCH, TIME DELAY RELAY AND ANTI-SHORT CYCLE TIMER.

MINI-SPLIT AIR HANDLING UNIT SCHEDULE

MARK	LOCATION SERVED	FAN					COOLING COIL						FILTERS			ELECTRIC HEATING COIL			SINGLE POINT UNIT ELEC. REQUIREMENTS			UNIT INFORMATION				
		TOTAL AIR FLOW (CFM)	OUTSIDE AIR FLOW (CFM)	EXTERNAL STATIC PRESS. (IN.WG.)	DRIVE TYPE	FLA	ENTERING AIR TEMP. (F° DB/WB)	LEAVING AIR TEMP. (F° DB/WB)	TOTAL CAPACITY (BTUH)	SENSIBLE CAPACITY (BTUH)	COIL AREA (SQ.FT.)	COIL ROW/FINS	TYPE	EFFICIENCY	THICKNESS	TOTAL CAPACITY (BTUH)	VOLTS/ PHASE	HEATER AMPS	VOLTAGE/ PHASE	SINGLE CIRCUIT MCA	SINGLE CIRCUIT MOCP	UNIT SIZE (H"xW"xD")	OPERATING WEIGHT (LBS.)	MANUFACTURER	MODEL NUMBER	NOTES
MAU-1	FACP, COMM RM'S	440	NA	NA	NA	0.51	80/67	56.0/54.0	17,200	NA	NA	NA	INTERNAL	25%-30%	NA	NA	NA	NA	208/1	1	15	12"x32"x9"	22	MITSUBISHI	MSY-GE18NA	1, 2, & 3

NOTES:
1. POWER FOR INDOOR UNIT PROVIDED FROM EXTERIOR CONDENSER. COORDINATE WITH ELECTRICAL CONTRACTOR TO PROVIDE POWER WIRING BETWEEN EACH UNIT IN FIELD.
2. ROUTE AND SIZE REFRIGERANT LINES PER MANUFACTURES REQUIREMENTS.
3. MOUNT AS HIGH ON WALL AS POSSIBLE.

LAKE COUNTY BUILDING SERVICES
Any errors or omissions in these plans shall be made to conform with the applicable code requirements per Florida Building Code, in accordance with Section 107. Plans were reviewed for code compliance and shall be kept on job site.

MINI- SPLIT CONDENSING UNIT SCHEDULE

MARK	LOCATION	COMPRESSOR			CONDENSER FANS		ELECTRICAL							UNIT INFORMATION		MANUFACTURER	MODEL NUMBER	NOTES
		OUTDOOR DESIGN TEMP. (F°)	QTY.	CAPACITY STEPS %	QTY.	NOMINAL HP	VOLTAGE/ PHASE	COMPRESSOR RLA/LRA	CONDENSER FANS QTY.	CONDENSER FANS F.L.A.	MCA	MOCP	SEER	UNIT SIZE (H"xW"xD")	OPERATING WEIGHT (LBS.)			
MCU-1	EXTERIOR	95	1	100	1	–	208/1	NA	1	0.93	14	20	15	33"x34"x12"	119	MITSUBISHI	MUY-GE18NA	1.

NOTES:
1. PROVIDE COMPLETE WITH TIME DELAY RELAY AND ANTI-SHORT CYCLE TIMER.
2. DISCONNECT SWITCH PROVIDED BY DIVISION 16.

RECEIVED FEB 14 2019

PERMIT REVIEW STAMP

ISSUE HISTORY

No.	Date	Description
1	02/08/2019	ISSUE FOR PERMIT

REVISION HISTORY

No.	Date	Description

FUGLEBERG KOCH
2555 Temple Trail, Winter Park, FL 32789 (407) 629-0595
www. fuglebergkoch.com BR569

CONSULTANT
Joseph, Lawrence & Co
Consulting Engineers
1180 HARWOOD AVE. SUITE 3000
ALTAMONTE SPRINGS, FLORIDA 32714
TEL: 321.972.4466
WWW.JLCENG.COM
CA NO. 28730

JLC 17.0137.00
ADAM J BARNEY LICENSE No. 69124 STATE OF FLORIDA PROFESSIONAL ENGINEER
Adam Joseph Barney
P.E. #:69124

SUMMER BAY APTS. II
LAKE COUNTY, FL

Drawn:	MJR/KCM
Checked:	BLS/AJB
Approval:	BLS/AJB
Date:	02/08/2019
Project #:	5389

SCHEDULES - MECHANICAL

M5.01

© 2015 These documents and their contents are the property of FUGLEBERG KOCH, PLLC - AA26002103, and are issued only for the specific project noted on these drawings. Any reproductions, revisions, or modifications of these documents without the expressed written consent of Fugleberg Koch, PLLC is prohibited by law.

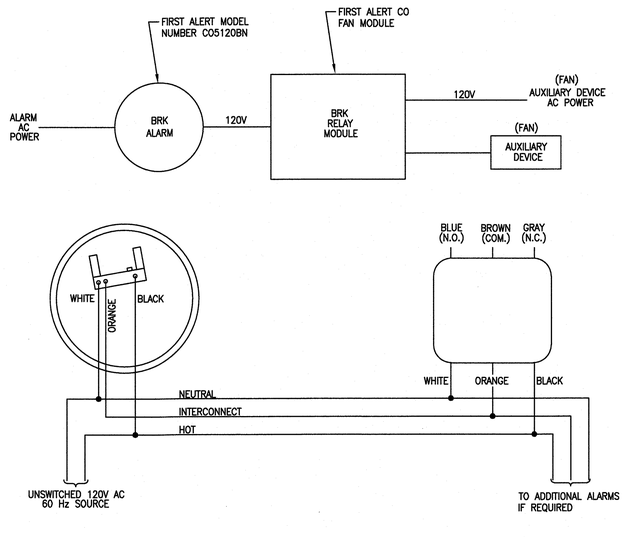

6 NTS CARBON MONOZIDE ALARM WITH FAN RELAY DETAIL

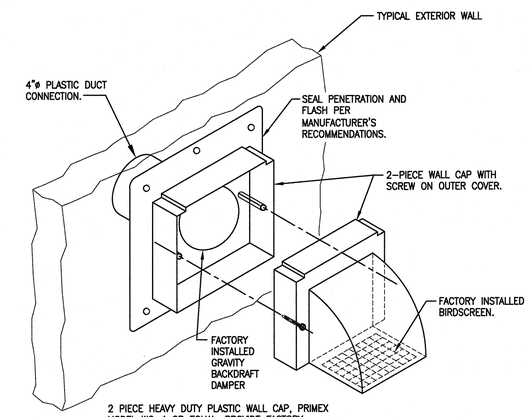

2 PIECE HEAVY DUTY PLASTIC WALL CAP, PRIMEX MODEL WC-4 OR EQUAL. PROVIDE FACTORY INSTALLED BACKDRAFT DAMPER FOR DRYER VENT AND RESTROOM EXHAUST FANS. REMOVE BACKDRAFT DAMPER FOR USE AS OUTSIDE AIR INTAKE. FOR DRYER APPLICATIONS USE THE NO BIRD SCREEN (NS) MODEL. PAINT TO OWNERS SPEC.

5 NTS TYPICAL WALL JACK DETAIL

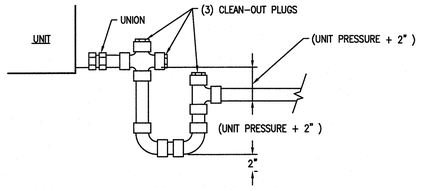

NOTES :

1. CONDENSATE DRAIN SHALL BE PIPED FULL SIZE OF UNIT CONNECTION.
2. CONDENSATE PANS SHALL BE INSTALLED WITH ADEQUATE PITCH TO ENSURE POSITIVE DRAINAGE OF ACCUMILATED CONDENSATE.
3. TRAP CONDENSATE AND DISCHARGE PER PLAN.

4 NTS CONDENSATE DRAIN DETAIL

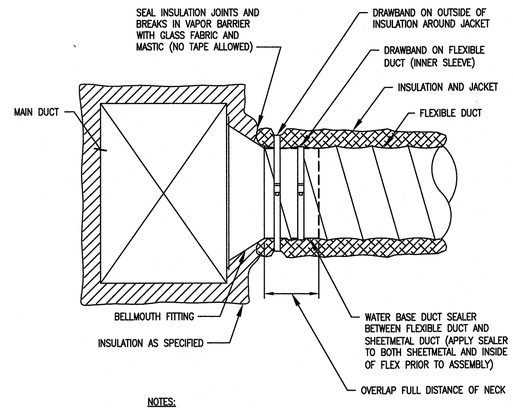

NOTES:

1. TYPICAL FOR: LOW PRESSURE AND HIGH PRESSURE CONNECTION TO MAIN DUCT, FAN TERMINAL UNITS, VARIABLE AIR VOLUME UNITS, AND DIFFUSERS.
2. DRAWBANDS SHALL BE EQUIVALENT TO PANDUIT PLT-H.

3 NTS FLEXIBLE DUCT CONNECTION DETAIL

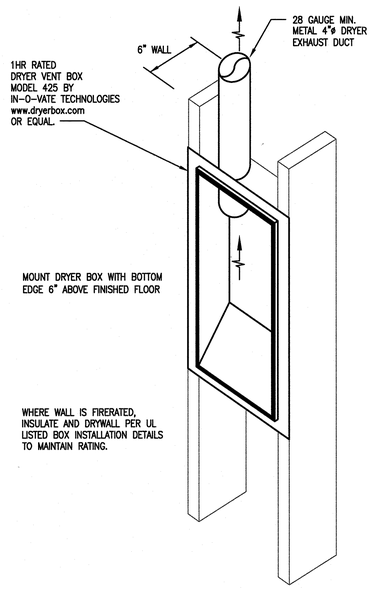

2 NTS DRYER VENT BOX DETAIL

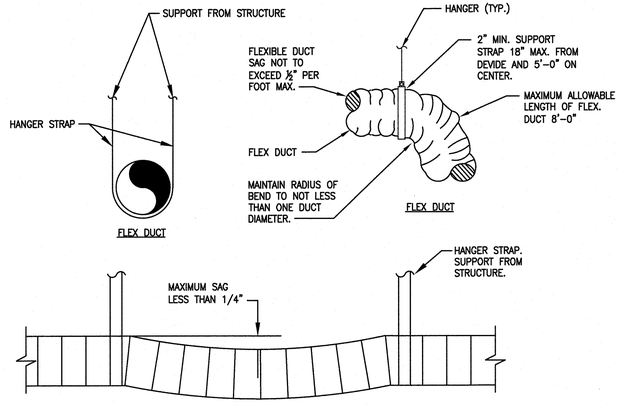

NOTES:

1. MAXIMUM SPACING BETWEEN HANGER LOCATIONS SHALL BE 5'-0".
2. STRAPS SHALL BE MINIMUM 1 1/2".
3. REFER TO SMACNA AND FLORIDA MECHANICAL CODE FOR ADDITIONAL REQUIREMENTS.
4. DUCTWORK SHALL BE SEALED IN MASTIC.

1 NTS FLEX DUCT HANGER DETAIL

LAKE COUNTY BUILDING SERVICES
Any errors or omissions in these plans shall be made to conform with the applicable code requirements per Florida Building Code, in accordance with Section 107. Plans were reviewed for code compliance and shall be kept on the site.

RECEIVED FEB 14 2019

PERMIT REVIEW STAMP

ISSUE HISTORY

No.	Date	Description
1	02/08/2019	ISSUE FOR PERMIT

REVISION HISTORY

No.	Date	Description

© 2019 These drawings and the concepts are the property of FUGLEBERG KOCH, PLLC - FL#0000729, and are issued only for the specific project shown on these drawings. Any reproductions, revisions, or modifications of these documents without the expressed written consent of Fugleberg Koch, PLLC is prohibited by law.

FUGLEBERG KOCH
2555 Temple Trail, Winter Park, FL 32789 (407) 629-0595
www.fuglebergkoch.com BR569

CONSULTANT
Joseph, Lawrence & Co
Consulting Engineers
1180 HARWOOD AVE. SUITE 3000
ALTAMONTE SPRINGS, FLORIDA 32714
TEL 321.972.4466
WWW.JLCENG.COM
CA NO. 28730

JLC 17.0127.00

STATE OF FLORIDA ADAM J. BARNEY LICENSE No. 69124 PROFESSIONAL ENGINEER
Adam Joseph Barney
P.E. #:69124

Drawn:	MJR/KCM
Checked:	BLS/AJB
Approval:	BLS/AJB
Date:	02/08/2019
Project #:	5389

SUMMER BAY APTS. II
LAKE COUNTY, FL

DETAILS - MECHANICAL

M6.01

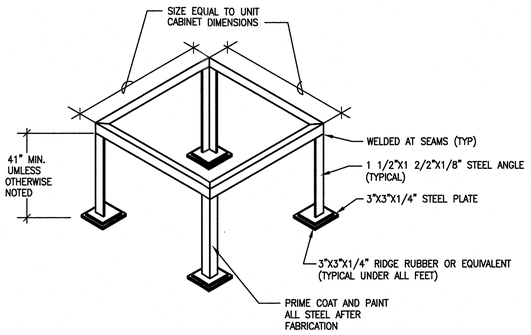

7 NTS STEEL ANGLE UNIT STAND DETAIL

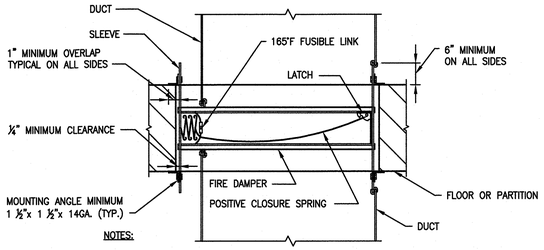

NOTES:

1. DAMPERS SHALL BE CONSTRUCTED, TESTED AND LABELLED IN ACCORDANCE WITH UNDERWRITERS LABORATORIES SAFETY STANDARD 555 FOR DYNAMIC SYSTEMS AND SHALL BE PROVIDED WITH CLOSURE SPRINGS.
2. INSTALLATION SHALL BE IN STRICT ACCORDANCE WITH THE MAUFACTURER'S INSTRUCTIONS.
3. SECURE MOUNTING ANGLES TO SLEEVE AT A MAXIMUM 6" ON CENTER.
4. CLEARANCE BETWEEN FIRE DAMPER SLEEVE AND OPENING SHALL BE ⅛" PER FOOT OF HEIGHT (OR WIDTH) UNLESS OTHERWISE STATED IN THE LISTING OF THE ASSEMBLY.
5. PROVIDE ACCESS PANEL IN DUCT AT A POINT ADJACENT TO FUSIBLE LINKAGE.

6 NTS FIRE DAMPER DETAIL

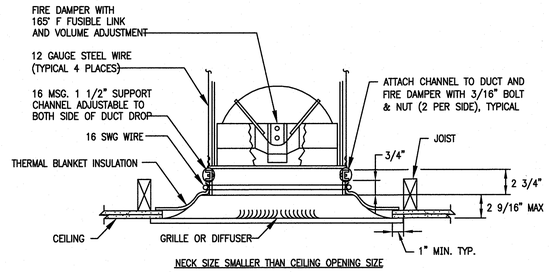

NECK SIZE SMALLER THAN CEILING OPENING SIZE

NOTES:

1. DAMPER SHALL BE U.L. CLASSIFIED UNDER U.L. STANDARD 555.
2. THERMAL BLANKET INSULATION SHALL BE U.L. CLASSIFIED UNDER U.L. STANDARD 555.
3. APPLIES TO DIFFUSERS RETURN GRILLES & TRANSFER GRILLES PENETRATING RATED CEILING.

5 NTS RADIATION DAMPER DETAIL

RUSKIN MODEL NUMBER CFD7T OR EQUAL

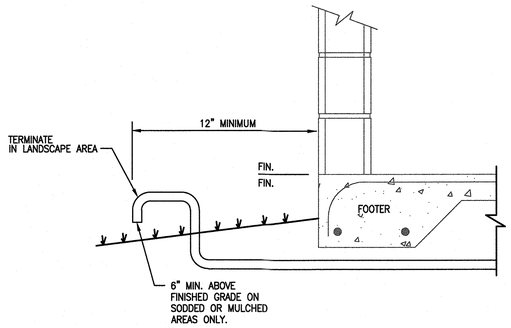

4 NTS CONDENSATE DRAIN TERMINATION DETAIL

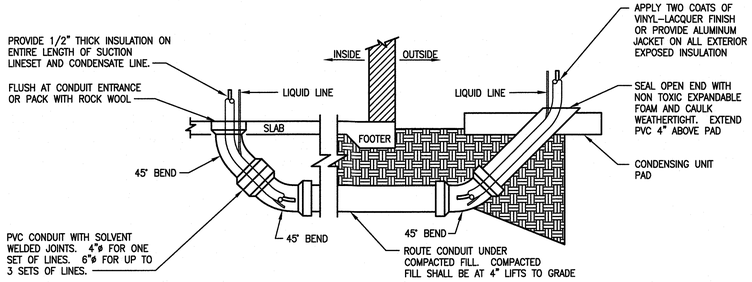

3 NTS REFRIGERANT SLEEVE DETAIL

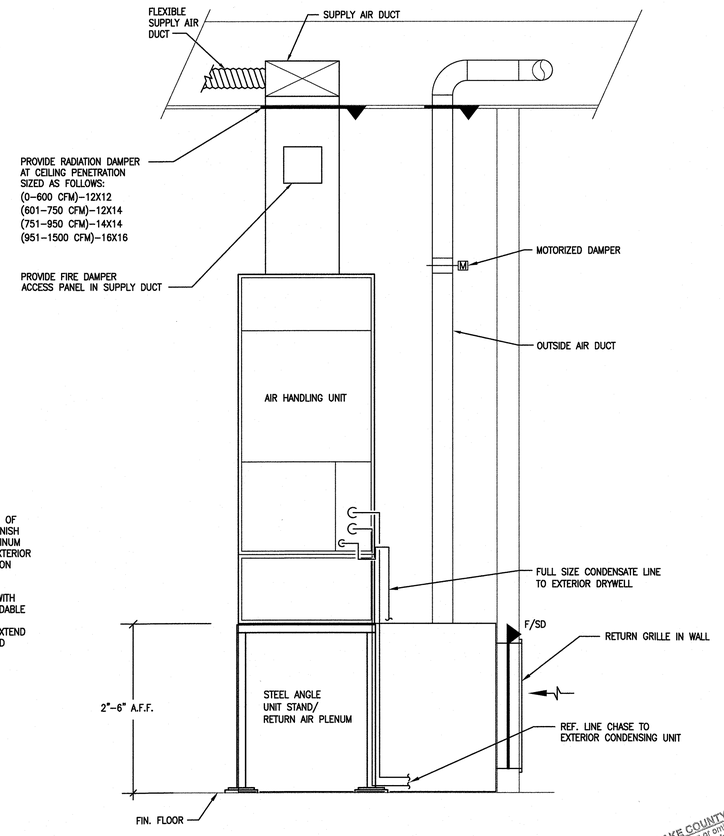

2 NTS VERTICAL AHU DETAIL (CORRIDORS)

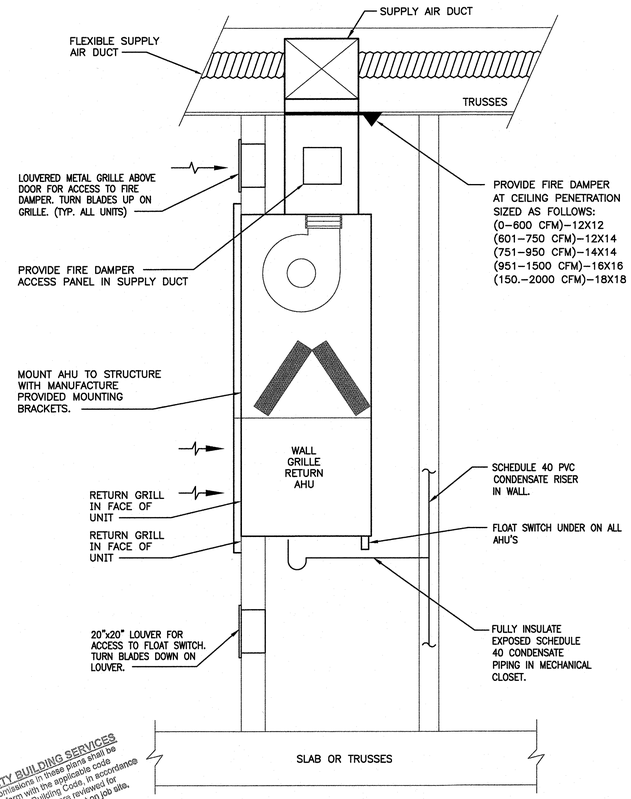

LAKE COUNTY BUILDING SERVICES
Any errors or omissions in these plans shall be made to conform with the applicable code requirements per Florida Building Code, in accordance with Section 107. Plans were reviewed for code compliance and shall be kept on job site.

1 NTS WALL MOUNTED AHU DETAIL (UNITS)

RECEIVED FEB 14 2019

PERMIT REVIEW STAMP

ISSUE HISTORY

No.	Date	Description
1	02/08/2019	ISSUE FOR PERMIT

REVISION HISTORY

No.	Date	Description

© 2013 These documents and their contents are the property of FUGLEBERG KOCH, P.L.C. - LA0002103, and are issued only for the specific project noted on these drawings. Any reproductions, revisions, or modifications of these documents without the expressed written consent of Fugleberg Koch, P.L.C. is prohibited by law.

FUGLEBERG KOCH
2555 Temple Trail, Winter Park, FL 32789 (407) 629-0595
www. fuglebergkoch.com BR569

CONSULTANT
Joseph, Lawrence & Co
Consulting Engineers
1180 HARWOOD AVE. SUITE 3000
ALTAMONTE SPRINGS, FLORIDA 32714
TEL: 321.972.4466
WWW.JLCENG.COM
CA NO. 28730

JLC 17.0137.00

ADAM T. BARNEY LICENSE NO. 69124 STATE OF FLORIDA PROFESSIONAL ENGINEER
Adam T. Barney
P.E. #:69124

SUMMER BAY APTS. II
LAKE COUNTY, FL

Drawn:	MJR/KCM
Checked:	BLS/AJB
Approval:	BLS/AJB
Date:	02/08/2019
Project #:	5389

DETAILS - MECHANICAL

M6.02

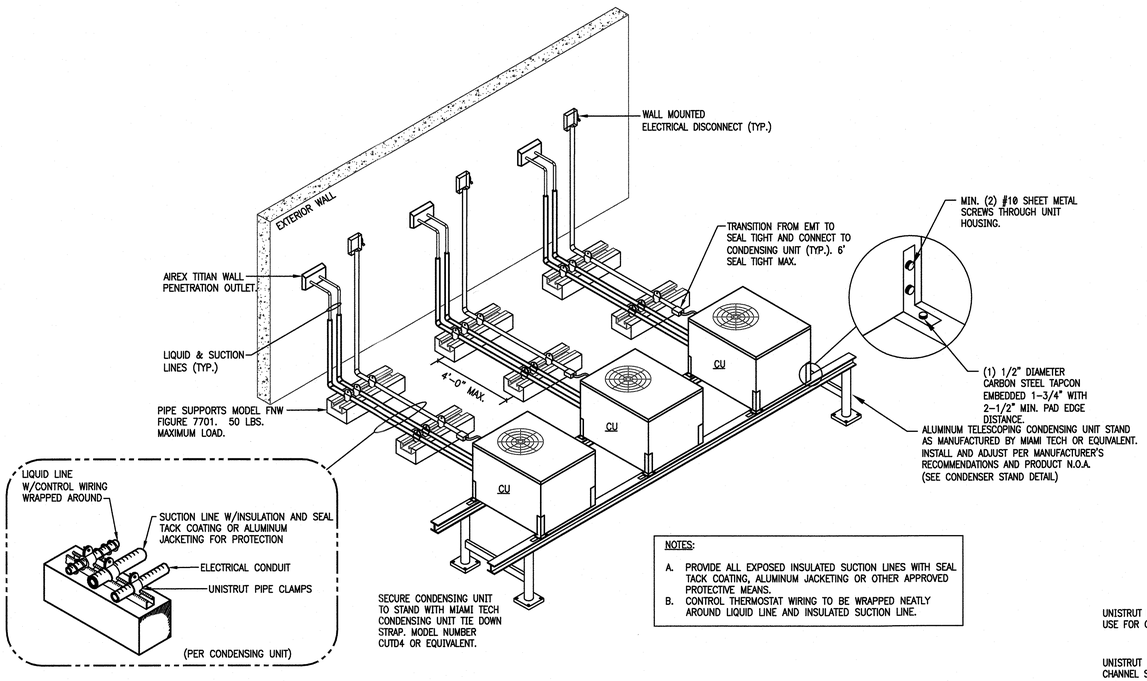

NOTES:

A. PROVIDE ALL EXPOSED INSULATED SUCTION LINES WITH SEAL TACK COATING, ALUMINUM JACKETING OR OTHER APPROVED PROTECTIVE MEANS.
B. CONTROL THERMOSTAT WIRING TO BE WRAPPED NEATLY AROUND LIQUID LINE AND INSULATED SUCTION LINE.

5 NTS — ROOF MOUNTED CONDENSING UNIT PIPING DETAIL (REFRIGERANT & ELECTRICAL ABOVE GRADE)

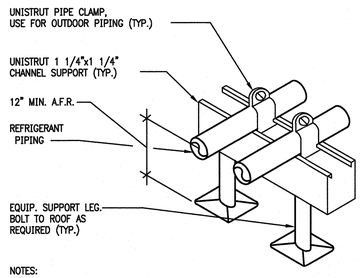

NOTES:

1. SUPPORTS SHALL BE INSTALLED A MAXIMUM 8'-0" O.C. AND AT EACH CHANGE OF DIRECTION OF PIPING.

3 NTS — ROOF PIPING SUPPORT DETAIL

ANCHOR SCHEDULE		
ANCHOR TYPE	HOST STRUCTURE	ANCHOR DESCRIPTION
1	STEEL	3/8"ø SAE GRADE 5 SHEET METAL SCREWS WITH 1"ø MIN. WASHER, TO STRUCTURAL A36 STEEL MEMBERS (3/16" MIN HOST THICKNESS)
2	CONCRETE	3/8"ø CARBON STEEL WEDGE-BOLT CONCRETE ANCHOR WITH 1"ø MIN. WASHER, 2½" EMBEDMENT & 6" MIN EDGE DISTANCE, 4 ANCHORS PER BASE PLATE, ONE IN EACH CORNER
3	WOOD	3/8"ø SAE GRADE 5 THREADED RODS WITH 3¼" MIN. WASHER AND LOCKING NUTS. 4 ANCHORS PER BASE PLATE, ONE IN EACH CORNER
4	STEEL	3/8"ø SAE GRADE 5 THRUBOLT WITH 1"ø MIN. WASHER & NUT, TO STRUCTURAL A36 STEEL MEMBERS (3/16" MIN HOST THICKNESS)

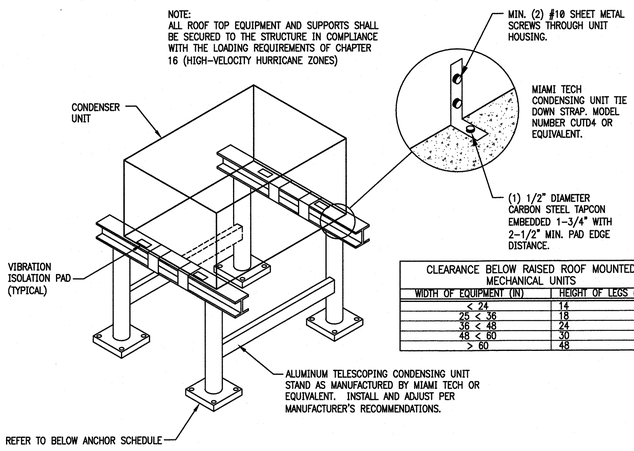

CLEARANCE BELOW RAISED ROOF MOUNTED MECHANICAL UNITS	
WIDTH OF EQUIPMENT (IN)	HEIGHT OF LEGS (IN)
< 24	14
25 < 36	18
36 < 48	24
48 < 60	30
> 60	48

2 NTS — CONDENSER RACK DETAIL

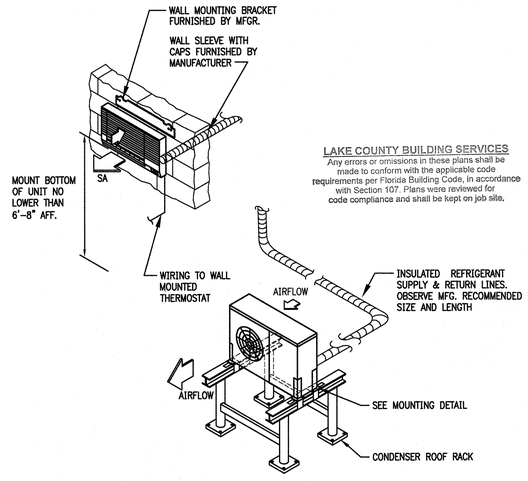

1 NTS — WALL MOUNTED SPLIT SYSTEM SUPPORT DETAIL

RECEIVED FEB 1 4 2019

LAKE COUNTY BUILDING SERVICES
Any errors or omissions in these plans shall be made to conform with the applicable code requirements per Florida Building Code, in accordance with Section 107. Plans were reviewed for code compliance and shall be kept on job site.

PERMIT REVIEW STAMP

ISSUE HISTORY

No.	Date	Description
1	02/08/2019	ISSUE FOR PERMIT

REVISION HISTORY

No.	Date	Description

© 2019 These documents and their contents are the property of FUGLEBERG KOCH, P.L.C. AA0003120, and are issued only for the specific project noted on these drawings. Any reproductions, revisions, or modifications of these documents without the expressed written consent of Fugleberg Koch, P.L.C. is prohibited by law.

FUGLEBERG KOCH
2555 Temple Trail, Winter Park, FL 32789 (407) 629-0595
www. fuglebergkoch.com BR569

CONSULTANT
Joseph, Lawrence & Co
Consulting Engineers
1180 HARWOOD AVE. SUITE 3000
ALTAMONTE SPRINGS, FLORIDA 32714
TEL: 321.972.4466
WWW.JLCENG.COM
CA NO. 28730

JLC 17.0137.00

Adam Joseph Barney
P.E. #:69124

SUMMER BAY APTS. II
LAKE COUNTY, FL

Drawn:	MJR/KCM
Checked:	BLS/AJB
Approved:	BLS/AJB
Date:	02/08/2019
Project #:	5389

DETAILS - MECHANICAL

M6.03

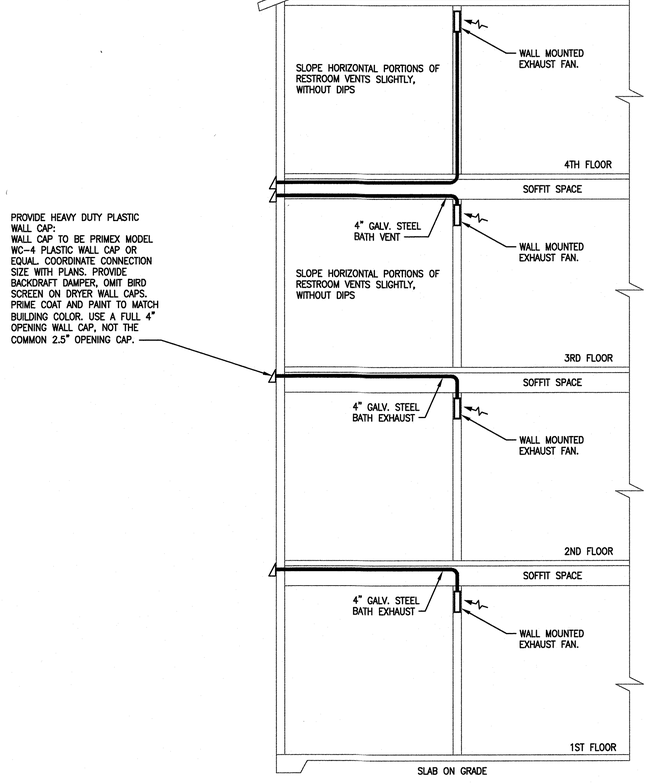

3 NTS BATH EXHAUST VENT DIAGRAM

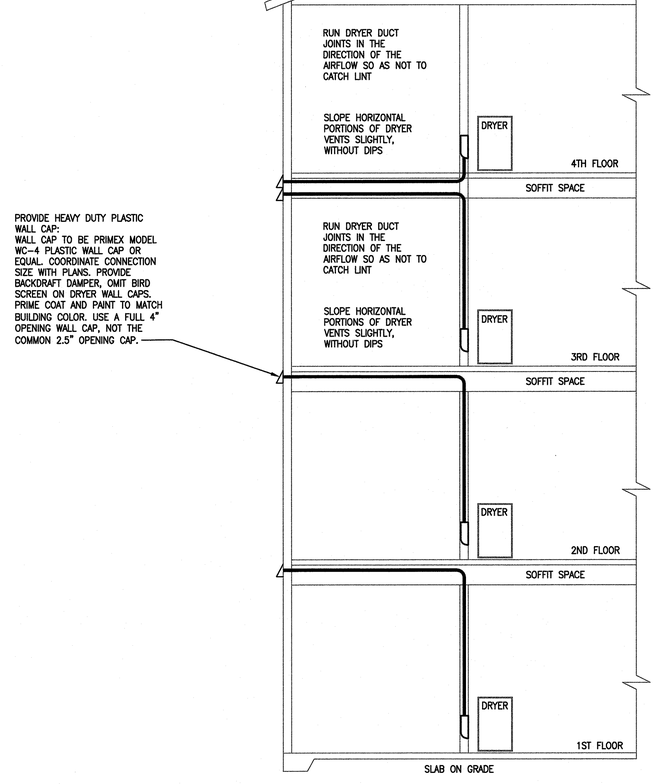

PROVIDE HEAVY DUTY PLASTIC WALL CAP: WALL CAP TO BE PRIMEX MODEL WC-4 PLASTIC WALL CAP OR EQUAL. COORDINATE CONNECTION SIZE WITH PLANS. PROVIDE BACKDRAFT DAMPER, OMIT BIRD SCREEN ON DRYER WALL CAPS. PRIME COAT AND PAINT TO MATCH BUILDING COLOR. USE A FULL 4" OPENING WALL CAP, NOT THE COMMON 2.5" OPENING CAP.

2 NTS DRYER EXHAUST VENT DIAGRAM

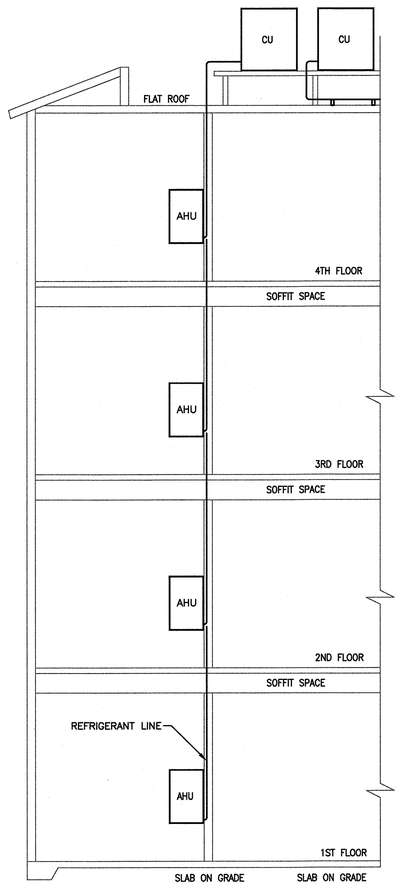

1 NTS REFRIGERANT LINE ROUTING DIAGRAM

LAKE COUNTY BUILDING SERVICES
Any errors or omissions in these plans shall be made to conform with the applicable code requirements per Florida Building Code, in accordance with Section 107. Plans were reviewed for code compliance and shall be kept on job site.

RECEIVED FEB 14 2019

PERMIT REVIEW STAMP

ISSUE HISTORY

No.	Date	Description
1	02/08/2019	ISSUE FOR PERMIT

REVISION HISTORY

No.	Date	Description

FUGLEBERG KOCH
2555 Temple Trail, Winter Park, FL 32789 (407) 629-0595
www.fuglebergkoch.com BR569

CONSULTANT
Joseph, Lawrence & Co
Consulting Engineers
1180 HARWOOD AVE. SUITE 3000
ALTAMONTE SPRINGS, FLORIDA 32714
TEL: 321.972.4466
WWW.JLCENG.COM
CA NO. 28730

JLC 17.0137.00

ADAM J BARNEY LICENSE No. 69124 STATE OF FLORIDA PROFESSIONAL ENGINEER

Adam Joseph Barney
P.E. #:69124

SUMMER BAY APTS. II
LAKE COUNTY, FL

Drawn:	MJR/KCM
Checked:	BLS/AJB
Approval:	BLS/AJB
Date:	02/08/2019
Project #:	5389

RISERS - MECHANICAL

M7.01

© 2015 These documents and their contents are the property of FUGLEBERG KOCH, PLLC - AA26002103, and are issued only for the specific project noted on these drawings. Any reproductions, revisions, or modifications of these documents without the expressed written consent of Fugleberg Koch, PLLC is prohibited by law.

MECHANICAL SPECIFICATIONS

GENERAL

THE GENERAL MECHANICAL SPECIFICATIONS APPLY TO THE WORK SPECIFIED IN THIS SECTION.

SCOPE OF WORK

FURNISH AND INSTALL COMPLETE AIR CONDITIONING SYSTEMS AS INDICATED ON THE DESIGN DRAWINGS AND AS OUTLINED WITHIN THESE SPECIFICATIONS. WORK SHALL INCLUDE BUT NOT BE LIMITED TO THE FABRICATION AND/OR INSTALLATION OF THE SCHEDULED AIR CONDITIONING UNITS, EXHAUST FANS, AIR DISTRIBUTION AND DUCTWORK.

CLEANING, TESTING AND ADJUSTING:
THE MECHANICAL CONTRACTOR, AT HIS EXPENSE, SHALL CLEAN, REPAIR, ADJUST, CHECK, BALANCE, AND PLACE IN SERVICE THE VARIOUS SYSTEMS HEREIN SPECIFIED WITH THEIR RESPECTIVE EQUIPMENT, ACCESSORIES AND PIPING. HE SHALL FURNISH ALL LABOR, MATERIALS, EQUIPMENT, AND TOOLS REQUIRED TO PERFORM TESTS REQUIRED BY THESE SPECIFICATIONS AND BY THE GOVERNING AUTHORITIES.

NO WORK SHALL BE COVERED OR CONCEALED UNTIL PROPERLY INSPECTED AND TESTED.

TESTING:
ADJUST THE AIR CONDITIONING SYSTEMS, VENTILATING SYSTEMS, FANS, ETC., TO DELIVER NOT LESS THAN THE REQUIRED AIR QUANTITY WITH QUANTITIES IN EXCESS TO BE SUBJECT TO THE APPROVAL OF THE ENGINEER IF FOUND TO NOT HAVE OBJECTIONABLE EFFECTS SUCH AS NOISE, DRAFTS, OR MOTOR OVERLOAD.

THIS CONTRACTOR SHALL PROVIDE THREE (3) COPIES OF A TEST AND BALANCE REPORT TO THE OWNER AT TIME OF SUBSTANTIAL COMPLETION INSPECTION.

THE TEST AND BALANCE REPORT SHALL BE TYPEWRITTEN AND CONTAIN THE FOLLOWING DATA:

1. DATE, TIME, WEATHER, WHEN TEST TAKEN.
2. AIR CAPACITIES AT EACH UNIT INCLUDING OUTSIDE AIR. (ENTERING AND LEAVING DB/WB)
3. STATIC PRESSURE THROUGH UNITS AND UNIT COMPONENTS.
4. MOTOR OPERATING VOLTAGE AND AMPERAGE.
5. DRIVE TYPES, SIZES AND SPEED RANGE.
6. IDENTIFICATION OF ALL AIR TERMINAL DEVICES WITH DESIGN CFM AND ACTUAL CFM.

ADDITIONALLY, SYSTEMS DRAWING CLEARLY MARKED TO IDENTIFY LOCATION OF EQUIPMENT AND AIR DEVICES TESTED SHALL BE PROVIDED ALONG WITH THE WRITTEN TEST AND BALANCE REPORT.

MAINTENANCE MANUALS

PROVIDE COMPLETE MAINTENANCE MANUALS (3 REQUIRED) ON ALL NEW EQUIPMENT. ORGANIZE OPERATING AND MAINTENANCE DATA INTO SUITABLE SETS OF MANAGEABLE SIZE. BIND PROPERLY INDEXED DATA INTO INDIVIDUAL, HEAVY-DUTY, 2-INCH, 3-RING VINYL COVERED BINDERS WITH POCKET FOLDERS FOR FOLDED SHEET INFORMATION. MARK APPROPRIATE IDENTIFICATION ON FRONT AND SPINE OF EACH BINDER. INCLUDE THE FOLLOWING TYPES OF INFORMATION. THE INFORMATION WILL BE TURNED OVER TO THE OWNER AT TIME OF SUBSTANTIAL COMPLETION:

- OPERATING AND MAINTENANCE INSTRUCTIONS
- SPARE PARTS LIST
- COPIES OF WARRANTIES
- WIRING DIAGRAMS
- INSPECTION REPORTS AND APPROVALS
- SHOP DRAWINGS AND PRODUCT DATA

TRAINING SERVICES

THOROUGHLY INSTRUCT THE OWNER'S REPRESENTATIVE IN THE OPERATION OF ALL EQUIPMENT FURNISHED AND LOCATION OF ALL VALVES AND CONTROL DEVICES.

TRAIN BUILDING OWNER'S PERSONNEL DURING NORMAL WORKING HOURS ON STARTUP AND SHUTDOWN PROCEDURES, TROUBLESHOOTING PROCEDURES, SERVICING AND PREVENTATIVE MAINTENANCE SCHEDULE AND PROCEDURES. REVIEW WITH THE OWNER'S PERSONNEL, THE DATA CONTAINED IN THE OPERATING AND MAINTENANCE MANUALS. SCHEDULE TRAINING WITH OWNER, PROVIDE AT LEAST 7-DAYS PRIOR NOTICE TO ARCHITECT/ENGINEER.

HANGERS AND SUPPORTS

PROVIDE ALL NECESSARY HANGER RODS, CLAMPS AND ATTACHMENTS TO PROPERLY INSTALL AND SUPPORT DUCTWORK, PIPING AND EQUIPMENT FROM THE BUILDING STRUCTURE.

PROVIDE ANY ANGLE IRON OR UNISTRUT AND SUSPENSION RODS REQUIRED TO INSTALL EQUIPMENT, PIPING AND DUCTWORK.

ALL SUPPORTS EXPOSED TO OUTDOORS SHALL BE CLEANED, PRIMED AND PAINTED TO PREVENT RUSTING. FINISH COLOR AS SELECTED BY OWNER.

THE USE OF BALING WIRE OR PERFORATED METAL STRAPPING IS NOT ACCEPTABLE FOR SUPPORTS.

WARRANTY/GUARANTEE:

THE CONTRACTOR SHALL WARRANTY/GUARANTEE AND MAINTAIN THE STABILITY OF WORK AND MATERIALS AND KEEP SAME IN PERFECT REPAIR AND CONDITION OF THE PERIOD OF ONE (1) YEAR.

DEFECTS OF ANY KIND DUE TO FAULTY WORK OR MATERIALS APPEARING DURING THE ABOVE MENTIONED PERIOD MUST BE IMMEDIATELY MADE GOOD BY THE CONTRACTOR AT HIS OWN EXPENSE TO THE ENTIRE SATISFACTION OF THE OWNER AND ARCHITECT AND ENGINEER. SUCH RECONSTRUCTION AND REPAIRS SHALL INCLUDE ALL DAMAGE TO THE FINISH OR FURNISHING OF THE BUILDING RESULTING FROM THE ORIGINAL DEFECT OR REPAIRS THERETO.

EQUIPMENT:

1.1 QUALITY ASSURANCE

A. ELECTRICAL COMPONENTS, DEVICES, AND ACCESSORIES: LISTED AND LABELED AS DEFINED IN NFPA 70, ARTICLE 100, BY A TESTING AGENCY ACCEPTABLE TO AUTHORITIES HAVING JURISDICTION, AND MARKED FOR INTENDED USE.
B. UNITS SHALL BE DESIGNED TO OPERATE WITH HCFC-FREE REFRIGERANTS.

1.2 WARRANTY

A. SPECIAL WARRANTY: MANUFACTURER'S STANDARD FORM IN WHICH MANUFACTURER AGREES TO REPLACE COMPONENTS LISTED BELOW THAT FAIL IN MATERIALS OR WORKMANSHIP WITHIN SPECIFIED WARRANTY PERIOD.

1. WARRANTY PERIOD FOR COMPRESSORS: MANUFACTURER'S STANDARD, BUT NOT LESS THAN FIVE (5) YEARS FROM DATE OF SUBSTANTIAL COMPLETION.
2. WARRANTY PERIOD FOR HEAT EXCHANGERS: MANUFACTURER'S STANDARD, BUT NOT LESS THAN FIVE (5) YEARS FROM DATE OF SUBSTANTIAL COMPLETION.

1.3 MANUFACTURERS

A. MANUFACTURERS: SUBJECT TO COMPLIANCE WITH REQUIREMENTS, PROVIDE PRODUCTS BY ONE OF THE FOLLOWING:
1. AAON
2. TRANE
3. CARRIER
4. YORK

NOTE:

ALL OF THE SPECIFICATIONS LISTED ON THIS SHEET MAY NOT BE USED FOR THIS PROJECT.

2.1 CABINET

A. CONSTRUCTION: SINGLE WALL.
B. EXTERIOR CASING: GALVANIZED STEEL WITH BAKED-ENAMEL PAINT FINISH WITH LIFTING LUGS AND KNOCKOUTS FOR ELECTRICAL AND PIPING CONNECTIONS.

2.2 INTERIOR CASING - GALVANIZED STEEL

A. BASE RAILS: GALVANIZED-STEEL RAILS FOR MOUNTING ON ROOF CURB.
B. SERVICE DOORS: HINGED ACCESS DOORS WITH NEOPRENE GASKETS.
C. INTERNAL INSULATION: FIBROUS-GLASS DUCT LINING COMPLYING WITH ASTM C 1071, TYPE II.

1. THICKNESS: 1 INCH (25 MM).
2. INSULATION ADHESIVE: COMPLY WITH ASTM C 916, TYPE I.
3. MECHANICAL FASTENERS: GALVANIZED STEEL, SUITABLE FOR ADHESIVE ATTACHMENT, MECHANICAL ATTACHMENT, OR WELDING ATTACHMENT TO CASING WITHOUT DAMAGING LINER AND WITHOUT CAUSING AIR LEAKAGE WHEN APPLIED AS RECOMMENDED BY MANUFACTURER.

D. CONDENSATE DRAIN PANS: FORMED SECTIONS OF STAINLESS-STEEL SHEET DESIGNED FOR SELF-DRAINAGE. FABRICATE PANS WITH SLOPES TO PRECLUDE BUILDUP OF MICROBIAL SLIME. PROVIDE FLOAT SWITCH.
E. ROOF CURB: FULL-PERIMETER CURB OF SHEET METAL, MINIMUM 14 INCHES HIGH, WITH WOOD NAILER, NEOPRENE SEALING STRIP, AND WELDED Z-BAR FLASHING.

2.3 SUPPLY-AIR FAN

A. FAN: FORWARD-CURVED CENTRIFUGAL; STATICALLY AND DYNAMICALLY BALANCED, GALVANIZED STEEL, MOUNTED ON SOLID-STEEL SHAFT WITH SELF-ALIGNING, PERMANENTLY LUBRICATED BALL BEARINGS.
B. MOTOR: TOTALLY ENCLOSED-SPEED MOTOR.
C. DRIVE: V-BELT DRIVE WITH MATCHING FAN PULLEY AND ADJUSTABLE MOTOR SHEAVES AND BELT ASSEMBLY WITH MINIMUM 1.4 SERVICE FACTOR.
D. MOUNTING: FAN WHEEL, MOTOR, AND DRIVES SHALL BE MOUNTED IN FAN CASING WITH SPRING ISOLATORS.

2.4 REFRIGERATION SYSTEM

A. FABRICATE AND LABEL REFRIGERATION SYSTEM TO COMPLY WITH ASHRAE 15, "SAFETY CODE FOR MECHANICAL REFRIGERATION."
B. COMPRESSORS: RECIPROCATING OR SCROLL COMPRESSORS WITH INTEGRAL VIBRATION ISOLATORS, INTERNAL OVERCURRENT AND OVERTEMPERATURE PROTECTION, INTERNAL PRESSURE RELIEF.
C. EER AND COP: 13 EER AND 11.8 COP VALUES AS DEFINED BY ASHRAE/IESNA 90.1, "ENERGY EFFICIENT DESIGN OF NEW BUILDINGS EXCEPT LOW-RISE RESIDENTIAL BUILDINGS."
D. REFRIGERANT: R-410A ON ALL NEW SYSTEMS.
E. REFRIGERATION SYSTEM SPECIALTIES: EXPANSION VALVE WITH REPLACEABLE THERMOSTATIC ELEMENT

1. REFRIGERANT DRYER.
2. HIGH-PRESSURE SWITCH.
3. LOW-PRESSURE SWITCH.
4. THERMOSTAT FOR COIL FREEZE-UP PROTECTION DURING LOW AMBIENT TEMPERATURE OPERATION OR LOSS OF AIR.
5. BRASS SERVICE VALVES INSTALLED IN DISCHARGE AND LIQUID LINES.
6. OPERATING CHARGE OF REFRIGERANT.

2.5 CAPACITY CONTROL

A. HOT-GAS BYPASS REFRIGERANT CONTROL FOR CAPACITY CONTROL WITH CONTINUOUS DEHUMIDIFICATION ON A SINGLE COMPRESSOR.

2.6 REFRIGERANT COILS

A. EVAPORATOR AND CONDENSER COILS SHALL BE DESIGNED, TESTED, FABRICATED, AND RATED ACCORDING TO ARI 410 AND ASHRAE 33. COILS SHALL BE LEAK TESTED UNDER WATER WITH AIR AT 315 PSIG (2170 KPA).

1. CAPACITY REDUCTION: CIRCUIT COILS FOR FACE CONTROL.
2. TUBES: COPPER.
3. FINS: ALUMINUM
4. FIN AND TUBE JOINT: MECHANICAL BOND.
5. SUCTION AND DISTRIBUTOR: SEAMLESS COPPER TUBE WITH BRAZED JOINTS.
6. COATING: PHENOLIC EPOXY CORROSION-PROTECTION COATING ON BOTH COILS.
7. SOURCE QUALITY CONTROL: TEST TO 450 PSIG (3105 KPA), AND TO 300 PSIG (2070 KPA) UNDERWATER.

B. CONDENSER FAN: PROPELLER TYPE, DIRECTLY DRIVEN BY MOTOR.
C. SAFETY CONTROLS:

1. COMPRESSOR MOTOR AND OUTSIDE-COIL FAN MOTOR LOW AMBIENT LOCKOUT.
2. OVERCURRENT PROTECTION FOR COMPRESSOR MOTOR AND OUTSIDE-COIL FAN MOTORS.

2.7 FILTERS

A. COMPLY WITH NFPA 90A.
B. DISPOSABLE PLEASTED FILTERS: 2-INCH- (50-MM-) THICK, FACTORY-FABRICATED, FLAT-PANEL-TYPE, DISPOSABLE AIR FILTERS WITH HOLDING FRAMES.
C. FILTER MEDIA TO BE INTERLACED GLASS FIBERS SPRAYED WITH NONFLAMMABLE ADHESIVE.
D. FILTER FRAMES TO BE GALVANIZED STEEL.

2.8 CONTROLS

A. FACTORY-WIRE CONNECTION FOR CONTROLS' POWER SUPPLY.
B. CONTROL DEVICES, INCLUDING SENSORS, TRANSMITTERS, RELAYS, SWITCHES, THERMOSTATS, HUMIDISTATS, DETECTORS, OPERATORS, ACTUATORS, AND VALVES, SHALL BE MANUFACTURER'S STANDARD ITEMS TO ACCOMPLISH INDICATED CONTROL FUNCTIONS.
C. UNIT CONTROLS: SOLID-STATE CONTROL BOARD AND COMPONENTS WITH FIELD-ADJUSTABLE CONTROL PARAMETERS.
D. SUPPLY-FAN CONTROL: UNITS SHALL BE ELECTRICALLY INTERLOCKED WITH CORRESPONDING EXHAUST FANS, TO OPERATE CONTINUOUSLY WHEN EXHAUST FANS ARE RUNNING. TIME CLOCK SHALL SWITCH OPERATION FROM OCCUPIED TO UNOCCUPIED. NIGHT SETBACK THERMOSTAT SHALL CYCLE FAN DURING UNOCCUPIED PERIODS TO MAINTAIN SPACE TEMPERATURE.

1. TIMER: SEVEN-DAY ELECTRONIC CLOCK.

E. ELECTRICALLY INTERLOCK KITCHEN HOOD FIRE-EXTINGUISHING SYSTEM TO DE-ENERGIZE REPLACEMENT-AIR UNIT WHEN FIRE-EXTINGUISHING SYSTEM DISCHARGES.
F. MINIMUM REFRIGERATION SYSTEM CONTROLS SHALL CONSIST OF A WALL-MOUNTING, RELATIVE-HUMIDITY AND TEMPURATURE SENSOR THAT ENERGIZES DEHUMIDIFIER OPERATION WHEN RELATIVE HUMIDITY IS MORE THAN 60 PERCENT.

PIPING:

CONDENSATE DRAINS:

CONDENSATE PIPE TO BE TYPE L OR PVC. ROUTE TO DRYWELL OR AS INDICATED ON PLANS. COORDINATE WITH PLUMBER TO PROVIDE HUB DRAIN(S) IN MECHANICAL ROOM AND DRYWELL(S). HVAC CONTRACTOR TO PROVIDE P-TRAP AT UNIT SIZED FOR 2" GREATER THAN UNIT STATIC PRESSURE. PROVIDE CLEANOUT AT UNIT FOR SUSPENDED HORIZONTAL AIR HANDLERS. INSULATE CONDENSATE PIPE WITH 1/2" ARMAFLEX (OR EQUAL) INSULATION RATED FOR PLENUM APPLICATION. CONDENSATE DRAIN LINE SHALL BE NOT LESS THAN THE EQUIPMENT DRAIN LINE SIZE AND IN NO CASE LESS THAN 3/4" PIPE SIZE.

REFRIGERANT PIPING:

COVER ALL EXPOSED LIQUID LINES AND ALL SUCTION PIPING (INDOORS AND OUTDOORS), FITTINGS, VALVES, ETC., CONTINUOUS THROUGH SLEEVES, HANGERS, ETC., WITH 1/2" FR/ARMAFLEX. INSTALLATION SHALL BE CONDENSATION FREE AND INSTALLED ACCORDING TO MANUFACTURER'S RECOMMENDATIONS.

REFRIGERANT PIPING BELOW GRADE SHALL BE ROUTED THROUGH MINIMUM 4" DIAMETER PVC PIPE SLEEVES TO EACH CONDENSING UNIT. ALL UNDERGROUND REFRIGERANT PIPING SHALL BE CONTINUOUS WITH NO UNDERGROUND JOINTS ALLOWED. REFRIGERANT PIPE SIZES SHALL BE SIZED PER A/C EQUIPMENT MANUFACTURER'S RECOMMENDATION BASED ON LENGTH OF RUN BETWEEN CONDENSING UNITS AND AHU UNITS.

PIPING ROUTED ALONG BUILDING EXTERIOR WALL SHALL BE PROTECTED BY SHEET METAL HOUSING SECURELY ATTACHED TO WALL AT 8'-0" INTERVALS AND PAINTED TO MATCH BUILDING EXTERIOR.

TRAP OIL IN SUCTION LINE AT EVAPORATOR COIL. NO OTHER COIL TRAPS PERMITTED. PROVIDE SUCTION RISERS, CHECK VALVES, SOLENOID VALVES, OR OTHER DEVICES REQUIRED IN PIPING SYSTEM BY MANUFACTURER'S INSTALLATION INSTRUCTIONS.

PIPE HANGERS AND SUPPORTS:
PIPE HANGERS, WHERE NEEDED, SHALL BE GRINNEL #260 CLEVIS TYPE, 5'-0" ON CENTER, SECURELY ATTACHED TO BUILDING CONSTRUCTION. SPACE AT MIN. 5'-0" INTERVALS.

PIPE SUPPORT:
ATTACH LINES SECURELY ALONG PAD/FLOOR/EQUIPMENT/STRUCTURE TO PREVENT MOVEMENT. SUPPORT IN A MANNER THAT LINES DO NOT HANG FROM EVAPORATOR CONNECTIONS OR BLOCK ACCESS TO FILTERS, CONTROLS, ETC.

SUPPORT AT MIN. 8'-0" INTERVALS FOR VERTICAL PIPES, 5'-0" FOR SUSPENDED HORIZONTAL PIPING.

EXHAUST FANS:

FURNISH EXHAUST FANS WITH PERFORMANCE AND CAPACITIES AS LISTED ON THE DESIGN DRAWINGS.

SUSPENDED FANS SHALL BE SUPPORTED FROM A TRAPEZE TYPE HANGER WITH SPRING MOUNTED VIBRATION ISOLATORS.

ALL EXHAUST FANS SHALL COME WITH INTEGRAL BACKDRAFT DAMPER.

COORDINATE WITH ARCHITECT TO LOCATE EXHAUST FANS, EXHAUST GRILLES, WALL OR ROOF CAPS A MINIMUM DISTANCE OF 10'-0" FROM ANY OPERABLE WINDOW, DOOR OR FRESH AIR INTAKE.

AIR DISTRIBUTION EQUIPMENT:

FURNISH SUPPLY AIR GRILLES AND RETURN AIR REGISTERS WITH OPPOSED BLADE BALANCING DAMPERS AS SCHEDULED ON THE DESIGN DRAWINGS.

GRILLES, REGISTERS, AND CEILING DIFFUSERS SHALL BE FURNISHED AS SCHEDULED ON THE DESIGN DRAWINGS AND SHALL BE ALL ALUMINUM CONSTRUCTION UNLESS NOTED OTHERWISE. AIR DISTRIBUTION SHALL NOT EXCEED NC-30 NOISE CRITERIA AS DEFINED IN THE LATEST ASHRAE GUIDE.

DUCTWORK:

1. ALL DUCTWORK DIMENSIONS ARE INSIDE NET FREE AREA.
2. SEAL ALL JOINTS WITH GLASS-FAB AND MASTIC.
3. ALL DUCTWORK SHOWN PER PLAN IS TO BE SHEET METAL. FIBERGLASS DUCT BOARD IS NOT TO BE INSTALLED UNLESS SPECIFICALLY AUTHORIZED BY THE BUILDING LANDLORD, PROJECT OWNER/AGENT AND MECHANICAL ENGINEER OF RECORD.
4. ALL EXHAUST AND OUTSIDE AIR DUCTWORK IS TO BE SHEET METAL - NO EXCEPTIONS. ADJUSTABLE SPLITTERS AND DAMPERS SHALL BE SUPPLIED AND INSTALLED IN EVERY SPLIT AND BRANCH DUCT AND SHALL BE PROVIDED WITH LOCKING QUADRANTS ON EXPOSED OR IN ACCESSIBLE AREAS OF THE DUCT FOR EASE OF OPERATION. ACCESS PANELS OR YOUNG REGULATORS SHALL BE PROVIDED WHERE DAMPERS ARE INSTALLED ABOVE HARD CEILINGS OR IN SOFFITS EVEN IF NOT STATED ON PLANS.ELBOWS OR CHANGES IN DUCT DIRECTION GREATER THAN 45 DEGREES SHALL BE FITTED WITH AIR TURNS CONSISTING OF CURVED AIRFOIL BLADES OR VANES WHICH WILL PERMIT THE AIR TO MAKE ABRUPT TURNS WITHOUT APPRECIABLE TURBULENCE.
5. ELBOWS OR CHANGES IN DUCT DIRECTION GREATER THAN 45 DEGREES SHALL BE FITTED WITH AIR TURNS CONSISTING OF CURVED AIRFOIL BLADES OR VANES WHICH WILL PERMIT THE AIR TO MAKE ABRUPT TURNS WITHOUT APPRECIABLE TURBULENCE. LONG RADIUS TURNS ARE AN ACCEPTABLE SUBSTITUTE IF SPACE PERMITS.

- SHEET METAL DUCTWORK: SHALL BE CONSTRUCTED PER THE APPROPRIATE SMACNA DESIGN STANDARDS, MEETING THE MINIMUM GAUGE SHEET METAL THICKNESS SPECIFIED. INSULATE INTERNALLY OR EXTERNALLY WITH FIBERGLASS INSULATION TO ACHIEVE A MINIMUM R-VALUE OF 7.0 UNLESS INSTALLED IN A MECHANICALLY COOLED SPACE OR BETWEEN COOLED FLOORS IN A CAVITY WHOSE EXTERIOR WALLS ARE INSULATED, IN WHICH CASE THE R-VALUE MAY BE 4.2.

- FIBERGLASS DUCTWORK: SHALL BE CONSTRUCTED OF FIBERGLASS FIBERBOARD DUCTWORK TO BE A MINIMUM OF 1" THICK. FIBERGLASS DUCTWORK SHALL BE LINED WITH ANTI MICROBIAL INSULATION EQUAL TO JOHNS-MANVILLE SUPERDUCT. INSULATE FIBERGLASS SUPPLY AND RETURN DUCTS TO A MINIMUM R-VALUE OF 7.0 UNLESS INSTALLED IN A MECHANICALLY COOLED SPACE OR BETWEEN COOLED FLOORS IN A CAVITY WHOSE EXTERIOR WALLS ARE INSULATED, IN WHICH CASE THE R-VALUE MAY BE 4.2.

- FLEXIBLE DUCTWORK SHALL BE SPIRAL FORMED OUT OF 3003 BRIGHT REFLECTIVE FINISHED ALUMINUM ALLOY, MECHANICALLY LOCKED AND HAVE A MINIMUM R-VALUE OF 6.0. IT SHALL BE UL LISTED UNDER CLASS 1 AIR DUCTS AND CLASS 1 CONNECTORS, MEET ALL REQUIREMENTS OF UL 181 AND COMPLY WITH NFPA 90A AND NFPA 90B.

- ROUND SPIRAL DUCTWORK: SHALL BE CONSTRUCTED PER THE APPROPRIATE SMACNA DESIGN STANDARDS, MEETING THE MINIMUM GAUGE SHEET METAL THICKNESS SPECIFIED AND SHALL BE A MINIMUM 1" DOUBLE WALL INTERNALLY INSULATED. NON INSULATED SPIRAL DUCTWORK WILL NOT BE ACCEPTED AS A SUBSTITUTION.

VIBRATION ISOLATION:

ALL BLOWER UNITS AND VIBRATING TYPE EQUIPMENT SHALL BE PROPERLY FITTED WITH MASON INDUSTRIES VIBRATION ISOLATION EQUIPMENT SIZED IN ACCORDANCE WITH EQUIPMENT WEIGHT AND DUTY.

PROVIDE FLEXIBLE CONNECTORS AT ALL SUPPLY AND RETURN CONNECTIONS TO AIR HANDLING EQUIPMENT CONSISTING OF HEAVY CANVAS OR NEOPRENE FABRIC WITH AIRTIGHT SEAMS AND CONNECTIONS TO THE EQUIPMENT.

AIR FILTERS:

FILTERS SHALL BE 1" FIBERGLASS MEDIA THROW AWAY TYPE IN A RIGID FRAME WITH A SUPPORTING MAZE ACROSS BOTH ENTERING AND LEAVING SURFACES. SUPPLY ONE COMPLETE SET OF FILTERS AFTER OWNER'S FINAL ACCEPTANCE. FARR 30/30 OR EQUAL.

HEAT PUMP UNIT INSTALLATION:

PROVIDE CONCRETE PADS FOR GRADE MOUNTED CONDENSING UNITS. PADS SHALL BE A MINIMUM OF 4" THICK, 3,000 PSI CONCRETE, AND SHALL BE 4" LARGER ON EACH SIDE THAN THE FOOTPRINT OF THE CONDENSING UNIT. VERIFY UNIT DIMENSIONS WITH APPROVED SHOP DRAWINGS PRIOR TO FABRICATION OF PADS.

SUSPENDED UNITS SHALL BE SUPPORTED IN APPROVED MANNER AND IN ACCORDANCE WITH AIR HANDLING UNIT SUPPORT DETAIL. PROVIDE AUXILIARY OVERFLOW DRAIN PAN WITH FLOAT SWITCH WHERE REQUIRED.

ALL AIR HANDLING UNITS AND CONDENSING UNITS SHALL BE INSTALLED WITH MANUFACTURER REQUIRED MINIMUM MAINTENANCE CLEARANCES. PROVIDE MAN SIZED ACCESS PANEL WHERE REQUIRED.

FIRE DAMPERS:

FIRE DAMPERS SHALL BE TYPE "B" CURTAIN TYPE, SUITABLE FOR EITHER VERTICAL OR HORIZONTAL INSTALLATION WITH 20 GAUGE STEEL CHANNEL FRAMES, 24 GAUGE STEEL BLADES, AND 18 GAUGE STEEL ENCLOSURE WITH DUCT COLLARS. ALL PARTS GALVANIZED MILL FINISH.

FIRE DAMPERS SHALL BE EQUAL TO RUSKIN TYPE 1BD2 FOR WALLS UP TO 2 HOUR.

INSTALL IN ACCORDANCE WITH NFPA-90A, TESTED IN ACCORDANCE WITH UL SAFETY STANDARD 555, 1-1/2 HOUR AND 4 HOUR PROTECTION, AND 165°F FUSIBLE LINK.

LAKE COUNTY BUILDING SERVICES
Any errors or omissions in these plans shall be made to conform with the applicable code requirements per Florida Building Code, in accordance with Section 107. Plans were reviewed for code compliance and shall be kept on job site.

RECEIVED FEB 14 2019

PERMIT REVIEW STAMP

ISSUE HISTORY

No.	Date	Description
1	02/08/2019	ISSUE FOR PERMIT

REVISION HISTORY

No.	Date	Description

FUGLEBERG KOCH
2555 Temple Trail, Winter Park, FL 32789 (407) 629-0595
www.fuglebergkoch.com BR569

CONSULTANT

Joseph, Lawrence & Co
Consulting Engineers
1180 HARWOOD AVE. SUITE 3000
ALTAMONTE SPRINGS, FLORIDA 32714
TEL. 321.972.4466
WWW.JLCENG.COM
CA NO. 28730

JLC 17.0137.00

STATE OF FLORIDA JOHN J. BARNEY LICENSE No. 69124 PROFESSIONAL ENGINEER

Adam Joseph Barney
P.E. #:69124

SUMMER BAY APTS. II
LAKE COUNTY, FL

Drawn:	MJR/KCM
Checked:	BLS/AJB
Approval:	BLS/AJB
Date:	02/08/2019
Project #:	5389

SPECIFICATIONS - MECHANICAL

M8.01

These documents and their contents are the property of FUGLEBERG KOCH, P.A.© - M08000926, and are issued only for the specific project listed on these drawings. Any reproduction, revision or modification of these documents without the expressed written consent of Fugleberg Koch, P.A.© is prohibited by law.

LEGEND

WIRING AND POWER

- S. — SWITCH
  - (NONE) SINGLE POLE TOGGLE SWITCH
  - 2 TWO POLE TOGGLE SWITCH
  - 3 THREE WAY TOGGLE SWITCH
  - WP SINGLE POLE WEATHERPROOF SWITCH
  - K SINGLE POLE KEYED SWITCH
  - OS OCCUPANCY SENSOR SWITCH
- S abc — LOWER CASE LETTERS INDICATES SWITCHING DESIGNATIONS, QUANTITY OF LETTERS EQUAL QUANTITY OF GANGED SWITCHES
- ⏚. — SINGLE RECEPTACLE
  - GFI GROUND FAULT CIRCUIT INTERRUPTER
  - WP WEATHERPROOF
  - IG ISOLATED GROUND
  - C COUNTER HEIGHT (ABOVE COUNTER OR 42" AFF)
- ⏚. — DUPLEX RECEPTACLE
  - GFI GROUND FAULT CIRCUIT INTERRUPTER
  - WP WEATHERPROOF
  - IG ISOLATED GROUND
  - C COUNTER HEIGHT (ABOVE COUNTER OR 42" AFF)
  - EWC ELECTRIC WATER COOLER, COORDINATE LOCATION WITH PLUMBING CONTRACTOR
- ⏚. — QUADRAPLEX RECEPTACLE
  - GFI GROUND FAULT CIRCUIT INTERRUPTER
  - WP WEATHERPROOF
  - IG ISOLATED GROUND
  - C COUNTER HEIGHT (ABOVE COUNTER OR 42" AFF)
- ⏚. — SPECIAL RECEPTACLE
  - X TYPE X (SEE RECEPTACLE SCHEDULE)
  - C COUNTER HEIGHT
- PP — POWER POLE
- RECESSED FLOOR MOUNTED DUPLEX RECEPTACLE
- SURFACE-MOUNTED FLOOR DUPLEX RECEPTACLE
- CEILING-MOUNTED DUPLEX RECEPTACLE
- PLUG MOLD
  - C COUNTER HEIGHT
- J — JUNCTION BOX
- DISCONNECT SWITCH
- WP — DISCONNECT SWITCH - WEATHERPROOF (NEMA 3R)
- F — FUSED DISCONNECT SWITCH
- MAGNETIC MOTOR STARTER
- COMBINATION FUSED DISCONNECT/ MAGNETIC STARTER SWITCH
  - HOA HAND/OFF/AUTO
  - SS START/STOP
- M — MANUAL STARTER
- VSD — COMBINATION VARIABLE SPEED DRIVE AND DISCONNECT
- VSD — VARIABLE SPEED DRIVE
- EF-1 — MOTOR WITH DESIGNATOR
- TC — TIME CLOCK
- WH — WATER HEATER
- HVP1-6 — BRANCH CIRCUIT HOME RUN WITH PANEL NAME AND CIRCUIT NUMBER, QUANTITY OF ARROWHEADS DENOTES QUANTITY OF BRANCH CIRCUITS
- BRANCH CIRCUIT WIRING, PROVIDE QUANTITIES OF CONDUCTORS REQUIRED FOR CIRCUITING AND SWITCHING INDICATED
- POWER LEG ONLY (NO SWITCH LEG BETWEEN ROOMS)
- MUSHROOM HEAD PUSH BUTTON (EMERGENCY STOP)
- R — RELAY
- GROUND ROD
- T — TRANSFORMER
- T K — TYPE "K" TRANSFORMER
- UH — ELECTRIC UNIT HEATER (FURNISHED UNDER DIV 15 UNLESS NOTED OTHERWISE)

PANELS

- XXX — NEW ELECTRICAL PANEL
  - MDP MAIN DISTRIBUTION PANEL (SEE PANEL SCHEDULE)
  - TVSS TRANSIENT VOLTAGE SURGE SUPPRESSION
- ATS — AUTOMATIC TRANSFER SWITCH
- XXX — ELECTRICAL SYSTEMS PANEL
  - SACP SECURITY ALARM CONTROL PANEL
  - FACP FIRE ALARM CONTROL PANEL
  - MC MASTER CLOCK CONTROL PANEL
  - PA PUBLIC ADDRESS CONTROL PANEL
  - FAAP FIRE ALARM ANNUNCIATOR PANEL

LIGHTING

- XX — LIGHTING FIXTURE (SEE LIGHTING FIXTURE SCHEDULE FOR LETTER DESIGNATION AND DESCRIPTION OF FIXTURES)
- EMERGENCY/NIGHT LIGHT LIGHTING FIXTURE
- EXIT LIGHTING FIXTURE UNIVERSAL MOUNT, SINGLE/DOUBLE FACE (WHERE USED, ARROW INDICATES CHEVRON DIRECTION)
- BATTERY POWERED EMERGENCY LIGHT
- EMERGENCY LIGHT REMOTE HEAD
- TK — TRACK LIGHTING
- TRACK LIGHTING HEAD
- WG — WIRE CAGE LIGHT GUARD
- OS — OCCUPANCY SENSOR - CEILING MOUNTED
- OSC — OCCUPANCY SENSOR - CEILING MOUNTED - CORRIDOR
- OSW — OCCUPANCY SENSOR - WALL MOUNTED
- LC — LIGHTING CONTACTOR
- PC — PHOTOCELL
- S. — SWITCH
  - OS OCCUPANCY SENSOR SWITCH
  - D DIMMER
  - D3 THREE WAY DIMMER (INCANDESCENT)

TELECOM/SYSTEMS

- DATA/COMM OUTLET
- TV — TELVISION OUTLET
- SPEAKER
- V — VOLUME CONTROL
- CAMERA
- TELEPHONE OUTLET

FIRE ALARM SYSTEM

- S — SMOKE DETECTOR
- S CO — SMOKE/CARBON MONOXIDE DETECTOR

NOTE:

SYMBOLS SHOWN ON THIS ELECTRICAL LEGEND ARE FOR REFERENCE PURPOSES ONLY. ALL OF THESE SYMBOLS MAY NOT BE USED FOR THIS PROJECT.

ABBREVIATIONS

A	–	AMPERES
A/C	–	AIR CONDITIONING
AC	–	ALTERNATING CURRENT
AFF	–	ABOVE FINISHED FLOOR
AFG	–	ABOVE FINISHED GRADE
AHU	–	AIR HANDLING UNIT
AWG	–	AMERICAN WIRE GAUGE
C	–	CONDUIT
CFL	–	COMPACT FLUORESCENT LAMP
CH	–	COUNTER HEIGHT
CONC	–	CONCRETE
COND	–	CONDUIT
CU	–	COPPER
DISC	–	DISCONNECT
ECB	–	ENCLOSED CIRCUIT BREAKER
ELEC	–	ELECTRICAL
EM	–	EMERGENCY
EMS	–	ENERGY MANAGEMENT SYSTEM
EMT	–	ELECTRICAL METALLIC TUBING
EF	–	EXHAUST FAN
EWC	–	ELECTRIC WATER COOLER
ETR	–	EXISTING TO REMAIN
EX	–	EXISTING
FA	–	FIRE ALARM
FACP	–	FIRE ALARM CONTROL PANEL
FPL	–	FLORIDA POWER AND LIGHT
G	–	GROUND
GFI	–	GROUND FAULT INTERRUPTER
GND	–	GROUND
GRC	–	GALVANIZED RIGID CONDUIT
H.I.D.	–	HIGH INTENSITY DISCHARGE
HVAC	–	HEATING, VENTILATING AND AIR CONDITIONING
I.G.	–	ISOLATED GROUND
J	–	JUNCTION
KAIC	–	(THOUSAND) AMPERE INTERRUPTING CAPACITY
KVA	–	KILOVOLT-AMPERES
KW	–	KILOWATT
LTG	–	LIGHTING
MCM	–	THOUSANDS OF CIRCULAR MILS
MCU	–	MASTER CONTROL UNIT
MCP	–	MOTOR CIRCUIT PROTECTION
MH	–	METAL HALIDE
N	–	NEUTRAL
NA	–	NOT APPLICABLE
NF	–	NON-FUSED
NL	–	NIGHT LIGHT
NEC	–	NATIONAL ELECTRICAL CODE
NEMA	–	NATIONAL ELECTRICAL MANUFACTURERS ASSOCIATION
NFPA	–	NATIONAL FIRE PROTECTION ASSOCIATION
NIC	–	NOT IN CONTRACT
O.C.	–	ON CENTER
O.F.C.I.	–	OWNER FURNISHED CONTRACTOR INSTALLED
P	–	POLE
PNL	–	PANELBOARD
PVC	–	POLYVINYL CHLORIDE
RM	–	ROOM
RGS	–	RIGID GALVANIZED STEEL
SPEC	–	SPECIFICATION
SS	–	STAINLESS STEEL
TVSS	–	TRANSIENT VOLTAGE SURGE SUPPRESSION
TYP	–	TYPICAL
UON	–	UNLESS OTHERWISE NOTED
V	–	VOLTS
W	–	WIRE
WP	–	WEATHERPROOF

GENERAL NOTES

1) ALL WORK SHALL BE DONE IN ACCORDANCE WITH THE LATEST EDITION OF THE NATIONAL ELECTRICAL CODE (NFPA 70), AND STATE OF FLORIDA.

2) CONTRACTOR SHALL FIELD VERIFY ALL CONDITIONS AND COORDINATE WITH EXISTING EQUIPMENT PRIOR TO BIDDING.

3) ALL ELECTRICAL MATERIALS, DEVICES, APPLIANCES, AND EQUIPMENT SHALL BE LABEL LISTED BY AN APPROVED THIRD-PARTY TESTING AGENCY.

BUILDING:

4) INSTALLATION HEIGHT OF EQUIPMENT (TO CENTERLINE) ABOVE FINISHED FLOOR UNLESS NOTED OTHERWISE SHALL BE:

   RECEPTACLE = 18"
   CLOCK = 7'-6"
   SWITCH = 44"
   MODULAR JACK FOR WALL MOUNTED TELEPHONE = 52"
   MODULAR TELEPHONE JACK = 18"
   AUDIO/VISUAL FIRE ALARM INDICATORS = 80"
   FIRE ALARM PULL STATIONS = 50"
   TELEVISION OUTLET = 18"
   COMPUTER OUTLET = 18"
   CALL SWITCH = 44"
   REMOTE TEST STATION FOR DUCT DETECTOR = 52"
   C = ABOVE COUNTER BACKSPLASH, COORDINATE WITH ARCHITECTURAL ELEVATIONS AND MILLWORK.

5) ALL WIRING SHALL BE CONCEALED IN WALLS OR ABOVE CEILINGS UNLESS NOTED OTHERWISE OR APPROVED BY THE ARCHITECT/ENGINEER. ALL DEVICE OUTLET BOXES SHALL BE RECESSED UNLESS NOTED OTHERWISE OR APPROVED BY THE ARCHITECT/ENGINEER.

6) ALL CONDUIT ROUTES SHOWN ARE APPROXIMATE ONLY. CONTRACTOR SHALL FIELD VERIFY FINAL ROUTE.

7) CONDUIT RUNS SHOWN ARE SCHEMATIC AND DO NOT INDICATE THE NECESSARY FITTINGS AND JUNCTION BOXES THAT ARE INCLUDED IN THE SCOPE OF THE WORK.

8) CONTRACTOR SHALL PERMANENTLY IDENTIFY ALL WIRING WITH THE SOURCE AND CIRCUIT AT ALL ELECTRICAL EQUIPMENT, PULL AND JUNCTION BOXES AND ELECTRICAL TERMINATIONS PROVIDED OR ASSOCIATED WITH THIS CONSTRUCTION.

GROUNDING:

9) ALL METAL RACEWAYS, INCLUDING CONDUIT, WIRE TROUGHS, WIREMOLD, ETC., SHALL BE GROUNDED. ALL CONNECTIONS IN METAL RACEWAYS SHALL BE COMPLETED IN SUCH A MANNER AS TO MAINTAIN A CONTINUOUS PATH TO GROUND THROUGHOUT THE ENTIRE LENGTH OF THE RACEWAY.

WIRING:

10) UNLESS NOTED OTHERWISE ON THE DRAWINGS OR ON THE EQUIPMENT WIRING SCHEDULE, EACH BRANCH CIRCUIT HOME RUN SHALL BE THREE (3) #12 AWG THHN/THWN (1 HOT, 1 NEUTRAL & 1 EQUIPMENT GROUND) IN 3/4" EMT CONDUIT. PROTECT EACH CIRCUIT WITH A 20 AMPERE, 1-POLE OVERCURRENT DEVICE UNLESS NOTED OTHERWISE. COMBINED NEUTRALS ARE NOT PERMITTED.

11) THE USE OF ELECTRICAL 'NM' CABLE WIRING IS ACCEPTABLE WHERE ALLOWED BY CODE AND THE AUTHORITY HAVING JURISDICTION.

GENERAL:

12) REFER TO ARCHITECTURAL DRAWINGS FOR ALL FIRE PENETRATION DETAILS AND REQUIREMENTS.

LAKE COUNTY BUILDING SERVICES
Any errors or omissions in these plans shall be made to conform with the applicable code requirements per Florida Building Code, in accordance with Section 107. Plans were reviewed for code compliance and shall be kept on job site.

RECEIVED FEB 14 2019

PERMIT REVIEW STAMP

ISSUE HISTORY

No.	Date	Description
1	02/08/2019	ISSUE FOR PERMIT

REVISION HISTORY

No.	Date	Description

© 2019 These documents are and shall remain the property of FUGLEBERG KOCH, PLLC. Unpublished rights reserved under the Copyright Laws of the United States. These documents are not to be used in whole or part for any purpose without the written consent of Fugleberg Koch, PLLC. Unauthorized use of these documents, whether or not modifications of these documents are made, is prohibited by law. These documents are to be used only for the specific project and for those drawings. Any reproductions, revisions, or modifications of these documents without the expressed written consent of Fugleberg Koch, PLLC is prohibited by law.

FUGLEBERG KOCH
2555 Temple Trail, Winter Park, FL 32789 (407) 629-0595
www.fuglebergkoch.com BR569

CONSULTANT

Joseph, Lawrence & Co
Consulting Engineers
1180 HARWOOD AVE. SUITE 3000
ALTAMONTE SPRINGS, FLORIDA 32714
TEL: 321.972.4466
WWW.JLCENG.COM
CA NO. 28730

JLC 17.0127.00

BLAKE L. SUDDETH
LICENSED
No. 69060
STATE OF FLORIDA
PROFESSIONAL ENGINEER

Blake Lawrence Suddeth
P.E. #: 69060

Drawn:	MJR/KCM
Checked:	BLS/AJB
Approval:	BLS/AJB
Date:	02/08/2019
Project #:	5389

SUMMER BAY APTS. II
LAKE COUNTY, FL

SYMBOL LEGEND AND GENERAL NOTES

E0.01

LEGEND

- X — BUILDING ID NUMBER
- Y Z — NUMBER OF UNITS PER BUILDING
- BUILDING TYPE

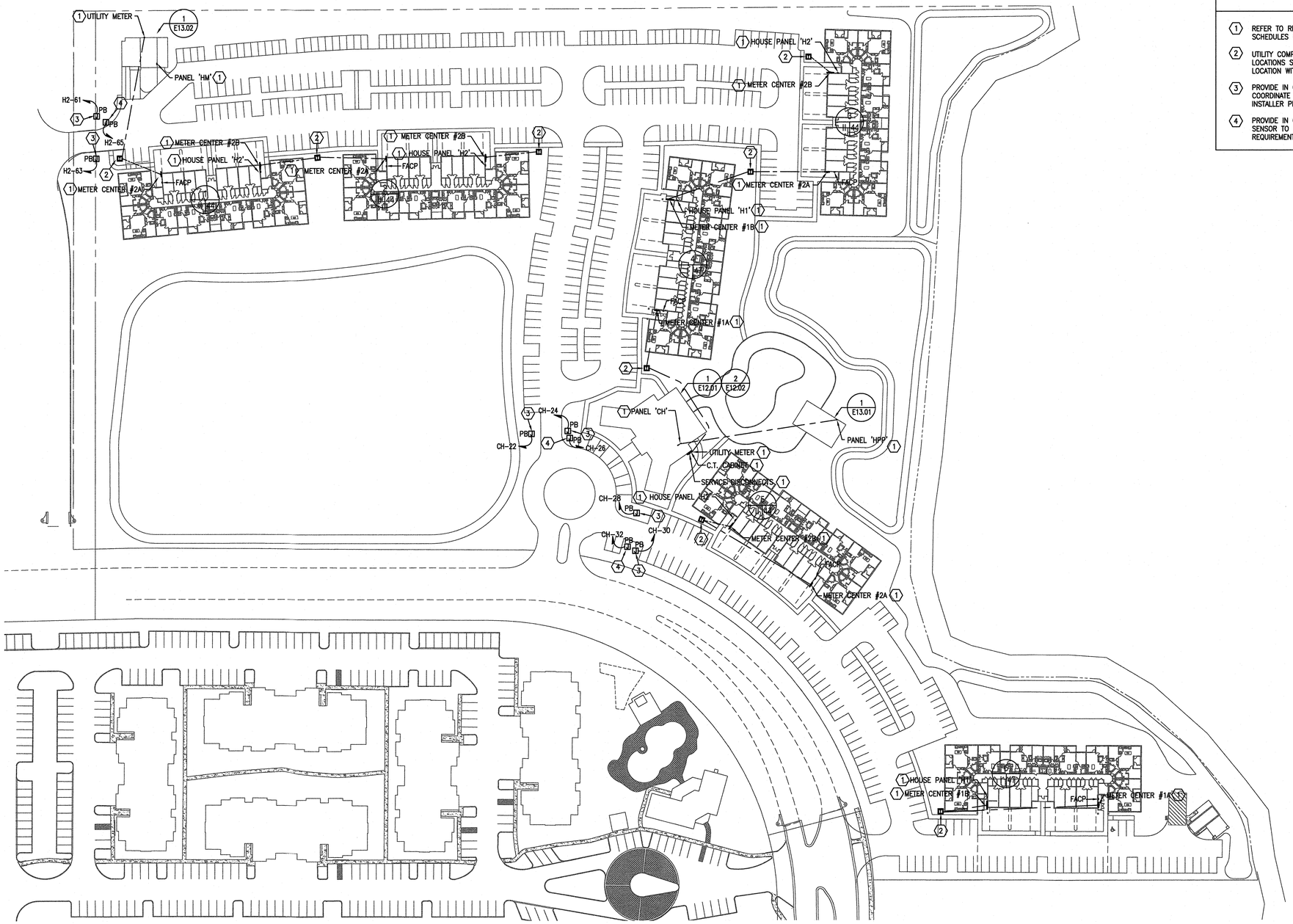

H1 SITE PLAN - ELECTRICAL
1" = 60'-0"

GENERAL NOTES:

A. DO NOT SCALE ELECTRICAL DRAWING FOR ANY DIMENSIONS.

B. ALL WORK SHALL COMPLY WITH THE 2014 NATIONAL ELECTRIC CODE, NATIONAL, STATE AND LOCAL CODES. PROVIDE GROUNDING AND BONDING PER NEC 250.

C. SEE SINGLE LINE DIAGRAM FOR FEEDER WIRE AND CONDUIT SIZE. ALL CIRCUITS NOT SIZED ON DRAWING SHALL BE INSTALLED TO MEET MINIMUM SIZE REQUIRED BY NEC. ALL CONDUCTORS SHALL HAVE AN EQUIPMENT GROUND WIRE SIZED PER NEC.

D. FIELD VERIFY EXACT LOCATION OF ALL DEVICES AND EQUIPMENT PRIOR TO ROUGH IN.

REFERENCE NOTES: (X)

1. REFER TO RESPECTIVE FLOOR PLANS, POWER RISER DIAGRAMS AND PANEL SCHEDULES FOR ADDITIONAL SERVICE INFORMATION.
2. UTILITY COMPANY TRANSFORMER; 120/208V, 3ø SECONDARY. TRANSFORMER LOCATIONS SHOWN IS PRELIMINARY. ELECTRICAL CONTRACTOR SHALL VERIFY EXACT LOCATION WITH LOCAL UTILITY COMPANY PRIOR TO ROUGH-IN.
3. PROVIDE IN GROUND WEATHERPROOF PULL BOX FOR CONNECTION OF GATE MOTOR. COORDINATE LOCATION AND CONNECTION REQUIREMENTS OF GATE MOTOR WITH GATE INSTALLER PRIOR TO ROUGH-IN AND PROVIDE AS REQUIRED.
4. PROVIDE IN GROUND WEATHERPROOF PULL BOX AND CONDUIT TO CONNECT GATE SENSOR TO GATE CONTROLLER. COORDINATE LOCATION AND CONNECTION REQUIREMENTS WITH GATE INSTALLER PRIOR TO ROUGH-IN.

LAKE COUNTY BUILDING SERVICES
Any errors or omissions in these plans shall be made to conform with the applicable code requirements per Florida Building Code, in accordance with Section 107. Plans were reviewed for code compliance and shall be kept on job site.

RECEIVED FEB 14 2019

PERMIT REVIEW STAMP

ISSUE HISTORY

No.	Date	Description
1	02/08/2019	ISSUE FOR PERMIT

REVISION HISTORY

No.	Date	Description

© 2015 These documents and their contents are the property of FUGLEBERG KOCH, PLLC - AA26002103, and are issued only for the specific project noted on these drawings. Any reproductions, revisions, or modifications of these documents without the expressed written consent of Fugleberg Koch, PLLC is prohibited by law.

FUGLEBERG KOCH
2555 Temple Trail, Winter Park, FL 32789 (407) 629-0595
www.fuglebergkoch.com BR569

CONSULTANT
Joseph, Lawrence & Co
Consulting Engineers
1180 HARWOOD AVE. SUITE 3000
ALTAMONTE SPRINGS, FLORIDA 32714
TEL: 321.972.4466
WWW.JLCENG.COM
CA NO. 28730

JLC 17.0137.00

BLAKE L. SUDDETH
LICENSE
No. 69060
STATE OF FLORIDA
PROFESSIONAL ENGINEER

Blake Lawrence Suddeth
P.E. #: 69060

SUMMER BAY APTS. II
LAKE COUNTY, FL

Drawn:	MJR/KCM
Checked:	BLS/AJB
Approval:	BLS/AJB
Date:	02/08/2019
Project #:	5389

SITE PLAN - ELECTRICAL

E1.01

SITE LIGHTING FIXTURE SCHEDULE

MARK	DESCRIPTION	MANUFACTURER	MODEL	VOLTS	LAMP QTY	LAMP WATTS	LAMP MODEL	FIXTURE WATTS
SLA3	LED AREA LIGHT WITH TYPE 3 DIST., INTEGRAL DIMMING AND 4000K COLOR TEMP. MOUNTED 25'-0" AFG ON 30' DIRECT BURIAL CONCRETE POLE	PHILLIPS GARDCO	ECF-S-48L-1A-NW-G2-AR-3-UNV-CM30-BK	UNV	1	159	LED	159
SLA4HS	LED AREA LIGHT WITH TYPE 4 DIST., INTEGRAL DIMMING, HOUSE SIDE SHIELD AND 4000K COLOR TEMP. MOUNTED 25'-0" AFG ON 30' DIRECT BURIAL CONCRETE POLE	PHILLIPS GARDCO	ECF-S-48L-1A-NW-G2-AR-4-UNV-CM30-HIS-BK	UNV	1	159	LED	159
2SLA4	DUAL LED AREA LIGHT WITH TYPE 4 DIST., INTEGRAL DIMMING AND 4000K COLOR TEMP. MOUNTED 25'-0" AFG ON 30' DIRECT BURIAL CONCRETE POLE	PHILLIPS GARDCO	ECF-S-48L-1A-NW-G2-AR-4-UNV-CM30-BK	UNV	2	159	LED	318
WLA3	LED WALL MOUNTED LIGHT WITH TYPE 3 DIST. AND 4000K COLOR TEMP. MOUNTED 20'-0" AFG	PHILLIPS GARDCO	111L-16L-550-NW-G2-3-UNV-PCB-BK	UNV	1	29	LED	29

NOTES:
DIVISION 16 CONTRACTOR SHALL VERIFY ALL FIXTURE MANUFACTURERS, TYPES, OPTIONS AND FINISHES WITH OWNER/ARCHITECT/INTERIOR DESIGNER PRIOR TO ORDERING.

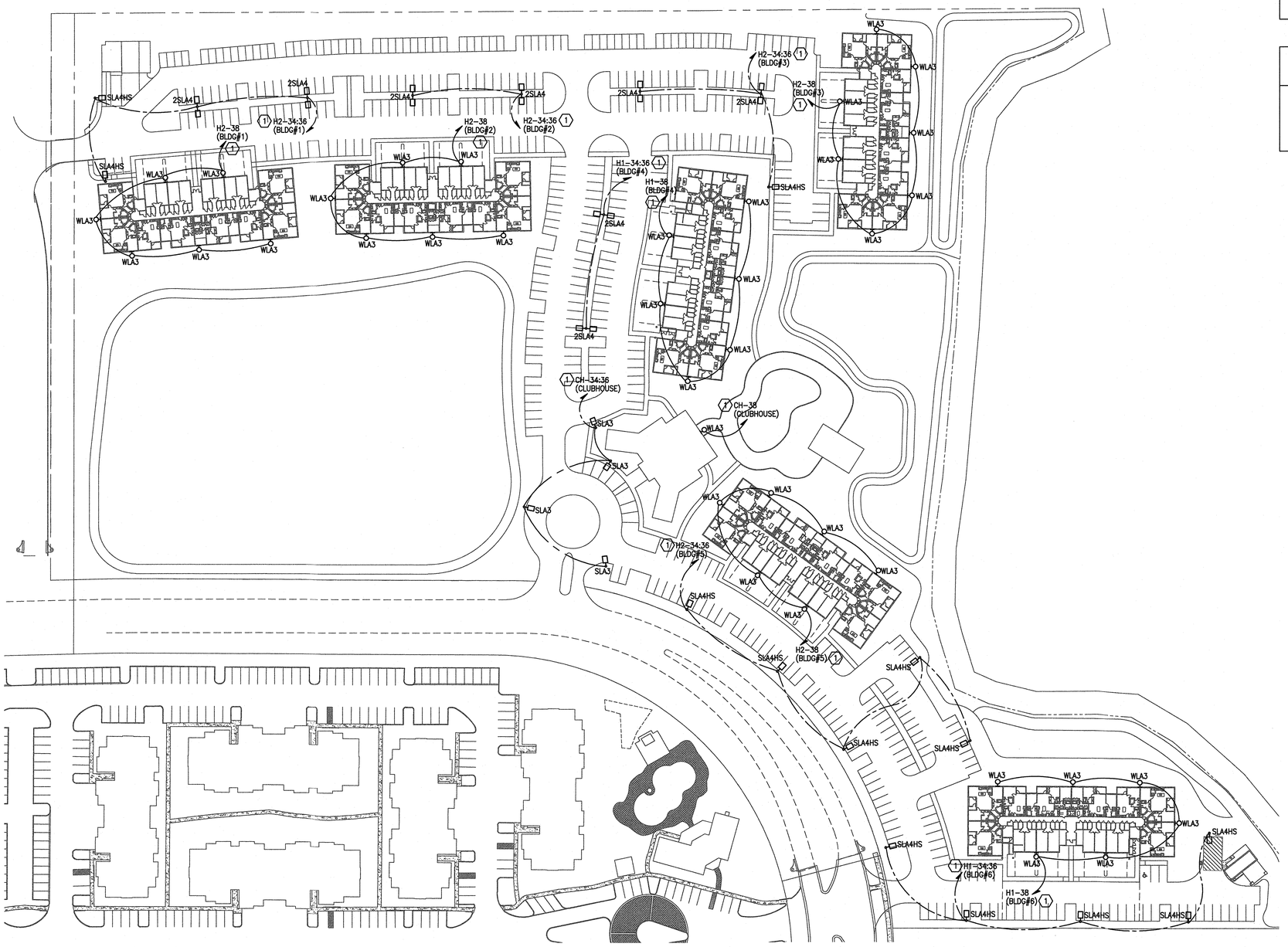

H1 SITE PLAN - LIGHTING
1" = 60'-0"

GENERAL NOTES:

A. DO NOT SCALE ELECTRICAL DRAWING FOR ANY DIMENSIONS.

B. ALL WORK SHALL COMPLY WITH THE 2014 NATIONAL ELECTRIC CODE, NATIONAL, STATE AND LOCAL CODES. PROVIDE GROUNDING AND BONDING PER NEC 250.

C. SEE SINGLE LINE DIAGRAM FOR FEEDER WIRE AND CONDUIT SIZE. ALL CIRCUITS NOT SIZED ON DRAWING SHALL BE INSTALLED TO MEET MINIMUM SIZE REQUIRED BY NEC. ALL CONDUCTORS SHALL HAVE AN EQUIPMENT GROUND WIRE SIZED PER NEC.

D. FIELD VERIFY EXACT LOCATION OF ALL DEVICES AND EQUIPMENT PRIOR TO ROUGH IN.

E. THE CONTRACTOR SHALL STAKE THE LOCATION OF ALL LIGHTS SHOWN ON THIS PLAN FOR REVIEW BY THE OWNER, OWNER'S REPRESENTATIVE AND/OR LANDSCAPE ARCHITECT PRIOR TO INSTALLATION.

F. THE CONTRACTOR SHALL ALSO BRING ANY DISCREPANCIES/CONFLICTS TO THE ATTENTION OF THE LANDSCAPE ARCHITECT.

G. NO LIGHTS SHALL BE INSTALLED IF THERE ARE OBVIOUS CONFLICTS ON SITE. CONFLICTS SHALL BE BROUGHT TO THE ATTENTION OF THE LANDSCAPE ARCHITECT FOR REVIEW.

H. ANY PROPOSED LIGHTING SUBSTITUTIONS MUST BE SUBMITTED FOR OWNER AND/OR OWNER'S REPRESENTATIVE APPROVAL PRIOR TO PURCHASE AND INSTALLATION.

I. ALL WIRING FOR TYPE 'SL#' FIXTURES SHALL BE (2)#10 AND (1)#10 GND., IN 3/4"C. MINIMUM.

REFERENCE NOTES: ⓧ

(1) ALL EXTERIOR SITE LIGHTING SHALL BE CONTROLLED BY LIGHTING CONTACTOR 'LC1' ASSOCIATED WITH THAT BUILDING'S HOUSE PANEL. REFER TO PANEL SCHEDULES FOR ADDITIONAL INFORMATION. MINIMUM 2#10 CU. AND 1#10 CU. GND. IN 3/4"C.

LAKE COUNTY BUILDING SERVICES
Any errors or omissions in these plans shall be made to conform with the applicable code requirements per Florida Building Code, in accordance with Section 107. Plans were reviewed for code compliance and shall be kept on job site.

RECEIVED FEB 14 2019

PERMIT REVIEW STAMP

ISSUE HISTORY

No.	Date	Description
1	02/08/2019	ISSUE FOR PERMIT

REVISION HISTORY

No.	Date	Description

© 2019 These documents and designs are the property of FUGLEBERG KOCH, P.L.C. (+A2B2E2015), and are issued only for the specific project noted on these drawings. Any reproductions, revisions, or modifications of these documents without the expressed written consent of Fugleberg Koch, P.L.C. is prohibited by law.

FUGLEBERG KOCH
2555 Temple Trail, Winter Park, FL 32789 (407) 629-0595
www.fuglebergkoch.com BR569

CONSULTANT
Joseph, Lawrence & Co
Consulting Engineers
1180 WADWOOD AVE. SUITE 3000
ALTAMONTE SPRINGS, FLORIDA 32714
TEL: 321.972.4466
WWW.JLCENG.COM
CA NO. 28730

JLC 17.0137.00

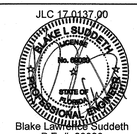

Blake Lawrence Suddeth
P.E. #: 69060

SUMMER BAY APTS. II
LAKE COUNTY, FL

Drawn:	MJR/KCM
Checked:	BLS/AJB
Approval:	BLS/AJB
Date:	02/08/2019
Project #:	5389

SITE PLAN - LIGHTING

E1.02

Luminaire Schedule						
Symbol	Qty	Label	Arrangement	Total Lamp Lumens	LLF	Description
	13	SLA4HS	SINGLE	N.A.	0.950	ECF-S-48L-1A-NW-G2-4-HIS
	4	SLA3	SINGLE	N.A.	0.950	ECF-S-48L-1A-NW-G2-3
	38	WLA3	SINGLE	N.A.	0.950	111L-16L-550-NW-G2-3
	8	2SLA4	BACK-BACK	N.A.	0.950	ECF-S-48L-1A-NW-G2-4

Calculation Summary							
Label	CalcType	Units	Avg	Max	Min	Avg/Min	Max/Min
Parking & Drive Lanes	Illuminance	Fc	1.92	7.8	0.6	3.20	13.00
Property Line	Illuminance	Fc	0.12	0.6	0.0	N.A.	N.A.

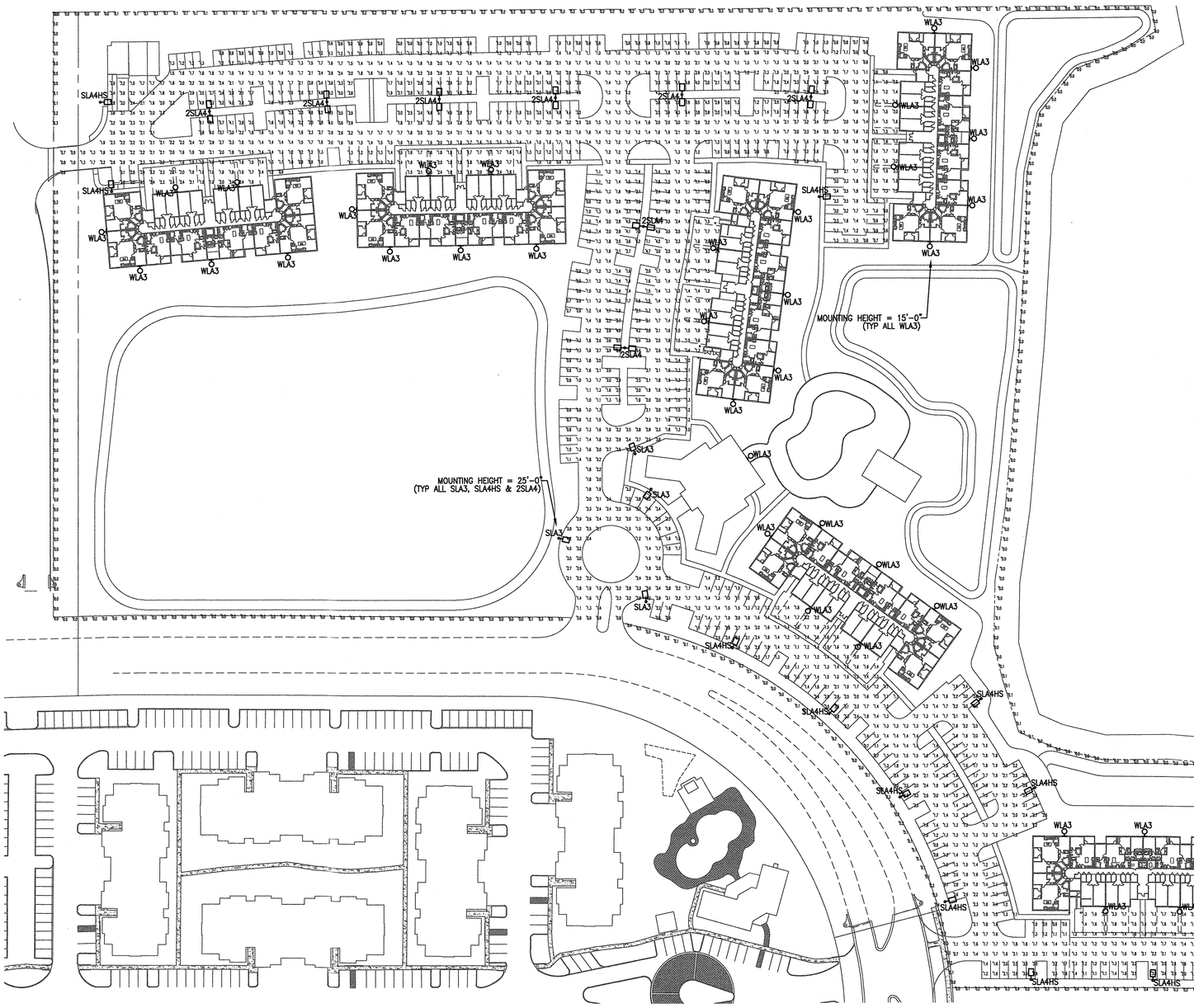

H1 SITE PLAN - PHOTOMETRICS
1" = 60'-0"

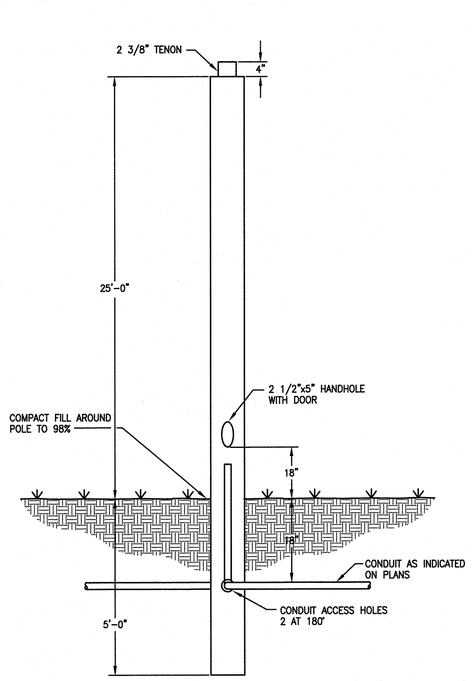

2 NTS 25FT MOUNTING HEIGHT POLE DETAIL

LAKE COUNTY BUILDING SERVICES
Any errors or omissions in these plans shall be made to conform with the applicable code requirements per Florida Building Code, in accordance with Section 107. Plans were reviewed for code compliance and shall be kept on job site.

RECEIVED FEB 14 2019

PERMIT REVIEW STAMP

ISSUE HISTORY

No.	Date	Description
1	02/08/2019	ISSUE FOR PERMIT

REVISION HISTORY

No.	Date	Description

FUGLEBERG KOCH
2555 Temple Trail, Winter Park, FL 32789 (407) 629-0595
www.fuglebergkoch.com BR569

CONSULTANT
Joseph, Lawrence & Co
Consulting Engineers
1180 HARWOOD AVE. SUITE 3000
ALTAMONTE SPRINGS, FLORIDA 32714
TEL: 321.972.4466
WWW.JLCENG.COM
CA NO. 28730

JLC 17.0137.00
BLAKE L. SUDDETH LICENSE No. 69060 STATE OF FLORIDA PROFESSIONAL ENGINEER
Blake Lawrence Suddeth
P.E. #: 69060

SUMMER BAY APTS. II	Drawn: MJR/KCM
LAKE COUNTY, FL	Checked: BLS/AJB
	Approved: BLS/AJB
	Date: 02/08/2019
	Project #: 5389
SITE PLAN PHOTOMETRICS	
E1.03	

These documents and the content are the property of FUGLEBERG KOCH, PLLC - 14200001700, and are issued only for the specific project named on these drawings. Any reproductions, revisions, or modifications of these documents without the expressed written consent of Fugleberg Koch, PLLC is prohibited by law.

PHILIPS
GARDCO

Site & Area

EcoForm

ECF-S small



Project:
Location:
Cat.No:
Type:
Qty:
Notes:

The Philips Gardco EcoForm Gen-2 combines economy with performance in an LED area luminaire. Capable of delivering up to 26,400 lumens or more in a compact, low profile LED luminaire, EcoForm offers a new level of customer value. EcoForm features an innovative retrofit arm kit, simplifying site conversions to LED by eliminating the need to drill additional holes in most existing poles. Integral control systems available for further energy savings.

Ordering guide example: ECF-S-64L-900-NW-G2-AR-5-120-HIS-MGY

Prefix	Number of LEDs	Drive Current	LED Color - Generation	Mounting	Distribution	Voltage	Options: Dimming controls	Motion sensing	Photo-sensing	Electrical	Luminaire	Finish
ECF-S	48L	1A	NW-G2	AR	3	UNV	CM30					BK
ECF-S EcoForm Site and Area, Small	32L 32 LEDs (2 modules) 48L 48 LEDs (3 modules) 64L 64 LEDs (4 modules)	530 530mA 700 700mA 1A 1050mA 1.2A 1200mA 900 900mA 1A 1050mA 1.2A 1200mA 900 900mA 1A 1050mA	WW-G2 Warm White 3000K, 70CRI Generation 2 NW-G2 Neutral White 4000K, 70CRI Generation 2 CW-G2 Cool White 5000K, 70CRI Generation 2	AR Arm Mount (standard)[9] *The following mounting kits must be ordered separately (See accessories)* SF Slip Fitter Mount[11] (fits to 2 3/8" O.D. tenon) WS Wall mount with surface conduit rear entry permitted RAM Retrofit arm mount kit[9]	**Type 2** 2 Type 2 2-90 Rotated left 90° 2-270 Rotated right 270° **Type 3** 3 Type 3 3-90 Rotated left 90° 3-270 Rotated right 270° **Type 4** 4 Type 4 4-90 Rotated left 90° 4-270 Rotated right 270° **Type 5** 5 Type 5 5W Type 5W AFR Auto Front Row AFR-90 Auto Front Row, Rotated left 90° AFR-270 Auto Front Row, Rotated right 270°	120 120V 208 208V 240 240V 277 277V 347 347V 480 480V UNV 120-277V (50/60Hz) HVU 347-480V (50/60Hz)	DD 0-10V External dimming (by others)[5] DCC Dual Circuit Control[6] FAWS Field Adjustable[14] SW Interface module for SiteWise[12,13] LLC2 Integral module with #2 lens[1,6] LLC3 Integral module with #3 lens[1,6] LLC4 Integral module with #4 lens[1,6] **DynaDimmer: Automatic Profile Dimming** CS50 Safety 50% Dimming, 7 hours[1] CM50 Median 50% Dimming, 8 hours[1] CE50 Economy 50% Dimming, 9 hours[1] DA50 All Night 50% Dimming[1] CS30 Safety 30% Dimming, 7 hours[1] CM30 Median 30% Dimming, 8 hours[1] CE30 Economy 30% Dimming, 9 hours[1] DA30 All Night 30% Dimming[1]	IMRI3 Integral with #3 lens[8] IMRI7 Integral with #7 lens[8] IMRO Pole mounted motion sensor[5] (see accessories)	PCB Photocontrol Button[2,3] TLRD5 Twist Lock Receptacle 5 Pin TLRD7 Twist Lock Receptacle 7 Pin TLRPC Twist Lock Receptacle w/ Photocell[2]	**Fusing** F1 Single (120, 277, 347VAC)[2] F2 Double (208, 240, 480VAC)[2] **Pole Mount Fusing** FP1 Single (120, 277, 347VAC)[2] FP2 Double (208, 240, 480VAC)[2] FP3 Canadian Double Pull (208, 240, 480VAC)[2] **Surge Protection** (10kA standard) SP2 Increased 20kA	Square Pole Adapter included in standard product TB Terminal Block[7] RPA Round Pole Adapter (fits to 3"- 3.9" O.D. pole)[10] HIS Internal Housing Side Shield[4]	**Textured** BK Black WH White BZ Bronze DGY Dark Gray MGY Medium Gray **Customer specified** RAL Specify optional color or RAL (ex: RAL7024) CC Custom color (Must supply color chip for required factory quote)

1. Available only on **120, 208, 240,** and **277** (or **UNV**)
2. Specify Voltage
3. Not available with **347** or **480** voltage
4. **HIS** not available with Type **5** or **5W** optics
5. **DD** is required for **LLCR** and pole mount motion sensor. Dimming leads are supplied through back of luminaire. **Must be ordered separately** (See accessories page)
6. **DCC** and **LLC2/3/4** not available with any other controls
7. **TB** not available with **DCC**
8. **ECF-IMRI** equipped with out-boarded sensor housing when voltage is **HVU** (347-480V)
9. Mounts to a 4" round pole with adapter included for square poles.
10. Not available with **SF** and **WS**. **RPAs** provided with black finish standard
11. Limited to a maximum of 45 degrees aiming above horizontal
12. **SW** option is not available with any other control options with the exception of **IMRI3, IMRI7** and **SW-IMRO** motion response options
13. Available only on **120V** and **277V**
14. Not available with **DCC, IMRI3, IMRI7, SW, LLC** and **CS/CM/CE/DA (DynaDimmer)**.

ECF-S_Gen2 09/17 page 1 of 9

1 Fixture Type 'SLA3'

PHILIPS
GARDCO

Site & Area

EcoForm

ECF-S small



Project:
Location:
Cat.No:
Type:
Qty:
Notes:

The Philips Gardco EcoForm Gen-2 combines economy with performance in an LED area luminaire. Capable of delivering up to 26,400 lumens or more in a compact, low profile LED luminaire, EcoForm offers a new level of customer value. EcoForm features an innovative retrofit arm kit, simplifying site conversions to LED by eliminating the need to drill additional holes in most existing poles. Integral control systems available for further energy savings.

Ordering guide example: ECF-S-64L-900-NW-G2-AR-5-120-HIS-MGY

Prefix	Number of LEDs	Drive Current	LED Color - Generation	Mounting	Distribution	Voltage	Options: Dimming controls	Motion sensing	Photo-sensing	Electrical	Luminaire	Finish
ECF-S	48L	1A	NW-G2	AR	4	UNV	CM30				HIS	BK

(Option listings and footnotes 1–14 as in Fixture Type 'SLA3' above.)

ECF-S_Gen2 09/17 page 1 of 9

2 Fixture Type 'SLA4HS'

PHILIPS
GARDCO

Site & Area

EcoForm

ECF-S small

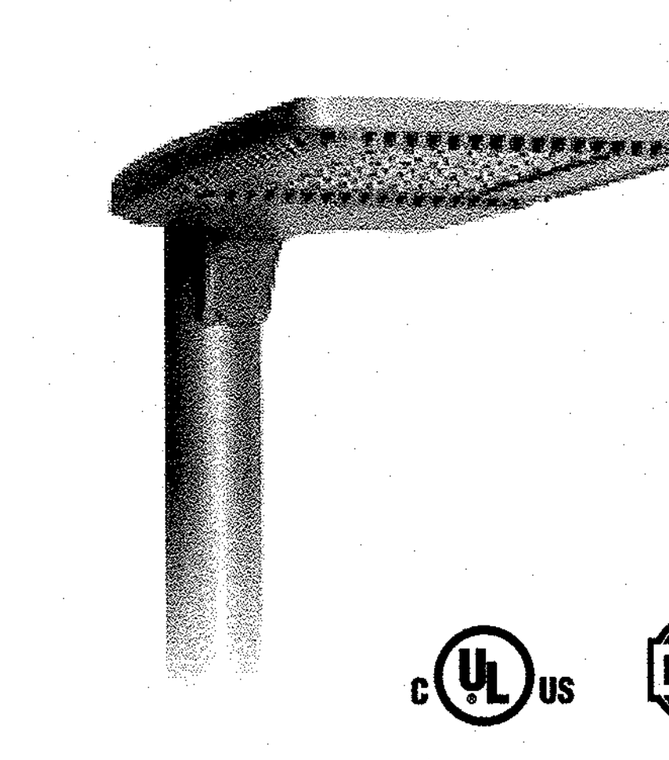

Project:
Location:
Cat.No:
Type:
Qty:
Notes:

The Philips Gardco EcoForm Gen-2 combines economy with performance in an LED area luminaire. Capable of delivering up to 26,400 lumens or more in a compact, low profile LED luminaire, EcoForm offers a new level of customer value. EcoForm features an innovative retrofit arm kit, simplifying site conversions to LED by eliminating the need to drill additional holes in most existing poles. Integral control systems available for further energy savings.

Ordering guide example: ECF-S-64L-900-NW-G2-AR-5-120-HIS-MGY

Prefix	Number of LEDs	Drive Current	LED Color - Generation	Mounting	Distribution	Voltage	Options: Dimming controls	Motion sensing	Photo-sensing	Electrical	Luminaire	Finish
ECF-S	48L	1A	NW-G2	AR	4	UNV	CM30					BK

(Option listings and footnotes 1–14 as in Fixture Type 'SLA3' above.)

ECF-S_Gen2 09/17 page 1 of 9

3 Fixture Type '2SLA4'

PHILIPS
GARDCO

Wall Mount

LED mini sconce 111L

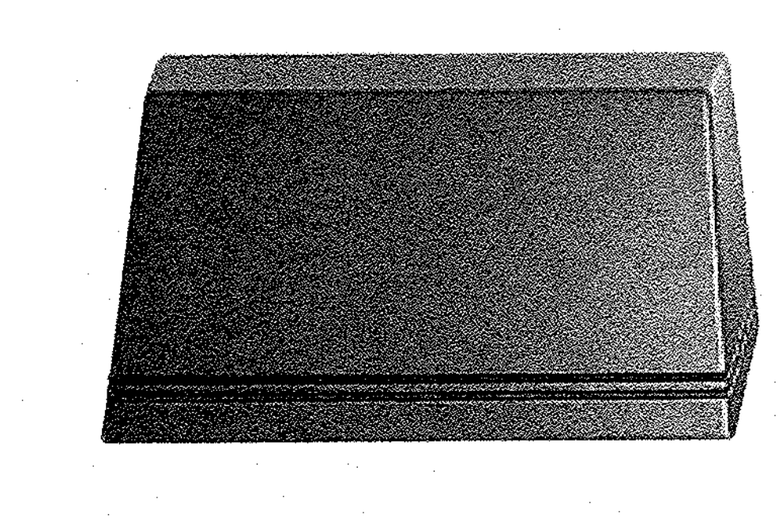

Project:
Location:
Cat.No:
Type:
Qty:
Notes:

Philips Gardco 111 LED mini sconce luminaires are compact in size, perfect for low mounting height wall mount applications. 111 LED luminaires are designed to integrate naturally to wall surfaces. 111 LED luminaires are available with three (3) different distribution patterns, providing full cutoff performance (in the normal downlight position) and featuring LED arrays. Luminaires provide performance excellence and advanced Philips Gardco LED thermal management technology. High performance Class 1 LED systems offer potential energy savings of 50 % or more compared to HID systems. 111 LED luminaires are also available with 0-10V Dimming.

Ordering guide example: 111L-16L-350-CW-G2-2-UNV-DD-BK

Prefix	No. of LEDs	Drive Current	Color/Generation	Distribution	Voltage	Controls	Electrical/Luminaire	Finish
111L	16	550	NW-G2	3	UNV	PCB		BK
111L Trapezoidal Wedge LED	16L 16 LED module	350 350mA 550 550mA 750 750mA	CW-G2 Cool White 5700K, 70 CRI generation 2 NW-G2 Neutral White 4000K, 70 CRI generation 2 WW-G2 Warm White 3000K, 70 CRI generation 2	2 Type II Wide Throw Optic, with maximized lateral throw 3 Type III Preferred Wide Throw Optic, with improved forward throw 4 Type IV Maximized forward throw optic	UNV 120-277V 50hz/60hz 120 120V 208 208V 240 240V 277 277V	PCB Photocontrol Button[1] DD 0-10V Dimming	F1 Single fusing (120, 277VAC)[1] F2 Double fusing (208, 240VAC)[1] F3 Canadian double pull fusing (208, 240VAC)[1] DL Diffusing Lens WS Wall Mounted Box for Surface Conduit	**Textured** BK Black WH White BZ Bronze DGY Dark Grey MGY Medium Grey **Customer specified** RAL Specify optional color or RAL (ex: OC-LGP or OC-RAL7024) CC Custom color (must supply color chip for required factory quote)

1. Provide specific input voltage.

Dimensions

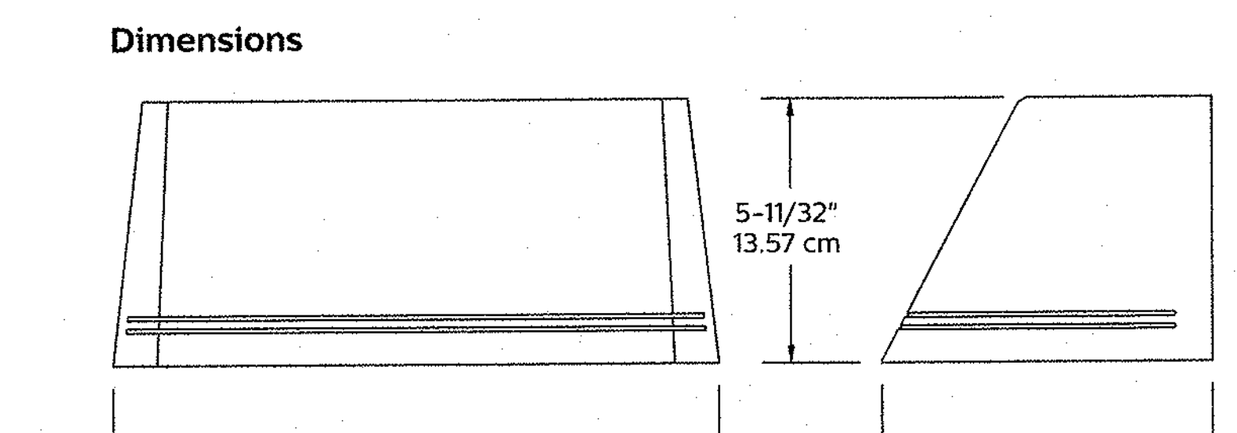

Note: Mounting plate center is located in the center of the luminaire width and 2.38" (6.03cm) above the luminaire bottom (lens down position). Splices must be made in the J-box (by others). Mounting plate must be secured by max. 1/4" (.64cm) diameter bolts (by others) structurally to the wall.

10-111_LED_Spec_Sheet 12/16 page 1 of 2

LAKE COUNTY BUILDING SERVICES
Any errors or omissions in these plans shall be made to conform with the applicable code requirements per Florida Building Code, in accordance with Section 107. Plans were reviewed for code compliance and shall be kept on job site.

4 Fixture Type 'WLA3'

RECEIVED FEB 14 2019

PERMIT REVIEW STAMP

ISSUE HISTORY

No.	Date	Description
1	02/08/2019	ISSUE FOR PERMIT

REVISION HISTORY

No.	Date	Description

FUGLEBERG KOCH
2555 Temple Trail, Winter Park, FL 32789 (407) 629-0595
www.fuglebergkoch.com BR569

CONSULTANT

Joseph, Lawrence & Co Consulting Engineers
1180 HARWOOD AVE. SUITE 3000
ALTAMONTE SPRINGS, FLORIDA 32714
TEL: 321.972.4466
WWW.JLCENG.COM
CA NO. 28730

JLC 17.0137.00
BLAKE L SUDDETH LICENSE No. 69060 STATE OF FLORIDA PROFESSIONAL ENGINEER
Blake Lawrence Suddeth
P.E. #: 69060

SUMMER BAY APTS. II
LAKE COUNTY, FL

Drawn:	MJR/KCM
Checked:	BLS/AJB
Approval:	BLS/AJB
Date:	02/08/2019
Project #:	5389

SITE FIXTURE CUT SHEETS

E1.04

© 2015 These documents and their contents are the property of FUGLEBERG KOCH, PLLC - AA26002103, and are issued only for the specific project noted on these drawings. Any reproductions, revisions, or modifications of these documents without the expressed written consent of Fugleberg Koch, PLLC is prohibited by law.

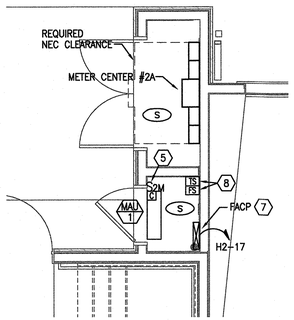

B1 ENLARGED ELECTRICAL PLAN - FIRE RISER / METER CLOSET
1/4" = 1'-0"

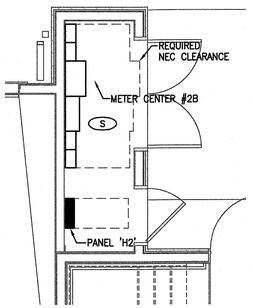

B4 ENLARGED ELECTRICAL PLAN - METER CLOSET
1/4" = 1'-0"

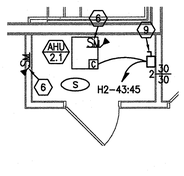

D1 ENLARGED ELECTRICAL PLAN - AC CLOSET
1/4" = 1'-0"

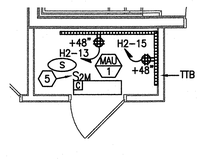

D4 ENLARGED ELECTRICAL PLAN - COMM/CABLE CLOSET
1/4" = 1'-0"

GENERAL NOTES:

A. DO NOT SCALE ELECTRICAL DRAWING FOR ANY DIMENSIONS.

B. ALL WORK SHALL COMPLY WITH THE 2014 NATIONAL ELECTRIC CODE, NATIONAL, STATE AND LOCAL CODES. PROVIDE GROUNDING AND BONDING PER NEC 250.

C. SEE SINGLE LINE DIAGRAM FOR FEEDER WIRE AND CONDUIT SIZE. ALL CIRCUITS NOT SIZED ON DRAWING SHALL BE INSTALLED TO MEET MINIMUM SIZE REQUIRED BY NEC. ALL CONDUCTORS SHALL HAVE AN EQUIPMENT GROUND WIRE SIZED PER NEC.

D. FIELD VERIFY EXACT LOCATION OF ALL DEVICES AND EQUIPMENT PRIOR TO ROUGH IN.

E. REFER TO ENLARGED TYPICAL UNIT PLANS FOR ALL ELECTRICAL IN UNITS.

REFERENCE NOTES: ⓧ

1. PROVIDE PUSHBUTTON CONTROL AND LOW VOLTAGE WIRING FOR GARAGE DOOR OPENER AS REQUIRED BY OWNER/MANUFACTURER.
2. PROVIDE 120V CEILING MOUNTED OUTLET FOR GARAGE DOOR OPENER. COORDINATE LOCATION WITH DOOR INSTALLER PRIOR TO ROUGH-IN. PROVIDE LOW VOLTAGE WIRING AND PUSH BUTTON LOCATED NEAR DOOR AS REQUIRED.
3. GARAGE EXHAUST FAN TO BE CONTROLLED BY CARBON MONOXIDE DETECTOR PROVIDED BY MECHANICAL CONTRACTOR.
4. PROVIDE 120V CONNECTION TO CARBON MONOXIDE SENSOR PROVIDED BY MECHANICAL CONTRACTOR. COORDINATE CONTROL WIRING WITH MECHANICAL CONTRACTOR AND PROVIDE AS REQUIRED. CONNECT TO LOCAL GARAGE CIRCUIT.
5. CONNECT INTERIOR MECHANICAL MINI-SPLIT UNIT THROUGH EXTERIOR UNIT. CONNECT PER MANUFACTURER'S RECOMMENDATIONS, AND PROVIDE ALL CONTROL WIRING, CONDUIT, ETC. AS REQUIRED.
6. PROVIDE 120V CIRCUIT FOR CONNECTION OF FIRE/SMOKE DAMPER, CIRCUIT H2-59. COORDINATE LOCATION AND CONNECTION REQUIREMENTS WITH MECHANICAL CONTRACTOR PRIOR TO ROUGH-IN.
7. CONNECT FIRE ALARM CONTROL PANEL (FACP) TO HOUSE PANEL. PROVIDE 3/4"C. WITH #12 WIRE TO DUCT IN CLUBHOUSE FOR MONITORING, FIRE ALARM SYSTEM TO OPERATE DIALERS. PROVIDE SURGE SUPPRESSION ON HIGH AND LOW VOLTAGE, AND PHONE LINES FOR FIRE ALARM SYSTEMS. CONTRACTOR TO PROVIDE PHONE LOOP THRU PROJECT TO CLUBHOUSE FOR FIRE ALARMS FOR TWO PHONE LINES.
8. COORDINATE EXACT LOCATION OF TAMPER AND FLOW SWITCHES WITH FIRE PROTECTION DRAWINGS PRIOR TO ROUGH-IN.
9. ELECTRICAL CONTRACTOR SHALL COORDINATE DISCONNECT AND FUSE REQUIREMENTS FOR MECHANICAL UNIT WITH MECHANICAL CONTRACTOR AND EQUIPMENT MANUFACTURER PRIOR TO ROUGH-IN AND PROVIDE AS REQUIRED. COORDINATE LOCATION OF DISCONNECT WITH OWNER AND MECHANICAL CONTRACTOR PRIOR TO ROUGH-IN. LOCATE AS REQUIRED TO MAINTAIN NEC CLEARANCES.
10. ELECTRICAL CONTRACTOR SHALL PROVIDE PLASTIC BUILDING SIGNAGE TO READ "CAUTION: BUILDING SERVICE DISCONNECT MEANS ARE LOCATED AT TWO LOCATION IN THIS BUILDING. EACH SERVICE IS LOCATED ADJACENT THE STAIRWELLS AT THE ENDS OF THE BUILDING." COORDINATE LOCATION AND ALL REQUIREMENTS WITH OWNER AND AUTHORITY HAVING JURISDICTION PRIOR TO ROUGH-IN.

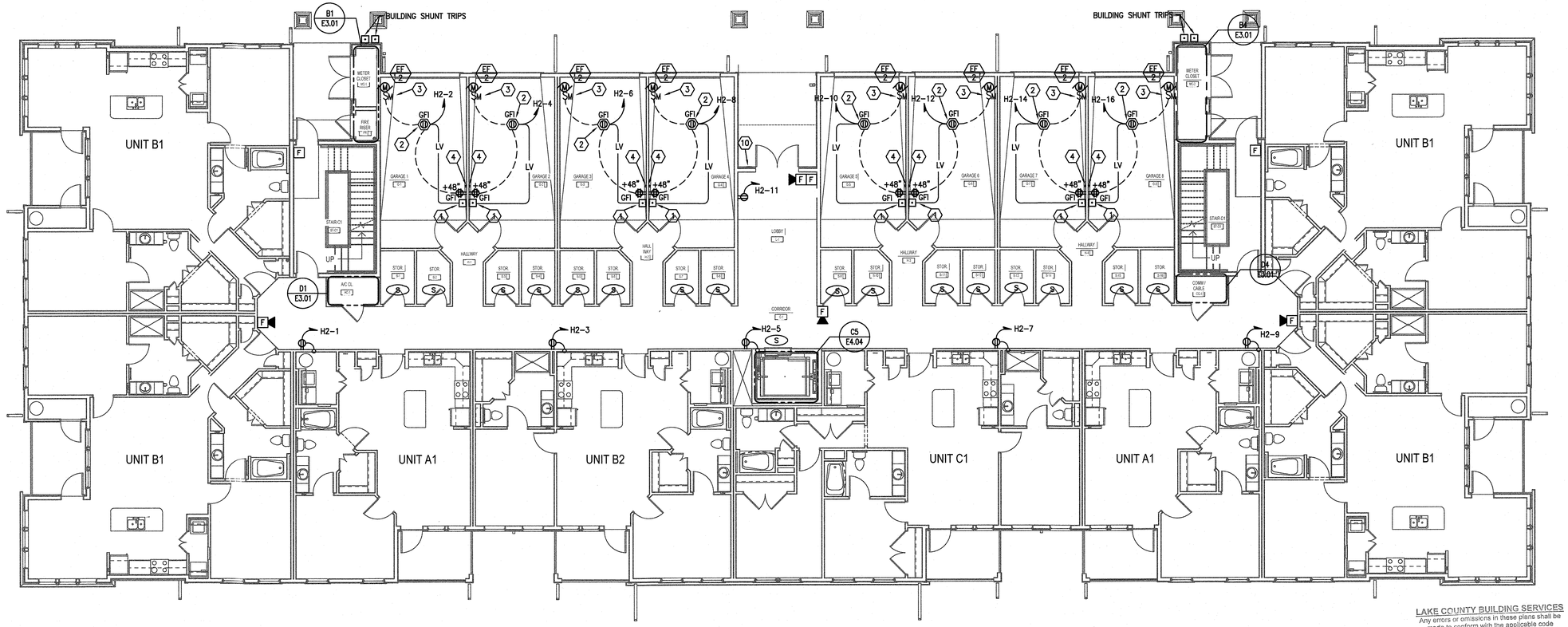

H1 BUILDING TYPE 2 - GROUND LEVEL - POWER & SYSTEMS
1/8" = 1'-0"

LAKE COUNTY BUILDING SERVICES
Any errors or omissions in these plans shall be made to conform with the applicable code requirements per Florida Building Code, in accordance with Section 107. Plans were reviewed for code compliance and shall be kept on job site.

RECEIVED FEB 14 2019

PERMIT REVIEW STAMP

ISSUE HISTORY

No.	Date	Description
1	02/08/2019	ISSUE FOR PERMIT

REVISION HISTORY

No.	Date	Description

© 2019 These drawings and their contents are the property of FUGLEBERG KOCH, P.L.C. - JLC#28730 and are issued only for the specific project noted on these drawings. Any reproductions, revisions, or modifications of these documents without the expressed written consent of Fugleberg Koch, P.L.C. is prohibited by law.

FUGLEBERG KOCH
2555 Temple Trail, Winter Park, FL 32789 (407) 629-0595
www.fuglebergkoch.com BR569

CONSULTANT
Joseph, Lawrence & Co
Consulting Engineers
1180 HARWOOD AVE. SUITE 3000
ALTAMONTE SPRINGS, FLORIDA 32714
TEL: 321.972.4466
WWW.JLCENG.COM
CA NO. 28730

JLC 17-0137.00
BLAKE L. SUDDETH
LICENSE
No. 69060
STATE OF FLORIDA
PROFESSIONAL ENGINEER
Blake Lawrence Suddeth
P.E. #: 69060

Drawn:	MJR/KCM
Checked:	BLS/AJB
Approval:	BLS/AJB
Date:	02/08/2019
Project #:	5389

SUMMER BAY APTS. II
LAKE COUNTY, FL

BUILDING TYPE 2 - GROUND FLOOR PLAN - PWR. & SYS.

E3.01

GENERAL NOTES:

A. DO NOT SCALE ELECTRICAL DRAWING FOR ANY DIMENSIONS.

B. ALL WORK SHALL COMPLY WITH THE 2014 NATIONAL ELECTRIC CODE, NATIONAL, STATE AND LOCAL CODES. PROVIDE GROUNDING AND BONDING PER NEC 250.

C. SEE SINGLE LINE DIAGRAM FOR FEEDER WIRE AND CONDUIT SIZE. ALL CIRCUITS NOT SIZED ON DRAWING SHALL BE INSTALLED TO MEET MINIMUM SIZE REQUIRED BY NEC. ALL CONDUCTORS SHALL HAVE AN EQUIPMENT GROUND WIRE SIZED PER NEC.

D. FIELD VERIFY EXACT LOCATION OF ALL DEVICES AND EQUIPMENT PRIOR TO ROUGH IN.

E. REFER TO ENLARGED TYPICAL UNIT PLANS FOR ALL ELECTRICAL IN UNITS.

REFERENCE NOTES: (X)

1. PROVIDE 120V CIRCUIT FOR CONNECTION OF FIRE/SMOKE DAMPER, CIRCUIT H2-59. COORDINATE LOCATION AND CONNECTION REQUIREMENTS WITH MECHANICAL CONTRACTOR PRIOR TO ROUGH-IN.
2. ELECTRICAL CONTRACTOR SHALL COORDINATE DISCONNECT AND FUSE REQUIREMENTS FOR MECHANICAL UNIT WITH MECHANICAL CONTRACTOR AND EQUIPMENT MANUFACTURER PRIOR TO ROUGH-IN AND PROVIDE AS REQUIRED. COORDINATE LOCATION OF DISCONNECT WITH OWNER AND MECHANICAL CONTRACTOR PRIOR TO ROUGH-IN. LOCATE AS REQUIRED TO MAINTAIN NEC CLEARANCES.
3. PROVIDE AREA OF REFUGE TWO-WAY COMMUNICATION SYSTEM AND CABLING TO MAIN BASE STATION AS REQUIRED BY 2014 5TH EDITION FBC, 2010 FFPC, AND 2012 NFPA 101 LIFE SAFETY CODE. COORDINATE LOCATION WITH OWNER AND AUTHORITY HAVING JURISDICTION PRIOR TO ROUGH-IN.

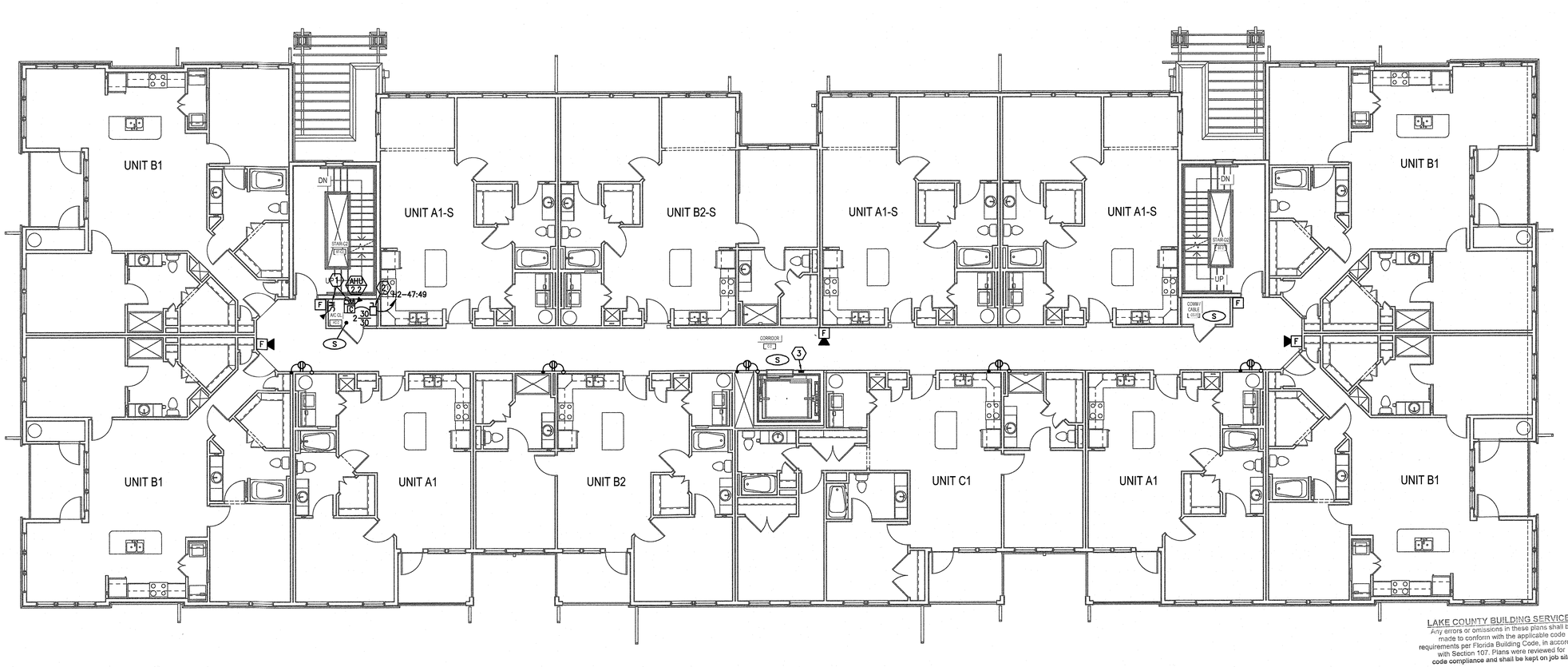

H1 BUILDING TYPE 2 - LEVEL 2 - POWER & SYSTEMS
1/8" = 1'-0"

LAKE COUNTY BUILDING SERVICES
Any errors or omissions in these plans shall be made to conform with the applicable code requirements per Florida Building Code, in accordance with Section 107. Plans were reviewed for code compliance and shall be kept on job site.

RECEIVED FEB 14 2019

PERMIT REVIEW STAMP

ISSUE HISTORY

No.	Date	Description
1	02/08/2019	ISSUE FOR PERMIT

REVISION HISTORY

No.	Date	Description

FUGLEBERG KOCH
2555 Temple Trail, Winter Park, FL 32789 (407) 629-0595
www.fuglebergkoch.com BR569

CONSULTANT
Joseph, Lawrence & Co
Consulting Engineers
1180 HARWOOD AVE. SUITE 3000
ALTAMONTE SPRINGS, FLORIDA 32714
TEL: 321.972.4466
WWW.JLCENG.COM
CA NO. 28730

JLC 17.0137.00

BLAKE L SUDDETH LICENSE No. 69060 STATE OF FLORIDA PROFESSIONAL ENGINEER

Blake Lawrence Suddeth
P.E. #: 69060

SUMMER BAY APTS. II
LAKE COUNTY, FL

Drawn:	MJR/KCM
Checked:	BLS/AJB
Approval:	BLS/AJB
Date:	02/08/2019
Project #:	5389

BUILDING TYPE 2 - LEVEL 2
PLAN - PWR. & SYS.

E3.02

© 2015 These documents and their contents are the property of FUGLEBERG KOCH, PLLC - AA26002103, and are issued only for the specific project noted on these drawings. Any reproductions, revisions, or modifications of these documents without the expressed written consent of Fugleberg Koch, PLLC is prohibited by law.

GENERAL NOTES:

A. DO NOT SCALE ELECTRICAL DRAWING FOR ANY DIMENSIONS.

B. ALL WORK SHALL COMPLY WITH THE 2014 NATIONAL ELECTRIC CODE, NATIONAL, STATE AND LOCAL CODES. PROVIDE GROUNDING AND BONDING PER NEC 250.

C. SEE SINGLE LINE DIAGRAM FOR FEEDER WIRE AND CONDUIT SIZE. ALL CIRCUITS NOT SIZED ON DRAWING SHALL BE INSTALLED TO MEET MINIMUM SIZE REQUIRED BY NEC. ALL CONDUCTORS SHALL HAVE AN EQUIPMENT GROUND WIRE SIZED PER NEC.

D. FIELD VERIFY EXACT LOCATION OF ALL DEVICES AND EQUIPMENT PRIOR TO ROUGH IN.

E. REFER TO ENLARGED TYPICAL UNIT PLANS FOR ALL ELECTRICAL IN UNITS.

REFERENCE NOTES: (X)

1. PROVIDE 120V CIRCUIT FOR CONNECTION OF FIRE/SMOKE DAMPER, CIRCUIT H2-59. COORDINATE LOCATION AND CONNECTION REQUIREMENTS WITH MECHANICAL CONTRACTOR PRIOR TO ROUGH-IN.

2. ELECTRICAL CONTRACTOR SHALL COORDINATE DISCONNECT AND FUSE REQUIREMENTS FOR MECHANICAL UNIT WITH MECHANICAL CONTRACTOR AND EQUIPMENT MANUFACTURER PRIOR TO ROUGH-IN AND PROVIDE AS REQUIRED. COORDINATE LOCATION OF DISCONNECT WITH OWNER AND MECHANICAL CONTRACTOR PRIOR TO ROUGH-IN. LOCATE AS REQUIRED TO MAINTAIN NEC CLEARANCES.

3. PROVIDE AREA OF REFUGE TWO-WAY COMMUNICATION SYSTEM AND CABLING TO MAIN BASE STATION AS REQUIRED BY 2014 5TH EDITION FBC, 2010 FFPC, AND 2012 NFPA 101 LIFE SAFETY CODE. COORDINATE LOCATION WITH OWNER AND AUTHORITY HAVING JURISDICTION PRIOR TO ROUGH-IN.

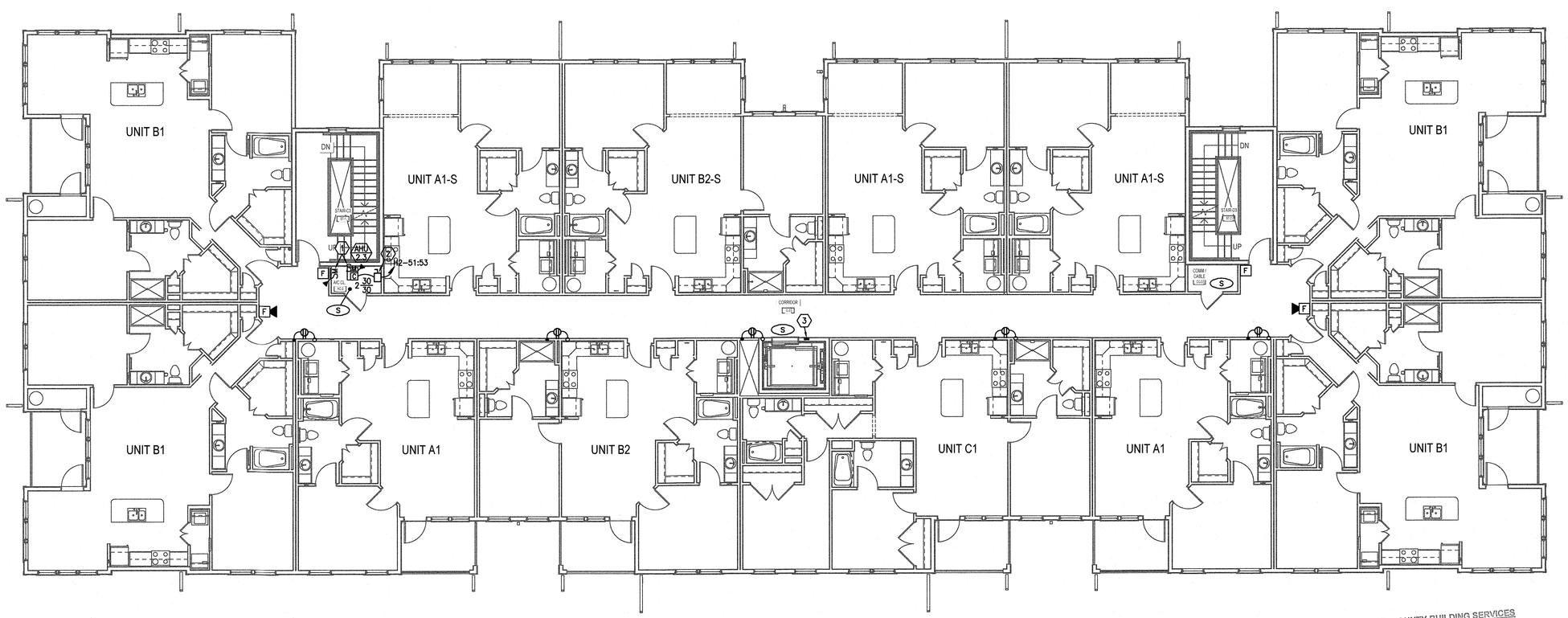

H1 BUILDING TYPE 2 - LEVEL 3 - POWER & SYSTEMS
1/8" = 1'-0"

LAKE COUNTY BUILDING SERVICES
Any errors or omissions in these plans shall be made to conform with the applicable code requirements per Florida Building Code, in accordance with Section 107. Plans were reviewed for code compliance and shall be kept on job site.

RECEIVED FEB 14 2019

PERMIT REVIEW STAMP

ISSUE HISTORY

No.	Date	Description
1	02/08/2019	ISSUE FOR PERMIT

REVISION HISTORY

No.	Date	Description

© 2015 These documents and their contents are the property of FUGLEBERG KOCH, PLLC - AA26002103, and are issued only for the specific project noted on these drawings. Any reproductions, revisions, or modifications of these documents without the expressed written consent of Fugleberg Koch, PLLC is prohibited by law.

FUGLEBERG KOCH
2555 Temple Trail, Winter Park, FL 32789 (407) 629-0595
www.fuglebergkoch.com BR569

CONSULTANT
Joseph, Lawrence & Co
Consulting Engineers
1180 HARWOOD AVE. SUITE 3000
ALTAMONTE SPRINGS, FLORIDA 32714
TEL: 321.972.4466
WWW.JLCENG.COM
CA NO. 28730

JLC 17.0137/00

BLAKE L SUDDETH
LICENSE
No. 69060
STATE OF FLORIDA
PROFESSIONAL ENGINEER

Blake Lawrence Suddeth
P.E. #: 69060

SUMMER BAY
APTS. II
LAKE COUNTY, FL

Drawn:	MJR/KCM
Checked:	BLS/AJB
Approval:	BLS/AJB
Date:	02/08/2019
Project #:	5389

BUILDING TYPE 2 - LEVEL 3
PLAN - PWR. & SYS.

E3.03

GENERAL NOTES:

A. DO NOT SCALE ELECTRICAL DRAWING FOR ANY DIMENSIONS.

B. ALL WORK SHALL COMPLY WITH THE 2014 NATIONAL ELECTRIC CODE, NATIONAL, STATE AND LOCAL CODES. PROVIDE GROUNDING AND BONDING PER NEC 250.

C. SEE SINGLE LINE DIAGRAM FOR FEEDER WIRE AND CONDUIT SIZE. ALL CIRCUITS NOT SIZED ON DRAWING SHALL BE INSTALLED TO MEET MINIMUM SIZE REQUIRED BY NEC. ALL CONDUCTORS SHALL HAVE AN EQUIPMENT GROUND WIRE SIZED PER NEC.

D. FIELD VERIFY EXACT LOCATION OF ALL DEVICES AND EQUIPMENT PRIOR TO ROUGH IN.

E. REFER TO ENLARGED TYPICAL UNIT PLANS FOR ALL ELECTRICAL IN UNITS.

REFERENCE NOTES: ⓧ

1. PROVIDE 120V CIRCUIT FOR CONNECTION OF FIRE/SMOKE DAMPER, CIRCUIT H2-59. COORDINATE LOCATION AND CONNECTION REQUIREMENTS WITH MECHANICAL CONTRACTOR PRIOR TO ROUGH-IN.

2. ELECTRICAL CONTRACTOR SHALL COORDINATE DISCONNECT AND FUSE REQUIREMENTS FOR MECHANICAL UNIT WITH MECHANICAL CONTRACTOR AND EQUIPMENT MANUFACTURER PRIOR TO ROUGH-IN AND PROVIDE AS REQUIRED. COORDINATE LOCATION OF DISCONNECT WITH OWNER AND MECHANICAL CONTRACTOR PRIOR TO ROUGH-IN. LOCATE AS REQUIRED TO MAINTAIN NEC CLEARANCES.

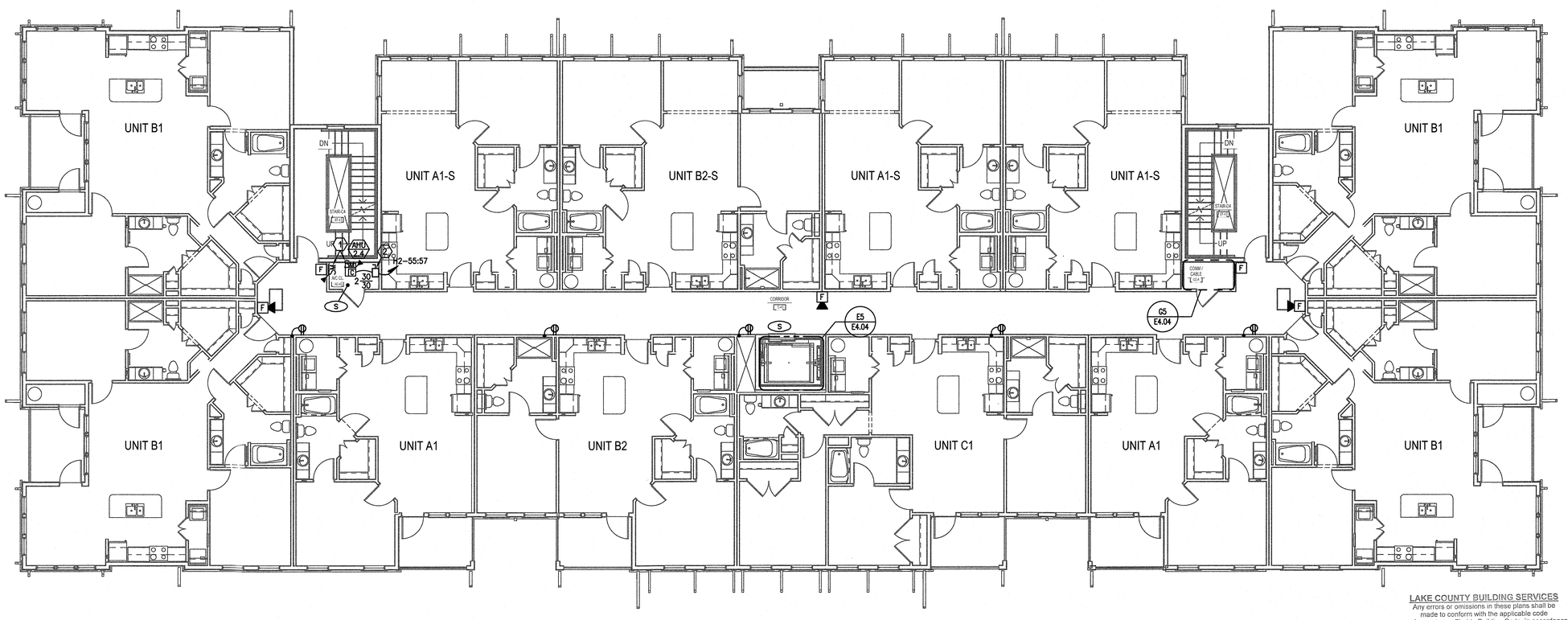

H1 BUILDING TYPE 2 - LEVEL 4 - POWER & SYSTEMS
1/8" = 1'-0"

LAKE COUNTY BUILDING SERVICES
Any errors or omissions in these plans shall be made to conform with the applicable code requirements per Florida Building Code, in accordance with Section 107. Plans were reviewed for code compliance and shall be kept on job site.

RECEIVED FEB 14 2019

PERMIT REVIEW STAMP

ISSUE HISTORY

No.	Date	Description
1	02/08/2019	ISSUE FOR PERMIT

REVISION HISTORY

No.	Date	Description

FUGLEBERG KOCH
2555 Temple Trail, Winter Park, FL 32789 (407) 629-0595
www.fuglebergkoch.com BR569

CONSULTANT
Joseph, Lawrence & Co
Consulting Engineers
1180 HARWOOD AVE. SUITE 3000
ALTAMONTE SPRINGS, FLORIDA 32714
TEL: 321.972.4466
WWW.JLCENG.COM
CA NO. 28730

JLC 17.0137.00

Blake Lawrence Suddeth
P.E. #: 69060

SUMMER BAY APTS. II
LAKE COUNTY, FL

Drawn:	MJR/KCM
Checked:	BLS/AJB
Approval:	BLS/AJB
Date:	02/08/2019
Project #:	5389

BUILDING TYPE 2 - LEVEL 4
PLAN - PWR. & SYS.

E3.04

© 2015 These documents and their contents are the property of FUGLEBERG KOCH, PLLC - AA26002103, and are issued only for the specific project noted on these drawings. Any reproductions, revisions, or modifications of these documents without the expressed written consent of Fugleberg Koch, PLLC is prohibited by law.

GENERAL NOTES:

A. DO NOT SCALE ELECTRICAL DRAWING FOR ANY DIMENSIONS.

B. ALL WORK SHALL COMPLY WITH THE 2014 NATIONAL ELECTRIC CODE, NATIONAL, STATE AND LOCAL CODES. PROVIDE GROUNDING AND BONDING PER NEC 250.

C. SEE SINGLE LINE DIAGRAM FOR FEEDER WIRE AND CONDUIT SIZE. ALL CIRCUITS NOT SIZED ON DRAWING SHALL BE INSTALLED TO MEET MINIMUM SIZE REQUIRED BY NEC. ALL CONDUCTORS SHALL HAVE AN EQUIPMENT GROUND WIRE SIZED PER NEC.

D. FIELD VERIFY EXACT LOCATION OF ALL DEVICES AND EQUIPMENT PRIOR TO ROUGH IN.

E. REFER TO ENLARGED TYPICAL UNIT PLANS FOR ALL ELECTRICAL IN UNITS.

REFERENCE NOTES: ⟨X⟩

⟨1⟩ ELECTRICAL CONTRACTOR SHALL COORDINATE DISCONNECT AND FUSE REQUIREMENTS FOR MECHANICAL UNIT WITH MECHANICAL CONTRACTOR AND EQUIPMENT MANUFACTURER PRIOR TO ROUGH-IN AND PROVIDE AS REQUIRED. CONNECT CONDENSING UNIT TO CORRESPONDING UNIT PANEL, REFER TO TYPICAL PLANS AND SCHEDULES FOR CIRCUITING AND SIZING INFORMATION. COORDINATE LOCATION OF DISCONNECT WITH OWNER AND MECHANICAL CONTRACTOR PRIOR TO ROUGH-IN. LOCATE AS REQUIRED TO MAINTAIN NEC CLEARANCES.

⟨2⟩ ELECTRICAL CONTRACTOR SHALL COORDINATE DISCONNECT AND FUSE REQUIREMENTS FOR MECHANICAL UNIT WITH MECHANICAL CONTRACTOR AND EQUIPMENT MANUFACTURER PRIOR TO ROUGH-IN AND PROVIDE AS REQUIRED. COORDINATE LOCATION OF DISCONNECT WITH OWNER AND MECHANICAL CONTRACTOR PRIOR TO ROUGH-IN. LOCATE AS REQUIRED TO MAINTAIN NEC CLEARANCES.

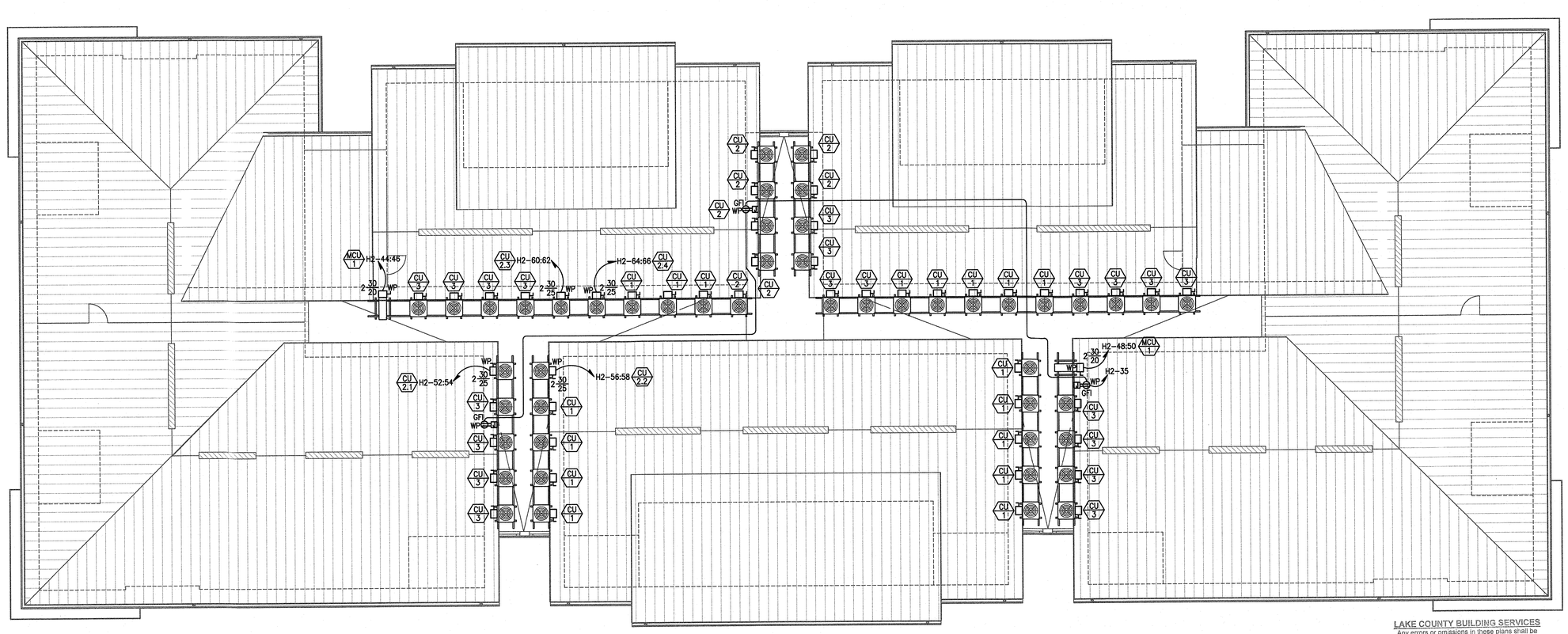

H1 BUILDING TYPE 2 - ROOF - ELECTRICAL
1/8" = 1'-0"

LAKE COUNTY BUILDING SERVICES
Any errors or omissions in these plans shall be made to conform with the applicable code requirements per Florida Building Code, in accordance with Section 107. Plans were reviewed for code compliance and shall be kept on job site.

RECEIVED FEB 14 2019

PERMIT REVIEW STAMP

ISSUE HISTORY

No.	Date	Description
1	02/08/2019	ISSUE FOR PERMIT

REVISION HISTORY

No.	Date	Description

© 2015 These documents and their contents are the property of FUGLEBERG KOCH, PLLC - AA26002920, and are issued only for the specific project noted on these drawings. Any reproductions, revisions, or modifications of these documents without the expressed written consent of Fugleberg Koch, PLLC is prohibited by law.

FUGLEBERG KOCH
2555 Temple Trail, Winter Park, FL 32789 (407) 629-0595
www.fuglebergkoch.com BR569

CONSULTANT
Joseph, Lawrence & Co
Consulting Engineers
1180 HARWOOD AVE. SUITE 3000
ALTAMONTE SPRINGS, FLORIDA 32714
TEL: 321.972.4466
WWW.JLCENG.COM
CA NO. 28730

JLC 17.0137.00

BLAKE L. SUDDETH LICENSE NUMBER 69060 STATE OF FLORIDA PROFESSIONAL ENGINEER

Blake Lawrence Suddeth
P.E. #: 69060

SUMMER BAY APTS. II
LAKE COUNTY, FL

Drawn:	MJR/KCM
Checked:	BLS/AJB
Approved:	BLS/AJB
Date:	02/08/2019
Project #:	5389

BUILDING TYPE 2 - ROOF - ELECTRICAL

E3.05

GENERAL NOTES:

A. DO NOT SCALE ELECTRICAL DRAWING FOR ANY DIMENSIONS.

B. ALL WORK SHALL COMPLY WITH THE 2014 NATIONAL ELECTRIC CODE, NATIONAL, STATE AND LOCAL CODES. PROVIDE GROUNDING AND BONDING PER NEC 250.

C. SEE SINGLE LINE DIAGRAM FOR FEEDER WIRE AND CONDUIT SIZE. ALL CIRCUITS NOT SIZED ON DRAWING SHALL BE INSTALLED TO MEET MINIMUM SIZE REQUIRED BY NEC. ALL CONDUCTORS SHALL HAVE AN EQUIPMENT GROUND WIRE SIZED PER NEC.

D. FIELD VERIFY EXACT LOCATION OF ALL DEVICES AND EQUIPMENT PRIOR TO ROUGH IN.

E. REFER TO ENLARGED TYPICAL UNIT PLANS FOR ALL ELECTRICAL IN UNITS.

REFERENCE NOTES: ⟨X⟩

⟨1⟩ COORDINATE MOUNTING HEIGHT AND LOCATION OF FIXTURE OVER STAIR WITH ARCHITECT PRIOR TO ROUGH-IN.

⟨2⟩ CONNECT LIGHT FIXTURES VIA PHOTOCELL FOR AUTOMATIC CONTROL OF FIXTURES.

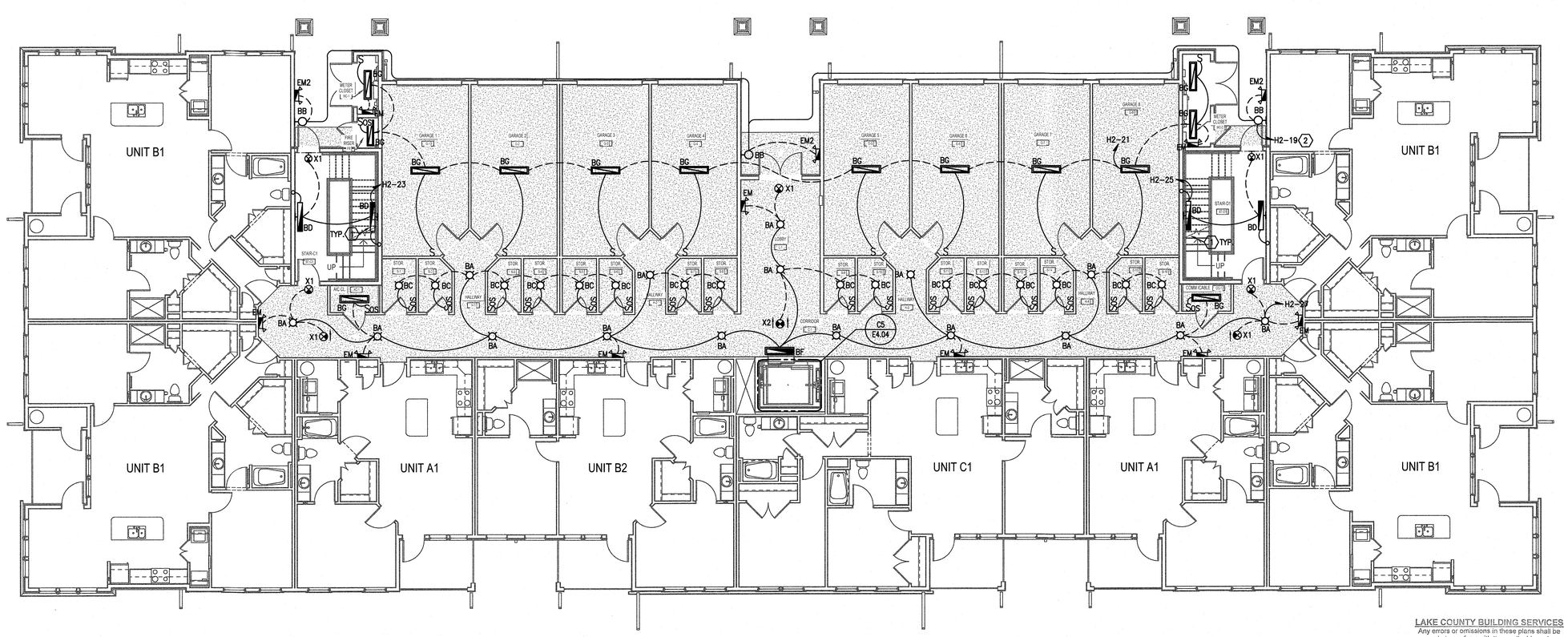

H1 BUILDING TYPE 2 - GROUND LEVEL - LIGHTING
1/8" = 1'-0"

LAKE COUNTY BUILDING SERVICES
Any errors or omissions in these plans shall be made to conform with the applicable code requirements per Florida Building Code, in accordance with Section 107. Plans were reviewed for code compliance and shall be kept on job site.

RECEIVED FEB 14 2019

PERMIT REVIEW STAMP

ISSUE HISTORY

No.	Date	Description
1	02/08/2019	ISSUE FOR PERMIT

REVISION HISTORY

No.	Date	Description

© 2015 These documents and their contents are the property of FUGLEBERG KOCH, PLLC - AA26002105, and are issued only for the specific project noted on these drawings. Any reproductions, revisions, or modifications of these documents without the expressed written consent of Fugleberg Koch, PLLC is prohibited by law.

FUGLEBERG KOCH
2555 Temple Trail, Winter Park, FL 32789 (407) 629-0595
www.fuglebergkoch.com BR569

CONSULTANT
Joseph, Lawrence & Co Consulting Engineers
1180 HARWOOD AVE. SUITE 3000
ALTAMONTE SPRINGS, FLORIDA 32714
TEL. 321.972.4466
WWW.JLCENG.COM
CA NO. 28730

JLC 17.0137.00

STATE OF FLORIDA — BLAKE L. SUDDETH — LICENSE No. 69060 — PROFESSIONAL ENGINEER
Blake Lawrence Suddeth
P.E. #: 69060

SUMMER BAY APTS. II
LAKE COUNTY, FL

Drawn:	MJR/KCM
Checked:	BLS/AJB
Approval:	BLS/AJB
Date:	02/08/2019
Project #:	5389

BUILDING TYPE 2 - GROUND FLOOR PLAN - LIGHTING

E3.06

GENERAL NOTES:

A. DO NOT SCALE ELECTRICAL DRAWING FOR ANY DIMENSIONS.

B. ALL WORK SHALL COMPLY WITH THE 2014 NATIONAL ELECTRIC CODE, NATIONAL, STATE AND LOCAL CODES. PROVIDE GROUNDING AND BONDING PER NEC 250.

C. SEE SINGLE LINE DIAGRAM FOR FEEDER WIRE AND CONDUIT SIZE. ALL CIRCUITS NOT SIZED ON DRAWING SHALL BE INSTALLED TO MEET MINIMUM SIZE REQUIRED BY NEC. ALL CONDUCTORS SHALL HAVE AN EQUIPMENT GROUND WIRE SIZED PER NEC.

D. FIELD VERIFY EXACT LOCATION OF ALL DEVICES AND EQUIPMENT PRIOR TO ROUGH IN.

E. REFER TO ENLARGED TYPICAL UNIT PLANS FOR ALL ELECTRICAL IN UNITS.

REFERENCE NOTES: (X)

(1) COORDINATE MOUNTING HEIGHT AND LOCATION OF FIXTURE OVER STAIR WITH ARCHITECT PRIOR TO ROUGH-IN.

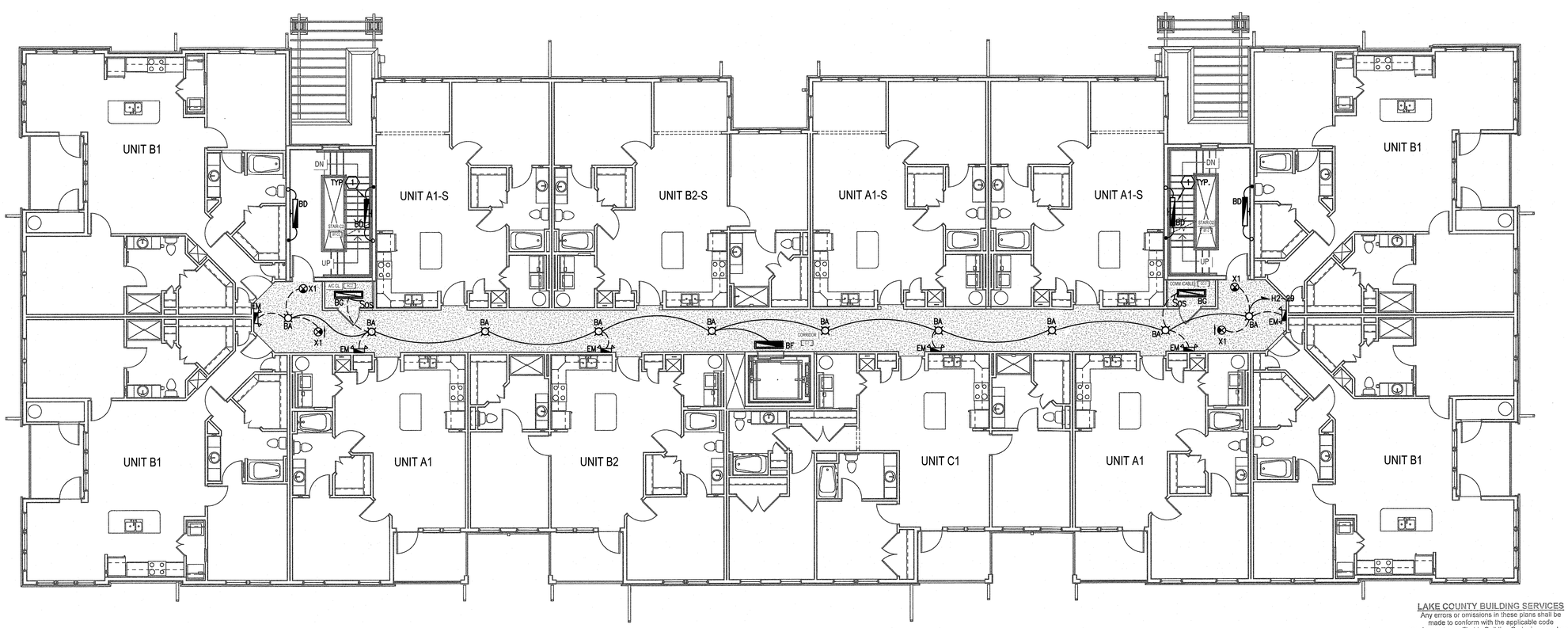

H1 BUILDING TYPE 2 - LEVEL 2 - LIGHTING
1/8" = 1'-0"

LAKE COUNTY BUILDING SERVICES
Any errors or omissions in these plans shall be made to conform with the applicable code requirements per Florida Building Code, in accordance with Section 107. Plans were reviewed for code compliance and shall be kept on job site.

RECEIVED FEB 14 2019

PERMIT REVIEW STAMP

ISSUE HISTORY

No.	Date	Description
1	02/08/2019	ISSUE FOR PERMIT

REVISION HISTORY

No.	Date	Description

FUGLEBERG KOCH
2555 Temple Trail, Winter Park, FL 32789 (407) 629-0595
www.fuglebergkoch.com BR569

CONSULTANT
Joseph, Lawrence & Co
Consulting Engineers
1180 HARWOOD AVE. SUITE 3000
ALTAMONTE SPRINGS, FLORIDA 32714
TEL: 321.972.4466
WWW.JLCENG.COM
CA NO. 28730

JLC 17.0137.00

Blake Lawrence Suddeth
P.E. #: 69060

SUMMER BAY APTS. II
LAKE COUNTY, FL

Drawn:	MJR/KCM
Checked:	BLS/AJB
Approval:	BLS/AJB
Date:	02/08/2019
Project #:	5389

BUILDING TYPE 2 - LEVEL 2
PLAN - LIGHTING

E3.07

© 2015 These documents and their contents are the property of FUGLEBERG KOCH, PLLC - AA26002103, and are issued only for the specific project noted on these drawings. Any reproductions, revisions, or modifications of these documents without the expressed written consent of Fugleberg Koch, PLLC is prohibited by law.

GENERAL NOTES:

A. DO NOT SCALE ELECTRICAL DRAWING FOR ANY DIMENSIONS.

B. ALL WORK SHALL COMPLY WITH THE 2014 NATIONAL ELECTRIC CODE, NATIONAL, STATE AND LOCAL CODES. PROVIDE GROUNDING AND BONDING PER NEC 250.

C. SEE SINGLE LINE DIAGRAM FOR FEEDER WIRE AND CONDUIT SIZE. ALL CIRCUITS NOT SIZED ON DRAWING SHALL BE INSTALLED TO MEET MINIMUM SIZE REQUIRED BY NEC. ALL CONDUCTORS SHALL HAVE AN EQUIPMENT GROUND WIRE SIZED PER NEC.

D. FIELD VERIFY EXACT LOCATION OF ALL DEVICES AND EQUIPMENT PRIOR TO ROUGH IN.

E. REFER TO ENLARGED TYPICAL UNIT PLANS FOR ALL ELECTRICAL IN UNITS.

REFERENCE NOTES: ⓧ

(1) COORDINATE MOUNTING HEIGHT AND LOCATION OF FIXTURE OVER STAIR WITH ARCHITECT PRIOR TO ROUGH-IN.

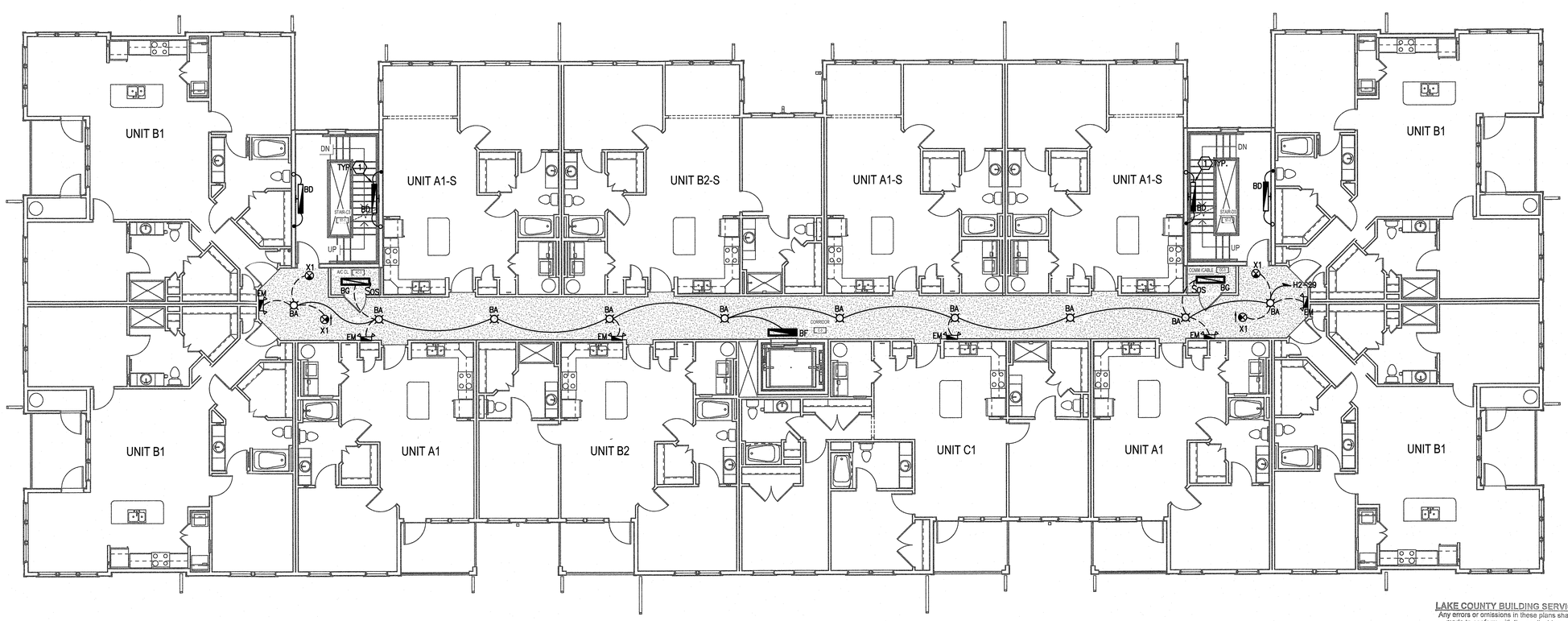

H1 BUILDING TYPE 2 - LEVEL 3 - LIGHTING
1/8" = 1'-0"

LAKE COUNTY BUILDING SERVICES
Any errors or omissions in these plans shall be made to conform with the applicable code requirements per Florida Building Code, in accordance with Section 107. Plans were reviewed for code compliance and shall be kept on job site.

RECEIVED FEB 14 2019

PERMIT REVIEW STAMP

ISSUE HISTORY

No.	Date	Description
1	02/08/2019	ISSUE FOR PERMIT

REVISION HISTORY

No.	Date	Description

© 2019 These documents and their contents are the property of Fugleberg Koch, PLLC. Published in the USA. These documents are for use on the specific project noted on these drawings. Any reproductions, revisions, or modifications of these documents without the expressed written consent of Fugleberg Koch, PLLC is prohibited by law.

FUGLEBERG KOCH
2555 Temple Trail, Winter Park, FL 32789 (407) 629-0595
www.fuglebergkoch.com BR569

CONSULTANT
Joseph, Lawrence & Co
Consulting Engineers
1180 HARWOOD AVE. SUITE 3000
ALTAMONTE SPRINGS, FLORIDA 32714
TEL: 321.972.4466
WWW.JLCENG.COM
CA NO. 28730

JLC 17-0137.00
BLAKE L SUDDETH
LICENSED
No. 69060
STATE OF FLORIDA
PROFESSIONAL ENGINEER
Blake Lawrence Suddeth
P.E. #: 69060

SUMMER BAY APTS. II
LAKE COUNTY, FL

Drawn:	MJR/KCM
Checked:	BLS/AJB
Approval:	BLS/AJB
Date:	02/08/2019
Project #:	5389

BUILDING TYPE 2 - LEVEL 3 PLAN - LIGHTING

E3.08

GENERAL NOTES:

A. DO NOT SCALE ELECTRICAL DRAWING FOR ANY DIMENSIONS.

B. ALL WORK SHALL COMPLY WITH THE 2014 NATIONAL ELECTRIC CODE, NATIONAL, STATE AND LOCAL CODES. PROVIDE GROUNDING AND BONDING PER NEC 250.

C. SEE SINGLE LINE DIAGRAM FOR FEEDER WIRE AND CONDUIT SIZE. ALL CIRCUITS NOT SIZED ON DRAWING SHALL BE INSTALLED TO MEET MINIMUM SIZE REQUIRED BY NEC. ALL CONDUCTORS SHALL HAVE AN EQUIPMENT GROUND WIRE SIZED PER NEC.

D. FIELD VERIFY EXACT LOCATION OF ALL DEVICES AND EQUIPMENT PRIOR TO ROUGH IN.

E. REFER TO ENLARGED TYPICAL UNIT PLANS FOR ALL ELECTRICAL IN UNITS.

REFERENCE NOTES: ⓧ

⟨1⟩ COORDINATE MOUNTING HEIGHT AND LOCATION OF FIXTURE OVER STAIR WITH ARCHITECT PRIOR TO ROUGH-IN.

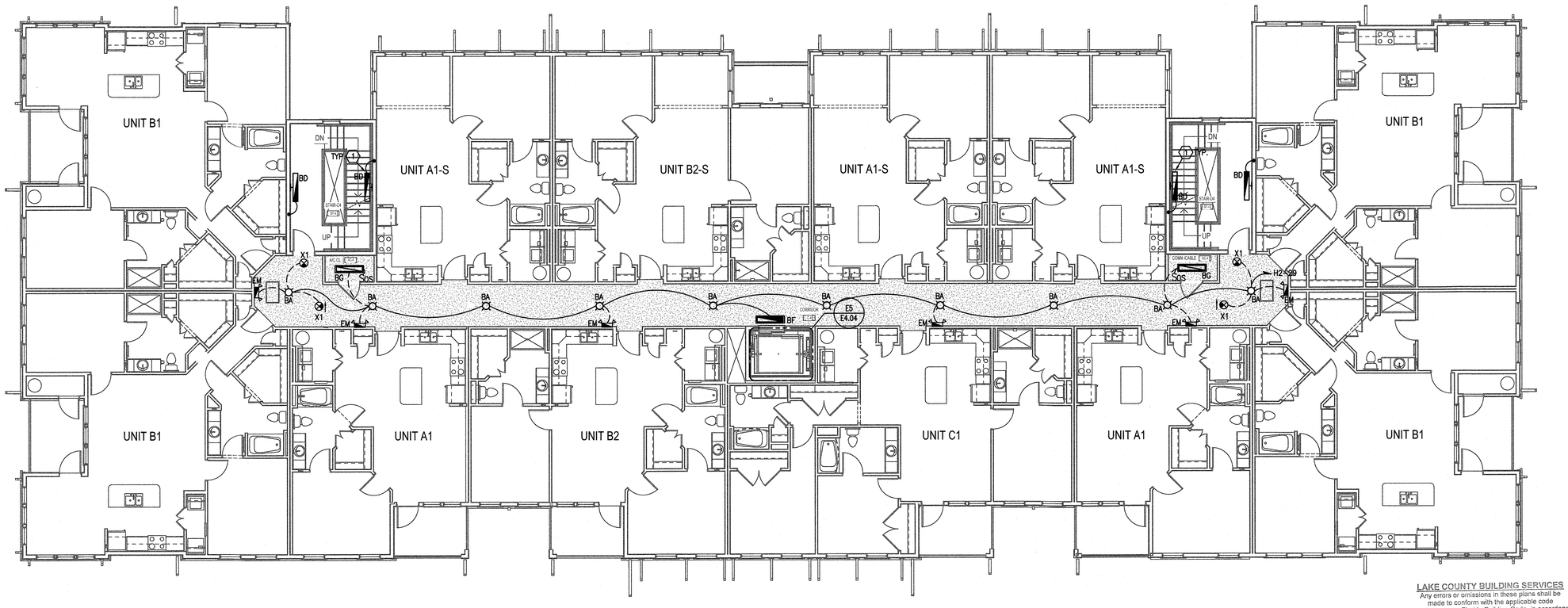

H1 BUILDING TYPE 2 - LEVEL 4 - LIGHTING
1/8" = 1'-0"

LAKE COUNTY BUILDING SERVICES
Any errors or omissions in these plans shall be made to conform with the applicable code requirements per Florida Building Code, in accordance with Section 107. Plans were reviewed for code compliance and shall be kept on job site.

RECEIVED FEB 14 2019

PERMIT REVIEW STAMP

ISSUE HISTORY

No.	Date	Description
1	02/08/2019	ISSUE FOR PERMIT

REVISION HISTORY

No.	Date	Description

© 2015 These documents and their contents are the property of FUGLEBERG KOCH, PLLC - LA26002103, and are issued only for the specific project noted on these drawings. Any reproductions, revisions, or modifications of these documents without the expressed written consent of Fugleberg Koch, PLLC is prohibited by law.

FUGLEBERG KOCH
2555 Temple Trail, Winter Park, FL 32789 (407) 629-0595
www.fuglebergkoch.com BR569

CONSULTANT
Joseph, Lawrence & Co
Consulting Engineers
1180 HARWOOD AVE. SUITE 3000
ALTAMONTE SPRINGS, FLORIDA 32714
TEL: 321.972.4466
WWW.JLCENG.COM
CA NO. 28730

JLC 17-0137.00
BLAKE L. SUDDETH
No. 69060
STATE OF FLORIDA
PROFESSIONAL ENGINEER
Blake Lawrence Suddeth
P.E. #: 69060

Drawn:	MJR/KCM
Checked:	BLS/AJB
Approved:	BLS/AJB
Date:	02/08/2019
Project #:	5389

SUMMER BAY APTS. II
LAKE COUNTY, FL

BUILDING TYPE 2 - LEVEL 4 PLAN - LIGHTING

E3.09

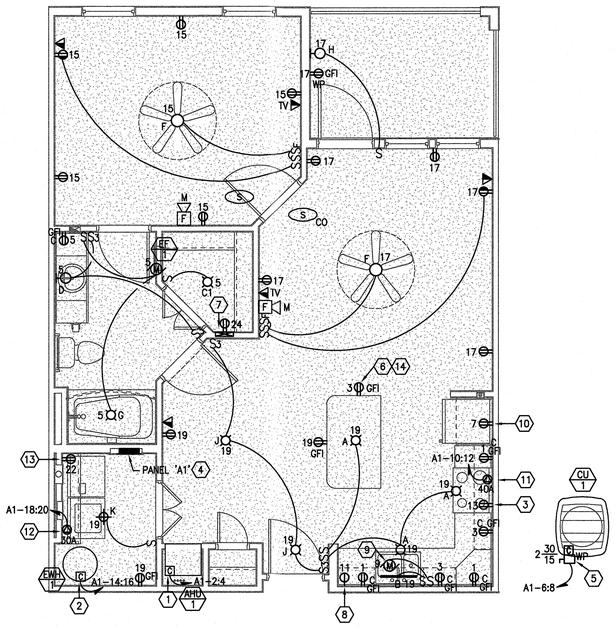

D1 ENLARGED TYPICAL UNIT TYPE 'A1' - ELECTRICAL

1/4" = 1'-0"

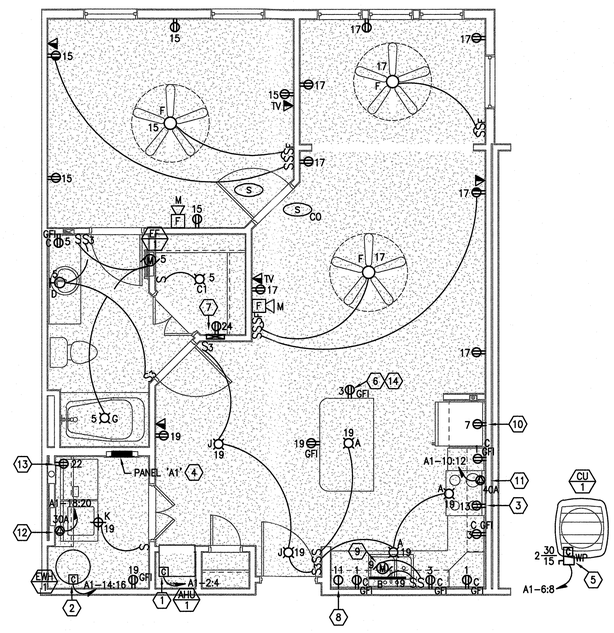

H1 ENLARGED TYPICAL UNIT TYPE 'A1S' - ELECTRICAL

1/4" = 1'-0"

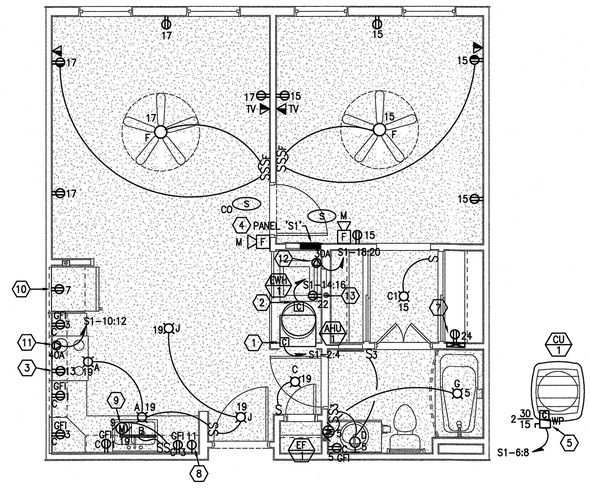

H5 ENLARGED TYPICAL UNIT TYPE 'S1' - ELECTRICAL

1/4" = 1'-0"

REFERENCE NOTES: ⓧ

1. CONNECT MECHANICAL UNIT VIA INTEGRAL DISCONNECT PROVIDED WITH UNIT. COORDINATE EXACT REQUIREMENTS WITH MECHANICAL CONTRACTOR PRIOR TO ROUGH-IN.
2. PROVIDE CIRCUIT BREAKER FEEDING WATER HEATER WITH "LOCK OUT" STYLE BREAKER HANDLE PER NEC 422.31.
3. PROVIDE 120V ELECTRICAL CONNECTION FOR MICROWAVE/HOOD CONNECTION. INSTALL RECEPTACLE AT 78"AFF INSIDE THE CABINET. COORDINATE LOCATION WITH MILLWORK INSTALLER PRIOR TO ROUGH-IN.
4. REFER TO POWER RISER DIAGRAM AND UNIT PANEL SCHEDULES FOR ADDITIONAL INFORMATION.
5. PROVIDE ELECTRICAL CONNECTION TO UNIT'S ASSOCIATED CONDENSING UNIT. COORDINATE LOCATION WITH MECHANICAL CONTRACTOR PRIOR TO ROUGH-IN. COORDINATE ROUTING OF CONDUIT THROUGH BUILDING WITH GENERAL CONTRACTOR PRIOR TO ROUGH-IN. INCREASE WIRE SIZE AS REQUIRED FOR CIRCUIT LENGTH PER FBC AND NEC.
6. PROVIDE COMBINATION 120V TAMPER RESISTANT RECEPTACLE AND USB CHARGER OUTLET (COOPER #TR7741 OR APPROVED SUBSTITUTION). COLOR AS SELECTED BY OWNER. PROVIDE JUNCTION BOX SIZED AS REQUIRED BY NEC AND MANUFACTURER FOR DEVICE. COORDINATE OUTLET LOCATION WITH OWNER PRIOR TO ROUGH-IN.
7. 12"x18"x3" DEEP FLUSH MOUNTED CABINET WITH DOOR FOR TELEPHONE AND TV CABLE TERMINATIONS. "NTC" CABINET. COORDINATE EXACT LOCATION WITH ALL TRADES PRIOR TO ROUGH-IN. CONTRACTOR TO PULL AND LABEL ALL LINES IN STAR CONFIGURATION.
8. PROVIDE 120V CONNECTION FOR DISHWASHER. COORDINATE CONNECTION REQUIREMENTS AND LOCATION WITH EQUIPMENT INSTALLER PRIOR TO ROUGH-IN.
9. PROVIDE 120V CONNECTION FOR GARBAGE DISPOSAL. COORDINATE CONNECTION REQUIREMENTS AND LOCATION WITH EQUIPMENT INSTALLER PRIOR TO ROUGH-IN.
10. PROVIDE 120V OUTLET FOR REFRIGERATOR, 48"AFF.
11. PROVIDE 240V/40A/1ϕ OUTLET FOR RANGE. COORDINATE PLUG CONFIGURATION AND LOCATION WITH EQUIPMENT INSTALLER PRIOR TO ROUGH-IN.
12. PROVIDE 240V/30A/1ϕ OUTLET FOR DRYER. COORDINATE PLUG CONFIGURATION AND LOCATION WITH EQUIPMENT INSTALLER PRIOR TO ROUGH-IN.
13. PROVIDE 120V OUTLET FOR WASHER, 36"AFF.
14. LOCATE 120V RECEPTACLE IN LOW WALL BELOW COUNTER HEIGHT. COORDINATE LOCATION WITH OWNER PRIOR TO ROUGH-IN. PER NEC 210.52(C)(5)

GENERAL NOTES:

A. DO NOT SCALE ELECTRICAL DRAWINGS FOR ANY DIMENSIONS.

B. ALL WORK SHALL COMPLY WITH THE 2014 NATIONAL ELECTRIC CODE, NATIONAL, STATE AND LOCAL CODES. PROVIDE GROUNDING AND BONDING PER NEC 250.

C. SEE SINGLE LINE DIAGRAM FOR FEEDER WIRE AND CONDUIT SIZE. ALL CIRCUITS NOT SIZED ON DRAWING SHALL BE INSTALLED TO MEET MINIMUM SIZE REQUIRED BY NEC. ALL CONDUCTORS SHALL HAVE AN EQUIPMENT GROUND WIRE SIZED PER NEC.

D. FIELD VERIFY EXACT LOCATION OF ALL DEVICES AND EQUIPMENT PRIOR TO ROUGH IN.

E. ALL 120V, SINGLE PHASE, 15A AND 20A BRANCH CIRCUITS SUPPLYING OUTLETS OR DEVICES INSTALLED IN DWELLING UNIT KITCHENS, FAMILY ROOMS, DINING ROOMS, LIVING ROOMS, PARLORS, LIBRARIES, DENS, BEDROOMS, SUNROOMS, RECREATION ROOMS, CLOSETS, HALLWAYS, LAUNDRY AREAS, OR SIMILAR ROOMS OR AREAS SHALL BE PROTECTED BY A LISTED ARC-FAULT CIRCUIT INTERRUPTER, COMBINATION-TYPE INSTALLED TO PROVIDE PROTECTION OF THE BRANCH CIRCUIT AS REQUIRED BY NEC 210.12 AND LOCAL ORDINANCES.

F. ALL 125V, 15A AND 20A RECEPTACLES INSTALLED IN DWELLING UNITS SHALL BE LISTED TAMPER-RESISTANT AS REQUIRED BY NEC 406.12.

G. ALL SMOKE DETECTORS IN DWELLING UNITS SHALL BE INTERCONNECTED AND INSTALLED IN ACCORDANCE WITH NFPA 101, 2015 EDITION, SECTION 30.3.4.5.

H. ALL FIRE ALARM NOTIFICATION APPLIANCES LOCATED IN SLEEPING AREAS SHALL BE OF A LOW FREQUENCY SIGNAL TYPE IN ACCORDANCE WITH NFPA 72, 2014 EDITION, SECTION 18.4.5.3.

LAKE COUNTY BUILDING SERVICES
Any errors or omissions in these plans shall be made to conform with the applicable code requirements per Florida Building Code, in accordance with Section 107. Plans were reviewed for code compliance and shall be kept on job site.

RECEIVED FEB 14 2019

PERMIT REVIEW STAMP

ISSUE HISTORY

No.	Date	Description
1	02/08/2019	ISSUE FOR PERMIT

REVISION HISTORY

No.	Date	Description

© 2015 These documents and their contents are the property of FUGLEBERG KOCH, P.L.C. (A.B.N.2015), and are issued only for the specific project noted on these drawings. Any reproductions, revisions, or modifications of these documents without the expressed written consent of Fugleberg Koch, P.L.C. is prohibited by law.

FUGLEBERG KOCH
2555 Temple Trail, Winter Park, FL 32789 (407) 629-0595
www.fuglebergkoch.com BR569

CONSULTANT
Joseph, Lawrence & Co
Consulting Engineers
1180 HARWOOD AVE. SUITE 3000
ALTAMONTE SPRINGS, FLORIDA 32714
TEL: 321.972.4466
WWW.JLCENG.COM
CA NO. 28730

JLC 17.0137.00
BLAKE L. SUDDETH
LICENSE
NO. 69060
STATE OF FLORIDA
PROFESSIONAL ENGINEER
Blake Lawrence Suddeth
P.E. #: 69060

SUMMER BAY APTS. II	Drawn: MJR/KCM
LAKE COUNTY, FL	Checked: BLS/AJB
	Approved: BLS/AJB
	Date: 02/08/2019
	Project #: 5389

ENLARGED TYPICAL UNIT PLANS - ELECTRICAL

E4.01

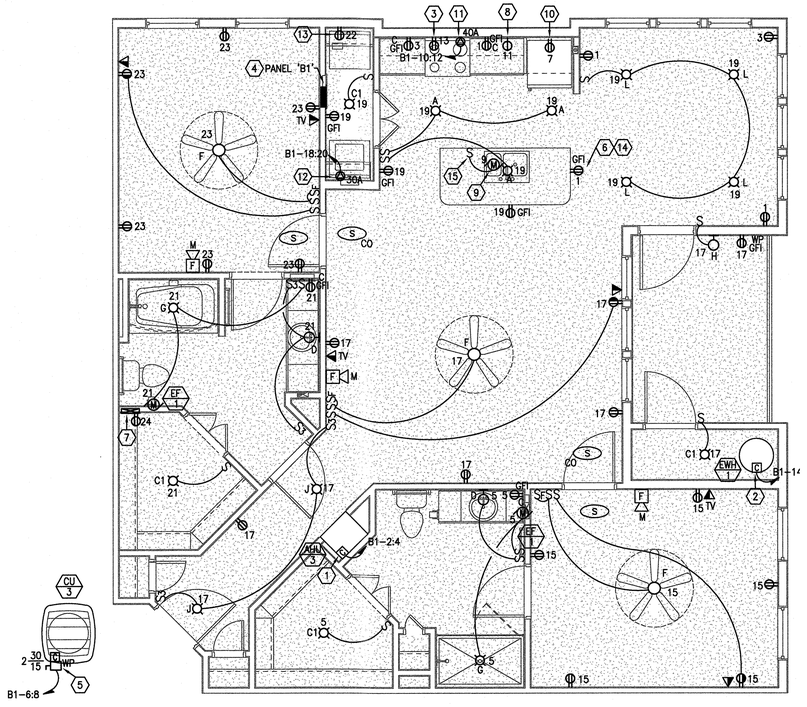

D1 ENLARGED TYPICAL UNIT TYPE 'B1' - ELECTRICAL

1/4" = 1'-0"

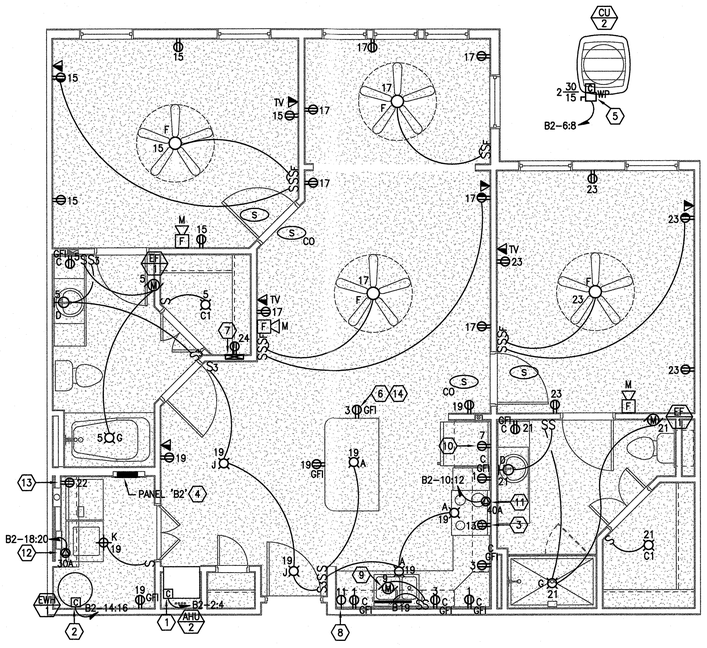

H1 ENLARGED TYPICAL UNIT TYPE 'B2S' - ELECTRICAL

1/4" = 1'-0"

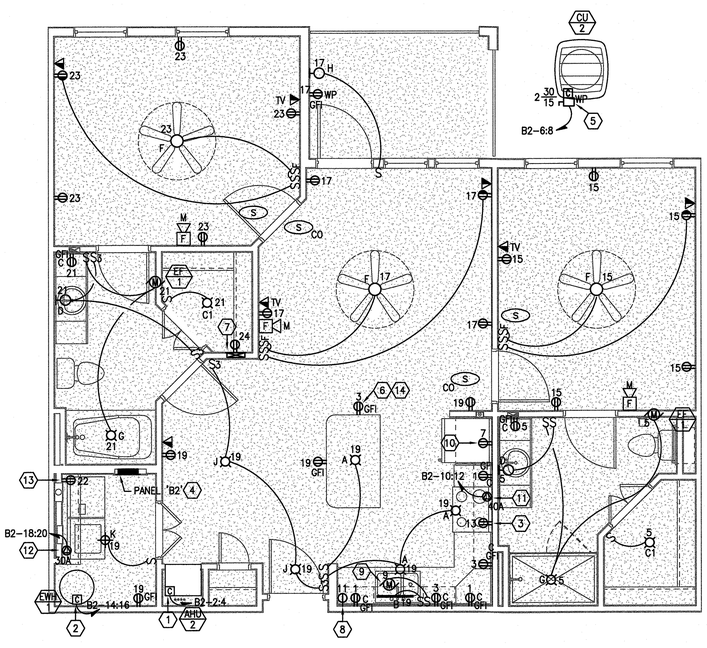

H5 ENLARGED TYPICAL UNIT TYPE 'B2' - ELECTRICAL

1/4" = 1'-0"

REFERENCE NOTES: ⓧ

1. CONNECT MECHANICAL UNIT VIA INTEGRAL DISCONNECT PROVIDED WITH UNIT. COORDINATE EXACT REQUIREMENTS WITH MECHANICAL CONTRACTOR PRIOR TO ROUGH-IN.
2. PROVIDE CIRCUIT BREAKER FEEDING WATER HEATER WITH "LOCK OUT" STYLE BREAKER HANDLE PER NEC 422.31.
3. PROVIDE 120V ELECTRICAL CONNECTION FOR MICROWAVE/HOOD CONNECTION. INSTALL RECEPTACLE AT 78"AFF INSIDE THE CABINET. COORDINATE LOCATION WITH MILLWORK INSTALLER PRIOR TO ROUGH-IN.
4. REFER TO POWER RISER DIAGRAM AND UNIT PANEL SCHEDULES FOR ADDITIONAL INFORMATION.
5. PROVIDE ELECTRICAL CONNECTION TO UNIT'S ASSOCIATED CONDENSING UNIT. COORDINATE LOCATION WITH MECHANICAL CONTRACTOR PRIOR TO ROUGH-IN. COORDINATE ROUTING OF CONDUIT THROUGH BUILDING WITH GENERAL CONTRACTOR PRIOR TO ROUGH-IN. INCREASE WIRE SIZE AS REQUIRED FOR CIRCUIT LENGTH PER FBC AND NEC.
6. PROVIDE COMBINATION 120V TAMPER RESISTANT RECEPTACLE AND USB CHARGER OUTLET (COOPER #TR7741 OR APPROVED SUBSTITUTION). COLOR AS SELECTED BY OWNER. PROVIDE JUNCTION BOX SIZED AS REQUIRED BY NEC AND MANUFACTURER FOR DEVICE. COORDINATE OUTLET LOCATION WITH OWNER PRIOR TO ROUGH-IN.
7. 12"x18"x3" DEEP FLUSH MOUNTED CABINET WITH DOOR FOR TELEPHONE AND TV CABLE TERMINATIONS. "NTC" CABINET. COORDINATE EXACT LOCATION WITH ALL TRADES PRIOR TO ROUGH-IN. CONTRACTOR TO PULL AND LABEL ALL LINES IN STAR CONFIGURATION.
8. PROVIDE 120V CONNECTION FOR DISHWASHER. COORDINATE CONNECTION REQUIREMENTS AND LOCATION WITH EQUIPMENT INSTALLER PRIOR TO ROUGH-IN.
9. PROVIDE 120V CONNECTION FOR GARBAGE DISPOSAL. COORDINATE CONNECTION REQUIREMENTS AND LOCATION WITH EQUIPMENT INSTALLER PRIOR TO ROUGH-IN.
10. PROVIDE 120V OUTLET FOR REFRIGERATOR, 48"AFF.
11. PROVIDE 240V/40A/1ϕ OUTLET FOR RANGE. COORDINATE PLUG CONFIGURATION AND LOCATION WITH EQUIPMENT INSTALLER PRIOR TO ROUGH-IN.
12. PROVIDE 240V/30A/1ϕ OUTLET FOR DRYER. COORDINATE PLUG CONFIGURATION AND LOCATION WITH EQUIPMENT INSTALLER PRIOR TO ROUGH-IN.
13. PROVIDE 120V OUTLET FOR WASHER, 36"AFF.
14. LOCATE 120V RECEPTACLE IN LOW WALL BELOW COUNTER HEIGHT. COORDINATE LOCATION WITH OWNER PRIOR TO ROUGH-IN. PER NEC 210.52(C)(5)
15. INSTALL SWITCH INSIDE OF CABINET. COORDINATE INSTALLATION WITH MANUFACTURER'S INSTRUCTIONS AND MILLWORK INSTALLER PRIOR TO ROUGH-IN.

GENERAL NOTES:

A. DO NOT SCALE ELECTRICAL DRAWINGS FOR ANY DIMENSIONS.

B. ALL WORK SHALL COMPLY WITH THE 2014 NATIONAL ELECTRIC CODE, NATIONAL, STATE AND LOCAL CODES. PROVIDE GROUNDING AND BONDING PER NEC 250.

C. SEE SINGLE LINE DIAGRAM FOR FEEDER WIRE AND CONDUIT SIZE. ALL CIRCUITS NOT SIZED ON DRAWING SHALL BE INSTALLED TO MEET MINIMUM SIZE REQUIRED BY NEC. ALL CONDUCTORS SHALL HAVE AN EQUIPMENT GROUND WIRE SIZED PER NEC.

D. FIELD VERIFY EXACT LOCATION OF ALL DEVICES AND EQUIPMENT PRIOR TO ROUGH IN.

E. ALL 120V, SINGLE PHASE, 15A AND 20A BRANCH CIRCUITS SUPPLYING OUTLETS OR DEVICES INSTALLED IN DWELLING UNIT KITCHENS, FAMILY ROOMS, DINING ROOMS, LIVING ROOMS, PARLORS, LIBRARIES, DENS, BEDROOMS, SUNROOMS, RECREATION ROOMS, CLOSETS, HALLWAYS, LAUNDRY AREAS, OR SIMILAR ROOMS OR AREAS SHALL BE PROTECTED BY A LISTED ARC-FAULT CIRCUIT INTERRUPTER, COMBINATION-TYPE INSTALLED TO PROVIDE PROTECTION OF THE BRANCH CIRCUIT AS REQUIRED BY NEC 210.12 AND LOCAL ORDINANCES.

F. ALL 125V, 15A AND 20A RECEPTACLES INSTALLED IN DWELLING UNITS SHALL BE LISTED TAMPER-RESISTANT AS REQUIRED BY NEC 406.12.

G. ALL SMOKE DETECTORS IN DWELLING UNITS SHALL BE INTERCONNECTED AND INSTALLED IN ACCORDANCE WITH NFPA 101, 2015 EDITION, SECTION 30.3.4.5.

H. ALL FIRE ALARM NOTIFICATION APPLIANCES LOCATED IN SLEEPING AREAS SHALL BE OF A LOW FREQUENCY SIGNAL TYPE IN ACCORDANCE WITH NFPA 72, 2014 EDITION, SECTION 18.4.5.3.

LAKE COUNTY BUILDING SERVICES
Any errors or omissions in these plans shall be made to conform with the applicable code requirements per Florida Building Code, in accordance with Section 107. Plans were reviewed for code compliance and shall be kept on job site.

RECEIVED FEB 14 2019

PERMIT REVIEW STAMP

ISSUE HISTORY

No.	Date	Description
1	02/08/2019	ISSUE FOR PERMIT

REVISION HISTORY

No.	Date	Description

© 2019 These plans/ideas and their contents are the property of FUGLEBERG KOCH, P.A.C.-A.E.P.D.P.S.P., and are issued only for the specific project shown on these drawings. Any reproductions, revisions, or modifications of these documents without the expressed written consent of Fugleberg Koch, P.A.C.-A.E.P.D.P.S.P. is prohibited by law.

FUGLEBERG KOCH
2535 Temple Trail, Winter Park, FL 32789 (407) 629-0595
www.fuglebergkoch.com BR569

CONSULTANT
Joseph, Lawrence & Co
Consulting Engineers
1180 HARWOOD AVE. SUITE 3000
ALTAMONTE SPRINGS, FLORIDA 32714
TEL. 321.972.4466
WWW.JLCENG.COM
CA NO. 28730

JLC 17.0137.00
Blake Lawrence Suddeth
P.E. #: 69060

SUMMER BAY APTS. II
LAKE COUNTY, FL

Drawn:	MJR/KCM
Checked:	BLS/AJB
Approved:	BLS/AJB
Date:	02/08/2019
Project #:	5389

ENLARGED TYPICAL UNIT PLANS - ELECTRICAL

E4.02

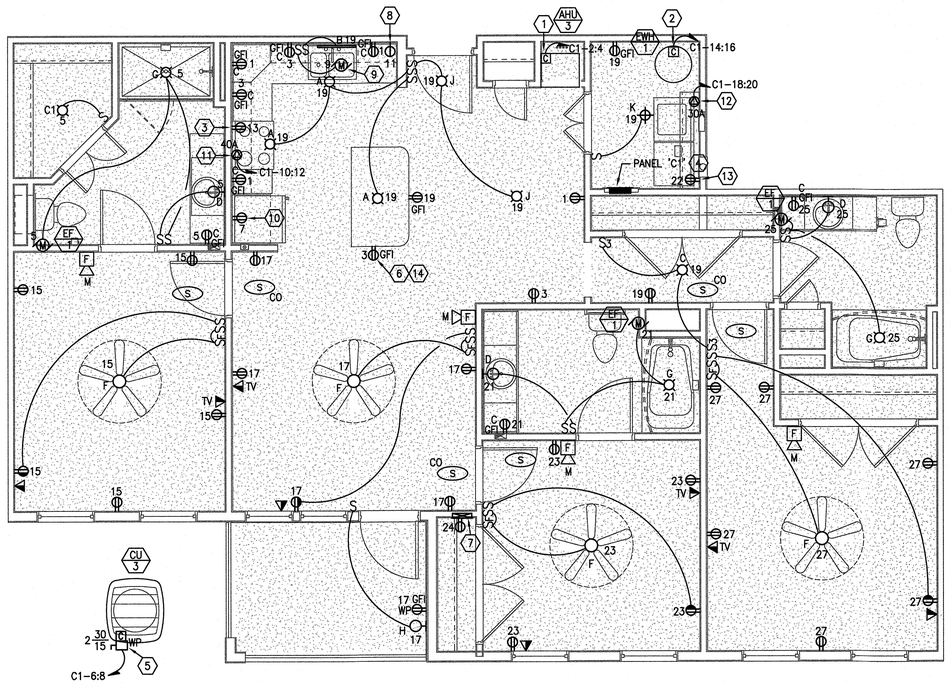

F4 ENLARGED TYPICAL UNIT TYPE 'C1' - ELECTRICAL
1/4" = 1'-0"

GENERAL NOTES:

A. DO NOT SCALE ELECTRICAL DRAWINGS FOR ANY DIMENSIONS.

B. ALL WORK SHALL COMPLY WITH THE 2014 NATIONAL ELECTRIC CODE, NATIONAL, STATE AND LOCAL CODES. PROVIDE GROUNDING AND BONDING PER NEC 250.

C. SEE SINGLE LINE DIAGRAM FOR FEEDER WIRE AND CONDUIT SIZE. ALL CIRCUITS NOT SIZED ON DRAWING SHALL BE INSTALLED TO MEET MINIMUM SIZE REQUIRED BY NEC. ALL CONDUCTORS SHALL HAVE AN EQUIPMENT GROUND WIRE SIZED PER NEC.

D. FIELD VERIFY EXACT LOCATION OF ALL DEVICES AND EQUIPMENT PRIOR TO ROUGH IN.

E. ALL 120V, SINGLE PHASE, 15A AND 20A BRANCH CIRCUITS SUPPLYING OUTLETS OR DEVICES INSTALLED IN DWELLING UNIT KITCHENS, FAMILY ROOMS, DINING ROOMS, LIVING ROOMS, PARLORS, LIBRARIES, DENS, BEDROOMS, SUNROOMS, RECREATION ROOMS, CLOSETS, HALLWAYS, LAUNDRY AREAS, OR SIMILAR ROOMS OR AREAS SHALL BE PROTECTED BY A LISTED ARC-FAULT CIRCUIT INTERRUPTER, COMBINATION-TYPE INSTALLED TO PROVIDE PROTECTION OF THE BRANCH CIRCUIT AS REQUIRED BY NEC 210.12 AND LOCAL ORDINANCES.

F. ALL 125V, 15A AND 20A RECEPTACLES INSTALLED IN DWELLING UNITS SHALL BE LISTED TAMPER-RESISTANT AS REQUIRED BY NEC 406.12.

G. ALL SMOKE DETECTORS IN DWELLING UNITS SHALL BE INTERCONNECTED AND INSTALLED IN ACCORDANCE WITH NFPA 101, 2015 EDITION, SECTION 30.3.4.5.

H. ALL FIRE ALARM NOTIFICATION APPLIANCES LOCATED IN SLEEPING AREAS SHALL BE OF A LOW FREQUENCY SIGNAL TYPE IN ACCORDANCE WITH NFPA 72, 2014 EDITION, SECTION 18.4.5.3.

REFERENCE NOTES: ⓧ

1. CONNECT MECHANICAL UNIT VIA INTEGRAL DISCONNECT PROVIDED WITH UNIT. COORDINATE EXACT REQUIREMENTS WITH MECHANICAL CONTRACTOR PRIOR TO ROUGH-IN.
2. PROVIDE CIRCUIT BREAKER FEEDING WATER HEATER WITH "LOCK OUT" STYLE BREAKER HANDLE PER NEC 422.31.
3. PROVIDE 120V ELECTRICAL CONNECTION FOR MICROWAVE/HOOD CONNECTION. INSTALL RECEPTACLE AT 78"AFF INSIDE THE CABINET. COORDINATE LOCATION WITH MILLWORK INSTALLER PRIOR TO ROUGH-IN.
4. REFER TO POWER RISER DIAGRAM AND UNIT PANEL SCHEDULES FOR ADDITIONAL INFORMATION.
5. PROVIDE ELECTRICAL CONNECTION TO UNIT'S ASSOCIATED CONDENSING UNIT. COORDINATE LOCATION WITH MECHANICAL CONTRACTOR PRIOR TO ROUGH-IN. COORDINATE ROUTING OF CONDUIT THROUGH BUILDING WITH GENERAL CONTRACTOR PRIOR TO ROUGH-IN. INCREASE WIRE SIZE AS REQUIRED FOR CIRCUIT LENGTH PER FBC AND NEC.
6. PROVIDE COMBINATION 120V TAMPER RESISTANT RECEPTACLE AND USB CHARGER OUTLET (COOPER #TR7741 OR APPROVED SUBSTITUTION). COLOR AS SELECTED BY OWNER. PROVIDE JUNCTION BOX SIZED AS REQUIRED BY NEC AND MANUFACTURER FOR DEVICE. COORDINATE OUTLET LOCATION WITH OWNER PRIOR TO ROUGH-IN.
7. 12"x18"x3" DEEP FLUSH MOUNTED CABINET WITH DOOR FOR TELEPHONE AND TV CABLE TERMINATIONS. "NTC" CABINET. COORDINATE EXACT LOCATION WITH ALL TRADES PRIOR TO ROUGH-IN. CONTRACTOR TO PULL AND LABEL ALL LINES IN STAR CONFIGURATION.
8. PROVIDE 120V CONNECTION FOR DISHWASHER. COORDINATE CONNECTION REQUIREMENTS AND LOCATION WITH EQUIPMENT INSTALLER PRIOR TO ROUGH-IN.
9. PROVIDE 120V CONNECTION FOR GARBAGE DISPOSAL. COORDINATE CONNECTION REQUIREMENTS AND LOCATION WITH EQUIPMENT INSTALLER PRIOR TO ROUGH-IN.
10. PROVIDE 120V OUTLET FOR REFRIGERATOR, 48"AFF.
11. PROVIDE 240V/40A/1ø OUTLET FOR RANGE. COORDINATE PLUG CONFIGURATION AND LOCATION WITH EQUIPMENT INSTALLER PRIOR TO ROUGH-IN.
12. PROVIDE 240V/30A/1ø OUTLET FOR DRYER. COORDINATE PLUG CONFIGURATION AND LOCATION WITH EQUIPMENT INSTALLER PRIOR TO ROUGH-IN.
13. PROVIDE 120V OUTLET FOR WASHER, 36"AFF.
14. LOCATE 120V RECEPTACLE IN LOW WALL BELOW COUNTER HEIGHT. COORDINATE LOCATION WITH OWNER PRIOR TO ROUGH-IN. PER NEC 210.52(C)(5)

LAKE COUNTY BUILDING SERVICES
Any errors or omissions in these plans shall be made to conform with the applicable code requirements per Florida Building Code, in accordance with Section 107. Plans were reviewed for code compliance and shall be kept on job site.

RECEIVED FEB 14 2019

PERMIT REVIEW STAMP

ISSUE HISTORY

No.	Date	Description
1	02/08/2019	ISSUE FOR PERMIT

REVISION HISTORY

No.	Date	Description

© 2013 These documents and the content are the property of FUGLEBERG KOCH, PLLC. All rights reserved. Any reproductions, revisions, or modifications of these documents without the expressed written consent of Fugleberg Koch, PLLC is prohibited by law.

FUGLEBERG KOCH
2555 Temple Trail, Winter Park, FL 32789 (407) 629-0595
www.fuglebergkoch.com BR569

CONSULTANT
Joseph, Lawrence & Co
Consulting Engineers
1180 HARWOOD AVE. SUITE 3000
ALTAMONTE SPRINGS, FLORIDA 32714
TEL: 321.972.4466
WWW.JLCENG.COM
CA NO. 28730

JLC 17.0137.00

BLAKE L. SUDDETH LICENSE No. 69060 STATE OF FLORIDA PROFESSIONAL ENGINEER

Blake Lawrence Suddeth
P.E. #: 69060

Drawn:	MJR/KCM
Checked:	BLS/AJB
Approval:	BLS/AJB
Date:	02/08/2019
Project #:	5389

SUMMER BAY APTS. II
LAKE COUNTY, FL

ENLARGED TYPICAL UNIT PLANS - ELECTRICAL

E4.03

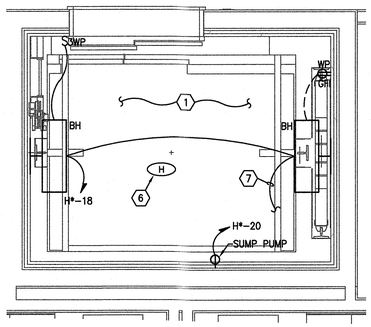

C1 ENLARGED PLAN - TYPICAL FIRST FLOOR ELEVATOR - BLDG. TYPE I
1/2" = 1'-0"

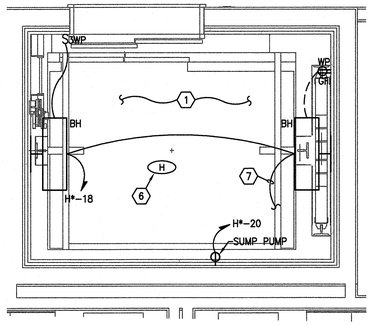

C5 ENLARGED PLAN - TYPICAL FIRST FLOOR ELEVATOR - BLDG. TYPE II
1/2" = 1'-0"

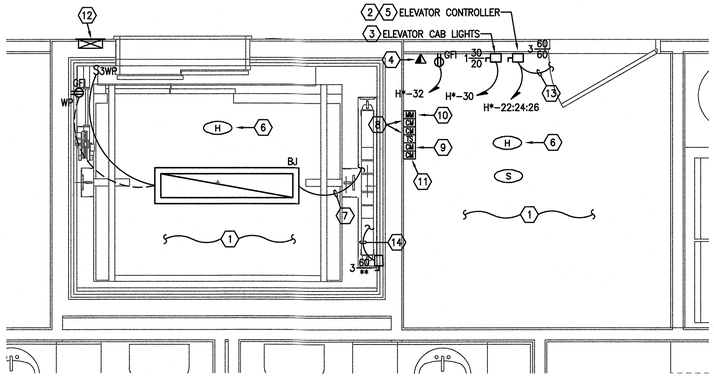

E1 ENLARGED PLAN - TYPICAL FOURTH FLOOR ELEVATOR - BLDG. TYPE I
1/2" = 1'-0"

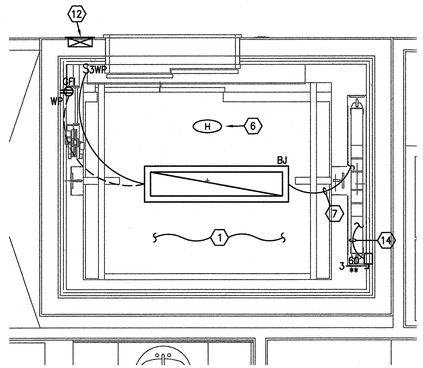

E5 ENLARGED PLAN - TYPICAL FOURTH FLOOR ELEVATOR - BLDG. TYPE II
1/2" = 1'-0"

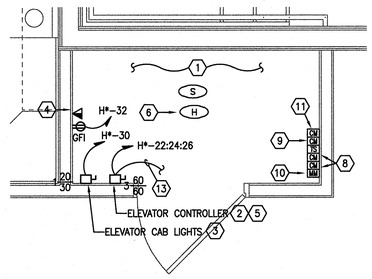

G5 ENLARGED PLAN - FOURTH FLOOR EQUIP. ROOM - BLDG. TYPE II
1/2" = 1'-0"

LAKE COUNTY BUILDING SERVICES
Any errors or omissions in these plans shall be made to conform with the applicable code requirements per Florida Building Code, in accordance with Section 107. Plans were reviewed for code compliance and shall be kept on job site.

RECEIVED FEB 14 2019

GENERAL NOTES:

A. DO NOT SCALE ELECTRICAL DRAWINGS FOR ANY DIMENSIONS.

B. ALL WORK SHALL COMPLY WITH THE 2014 NATIONAL ELECTRIC CODE, NATIONAL, STATE AND LOCAL CODES. PROVIDE GROUNDING AND BONDING PER NEC 250.

C. SEE SINGLE LINE DIAGRAM FOR FEEDER WIRE AND CONDUIT SIZE. ALL CIRCUITS NOT SIZED ON DRAWING SHALL BE INSTALLED TO MEET MINIMUM SIZE REQUIRED BY NEC. ALL CONDUCTORS SHALL HAVE AN EQUIPMENT GROUND WIRE SIZED PER NEC.

D. FIELD VERIFY EXACT LOCATION OF ALL DEVICES AND EQUIPMENT PRIOR TO ROUGH IN.

REFERENCE NOTES: ⟨X⟩

⟨1⟩ REFER TO ELEVATOR SHOP DRAWINGS FOR EXACT LOCATIONS OF ELECTRICAL WORK IN ELEVATOR PIT AND MACHINE ROOM. PROVIDE CONNECTION SWITCHES, LIGHTS AND RECEPTACLES AS PER NEC 620.23 AND 24. CONNECT FIRE ALARM AND TELEPHONE DEVICES IN ELEVATOR SHAFT LOBBY AND EQUIPMENT ROOM PER STATE FIRE MARSHALL REQUIREMENTS.

⟨2⟩ PROVIDE LOCKABLE RK5 DISCONNECT SWITCH WITH 20A AUXILIARY CONTACTS, REJECTION CLIPS AND RK5 FUSES AS REQUIRED BY ELEVATOR INSTALLER. CONNECT ELEVATOR CONTROLLER. REFER TO PANEL SCHEDULES FOR ADDITIONAL INFORMATION.

⟨3⟩ 30A, 120V LOCKABLE DISCONNECT SWITCH WITH REJECTION CLIPS AND 20A RK5 FUSE. LABEL "ELEVATOR CAB LIGHTS". CONNECT ELEVATOR CONTROLLERS: (2)#12 AND (1)#12 GND. IN 1/2"C.

⟨4⟩ ELEVATOR CAB TELEPHONE. COORDINATE WITH ELEVATOR CONTRACTOR PRIOR TO ROUGH-IN.

⟨5⟩ COORDINATE DISCONNECT SIZE, BREAKER SIZE, AND CONDUIT/CONDUCTOR SIZING WITH APPROVED ELEVATOR SHOP DRAWINGS AND PROVIDE AS REQUIRED.

⟨6⟩ MOUNT HEAT DETECTOR WITHIN 24" OF FIRE PROTECTION SPRINKLER HEAD. FIELD COORDINATE PRIOR TO ROUGH-IN.

⟨7⟩ CONNECT ELEVATOR SHAFT LIGHTING ON TOP FLOOR TO ELEVATOR PIT LIGHTING ON FIRST FLOOR. FIXTURES TO BE CONTROLLED BY 3-WAY SWITCH AS SHOWN ON PLANS.

⟨8⟩ ELEVATOR RECALL CONTROL MODULES. COORDINATE WITH ELEVATOR CONTRACTOR PRIOR TO ROUGH-IN.

⟨9⟩ ELEVATOR POWER SHUTDOWN CONTROL MODULE.

⟨10⟩ ELEVATOR POWER SHUTDOWN CONTROL CIRCUIT SUPERVISORY MONITOR MODULE.

⟨11⟩ ELEVATOR PHASE 1 EMERGENCY RECALL VISUAL SIGNAL CONTROL MODULE. COORDINATE TERMINATION REQUIREMENTS WITH ELEVATOR CONTROLLER.

⟨12⟩ PROVIDE AREA OF REFUGE TWO-WAY COMMUNICATION SYSTEM AND CABLING TO MAIN BASE STATION AS REQUIRED BY 2014 5TH EDITION FBC, 2010 FFPC, AND 2012 NFPA 101 LIFE SAFETY CODE. COORDINATE LOCATION WITH OWNER AND AUTHORITY HAVING JURISDICTION PRIOR TO ROUGH-IN.

⟨13⟩ TO NON-FUSED 60A/3P DISCONNECT LOCATED AT TOP OF ELEVATOR SHAFT. PROVIDE (3)#6 AWG CU. AND (1)#10 AWG CU. GND. IN 1"C. AS REQUIRED.

⟨14⟩ PROVIDE 60A/3P, NON-FUSED DISCONNECT SWITCH AT TOP OF ELEVATOR SHAFT FOR CONNECTION OF ELEVATOR MOTOR. COORDINATE LOCATION AND CONNECTION REQUIREMENTS WITH ELEVATOR MANUFACTURER SHOP DRAWINGS AND INSTALLER PRIOR TO ROUGH-IN. MAINTAIN ALL NEC REQUIRED CLEARANCES FOR DISCONNECT SWITCH.

PERMIT REVIEW STAMP

ISSUE HISTORY

No.	Date	Description
1	02/08/2019	ISSUE FOR PERMIT

REVISION HISTORY

No.	Date	Description

These documents and the ideas and designs incorporated herein, as an instrument of service, are the property of FUGLEBERG KOCH, PLLC - LB3900765, and are intended only for the specific project noted on these drawings. Any reproductions, revisions, or modifications of these documents without the expressed written consent of Fugleberg Koch, PLLC is prohibited by law.
© 2019

FUGLEBERG KOCH
2555 Temple Trail, Winter Park, FL 32789 (407) 629-0595
www.fuglebergkoch.com BR569

CONSULTANT
Joseph, Lawrence & Co
Consulting Engineers
1180 HARWOOD AVE. SUITE 3000
ALTAMONTE SPRINGS, FLORIDA 32714
TEL: 321.972.4466
WWW.JLCENG.COM
CA NO. 28730

JLC 17.0137.00

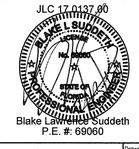

Blake Lawrence Suddeth
P.E. #: 68060

Drawn:	MJR/KCM
Checked:	BLS/AJB
Approval:	BLS/AJB
Date:	02/08/2019
Project #:	5389

SUMMER BAY APTS. II
LAKE COUNTY, FL

ENLARGED PLANS - ELEVATORS

E4.04

CONDUIT & CONDUCTOR SIZES: ⓧ

(A) 4 SETS [(4)#400 kcmil AL., 4"C.]

(B) (3)#2/0 AWG AL., (1)#4 AWG AL. GND., SER CABLE

GENERAL NOTES:

A. DO NOT SCALE ELECTRICAL DRAWING FOR ANY DIMENSIONS.

B. ALL WORK SHALL COMPLY WITH THE 2014 NATIONAL ELECTRIC CODE, NATIONAL, STATE AND LOCAL CODES. PROVIDE GROUNDING AND BONDING PER NEC 250

C. COORDINATE ALL WORK WITH LOCAL UTILITY COMPANY.

D. SERVICE EQUIPMENT IN OTHER THAN DWELLING UNITS MUST BE LEGIBLY FIELD MARKED WITH THE MAXIMUM AVAILABLE FAULT CURRENT, INCLUDING THE DATE THE FAULT CURRENT CALCULATIONS WAS PREFORMED AND BE OF SUFFICIENT DURABILITY TO WITHSTAND THE ENVIRONMENT INVOLVED IN ACCORDANCE WITH NEC 110.24.

NOTE:
PER FEC C405.6.3 (2017 ED) ALL CONDUCTORS FOR FEEDERS AND BRANCH CIRCUITS ARE DESIGNED FOR A MAXIMUM OF 5% VOLTAGE DROP TOTAL.

REFERENCE NOTES: ⓧ

1. REFER TO CIVIL DRAWINGS FOR LOCATION OF UTILITY TRANSFORMER.
2. COORDINATE ALL REQUIREMENTS WITH LOCAL UTILITY COMPANY PRIOR TO ROUGH-IN AND PROVIDE AS REQUIRED.
3. COORDINATE ROUTING OF SERVICE ENTRANCE RATED CABLE WITH GENERAL CONTRACTOR AND ARCHITECT PRIOR TO ROUGH-IN. PROVIDE UNDERGROUND RATED CALBE WHERE REQUIRED.
4. COORDINATE LOCATION WITH CIVIL DRAWINGS, OWNER AND UTILITY COMPANY PRIOR TO ROUGH-IN. PROVIDE METER LABELING AS REQUIRED BY UTILITY COMPANY.
5. PROVIDE HARD WIRED SURGE PROTECTIVE DEVICE OF SAME MANUFACTURER AS PANEL/METER CENTER.
6. COORDINATE LOCATION OF BUILDING SHUNT TRIP WITH OWNER AND LOCAL AUTHORITY HAVING JURISDICTION PRIOR TO ROUGH-IN.
7. ELECTRICAL CONTRACTOR SHALL PROVIDE PERMANENT PLACARD DENOTING ALL OTHER SERVICE LOCATIONS SUPPLYING THIS BUILDING AS REQUIRED BY NEC 230.2(E).

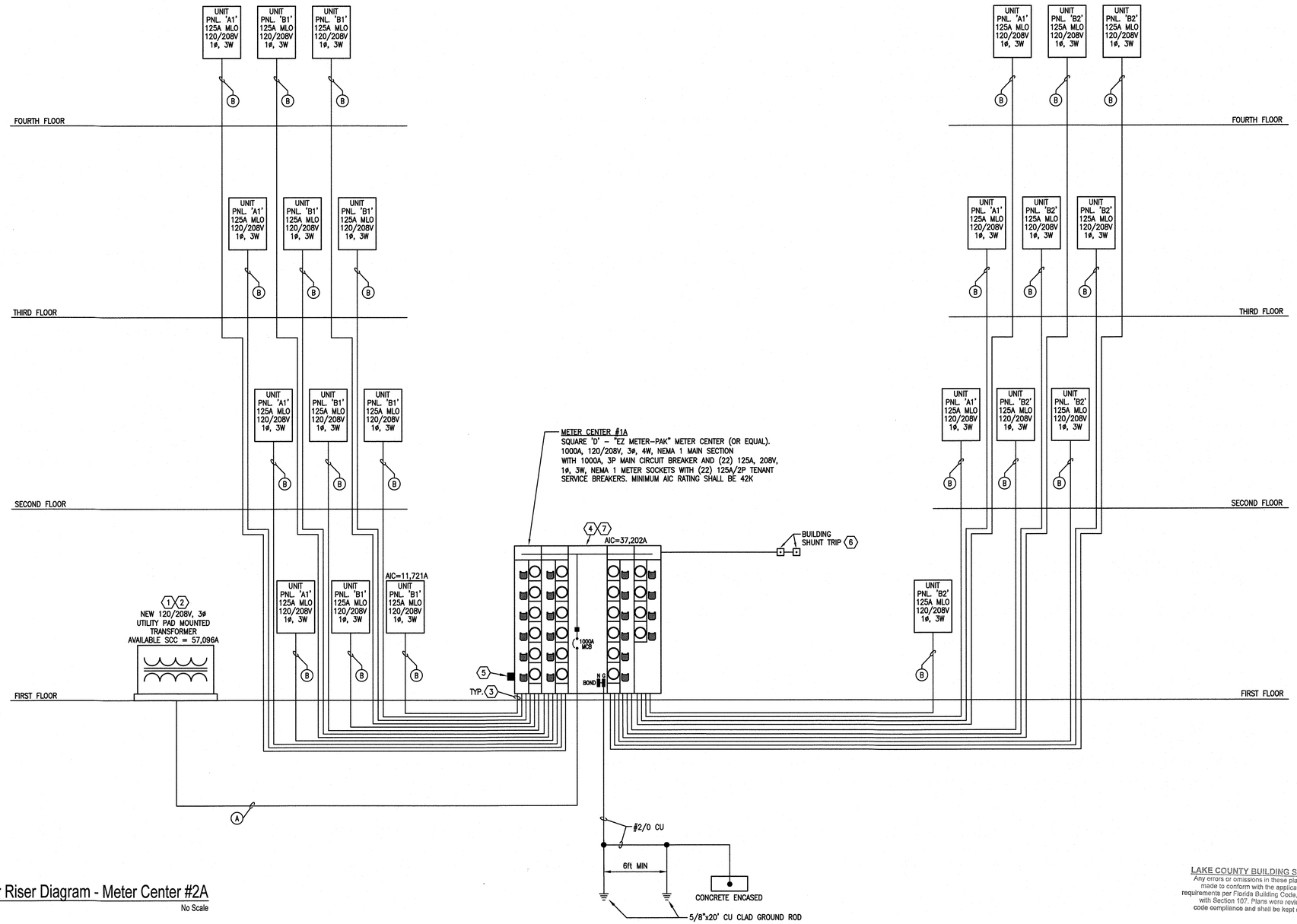

H1 Power Riser Diagram - Meter Center #2A
No Scale

LAKE COUNTY BUILDING SERVICES
Any errors or omissions in these plans shall be made to conform with the applicable code requirements per Florida Building Code, in accordance with Section 107. Plans were reviewed for code compliance and shall be kept on job site.

RECEIVED FEB 14 2019

PERMIT REVIEW STAMP

ISSUE HISTORY

No.	Date	Description
1	02/08/2019	ISSUE FOR PERMIT

REVISION HISTORY

No.	Date	Description

FUGLEBERG KOCH
2555 Temple Trail, Winter Park, FL 32789 (407) 629-0595
www.fuglebergkoch.com BR569

CONSULTANT
Joseph, Lawrence & Co
Consulting Engineers
1180 HARWOOD AVE. SUITE 3000
ALTAMONTE SPRINGS, FLORIDA 32714
TEL: 321.972.4466
WWW.JLCENG.COM
CA NO. 28730

JLC 17.0137.00

Blake Lawrence Suddeth
P.E. #: 69060

SUMMER BAY APTS. II
LAKE COUNTY, FL

Drawn:	MJR/KCM
Checked:	BLS/AJB
Approval:	BLS/AJB
Date:	02/08/2019
Project #:	5389

RISER DIAGRAMS - ELECTRICAL

E5.03

© 2015 These documents and their contents are the property of FUGLEBERG KOCH, PLLC - AA26002103, and are issued only for the specific project noted on these drawings. Any reproductions, revisions, or modifications of these documents without the expressed written consent of Fugleberg Koch, PLLC is prohibited by law.

CONDUIT & CONDUCTOR SIZES: (X)

(A) 4 SETS [(4)#500 kcmil AL., 4"C.]

(B) (3)#2/0 AWG AL., (1)#4 AWG AL. GND., SER CABLE

(C) (4)#500 kcmil AL., (1)#2 AWG AL. GND., IN 4"C.

GENERAL NOTES:

A. DO NOT SCALE ELECTRICAL DRAWING FOR ANY DIMENSIONS.

B. ALL WORK SHALL COMPLY WITH THE 2014 NATIONAL ELECTRIC CODE, NATIONAL, STATE AND LOCAL CODES. PROVIDE GROUNDING AND BONDING PER NEC 250

C. COORDINATE ALL WORK WITH LOCAL UTILITY COMPANY.

D. SERVICE EQUIPMENT IN OTHER THAN DWELLING UNITS MUST BE LEGIBLY FIELD MARKED WITH THE MAXIMUM AVAILABLE FAULT CURRENT, INCLUDING THE DATE THE FAULT CURRENT CALCULATIONS WAS PREFORMED AND BE OF SUFFICIENT DURABILITY TO WITHSTAND THE ENVIRONMENT INVOLVED IN ACCORDANCE WITH NEC 110.24.

NOTE:
PER FEC C405.6.3 (2017 ED) ALL CONDUCTORS FOR FEEDERS AND BRANCH CIRCUITS ARE DESIGNED FOR A MAXIMUM OF 5% VOLTAGE DROP TOTAL.

REFERENCE NOTES: (X)

1. REFER TO CIVIL DRAWINGS FOR LOCATION OF UTILITY TRANSFORMER.
2. COORDINATE ALL REQUIREMENTS WITH LOCAL UTILITY COMPANY PRIOR TO ROUGH-IN AND PROVIDE AS REQUIRED.
3. COORDINATE ROUTING OF SERVICE ENTRANCE RATED CABLE WITH GENERAL CONTRACTOR AND ARCHITECT PRIOR TO ROUGH-IN. PROVIDE UNDERGROUND RATED CALBE WHERE REQUIRED.
4. COORDINATE LOCATION WITH CIVIL DRAWINGS, OWNER AND UTILITY COMPANY PRIOR TO ROUGH-IN. PROVIDE METER LABELING AS REQUIRED BY UTILITY COMPANY.
5. PROVIDE HARD WIRED SURGE PROTECTIVE DEVICE OF SAME MANUFACTURER AS PANEL/METER CENTER.
6. COORDINATE LOCATION OF BUILDING SHUNT TRIP WITH OWNER AND LOCAL AUTHORITY HAVING JURISDICTION PRIOR TO ROUGH-IN.
7. ELECTRICAL CONTRACTOR SHALL PROVIDE PERMANENT PLACARD DENOTING ALL OTHER SERVICE LOCATIONS SUPPLYING THIS BUILDING AS REQUIRED BY NEC 230.2(E).

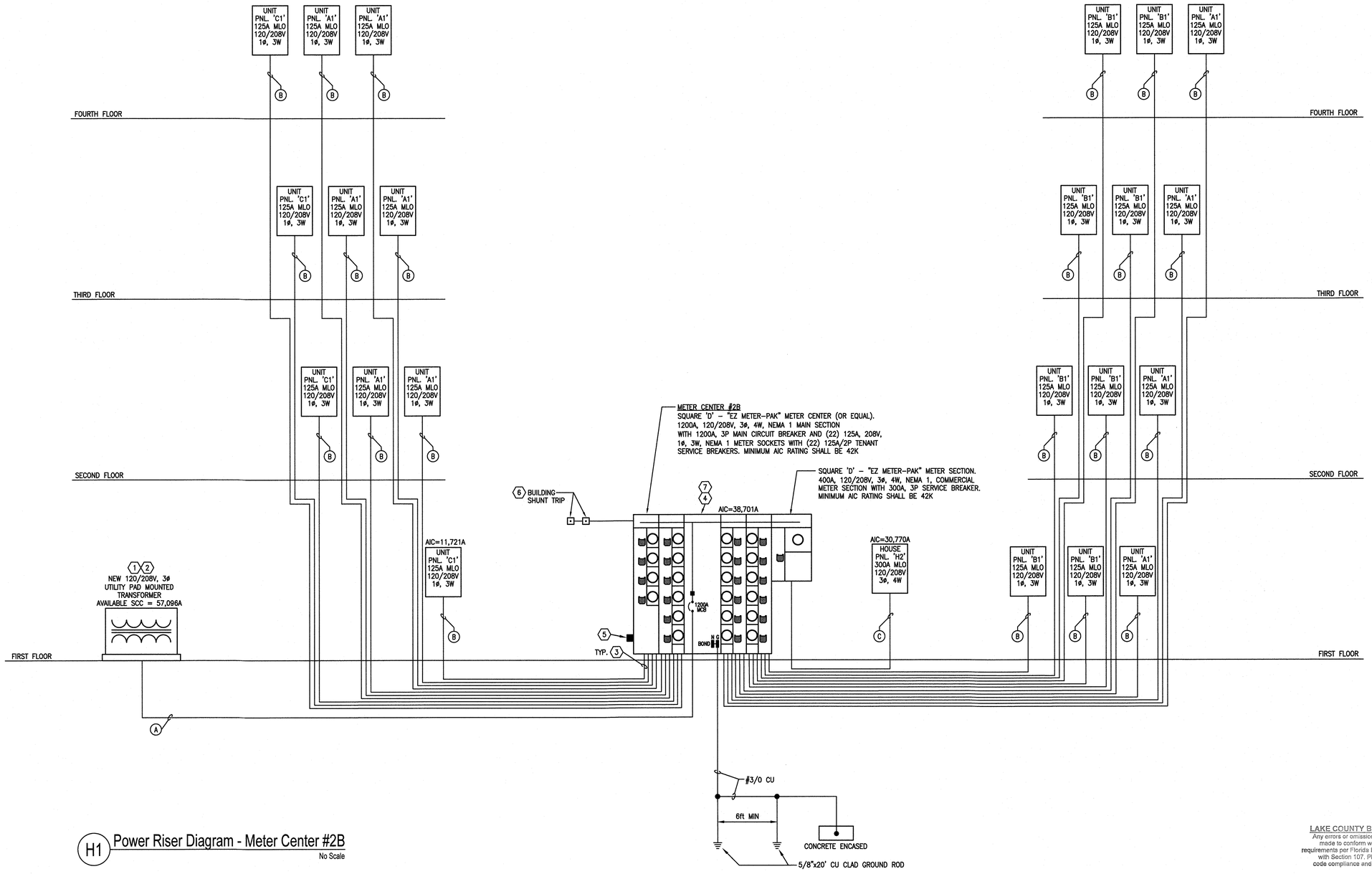

H1 Power Riser Diagram - Meter Center #2B
No Scale

LAKE COUNTY BUILDING SERVICES
Any errors or omissions in these plans shall be made to conform with the applicable code requirements per Florida Building Code, in accordance with Section 107. Plans were reviewed for code compliance and shall be kept on job site.

RECEIVED FEB 14 2019

PERMIT REVIEW STAMP

ISSUE HISTORY

No.	Date	Description
1	02/08/2019	ISSUE FOR PERMIT

REVISION HISTORY

No.	Date	Description

FUGLEBERG KOCH
2555 Temple Trail, Winter Park, FL 32789 (407) 629-0595
www.fuglebergkoch.com BR569

CONSULTANT
Joseph, Lawrence & Co Consulting Engineers
1180 HARWOOD AVE. SUITE 3000
ALTAMONTE SPRINGS, FLORIDA 32714
TEL 321.972.4466
WWW.JLCENG.COM
CA NO. 28730

JLC 17.0127.00

BLAKE L. SUDDETH — No. 69060 — STATE OF FLORIDA — PROFESSIONAL ENGINEER

Blake Lawrence Suddeth
P.E. #: 69060

Drawn:	MJR/KCM
Checked:	BLS/AJB
Approval:	BLS/AJB
Date:	02/08/2019
Project #:	5389

SUMMER BAY APTS. II
LAKE COUNTY, FL

RISER DIAGRAMS - ELECTRICAL

E5.04

© 2019 These documents are and shall remain the property of FUGLEBERG KOCH, PLLC - 14350(2019) and are issued only for the specific project noted on these drawings. Any reproductions, revisions, or modifications of these documents without the expressed written consent of Fugleberg Koch, PLLC is prohibited by law.

RESIDENTIAL UNIT TYPE S1
ELECTRICAL SERVICE LOAD SUMMARY

620	SQUARE FT. x 3 VA	=	1,860 VA		(GENERAL LIGHTING/RECEPTACLE LOAD)
1,500	VA x 2	=	3,000 VA		(SMALL APPLIANCE LOAD)
1,500	VA x 1	=	1,500 VA		(WASHING MACHNE)
5,000	VA x 1	=	5,000 VA		(ELECTRIC DRYER)
4,500	VA x 1	=	4,500 VA		(ELECTRIC WATER HEATER)
1,200	VA x 1	=	1,200 VA		(DISHWASHER)
800	VA x 1	=	800 VA		(DISPOSAL)
840	VA x 1	=	840 VA		(REFRIGERATOR)
1,200	VA x 1	=	1,200 VA		(MICROVAVE/HOOD)
8,000	VA x 1	=	8,000 VA		(ELECTRIC RANGE/OVEN)
	CONNECTED GENERAL LOAD	=	27,900 VA		
	CONNECT HEAT/AC LOAD	=	5,696 VA		(PER NEC 220.82)
	TOTAL CONNECTED LOAD	=	33,596 VA		
	TOTAL DEMAND LOAD	=	22,856 VA		(PER NEC 220.82)
	TOTAL DEMAND AMPS	=	109.88 AMPS		110A @ 208V/1PH SERVICE

RESIDENTIAL UNIT TYPES A1, A1S
ELECTRICAL SERVICE LOAD SUMMARY

740	SQUARE FT. x 3 VA	=	2,220 VA		(GENERAL LIGHTING/RECEPTACLE LOAD)
1,500	VA x 2	=	3,000 VA		(SMALL APPLIANCE LOAD)
1,500	VA x 1	=	1,500 VA		(WASHING MACHNE)
5,000	VA x 1	=	5,000 VA		(ELECTRIC DRYER)
4,500	VA x 1	=	4,500 VA		(ELECTRIC WATER HEATER)
1,200	VA x 1	=	1,200 VA		(DISHWASHER)
800	VA x 1	=	800 VA		(DISPOSAL)
840	VA x 1	=	840 VA		(REFRIGERATOR)
1,200	VA x 1	=	1,200 VA		(MICROVAVE/HOOD)
8,000	VA x 1	=	8,000 VA		(ELECTRIC RANGE/OVEN)
	CONNECTED GENERAL LOAD	=	28,260 VA		
	CONNECT HEAT/AC LOAD	=	5,696 VA		(PER NEC 220.82)
	TOTAL CONNECTED LOAD	=	33,956 VA		
	TOTAL DEMAND LOAD	=	23,000 VA		(PER NEC 220.82)
	TOTAL DEMAND AMPS	=	110.58 AMPS		125A @ 208V/1PH SERVICE

RESIDENTIAL UNIT TYPE B1
ELECTRICAL SERVICE LOAD SUMMARY

1,320	SQUARE FT. x 3 VA	=	3,960 VA		(GENERAL LIGHTING/RECEPTACLE LOAD)
1,500	VA x 2	=	3,000 VA		(SMALL APPLIANCE LOAD)
1,500	VA x 1	=	1,500 VA		(WASHING MACHNE)
5,000	VA x 1	=	5,000 VA		(ELECTRIC DRYER)
4,500	VA x 1	=	4,500 VA		(ELECTRIC WATER HEATER)
1,200	VA x 1	=	1,200 VA		(DISHWASHER)
800	VA x 1	=	800 VA		(DISPOSAL)
840	VA x 1	=	840 VA		(REFRIGERATOR)
1,200	VA x 1	=	1,200 VA		(MICROVAVE/HOOD)
8,000	VA x 1	=	8,000 VA		(ELECTRIC RANGE/OVEN)
	CONNECTED GENERAL LOAD	=	30,000 VA		
	CONNECT HEAT/AC LOAD	=	5,864 VA		(PER NEC 220.82)
	TOTAL CONNECTED LOAD	=	35,864 VA		
	TOTAL DEMAND LOAD	=	23,864 VA		(PER NEC 220.82)
	TOTAL DEMAND AMPS	=	114.73 AMPS		125A @ 208V/1PH SERVICE

RESIDENTIAL UNIT TYPES B2, B2S
ELECTRICAL SERVICE LOAD SUMMARY

1,110	SQUARE FT. x 3 VA	=	3,330 VA		(GENERAL LIGHTING/RECEPTACLE LOAD)
1,500	VA x 2	=	3,000 VA		(SMALL APPLIANCE LOAD)
1,500	VA x 1	=	1,500 VA		(WASHING MACHNE)
5,000	VA x 1	=	5,000 VA		(ELECTRIC DRYER)
4,500	VA x 1	=	4,500 VA		(ELECTRIC WATER HEATER)
1,200	VA x 1	=	1,200 VA		(DISHWASHER)
800	VA x 1	=	800 VA		(DISPOSAL)
840	VA x 1	=	840 VA		(REFRIGERATOR)
1,200	VA x 1	=	1,200 VA		(MICROVAVE/HOOD)
8,000	VA x 1	=	8,000 VA		(ELECTRIC RANGE/OVEN)
	CONNECTED GENERAL LOAD	=	29,370 VA		
	CONNECT HEAT/AC LOAD	=	5,696 VA		(PER NEC 220.82)
	TOTAL CONNECTED LOAD	=	35,066 VA		
	TOTAL DEMAND LOAD	=	23,444 VA		(PER NEC 220.82)
	TOTAL DEMAND AMPS	=	112.71 AMPS		125A @ 208V/1PH SERVICE

RESIDENTIAL UNIT TYPE C1
ELECTRICAL SERVICE LOAD SUMMARY

1,330	SQUARE FT. x 3 VA	=	3,990 VA		(GENERAL LIGHTING/RECEPTACLE LOAD)
1,500	VA x 2	=	3,000 VA		(SMALL APPLIANCE LOAD)
1,500	VA x 1	=	1,500 VA		(WASHING MACHNE)
5,000	VA x 1	=	5,000 VA		(ELECTRIC DRYER)
4,500	VA x 1	=	4,500 VA		(ELECTRIC WATER HEATER)
1,200	VA x 1	=	1,200 VA		(DISHWASHER)
800	VA x 1	=	800 VA		(DISPOSAL)
840	VA x 1	=	840 VA		(REFRIGERATOR)
1,200	VA x 1	=	1,200 VA		(MICROVAVE/HOOD)
8,000	VA x 1	=	8,000 VA		(ELECTRIC RANGE/OVEN)
	CONNECTED GENERAL LOAD	=	30,030 VA		
	CONNECT HEAT/AC LOAD	=	5,864 VA		(PER NEC 220.82)
	TOTAL CONNECTED LOAD	=	35,894 VA		
	TOTAL DEMAND LOAD	=	23,876 VA		(PER NEC 220.82)
	TOTAL DEMAND AMPS	=	114.79 AMPS		125A @ 208V/1PH SERVICE

RESIDENTIAL BUILDING TYPE I
LOAD SUMMARY - METER CENTER #1A

Unit Type A1	33,956	VA x 10	=	339,560 VA	
Unit Type B1	35,864	VA x 8	=	286,912 VA	
Unit Type C1	35,894	VA x 4	=	143,576 VA	
	TOTAL CONNECTED UNIT LOAD		=	770,048 VA	
	TOTAL UNIT DEMAND LOAD		=	277,217 VA	(PER NEC 220.84)
	TOTAL HOUSE PANEL LOAD		=	0 VA	
	TOTAL DEMAND AMPS		=	770.05 AMPS	1000A @ 208V/3PH, 4W SERVICE

RESIDENTIAL BUILDING TYPE I
LOAD SUMMARY - METER CENTER #1B

Unit Type S1	33,596	VA x 3	=	100,788 VA	
Unit Type A1	33,956	VA x 10	=	339,560 VA	
Unit Type B1	35,864	VA x 8	=	286,912 VA	
Unit Type C1	35,894	VA x 4	=	143,576 VA	
	TOTAL CONNECTED UNIT LOAD		=	870,836 VA	
	TOTAL UNIT DEMAND LOAD		=	304,793 VA	(PER NEC 220.84)
	TOTAL HOUSE PANEL LOAD		=	58,220 VA	
	TOTAL DEMAND AMPS		=	1,008.37 AMPS	1200A @ 208V/3PH, 4W SERVICE

RESIDENTIAL BUILDING TYPE II
LOAD SUMMARY - METER CENTER #2A

Unit Type A1	33,956	VA x 7	=	237,692 VA	
Unit Type B1	35,864	VA x 8	=	286,912 VA	
Unit Type B2	35,066	VA x 7	=	245,462 VA	
	TOTAL CONNECTED UNIT LOAD		=	770,066 VA	
	TOTAL UNIT DEMAND LOAD		=	277,224 VA	(PER NEC 220.84)
	TOTAL HOUSE PANEL LOAD		=	0 VA	
	TOTAL DEMAND AMPS		=	770.07 AMPS	1000A @ 208V/3PH, 4W SERVICE

RESIDENTIAL BUILDING TYPE II
LOAD SUMMARY - METER CENTER #2B

Unit Type A1	33,956	VA x 10	=	339,560 VA	
Unit Type B1	35,864	VA x 8	=	286,912 VA	
Unit Type C1	35,894	VA x 4	=	143,576 VA	
	TOTAL CONNECTED UNIT LOAD		=	770,048 VA	
	TOTAL UNIT DEMAND LOAD		=	277,217 VA	(PER NEC 220.84)
	TOTAL HOUSE PANEL LOAD		=	60,640 VA	
	TOTAL DEMAND AMPS		=	938.49 AMPS	1200A @ 208V/3PH, 4W SERVICE

LAKE COUNTY BUILDING SERVICES
Any errors or omissions in these plans shall be made to conform with the applicable code requirements per Florida Building Code, in accordance with Section 107. Plans were reviewed for code compliance and shall be kept on job site.

RECEIVED FEB 14 2019

PERMIT REVIEW STAMP

ISSUE HISTORY

No.	Date	Description
1	02/08/2019	ISSUE FOR PERMIT

REVISION HISTORY

No.	Date	Description

© 2019 These documents are the property of FUGLEBERG KOCH, P.L.C. (LB#6610) and are issued only for the specific project noted on these drawings. Any reproductions, revisions, or modifications of these documents without the expressed written consent of Fugleberg Koch, P.L.C. is prohibited by law.

FUGLEBERG KOCH
2555 Temple Trail, Winter Park, FL 32789 (407) 629-0595
www.fuglebergkoch.com BR569

CONSULTANT
Joseph, Lawrence & Co
Consulting Engineers
1180 HARWOOD AVE. SUITE 3000
ALTAMONTE SPRINGS, FLORIDA 32714
TEL: 321.972.4466
WWW.JLCENG.COM
CA NO. 28730

JLC 17.0127.00



Blake Lawrence Suddeth
P.E. #: 69060

SUMMER BAY APTS. II
LAKE COUNTY, FL

Drawn:	MJR/KCM
Checked:	BLS/AJB
Approval:	BLS/AJB
Date:	02/08/2019
Project #:	5389

SCHEDULES - ELECTRICAL

E6.01

TYPICAL UNIT PANEL 'S1'

LOCATION: 'S1' UNIT TYPES	VOLTAGE: 120/208V 1ø 3W	MIN. AIC RATING: 22K AIC
TYPE: SQUARE 'D' – TYPE QO	MAINS: 110A ☒ MLO ☐ MCB	MOUNTING: FLUSH
FED FROM: METER CENTER	LUGS: ☐ SUB–FEED ☐ FEED–THRU	ENCLOSURE: NEMA 1

NOTES:
PROVIDE TYPED WRITTEN DIRECTORY
PROVIDE GROUND & NEUTRAL BUS
PROVIDE 'NM' WHERE ALLOWED BY AHJ

CKT	CIRCUIT DESCRIPTION	NOTES	BRANCH CIRCUIT ø	NEUT	GND	COND	BKR	LOAD KVA	PHASE ø	LOAD KVA	BKR	BRANCH CIRCUIT ø	NEUT	GND	COND	NOTES	CIRCUIT DESCRIPTION	CKT
1	KITCHEN RECEPTACLES	1	12	12	12	NM	20/1	1.50	A	1.96	30/2	10	–	10	NM		AHU–1	2
3	KITCHEN RECEPTACLES	1	12	12	12	NM	20/1	1.50	B	1.96	–	10	–	–	–		–	4
5	BATHROOM LIGHTS/RECEPTACLES		12	12	12	NM	20/1	1.50	A	0.68	15/2	12	–	12	1/2"		CU–1	6
7	REFRIG	1	14	14	14	NM	15/1	0.84	B	0.68	–	12	–	–	–		–	8
9	GARBAGE DISPOSAL	1	14	14	14	NM	15/1	0.60	A	4.00	50/2	6	–	10	NM		RANGE	10
11	DISHWASHER	3	14	14	14	NM	15/1	1.20	B	4.00	–	6	–	–	–		–	12
13	RANGE HOOD	1	14	14	14	NM	15/1	1.20	A	2.25	30/2	10	–	10	NM	2	EWH–1	14
15	BEDROOM LIGHTS/RECEPTACLES	1	14	14	14	NM	15/1	1.20	B	2.25	–	10	–	–	–		–	16
17	LIVING LIGHTS/RECEPTACLES	1	14	14	14	NM	15/1	1.20	A	2.50	30/2	10	–	10	NM		DRYER	18
19	KITCHEN LIGHTS/CORRIDOR RECEPTS.	1	14	14	14	NM	15/1	1.20	B	2.50	–	10	–	–	–		–	20
21	SPACE ONLY		–	–	–	–	–	–	A	1.50	20/1	12	12	12	NM	3	WASHER	22
23	SPACE ONLY		–	–	–	–	–	–	B	0.18	15/1	14	14	14	NM	1	NTC CABINET	24

EQUIPMENT SERVED	CONN. LOAD	L.F.	D.F.	DEMAND LOAD	
NOTES: 1) PROVIDE ARC–FAULT CIRCUIT BREAKER PER NEC 210.12 2) PROVIDE "LOCK OUT" STYLE BREAKER HANDLE PER NEC 422.31 3) PROVIDE COMBINATION ARC–FAULT CIRCUIT AND GFCI BREAKER PER NEC 210.12 AND 210.8					TOTAL DEMAND AMPS: 109.88 AMPS PER UNIT SERVICE CALCULATION

TYPICAL UNIT PANEL 'A1'

LOCATION: 'A1S', 'A1' UNIT TYPES	VOLTAGE: 120/208V 1ø 3W	MIN. AIC RATING: 22K AIC
TYPE: SQUARE 'D' – TYPE QO	MAINS: 125A ☒ MLO ☐ MCB	MOUNTING: FLUSH
FED FROM: METER CENTER	LUGS: ☐ SUB–FEED ☐ FEED–THRU	ENCLOSURE: NEMA 1

NOTES:
PROVIDE TYPED WRITTEN DIRECTORY
PROVIDE GROUND & NEUTRAL BUS
PROVIDE 'NM' WHERE ALLOWED BY AHJ

CKT	CIRCUIT DESCRIPTION	NOTES	BRANCH CIRCUIT ø	NEUT	GND	COND	BKR	LOAD KVA	PHASE ø	LOAD KVA	BKR	BRANCH CIRCUIT ø	NEUT	GND	COND	NOTES	CIRCUIT DESCRIPTION	CKT
1	KITCHEN RECEPTACLES	1	12	12	12	NM	20/1	1.50	A	1.96	30/2	10	–	10	NM		AHU–1	2
3	KITCHEN RECEPTACLES	1	12	12	12	NM	20/1	1.50	B	1.96	–	10	–	–	–		–	4
5	BATHROOM LIGHTS/RECEPTACLES		12	12	12	NM	20/1	1.50	A	0.68	15/2	12	–	12	1/2"		CU–1	6
7	REFRIG	1	14	14	14	NM	15/1	0.84	B	0.68	–	12	–	–	–		–	8
9	GARBAGE DISPOSAL	1	14	14	14	NM	15/1	0.60	A	4.00	50/2	6	–	10	NM		RANGE	10
11	DISHWASHER	3	14	14	14	NM	15/1	1.20	B	4.00	–	6	–	–	–		–	12
13	RANGE HOOD	1	14	14	14	NM	15/1	1.20	A	2.25	30/2	10	–	10	NM	2	EWH–1	14
15	BEDROOM LIGHTS/RECEPTACLES	1	14	14	14	NM	15/1	1.20	B	2.25	–	10	–	–	–		–	16
17	LIVING LIGHTS/RECEPTACLES	1	14	14	14	NM	15/1	1.20	A	2.50	30/2	10	–	10	NM		DRYER	18
19	KITCHEN LIGHTS/CORRIDOR RECEPTS.	1	14	14	14	NM	15/1	1.20	B	2.50	–	10	–	–	–		–	20
21	SPACE ONLY		–	–	–	–	–	–	A	1.50	20/1	12	12	12	NM	3	WASHER	22
23	SPACE ONLY		–	–	–	–	–	–	B		15/1	14	14	14	NM	1	NTC CABINET	24

EQUIPMENT SERVED	CONN. LOAD	L.F.	D.F.	DEMAND LOAD	
NOTES: 1) PROVIDE ARC–FAULT CIRCUIT BREAKER PER NEC 210.12 2) PROVIDE "LOCK OUT" STYLE BREAKER HANDLE PER NEC 422.31 3) PROVIDE COMBINATION ARC–FAULT CIRCUIT AND GFCI BREAKER PER NEC 210.12 AND 210.8					TOTAL DEMAND AMPS: 110.58 AMPS PER UNIT SERVICE CALCULATION

TYPICAL UNIT PANEL 'B1'

LOCATION: 'B1' UNIT TYPES	VOLTAGE: 120/208V 1ø 3W	MIN. AIC RATING: 22K AIC
TYPE: SQUARE 'D' – TYPE QO	MAINS: 125A ☒ MLO ☐ MCB	MOUNTING: FLUSH
FED FROM: METER CENTER	LUGS: ☐ SUB–FEED ☐ FEED–THRU	ENCLOSURE: NEMA 1

NOTES:
PROVIDE TYPED WRITTEN DIRECTORY
PROVIDE GROUND & NEUTRAL BUS
PROVIDE 'NM' WHERE ALLOWED BY AHJ

CKT	CIRCUIT DESCRIPTION	NOTES	BRANCH CIRCUIT ø	NEUT	GND	COND	BKR	LOAD KVA	PHASE ø	LOAD KVA	BKR	BRANCH CIRCUIT ø	NEUT	GND	COND	NOTES	CIRCUIT DESCRIPTION	CKT
1	KITCHEN RECEPTACLES	1	12	12	12	NM	20/1	1.50	A	1.96	30/2	10	–	10	NM		AHU–3	2
3	KITCHEN RECEPTACLES	1	12	12	12	NM	20/1	1.50	B	1.96	–	10	–	–	–		–	4
5	BATHROOM LIGHTS/RECEPTACLES		12	12	12	NM	20/1	1.50	A	1.18	20/2	10	–	10	3/4"		CU–3	6
7	REFRIG	1	14	14	14	NM	15/1	0.84	B	1.18	–	10	–	–	–		–	8
9	GARBAGE DISPOSAL	1	14	14	14	NM	15/1	0.60	A	4.00	50/2	6	–	10	NM		RANGE	10
11	DISHWASHER	3	14	14	14	NM	15/1	1.20	B	4.00	–	6	–	–	–		–	12
13	RANGE HOOD	1	14	14	14	NM	15/1	1.20	A	2.25	30/2	10	–	10	NM	2	EWH–1	14
15	BEDROOM LIGHTS/RECEPTACLES	1	14	14	14	NM	15/1	1.20	B	2.25	–	10	–	–	–		–	16
17	LIVING LIGHTS/RECEPTACLES	1	14	14	14	NM	15/1	1.20	A	2.50	30/2	10	–	10	NM		DRYER	18
19	KITCHEN LIGHTS/CORRIDOR RECEPTS.	1	14	14	14	NM	15/1	1.20	B	2.50	–	10	–	–	–		–	20
21	BATHROOM LIGHTS/RECEPTACLES		12	12	12	NM	20/1	1.50	A	1.50	20/1	12	12	12	NM	3	WASHER	22
23	BEDROOM LIGHTS/RECEPTACLES	1	14	14	14	NM	15/1	1.20	B		15/1	14	14	14	NM	1	NTC CABINET	24

EQUIPMENT SERVED	CONN. LOAD	L.F.	D.F.	DEMAND LOAD	
NOTES: 1) PROVIDE ARC–FAULT CIRCUIT BREAKER PER NEC 210.12 2) PROVIDE "LOCK OUT" STYLE BREAKER HANDLE PER NEC 422.31 3) PROVIDE COMBINATION ARC–FAULT CIRCUIT AND GFCI BREAKER PER NEC 210.12 AND 210.8					TOTAL DEMAND AMPS: 114.73 AMPS PER UNIT SERVICE CALCULATION

TYPICAL UNIT PANEL 'B2'

LOCATION: 'B2', 'B2S' UNIT TYPES	VOLTAGE: 120/208V 1ø 3W	MIN. AIC RATING: 22K AIC
TYPE: SQUARE 'D' – TYPE QO	MAINS: 125A ☒ MLO ☐ MCB	MOUNTING: FLUSH
FED FROM: METER CENTER	LUGS: ☐ SUB–FEED ☐ FEED–THRU	ENCLOSURE: NEMA 1

NOTES:
PROVIDE TYPED WRITTEN DIRECTORY
PROVIDE GROUND & NEUTRAL BUS
PROVIDE 'NM' WHERE ALLOWED BY AHJ

CKT	CIRCUIT DESCRIPTION	NOTES	BRANCH CIRCUIT ø	NEUT	GND	COND	BKR	LOAD KVA	PHASE ø	LOAD KVA	BKR	BRANCH CIRCUIT ø	NEUT	GND	COND	NOTES	CIRCUIT DESCRIPTION	CKT
1	KITCHEN RECEPTACLES	1	12	12	12	NM	20/1	1.50	A	1.96	30/2	10	–	10	NM		AHU–2	2
3	KITCHEN RECEPTACLES	1	12	12	12	NM	20/1	1.50	B	1.96	–	10	–	–	–		–	4
5	BATHROOM LIGHTS/RECEPTACLES		12	12	12	NM	20/1	1.50	A	0.86	15/2	10	–	10	3/4"		CU–2	6
7	REFRIG	1	14	14	14	NM	15/1	0.84	B	0.86	–	10	–	–	–		–	8
9	GARBAGE DISPOSAL	1	14	14	14	NM	15/1	0.60	A	4.00	50/2	6	–	10	NM		RANGE	10
11	DISHWASHER	3	14	14	14	NM	15/1	1.20	B	4.00	–	6	–	–	–		–	12
13	RANGE HOOD	1	14	14	14	NM	15/1	1.20	A	2.25	30/2	10	–	10	NM	2	EWH–1	14
15	BEDROOM LIGHTS/RECEPTACLES	1	14	14	14	NM	15/1	1.20	B	2.25	–	10	–	–	–		–	16
17	LIVING LIGHTS/RECEPTACLES	1	14	14	14	NM	15/1	1.20	A	2.50	30/2	10	–	10	NM		DRYER	18
19	KITCHEN LIGHTS/CORRIDOR RECEPTS.	1	14	14	14	NM	15/1	1.20	B	2.50	–	10	–	–	–		–	20
21	BATHROOM LIGHTS/RECEPTACLES		12	12	12	NM	20/1	1.50	A	1.50	20/1	12	12	12	NM	3	WASHER	22
23	BEDROOM LIGHTS/RECEPTACLES	1	14	14	14	NM	15/1	1.20	B		15/1	14	14	14	NM	1	NTC CABINET	24

EQUIPMENT SERVED	CONN. LOAD	L.F.	D.F.	DEMAND LOAD	
NOTES: 1) PROVIDE ARC–FAULT CIRCUIT BREAKER PER NEC 210.12 2) PROVIDE "LOCK OUT" STYLE BREAKER HANDLE PER NEC 422.31 3) PROVIDE COMBINATION ARC–FAULT CIRCUIT AND GFCI BREAKER PER NEC 210.12 AND 210.8					TOTAL DEMAND AMPS: 112.71 AMPS PER UNIT SERVICE CALCULATION

LIGHTING FIXTURE SCHEDULE - TYPICAL UNITS

MARK	DESCRIPTION	MANUFACTURER	MODEL	VOLTS	LAMP QTY	LAMP WATTS	LAMP MODEL	FIXTURE WATTS
A	DECORATIVE LED CEILING MOUNT FIXTURE LOCATED IN KITCHEN	TBD	TBD	120	1	17	LED	17
B	2' LED STRIP LIGHT LOCATED ABOVE KITCHEN SINK	TBD	TBD	120	1	17	LED	17
C	DECORATIVE LED CEILING MOUNT FIXTURE LOCATED AT CLOSETS	TBD	TBD	120	1	17	LED	17
D	LED WALL MOUNTED VANITY LIGHT FIXTURE LOCATED ABOVE BATHROOM SINK	TBD	TBD	120	1	17	LED	17
F	52" CEILING FAN WITH LIGHT KIT LOCATED AT BEDROOMS AND LIVING ROOM	TBD	TBD	120	1	30	LED	30
G	LED SURFACE MOUNTED CLOSE–TO–TUB FIXTURE. UL DAMP LABEL RATED	TBD	TBD	120	1	17	LED	167
H	EXTERIOR STAINLESS STEEL BRACKET LED LIGHT WITH CLEAR GLASS LENS. UL WET LABEL RATED	TBD	TBD	120	1	17	LED	17
J	DECORATIVE LED CEILING MOUNT FIXTURE LOCATED AT HALLWAYS, CORRIDORS, AND ENTRY WAY	TBD	TBD	120	1	17	LED	17
K	DECORATIVE LED MINI–PENDANT FIXTURE LOCATED IN LAUNDRY ROOM	TBD	TBD	120	1	17	LED	17

NOTES:
1) DIVISION 16 CONTRACTOR SHALL VERIFY ALL FIXTURE TYPES AND FINISHES WITH OWNER PRIOR TO ORDERING.

TYPICAL UNIT PANEL C1

LOCATION: 'C1' UNIT TYPES	VOLTAGE: 120/208V 1ø 3W	MIN. AIC RATING: 22 KAIC
TYPE: SQUARE 'D' – TYPE QO	MAINS: 125A ☒ MLO ☐ MCB	MOUNTING: FLUSH
FED FROM: METER CENTER	LUGS: ☐ SUB–FEED ☐ FEED–THRU	ENCLOSURE: NEMA 1

NOTES:
PROVIDE TYPED WRITTEN DIRECTORY
PROVIDE GROUND & NEUTRAL BUS
TYPE 'NM' CABLE WHERE APPROVED BY A.H.J.

CKT	CIRCUIT DESCRIPTION	NOTES	BRANCH CIRCUIT ø	NEUT	GND	COND	BKR	LOAD KVA	PHASE ø	LOAD KVA	BKR	BRANCH CIRCUIT ø	NEUT	GND	COND	NOTES	CIRCUIT DESCRIPTION	CKT
1	KITCHEN RECEPTACLES	1	12	12	12	NM	20/1	1.50	A	1.96	30/2	10	–	10	NM		AHU–3	2
3	KITCHEN RECEPTACLES	1	12	12	12	NM	20/1	1.50	B	1.96	–	10	–	–	–		–	4
5	BATHROOM LIGHTS/RECEPTACLES		12	12	12	NM	20/1	1.50	A	1.18	20/2	10	–	10	3/4"		CU–3	6
7	REFRIGERATOR	1	14	14	14	NM	15/1	0.84	B	1.18	–	10	–	–	–		–	8
9	GARBAGE DISPOSAL	1	14	14	14	NM	15/1	0.60	A	4.10	50/2	6	–	10	NM		RANGE	10
11	DISHWASHER	3	14	14	14	NM	15/1	1.20	B	4.10	50/2	6	–	–	–		–	12
13	RANGE HOOD	1	14	14	14	NM	15/1	0.60	A	2.25	30/2	10	–	10	NM	2	EWH–1	14
15	BEDROOM LIGHTS/RECEPTACLES	1	14	14	14	NM	15/1	0.50	B	2.25	–	10	–	–	–		–	16
17	LIVING ROOM LIGHTS/RECEPTACLES	1	14	14	14	NM	15/1	1.20	A	2.50	30/2	10	–	10	NM		DRYER	18
19	KITCHEN LIGHTS/CORRIDOR RECEPTS.	1	14	14	14	NM	15/1	1.20	B	2.50	–	10	–	–	–		–	20
21	BATHROOM LIGHTS/RECEPTACLES		12	12	12	NM	20/1	1.20	A	1.50	20/1	12	12	12	NM	3	WASHER	22
23	BEDROOM LIGHTS/RECEPTACLES	1	14	14	14	NM	15/1	1.20	B		15/1	14	14	14	NM	1	NTC CABINET	24
25	BATHROOM LIGHTS/RECEPTACLES		12	12	12	NM	20/1	1.20	A	–	–	–	–	–	–		SPACE ONLY	26
27	BEDROOM LIGHTS/RECEPTACLES	1	14	14	14	NM	15/1	1.20	B	–	–	–	–	–	–		SPACE ONLY	28

EQUIPMENT SERVED	CONN. LOAD	L.F.	D.F.	DEMAND LOAD	
NOTES: 1) PROVIDE ARC–FAULT CIRCUIT BREAKER PER NEC 210.12 2) PROVIDE "LOCK OUT" STYLE BREAKER HANDLE PER NEC 422.31 3) PROVIDE COMBINATION ARC–FAULT CIRCUIT AND GFCI BREAKER PER NEC 210.12 AND 210.8					TOTAL DEMAND AMPS: 114.79 AMPS PER UNIT SERVICE CALCULATION

LAKE COUNTY BUILDING SERVICES
Any errors or omissions in these plans shall be made to conform with the applicable code requirements per Florida Building Code, in accordance with Section 107. Plans were reviewed for code compliance and shall be kept on job site.

RECEIVED FEB 14 2019

PERMIT REVIEW STAMP

ISSUE HISTORY

No.	Date	Description
1	02/08/2019	ISSUE FOR PERMIT

REVISION HISTORY

No.	Date	Description

FUGLEBERG KOCH
2555 Temple Trail, Winter Park, FL 32789 (407) 629-0595
www.fuglebergkoch.com BR569

CONSULTANT
Joseph, Lawrence & Co
Consulting Engineers
1180 HARWOOD AVE. SUITE 3000
ALTAMONTE SPRINGS, FLORIDA 32714
TEL: 321.972.4466
WWW.JLCENG.COM
CA NO. 28730

JLC 17.0137.00
Blake Lawrence Suddeth
P.E. #: 69060

SUMMER BAY APTS. II
LAKE COUNTY, FL

Drawn:	MJR/KCM
Checked:	BLS/AJB
Approval:	BLS/AJB
Date:	02/08/2019
Project #:	5389

SCHEDULES - ELECTRICAL

E6.02

© 2015 These documents and their contents are the property of FUGLEBERG KOCH, PLLC - AA26002103, and are issued only for the specific project noted on these drawings. Any reproductions, revisions, or modifications of these documents without the expressed written consent of Fugleberg Koch, PLLC is prohibited by law.

PANEL H1 (SECTION 1)

LOCATION: BUILDING TYPE I	VOLTAGE: 208Y/120V 3ø 4W	MIN. AIC RATING: 22K AIC	NOTES: PROVIDE TYPED WRITTEN DIRECTORY PROVIDE GROUND & NEUTRAL BUS
TYPE: SQUARE–D	MAINS: 300A ☒ MLO ☐ MCB	MOUNTING: SURFACE	
FED FROM: METER CENTER #1B	LUGS: ☐ SUB–FEED ☒ FEED–THRU	ENCLOSURE: NEMA 1	

CKT	CIRCUIT DESCRIPTION	NOTES	BRANCH CIRCUIT ø	NEUT	GND	COND	BKR	LOAD KVA	PHASE ø	LOAD KVA	BKR	BRANCH CIRCUIT ø	NEUT	GND	COND	NOTES	CIRCUIT DESCRIPTION	CKT
1	RECEPS – CORRIDOR		10	10	10	1/2"	20/1	0.72	A	1.00	20/1	12	12	12	1/2"		GARAGE RECEPTACLES	2
3	RECEPS – CORRIDOR		10	10	10	1/2"	20/1	0.72	B	1.00	20/1	12	12	12	1/2"		GARAGE RECEPTACLES	4
5	RECEPS – CORRIDOR		10	10	10	1/2"	20/1	0.72	C	1.00	20/1	12	12	12	1/2"		GARAGE RECEPTACLES	6
7	RECEPS – CORRIDOR		10	10	10	1/2"	20/1	0.72	A	1.00	20/1	12	12	12	1/2"		GARAGE RECEPTACLES	8
9	RECEPS – CORRIDOR		10	10	10	1/2"	20/1	0.72	B	1.00	20/1	12	12	12	1/2"		GARAGE RECEPTACLES	10
11	RECEPS – CORRIDOR		10	10	10	1/2"	20/1	0.18	C	1.00	20/1	12	12	12	1/2"		GARAGE RECEPTACLES	12
13	RECEPS – TTB		12	12	12	1/2"	20/1	0.36	A	1.00	20/1	12	12	12	1/2"		GARAGE RECEPTACLES	14
15	RECEPS – TTB		12	12	12	1/2"	20/1	0.36	B	1.00	20/1	12	12	12	1/2"		GARAGE RECEPTACLES	16
17	FACP		12	12	12	1/2"	20/1	0.50	C	1.00	20/1	12	12	12	1/2"		ELEVATOR PIT LIGHTS/RECEPTACLES	18
19	LIGHTING – EXTERIOR		10	10	10	1/2"	20/1	0.16	A	1.00	20/1	12	12	12	1/2"		SUMP PUMP	20
21	LIGHTING – GARAGES		10	10	10	1/2"	20/1	0.20	B	4.80	60/3	4	4	10	1.25"		ELEVATOR CONTROLLER	22
23	LIGHTING – STAIRS		10	10	10	1/2"	20/1	0.42	C	4.80	–	4	–	–	–		–	24
25	LIGHTING – STAIRS		10	10	10	1/2"	20/1	0.42	A	4.80	–	4	–	–	–		–	26
27	LIGHTING – FIRST FLOOR CORRIDOR		10	10	10	1/2"	20/1	0.80	B	////	////	–	–	–	–		ELEVATOR CONTROLLER SHUNT TRIP	28
29	LIGHTING – SECOND FLOOR CORRIDOR		10	10	10	1/2"	20/1	0.39	C	1.00	20/1	12	12	12	1/2"		ELEVATOR CAB LIGHTS	30
31	LIGHTING – THIRD FLOOR CORRIDOR		10	10	10	1/2"	20/1	0.39	A	0.18	20/1	12	12	12	1/2"		ELEVATOR SERVICE RECEPTACLE	32
33	LIGHTING – FOURTH FLOOR CORRIDOR		10	10	10	1/2"	20/1	0.39	B	1.00	20/2	10	10	10	3/4"		SITE LIGHTING POLES	34
35	RECEPS – ROOF TOP		10	10	10	1/2"	20/1	0.72	C	1.00	–	10	–	–	–		–	36
37	SPARE		–	–	–	–	20/1	–	A	0.50	20/1	12	12	12	1/2"		EXTERIOR BLDG LIGHTING	38
39	SPARE		–	–	–	–	20/1	–	B	–	20/1	–	–	–	–		SPARE	40
41	SPARE		–	–	–	–	20/1	–	C	–	20/1	–	–	–	–		SPARE	42

EQUIPMENT SERVED	CONN. LOAD	L.F.	D.F.	DEMAND LOAD	
LIGHTING	3.17 KVA		125%	3.96 KVA	
RECEPTACLES – GENERAL	5.22 KVA		100%	5.22 KVA	
EQUIPMENT	25.90 KVA		100%	25.90 KVA	
SECOND SECTION	23.14 KVA		100%	23.14 KVA	
NOTES:					TOTAL DEMAND LOAD: 58.22 KVA
					TOTAL DEMAND AMPS: 161.72 AMPS

PANEL H1 (SECTION 2)

LOCATION: BUILDING TYPE I	VOLTAGE: 208Y/120V 3ø 4W	MIN. AIC RATING: 22K AIC	NOTES: PROVIDE TYPED WRITTEN DIRECTORY PROVIDE GROUND & NEUTRAL BUS
TYPE: SQUARE–D	MAINS: 300A ☒ MLO ☐ MCB	MOUNTING: SURFACE	
FED FROM: METER CENTER #1B	LUGS: ☐ SUB–FEED ☒ FEED–THRU	ENCLOSURE: NEMA 1	

CKT	CIRCUIT DESCRIPTION	NOTES	BRANCH CIRCUIT ø	NEUT	GND	COND	BKR	LOAD KVA	PHASE ø	LOAD KVA	BKR	BRANCH CIRCUIT ø	NEUT	GND	COND	NOTES	CIRCUIT DESCRIPTION	CKT
43	AHU 1.1		10	10	10	1/2"	30/2	2.25	A	1.16	20/2	10	10	10	1/2"		MCU–1	44
45	–		10	–	–	–	–	2.25	B	1.16	–	10	–	–	–		–	46
47	AHU 1.2		10	10	10	1/2"	30/2	2.25	C	1.16	20/2	10	10	10	1/2"		MCU–1	48
49	–		10	–	–	–	–	2.25	A	1.16	–	10	–	–	–		–	50
51	AHU 1.3		10	10	10	1/2"	30/2	2.25	B	1.42	25/2	10	10	10	1/2"		CU–1.1	52
53	–		10	–	–	–	–	2.25	C	1.42	–	10	–	–	–		–	54
55	AHU 1.4		10	10	10	1/2"	30/2	2.25	A	1.18	25/2	10	10	10	1/2"		CU 1.2	56
57	–		10	–	–	–	–	2.25	B	1.18	–	10	–	–	–		–	58
59	FIRE SMOKE DAMPERS		10	10	10	1/2"	20/1	0.50	C	1.18	25/2	10	10	10	1/2"		CU 1.3	60
61	SPARE		–	–	–	–	20/1	–	A	1.18	–	10	–	–	–		–	62
63	SPARE		–	–	–	–	20/1	–	B	1.18	25/2	10	10	10	1/2"		CU 1.4	64
65	SPARE		–	–	–	–	20/1	–	C	1.18	–	10	–	–	–		–	66
67	SPARE		–	–	–	–	20/1	–	A	–	–	–	–	–	–		SPACE ONLY	68
69	SPARE		–	–	–	–	20/1	–	B	–	–	–	–	–	–		SPACE ONLY	70
71	SPARE		–	–	–	–	20/1	–	C	–	–	–	–	–	–		SPACE ONLY	72
73	SPARE		–	–	–	–	20/1	–	A	–	–	–	–	–	–		SPACE ONLY	74
75	SPARE		–	–	–	–	20/1	–	B	–	–	–	–	–	–		SPACE ONLY	76
77	SPACE ONLY		–	–	–	–	–	–	C	–	–	–	–	–	–		SPACE ONLY	78
79	SPACE ONLY		–	–	–	–	–	–	A	–	–	–	–	–	–		SPACE ONLY	80
81	SPACE ONLY		–	–	–	–	–	–	B	–	–	–	–	–	–		SPACE ONLY	82
83	SPACE ONLY		–	–	–	–	–	–	C	–	–	–	–	–	–		SPACE ONLY	84

EQUIPMENT SERVED	CONN. LOAD	L.F.	D.F.	DEMAND LOAD	
EQUIPMENT	23.14 KVA		100%	23.14 KVA	
NOTES:					TOTAL DEMAND LOAD: 23.14 KVA
					LOAD CARRIED OVER TO FIRST SECTION

PANEL H2 (SECTION 1)

LOCATION: BUILDING TYPE II	VOLTAGE: 208Y/120V 3ø 4W	MIN. AIC RATING: 22K AIC	NOTES: PROVIDE TYPED WRITTEN DIRECTORY PROVIDE GROUND & NEUTRAL BUS
TYPE: SQUARE–D	MAINS: 300A ☒ MLO ☐ MCB	MOUNTING: SURFACE	
FED FROM: METER CENTER #2B	LUGS: ☐ SUB–FEED ☐ FEED–THRU	ENCLOSURE: NEMA 1	

CKT	CIRCUIT DESCRIPTION	NOTES	BRANCH CIRCUIT ø	NEUT	GND	COND	BKR	LOAD KVA	PHASE ø	LOAD KVA	BKR	BRANCH CIRCUIT ø	NEUT	GND	COND	NOTES	CIRCUIT DESCRIPTION	CKT
1	RECEPS – CORRIDOR		10	10	10	1/2"	20/1	0.72	A	1.00	20/1	12	12	12	1/2"		GARAGE RECEPTACLES	2
3	RECEPS – CORRIDOR		10	10	10	1/2"	20/1	0.72	B	1.00	20/1	12	12	12	1/2"		GARAGE RECEPTACLES	4
5	RECEPS – CORRIDOR		10	10	10	1/2"	20/1	0.72	C	1.00	20/1	12	12	12	1/2"		GARAGE RECEPTACLES	6
7	RECEPS – CORRIDOR		10	10	10	1/2"	20/1	0.72	A	1.00	20/1	12	12	12	1/2"		GARAGE RECEPTACLES	8
9	RECEPS – CORRIDOR		10	10	10	1/2"	20/1	0.72	B	1.00	20/1	12	12	12	1/2"		GARAGE RECEPTACLES	10
11	RECEPS – CORRIDOR		10	10	10	1/2"	20/1	0.18	C	1.00	20/1	12	12	12	1/2"		GARAGE RECEPTACLES	12
13	RECEPS – TTB		12	12	12	1/2"	20/1	0.36	A	1.00	20/1	12	12	12	1/2"		GARAGE RECEPTACLES	14
15	RECEPS – TTB		12	12	12	1/2"	20/1	0.36	B	1.00	20/1	12	12	12	1/2"		GARAGE RECEPTACLES	16
17	FACP		12	12	12	1/2"	20/1	0.50	C	1.00	20/1	12	12	12	1/2"		ELEVATOR PIT LIGHTS/RECEPTACLES	18
19	LIGHTING – EXTERIOR		10	10	10	1/2"	20/1	0.16	A	1.00	20/1	12	12	12	1/2"		SUMP PUMP	20
21	LIGHTING – GARAGES		10	10	10	1/2"	20/1	0.20	B	4.80	60/3	4	4	10	1.25"		ELEVATOR CONTROLLER	22
23	LIGHTING – STAIRS		10	10	10	1/2"	20/1	0.42	C	4.80	–	4	–	–	–		–	24
25	LIGHTING – STAIRS		10	10	10	1/2"	20/1	0.42	A	4.80	–	4	–	–	–		–	26
27	LIGHTING – FIRST FLOOR CORRIDOR		10	10	10	1/2"	20/1	0.68	B	////	////	–	–	–	–		ELEVATOR CONTROLLER SHUNT TRIP	28
29	LIGHTING – SECOND FLOOR CORRIDOR		10	10	10	1/2"	20/1	0.30	C	1.00	20/1	12	12	12	1/2"		ELEVATOR CAB LIGHTS	30
31	LIGHTING – THIRD FLOOR CORRIDOR		10	10	10	1/2"	20/1	0.30	A	0.18	20/1	12	12	12	1/2"		ELEVATOR SERVICE RECEPTACLE	32
33	LIGHTING – FOURTH FLOOR CORRIDOR		10	10	10	1/2"	20/1	0.30	B	1.00	20/2	10	10	10	3/4"		SITE LIGHTING POLES	34
35	RECEPS – ROOF TOP		10	10	10	1/2"	20/1	0.72	C	1.00	–	10	–	–	–		–	36
37	SPARE		–	–	–	–	20/1	–	A	0.50	20/1	12	12	12	1/2"		EXTERIOR BLDG LIGHTING	38
39	SPARE		–	–	–	–	20/1	–	B	–	20/1	–	–	–	–		SPARE	40
41	SPARE		–	–	–	–	20/1	–	C	–	20/1	–	–	–	–		SPARE	42

EQUIPMENT SERVED	CONN. LOAD	L.F.	D.F.	DEMAND LOAD	
LIGHTING	2.78 KVA		125%	3.48 KVA	
RECEPTACLES – GENERAL	5.22 KVA		100%	5.22 KVA	
EQUIPMENT	25.90 KVA		100%	25.90 KVA	
SECOND SECTION	26.04 KVA		100%	26.04 KVA	
NOTES:					TOTAL DEMAND LOAD: 60.64 KVA
					TOTAL DEMAND AMPS: 168.44 AMPS

PANEL H2 (SECTION 2)

LOCATION: BUILDING TYPE II	VOLTAGE: 208Y/120V 3ø 4W	MIN. AIC RATING: 22K AIC	NOTES: PROVIDE TYPED WRITTEN DIRECTORY PROVIDE GROUND & NEUTRAL BUS
TYPE: SQUARE–D	MAINS: 300A ☒ MLO ☐ MCB	MOUNTING: SURFACE	
FED FROM: METER CENTER #2B	LUGS: ☐ SUB–FEED ☐ FEED–THRU	ENCLOSURE: NEMA 1	

CKT	CIRCUIT DESCRIPTION	NOTES	BRANCH CIRCUIT ø	NEUT	GND	COND	BKR	LOAD KVA	PHASE ø	LOAD KVA	BKR	BRANCH CIRCUIT ø	NEUT	GND	COND	NOTES	CIRCUIT DESCRIPTION	CKT
43	AHU 2.1		10	10	10	1/2"	30/2	2.25	A	1.16	20/2	10	10	10	1/2"		MCU–1	44
45	–		10	–	–	–	–	2.25	B	1.16	–	10	–	–	–		–	46
47	AHU 2.2		10	10	10	1/2"	30/2	2.25	C	1.16	20/2	10	10	10	1/2"		MCU–1	48
49	–		10	–	–	–	–	2.25	A	1.16	–	10	–	–	–		–	50
51	AHU 2.3		10	10	10	1/2"	30/2	2.25	B	1.42	25/2	10	10	10	1/2"		CU–2.1	52
53	–		10	–	–	–	–	2.25	C	1.42	–	10	–	–	–		–	54
55	AHU 2.4		10	10	10	1/2"	30/2	2.25	A	1.18	25/2	10	10	10	1/2"		CU 2.2	56
57	–		10	–	–	–	–	2.25	B	1.18	–	10	–	–	–		–	58
59	FIRE SMOKE DAMPERS		10	10	10	1/2"	20/1	0.50	C	1.18	25/2	10	10	10	1/2"		CU 2.3	60
61	SITE GATE MOTOR	1	10	10	10	3/4"	20/1	1.20	A	1.18	–	10	–	–	–		–	62
63	SITE GATE MOTOR	1	10	10	10	3/4"	20/1	1.20	B	1.18	25/2	10	10	10	1/2"		CU 2.4	64
65	SITE GATE SENSOR	1	10	10	10	3/4"	20/1	0.50	C	1.18	–	10	–	–	–		–	66
67	SPARE		–	–	–	–	20/1	–	A	–	–	–	–	–	–		SPACE ONLY	68
69	SPARE		–	–	–	–	20/1	–	B	–	–	–	–	–	–		SPACE ONLY	70
71	SPARE		–	–	–	–	20/1	–	C	–	–	–	–	–	–		SPACE ONLY	72
73	SPARE		–	–	–	–	20/1	–	A	–	–	–	–	–	–		SPACE ONLY	74
75	SPARE		–	–	–	–	20/1	–	B	–	–	–	–	–	–		SPACE ONLY	76
77	SPARE		–	–	–	–	20/1	–	C	–	–	–	–	–	–		SPACE ONLY	78
79	SPARE		–	–	–	–	20/1	–	A	–	–	–	–	–	–		SPACE ONLY	80
81	SPARE		–	–	–	–	20/1	–	B	–	–	–	–	–	–		SPACE ONLY	82
83	SPACE ONLY		–	–	–	–	–	–	C	–	–	–	–	–	–		SPACE ONLY	84

EQUIPMENT SERVED	CONN. LOAD	L.F.	D.F.	DEMAND LOAD	
EQUIPMENT	26.04 KVA		100%	26.04 KVA	
NOTES: 1) CIRCUIT APPLIES TO BUILDING #1 ONLY					TOTAL DEMAND LOAD: 26.04 KVA
					LOAD CARRIED OVER TO FIRST SECTION

LIGHTING FIXTURE SCHEDULE

MARK	DESCRIPTION	MANUFACTURER	MODEL	VOLTS	LAMP QTY	LAMP WATTS	LAMP MODEL	FIXTURE WATTS
BA	SURFACE MOUNTED LED LOCATED AT MAIN CORRIDORS.	TBD	TBD	120	1	17	LED	17
BB	DECORATIVE EXTERIOR WALL SCONCE LOCATED AT BUILDING ENTRANCES. UL WET LABEL RATED.	TBD	TBD	120	1	15	LED	15
BC	SURFACE MOUNTED LED LOCATED AT STORAGE CLOSESTS.	TBD	TBD	120	1	17	LED	17
BD	WELL MOUNTED LED STAIRWELL WITH INTEGRATED MOTION SENSOR AND BI–LEVEL BALLAST	PHILIPS	SF–4–C–38A–40–U–DZT–US–EMLED	120	1	53	LED	53
BF	4' SURFACE MOUNTED HIGH OUTPUT LED WRAP WITH EMERGENCY BATTERY BACKUP.	PRUDENTIAL LIGHTING	S1–LED35–HO–4–WA–YGW–UNV–SUR–ND–EMH	120	1	44	LED	44
BG	4' LED WRAPAROUND FIXTURE LOCATED AT GARAGES, MECHANICAL ROOMS, AND ELECTRICAL ROOMS.	COLUMBIA	LAW–4–30–LW–E–U	120	1	25	LED	25
EM	WALL MOUNTED EMERGENCY LIGHT WITH THERMOPLASTIC HOUSING, TWIN HEADS AND BATTERY BACKUP	DUAL LITE	EV4–02L	120	2	2	LED	4
EM2	WALL MOUNTED EMERGENCY LIGHT WITH THERMOPLASTIC HOUSING, TWIN HEADS AND BATTERY BACKUP, WET LOCATION.	DUAL LITE	EV4–02L	120	2	2	LED	4
X1	SINGLE FACE EXIT SIGN WITH WHITE THERMOPLASTIC HOUSING, RED LETTERS AND BATTERY BACKUP	DUAL LITE	EVE–U–R–W–E	120	–	–	LED	–
X2	DOUBLE FACE EXIT SIGN WITH WHITE THERMOPLASTIC HOUSING, RED LETTERS AND BATTERY BACKUP	DUAL LITE	EVE–U–R–W–E	120	–	–	LED	–

LAKE COUNTY BUILDING SERVICES
Any errors or omissions in these plans shall be made to conform with the applicable code requirements per Florida Building Code, in accordance with Section 107. Plans were reviewed for code compliance and shall be kept on job site.

RECEIVED FEB 14 2019

PERMIT REVIEW STAMP

ISSUE HISTORY

No.	Date	Description
1	02/08/2019	ISSUE FOR PERMIT

REVISION HISTORY

No.	Date	Description

FUGLEBERG KOCH
2555 Temple Trail, Winter Park, FL 32789 (407) 629-0595
www. fuglebergkoch.com BR569

CONSULTANT
Joseph, Lawrence & Co Consulting Engineers
1180 HARWOOD AVE. SUITE 3000
ALTAMONTE SPRINGS, FLORIDA 32714
TEL: 321.972.4466
WWW.JLCENG.COM
CA NO. 28730

JLC 17.0137.00
Blake Lawrence Suddeth
P.E. #: 69060

SUMMER BAY APTS. II
LAKE COUNTY, FL

Drawn:	MJR/KCM
Checked:	BLS/AJB
Approval:	BLS/AJB
Date:	02/08/2019
Project #:	5389

SCHEDULES - ELECTRICAL

E6.03

© 2015 These documents and their contents are the property of FUGLEBERG KOCH, PLLC - AA26002103, and are issued only for the specific project noted on these drawings. Any reproductions, revisions, or modifications of these documents without the expressed written consent of Fugleberg Koch, PLLC is prohibited by law.

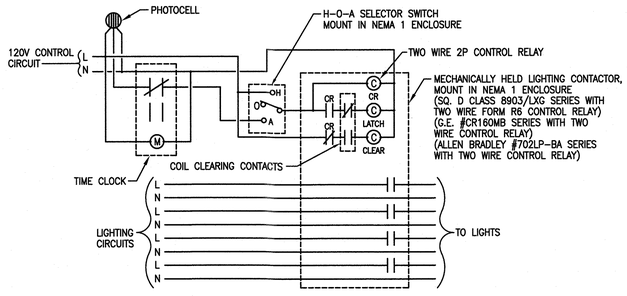

NOTE:
PROVIDE, INSTALL & CONNECT ADDITIONAL CONTACTS AND/OR CONTACTORS COMPLETE WITH ENCLOSURES AS REQUIRED PER APPLICATION, SEE ELECTRICAL DRAWINGS TO DETERMINE EXACT NUMBER OF POLES. SEE ELECTRICAL DRAWINGS FOR ACTUAL CIRCUIT NUMBERS. PROVIDE MINIMUM OF (2) ADDITIONAL/SPARE CONTACTS.

6 CONTACTOR 'LC1' SCHEMATIC – PHOTOCELL & TIMECLOCK CONTROLLED

SCALE: NTS

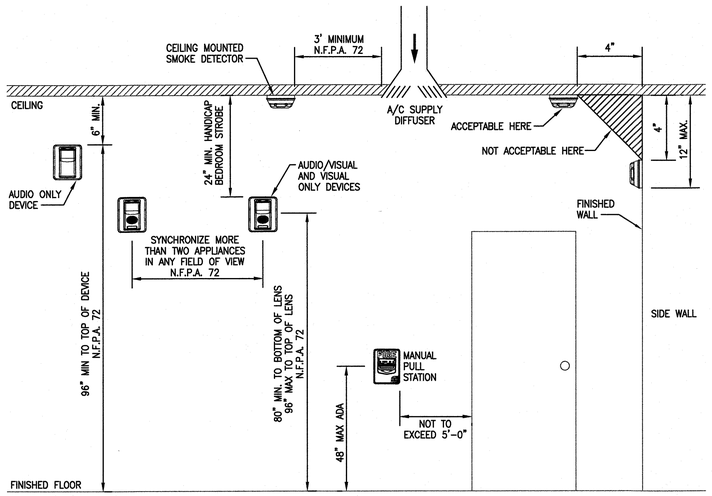

5 FIRE ALARM MOUNTING HEIGHT DETAIL

SCALE: NTS

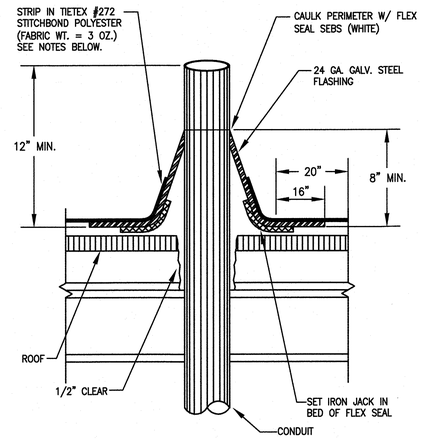

NOTES:
1. ALL SURFACES TO BE CLEAN (FREE OF DIRT, GREASE, SCALE, PAINT, ETC.)
2. WIRE BRUSH ALL LOOSE MATERIAL AS REQUIRED.
3. PRIME EXISTING ROOF AND FLASHING W/ SB ELASTOMERIC PRIMER.
4. 5 COURSE: 2 PLYS TIETEX W/ SB ELASTOMERIC GEL (FEATHER SECOND PLY) AT MIN. 40 MIL UNCURED PER COURSE.
5. TOP COAT W/ K-2 EXTREME DUTY ELASTOMER (MATCH ROOF COLOR)
6. DETAIL SHOW FOR WEATHERPROOFING PENETRATION ONLY. CONTRACTOR SHALL PROVIDE FIRESTOPPING AS REQUIRED TO MAINTAIN FIRE RATING OF ROOF.

4 ROOF PENETRATION WEATHERPROOF DETAIL

SCALE: NTS

Product Information HILTI

Firestop Putty Pad (CP 617, CP 617L and CP 617XL)

Product description
- A moldable firestop putty designed to help protect electrical outlet boxes

Product features
- Applied by hand
- Fast installation

Areas of application
- Protection of electrical outlet boxes

For use with
- Gypsum wall assemblies with wood or metal studs

Examples
- Where two outlets are within a single stud/cavity or within 24" measured horizontally (not back to back unless specified by the specific UL approval)

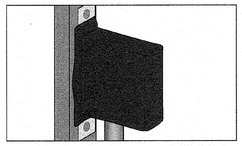

Technical Data*	CP 617
Dimensions (LxWxH)	CP 617: 6" x 7" x 1/8" (15 x 18 x 0.3 cm) CP 617L: 7" x 7" x 1/8" (18 x 18 x 0.3 cm) CP 617XL: 9" x 9" x 1/8" (23 x 23 x 0.3 cm)
Consistency	Moldable putty
Color	Red
Application temperature	40°F (5°C) to 90°F (30°C)
Storage temperature	40°F (5°C) to 104°F (40°C)
Curing time	Non-curing
Density	1.48 g/cm³
Intumescent activation	Approx. 220°F to 250°F (104°C to 121°C)
Volatile solvents	None
Asbestos fibers	None
Surface burning characteristics (ASTM E 84-06)	Flame Spread: 15 Smoke development: 10
Sound transmission classification (ASTM E 90-97)	59 (Relates to specific construction)
Tested in accordance with • UL 263 • ASTM E 84 • ASTM G21	

*At 73°F (23°C) and 50% relative humidity

WALL OPENING PROTECTIVE DEVICE FIRE RESISTANCE CLASSIFICATION SEE PRODUCT CATEGORY IN UL FIRE RESISTANCE DIRECTORY 6917

FM APPROVED

Installation instructions for CP 617

Notice
- Before handling, read Material Safety Data Sheet and product label for safe usage and health information.
- Instructions below are general guidelines — always refer to the applicable listing (CLXU) in the UL Fire Resistance Directory or Hilti Firestop Systems Guide for complete installation information

Application of firestop putty
1. After ensuring box is cleaned of loose debris, dirt, oil, moisture, frost and wax, remove label from one side of pad. For a 1 to 2 hour fire rating, one CP 617 pad is required. Exposed side of pad is placed against box.
2. CP 617 Firestop Putty Pads are to be installed to completely cover the exterior surfaces of the outlet box (except for the side of the outlet box against the stud) and completely seal against the stud within the stud cavity.
3. Preshape CP 617 to fit around conduit or cables.
4. Press CP 617 to all sides of electrical box.
5. Remove other side of label.

Not for use
- In areas exposed to water

Storage
- Store only in the original packaging in a location at temperatures 40°F (5°C) to 104°F (40°C)

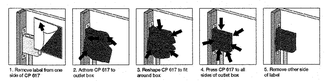

Hilti Firestop
Saving lives through innovation and education

Hilti. Outperform. Outlast.

Hilti, Inc. (U.S.) 1-800-879-8000 • www.us.hilti.com • en español 1-800-879-5000 • Hilti Firestop Systems Guide

3 OUTLET BOX MOUNTED IN FIRE RATED WALL

SCALE: NTS

UL/cUL SYSTEM NO. W-J-1020

METAL PIPE THROUGH CONCRETE WALL OR BLOCK WALL

F-RATING = 2-HR.
T-RATING = 0-HR. OR 1/4-HR.
L-RATING AT AMBIENT = LESS THAN 1 CFM/SQ. FT.
L-RATING AT 400°F = 4 CFM/SQ. FT.

WJ1020a.091699

FRONT VIEW

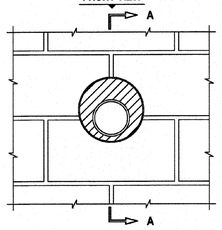

SECTION A-A

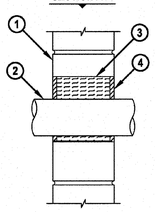

1. CONCRETE WALL ASSEMBLY (2-HR. FIRE-RATING):
   A. LIGHTWEIGHT OR NORMAL WEIGHT CONCRETE WALL (MIN. 5" THICK).
   B. ANY UL/ULC CLASSIFIED CONCRETE BLOCK WALL.
2. PENETRATING ITEM TO BE ONE OF THE FOLLOWING:
   A. MAXIMUM 4" NOMINAL DIAMETER COPPER PIPE.
   B. MAXIMUM 4" NOMINAL DIAMETER STEEL CONDUIT.
   C. MAXIMUM 4" NOMINAL DIAMETER EMT.
3. MINERAL WOOL (MIN. 4 PCF DENSITY), BACKER ROD, OR HILTI CF 128 FILLER FOAM TO BE USED AS A BACKER.
4. HILTI FS-ONE INTUMESCENT FIRESTOP SEALANT:
   A. MINIMUM 1/4" DEPTH WHEN EMT OR STEEL CONDUIT IS THE PENETRATING ITEM.
   B. MINIMUM 1/2" DEPTH WHEN COPPER PIPE IS THE PENETRATING ITEM.

NOTES : 1. MAXIMUM DIAMETER OF OPENING = 8".
2. ANNULAR SPACE = MINIMUM 3/4", MAXIMUM 3-1/2".
3. FOR HOLLOW BLOCK WALLS, USE NO. 8 STEEL WIRE MESH TO AID IN THE INSTALLATION.

HILTI FIRESTOP SYSTEMS	HILTI, Inc. Tulsa, Oklahoma USA (918) 252-6000	Sheet 1 of 1	Scale 1/8" = 1"	Date SEPT. 16, 1999	Drawing No. WJ 1020e

Saving Lives through Innovation and Education

2 UL FIRE RATED DETAIL (W-J-1020)

SCALE: NTS

UL/cUL SYSTEM NO. W-L-1175

METAL PIPE THROUGH GYPSUM WALL ASSEMBLY

F-RATING = 1-HR. OR 2-HR.
T-RATING = 0-HR.
L-RATING AT AMBIENT = 1 CFM/SQ. FT.
L-RATING AT 400°F = 1 CFM/SQ. FT.

WL1175b.092296

FRONT VIEW

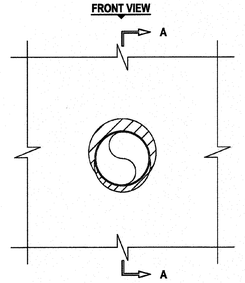

SECTION A-A

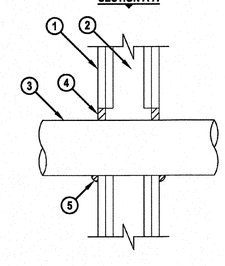

1. GYPSUM WALL ASSEMBLY (UL/cUL CLASSIFIED U300 OR U400 SERIES) (1-HR. OR 2-HR. FIRE-RATING) (2-HR. SHOWN).
2. [NOT SHOWN] WOOD STUDS TO CONSIST OF NOMINAL 2" x 4" LUMBER. STEEL STUDS TO BE MINIMUM 2-1/2" WIDE.
3. PENETRATING ITEM TO BE ONE OF THE FOLLOWING :
   A. MAXIMUM 4" NOMINAL DIAMETER EMT.
   B. MAXIMUM 4" NOMINAL DIAMETER STEEL CONDUIT.
4. MINIMUM 5/8" DEPTH HILTI CP 618 FIRESTOP PUTTY STICK.
5. MINIMUM 1/4" CROWN HILTI CP 618 FIRESTOP PUTTY STICK AT POINT OF CONTACT.

NOTES : 1. MAXIMUM DIAMETER OF OPENING = 5-1/2".
2. ANNULAR SPACE = MINIMUM 0", MAXIMUM 1".

Hilti Firestop Systems	HILTI, Inc. Tulsa, Oklahoma USA (918) 252-6000	Sheet 1 of 1	Scale 3/16" = 1"	Date Mar. 22, 2006	Drawing No. WL 1175b

Saving Lives through Innovation and Education

1 UL FIRE RATED DETAIL (W-L-1175)

SCALE: NTS

LAKE COUNTY BUILDING SERVICES
Any errors or omissions in these plans shall be made to conform with the applicable code requirements per Florida Building Code, in accordance with Section 107. Plans were reviewed for code compliance and shall be kept on job site.

RECEIVED FEB 14 2019

PERMIT REVIEW STAMP

ISSUE HISTORY

No.	Date	Description
1	02/08/2019	ISSUE FOR PERMIT

REVISION HISTORY

No.	Date	Description

© 2015 These documents are the property of FUGLEBERG KOCH, P.L.L.C. (A0800218), and are issued only for the specific project noted on these drawings. Any reproductions, revisions, or modifications of these documents without the expressed written consent of Ugleberg Koch, P.L.L.C. is prohibited by law.

FUGLEBERG KOCH
2555 Temple Trail, Winter Park, FL 32789 (407) 629-0595
www.fuglebergkoch.com BR569

CONSULTANT

Joseph, Lawrence & Co Consulting Engineers
1180 HARWOOD AVE. SUITE 3000
ALTAMONTE SPRINGS, FLORIDA 32714
TEL: 321.972.4446
WWW.JLCENG.COM
CA NO. 28730

JLC 17.0137.00

BLAKE L. SUDDETH
No. 69060
STATE OF FLORIDA
PROFESSIONAL ENGINEER

Blake Lawrence Suddeth
P.E. #: 69060

Drawn:	MJR/KCM
Checked:	BLS/AJB
Approved:	BLS/AJB
Date:	02/08/2019
Project #:	5389

SUMMER BAY APTS. II
LAKE COUNTY, FL

DETAILS - ELECTRICAL

E6.04

F.A.C. 61G15-32.008 DESIGN OF FIRE ALARMS & DETECTION SYSTEMS

61G15–32.008 DESIGN OF FIRE ALARM AND DETECTION SYSTEM COMPLIANCE NOTES FOR APARTMENTS AND CLUBHOUSE:

APPLICABLE CODES:
FBC FLORIDA BUILDING CODE (2017) 6TH EDITION
FFPC FLORIDA FIRE PREVENTION CODE (2017) 6TH EDITION
- NFPA 1 FIRE CODE (2015) FLORIDA EDITION
- NFPA 101 LIFE SAFETY CODE (2015) FLORIDA EDITION

NFPA 70 NATIONAL ELECTRIC CODE (2014)
NFPA 72 NATIONAL FIRE ALARM & SIGNALING CODE (2013)
AHJ – LAKE COUNTY, FLORIDA – LOCAL CODES & AMENDMENTS

A. DESIGN INTENT

1. SYSTEM TYPE: MASTER FIRE ALARM CONTROL PANEL LOCATED IN CLUBHOUSE SHALL BE AN ADDRESSABLE PANEL BY EDWARDS, HONEYWELL, NOTIFIER, SILENT KNIGHT, OR APPROVED EQUIVALENT. SUB–PANEL FACP'S IN EACH APARTMENT BUILDING SHALL BE ADDRESSABLE TYPES.
2. SEE SYMBOL LEGEND ON THIS SHEET.
3. SEE FIRE ALARM RISER DIAGRAM(S) THIS SHEET.
4. CABLING REQUIREMENTS:
   a. WIRING METHOD: THE SYSTEM WILL BE FREE WIRED USING APPROPRIATE STRAPS, TIES, FITTINGS, ETC. TO PREVENT DAMAGE TO THE WIRING.
   b. INITIATION CIRCUITS (LOOP): INITIATION LOOP CONDUCTORS SHALL BE WEST PENN #D991 FOR 3000'0" IN LENGTH AND LESS. WEST PENN #D995 SHALL BE USED FOR CIRCUITS OVER 3000'0" IN LENGTH. BELOW GRADE, WET OR DAMP LOCATION INSTALLED CABLE, INCLUDING CABLE INSTALLED ON THE TOP OF EXTERIOR WALKWAYS, SHALL BE WEST PENN AQUASEAL MULTI–CONDUCTOR (14 GAUGE), UNLESS NOTED OTHERWISE, SHALL BE INSTALLED IN CONDUIT.
   c. SIGNAL CIRCUITS: SIGNAL CIRCUITS SHALL BE #14 AWG THWN 19 STRAND COPPER (USE #12 AWG IF VOLTAGE DROP EXCEEDS MANUFACTURER'S SPECIFICATIONS).
   d. ANNUNCIATOR CIRCUITS: #14 AWG THWN 19 STRAND COPPER (USE #12 AWG IF VOLTAGE DROP EXCEEDS MANUFACTURER'S SPECIFICATIONS).
   e. EACH AND EVERY WIRE SHALL BE LABELED AT EACH END WITH SLC #, CHANNEL # OR SIGNAL #. EACH SEPARATE CIRCUIT, INITIATION, SIGNAL AND AUXILIARY SHALL HAVE A SPECIFIC NUMBER. LABEL EACH CONDUCTOR BY THIS CIRCUIT NUMBER AT THE CONTROL CONNECTIONS AND AT EACH TERMINAL CONNECTION IN THE TERMINAL CABINETS.
5. FIRE RATINGS REQUIRED FOR SURVIVABILITY: UNLESS NOTED OTHERWISE, PATHWAY SURVIVABILITY SHALL BE LEVEL 0 OR 1.

B. DEVICE LOCATIONS AND RELATED SYSTEMS

1. ALL INITIATION AND NOTIFICATION DEVICES ARE SHOWN ON ELECTRICAL POWER AND SYSTEMS PLANS WITHIN THIS ELECTRICAL DRAWING SET.
2. CONNECTIONS TO OTHER SYSTEMS: PROVIDE RELAYS FOR OTHER LOCAL CONTROL SUCH AS HVAC SHUTDOWN AND FIRE/SMOKE DAMPER RELEASE. RELAYS SHALL BE 10 AMP RATED RELAYS. UPON ACTIVATION OF THE FIRE ALARM SYSTEM, THE RELAY SHALL ACTIVATE AND SHUTDOWN THE CONTROLLED EQUIPMENT. LOCATE ALL RELAYS WITHIN 36" OF EQUIPMENT CONTROLLED. PROVIDE WEATHERPROOF UNITS WHERE INDICATED OR INSTALL IN WEATHERPROOF BOXES.

C. STROBE INTENSITY AND SPEAKER OUTPUT RATINGS

1. PER NFPA 72 SECTION 18.4.3 AUDIBLE SIGNALS SHALL BE AT LEAST 15dB ABOVE AVERAGE AMBIENT SOUND LEVEL OR 5dB ABOVE MAXIMUM SOUND LEVEL, WHICHEVER IS GREATER.
2. ALL VISUAL NOTIFICATION DEVICES SHALL HAVE A MINIMUM 75CD CANDELA RATING PER FBC.
3. AUDIBLE APPLIANCES FOR SLEEPING AREAS SHALL PRODUCE A LOW FREQUENCY ALARM SIGNAL THAT COMPLIES WITH NFPA SECTION 18.4.5.3.

D. CIRCUIT CLASSES

INITIATING DEVICE CIRCUITS – CLASS B. SIGNALING LINE CIRCUITS – CLASS B. NOTIFICATION APPLIANCE CIRCUIT – CLASS B.

E. FUNCTIONS

SEE SEQUENCE OF OPERATIONS THIS SHEET.

F. FIRE ALARM TYPE AND ZONING

1. FIRE ALARM SYSTEM IS AN ADDRESSABLE TYPE. SUB–PANELS ARE ADDRESSABLE TYPE.
2. INITIATING DEVICES SHALL BE ZONED BY BUILDING.
3. EVACUATION SIGNALS SHALL BE ZONED BY BUILDING.

G. SURGE PROTECTION

DITEK SURGE PROTECTION DEVICES DEVICES SHALL BE PROVIDED AT EACH CONNECTION TO MAIN POWER AND WHERE A CIRCUIT ENTERS/EXITS THE BUILDING. ALL SURGE/TRANSIENT SUPPRESSORS MUST BE CONNECTED TO APPROVED BUILDING GROUND.

H. ENVIRONMENTAL FACTORS

NO SPECIAL ENVIRONMENTAL FACTORS APPLY. FIRE ALARM DEVICES AND EQUIPMENT TO BE INSTALLED OUTDOORS IN EXTERIOR LOCATIONS SHALL BE SPECIFICALLY DESIGNED AND U.L. LISTED AS WEATHER AND WATERPROOF.

I. SITE PLAN

AN ELECTRICAL SITE PLAN HAS BEEN PROVIDED ON SHEET E1.01 INDICATING THE LOCATIONS OF MASTER FACP IN CLUBHOUSE AND SUB PANEL FACP'S IN APARTMENT BUILDINGS.

J. AREA SMOKE DETECTION

1. WHERE SMOKE DETECTORS ARE USED TO PROVIDE AREA COVERAGE, THEY SHALL BE LOCATED IN ACCORDANCE WITH NFPA 72 SECTION 17.7.3 "LOCATION AND SPACING" AND NFPA SECTION 29.8.3.4 "SPECIFIC LOCATION REQUIREMENTS" FOR THE APPLICABLE CONDITIONS.
2. SMOKE ALARMS AND SMOKE DETECTORS SHALL NOT BE LOCATED WHERE AMBIENT CONDITIONS, INCLUDING HUMIDITY AND TEMPERATURE, ARE OUTSIDE THE LIMITS SPECIFIED BY THE MANUFACTURER'S PUBLISHED INSTRUCTIONS.
3. SMOKE ALARMS AND SMOKE DETECTORS SHALL NOT BE LOCATED WITHIN UNFINISHED ATTICS OR GARAGES OR IN OTHER SPACES WHERE TEMPERATURES CAN FALL BELOW 40°F OR EXCEED 100°F.
4. SMOKE ALARMS AND SMOKE DETECTORS SHALL NOT BE INSTALLED WITHIN 10 FT FROM A STATIONARY OR FIXED COOKING APPLIANCE, UNLESS LISTED FOR INSTALLATION IN CLOSE PROXIMITY TO COOKING APPLIANCES OR MEETING THE ADDITIONAL CRITERIA LIST IN SECTION 29.8.3.4(4).
5. SMOKE ALARMS AND SMOKE DETECTORS SHALL NOT BE INSTALLED WITHIN 3 FT FROM THE FOLLOWING: A DOOR TO A BATHROOM CONTAINING A SHOWER OR TUB, SUPPLY AIR REGISTERS, AND/OR THE TIP OF THE BLADE OF A CEILING PADDLE FAN.

K. SMOKE STRATIFICATION

SMOKE STRATIFICATION IS NOT EXPECTED TO OCCUR IN THIS/THESE INTERIOR BUILDING(S).

L. PERFORMANCE BASED DESIGN (PBD)

THE DESIGN IS DERIVED FROM A PRESCRIPTIVE DESIGN BASIS.

M. EVACUATION SIGNAL

EVACUATION SIGNAL IS A GENERAL SIGNAL ☐ BY FLOOR ☒ BY BUILDING.

N. WIRING REQUIREMENTS

1. WIRING SHALL BE IN ACCORDANCE WITH NFPA 72 AND NFPA 70 ARTICLES 300, 760, 770, AND 800, AS APPLICABLE, UNLESS OTHERWISE NOTED.
2. PROTECTION AGAINST DAMAGE: INSTALL WIRING IN METAL RACEWAY. CONCEAL RACEWAY EXCEPT IN UNFINISHED SPACES AND AS INDICATED.
3. FIRE ALARM DEVICES AND EQUIPMENT TO BE INSTALLED OUTDOORS IN EXTERIOR LOCATIONS SHALL BE SPECIFICALLY DESIGNED AND U.L. LISTED AS WEATHER AND WATERPROOF. PROVIDE WEATHERPROOF NEOPRENE GASKETS BETWEEN WALL MOUNTING SURFACE AND FIRE ALARM DEVICE FOR ALL DEVICES MOUNTED OUTDOORS.

O. OPERATIONS AND MAINTENANCE PROCEDURES

1. PROVIDE THE SERVICES OF A FACTORY–AUTHORIZED SERVICE REPRESENTATIVE TO DEMONSTRATE THE SYSTEM AND TRAIN OWNER'S MAINTENANCE PERSONNEL AS SPECIFIED BELOW:
   a. TRAIN OWNER'S MAINTENANCE PERSONNEL IN THE LOCATION OF DEVICES, BOXES, PROCEDURES AND SCHEDULES INVOLVED IN OPERATING, TROUBLESHOOTING, SERVICING, AND PREVENTIVE MAINTAINING OF THE SYSTEM. PROVIDE A MINIMUM OF 4 HOURS' TRAINING. TRAINING SHALL INCLUDE A COMPLETE PROJECT WALKDOWN WITH OWNER'S AUTHORIZED REPRESENTATIVE TO IDENTIFY DEVICE LOCATIONS, JUNCTION BOX LOCATIONS AND SURGE SUPPRESSION MODULE LOCATIONS.
   b. SCHEDULE TRAINING WITH THE OWNER AT LEAST SEVEN WORKING DAYS IN ADVANCE.

(6) SYSTEM TEST AND DOCUMENTATION REQUIREMENTS

FIRE ALARM CONTRACTOR SHALL PERFORM THE TESTING LISTED BELOW AND PREPARE RECORDS PER NFPA 72 SECTION 14.6.

☒ INITIAL ACCEPTANCE TESTING IN ACCORDANCE WITH NFPA 72 SECTION 14.4.1 FOR ALL NEW APPLIANCE AND CIRCUITS.
☐ RE–ACCEPTANCE TESTING IN ACCORDANCE WITH NFPA 72 14.4.2 FOR MODIFICATIONS OF EXISTING CIRCUITS.

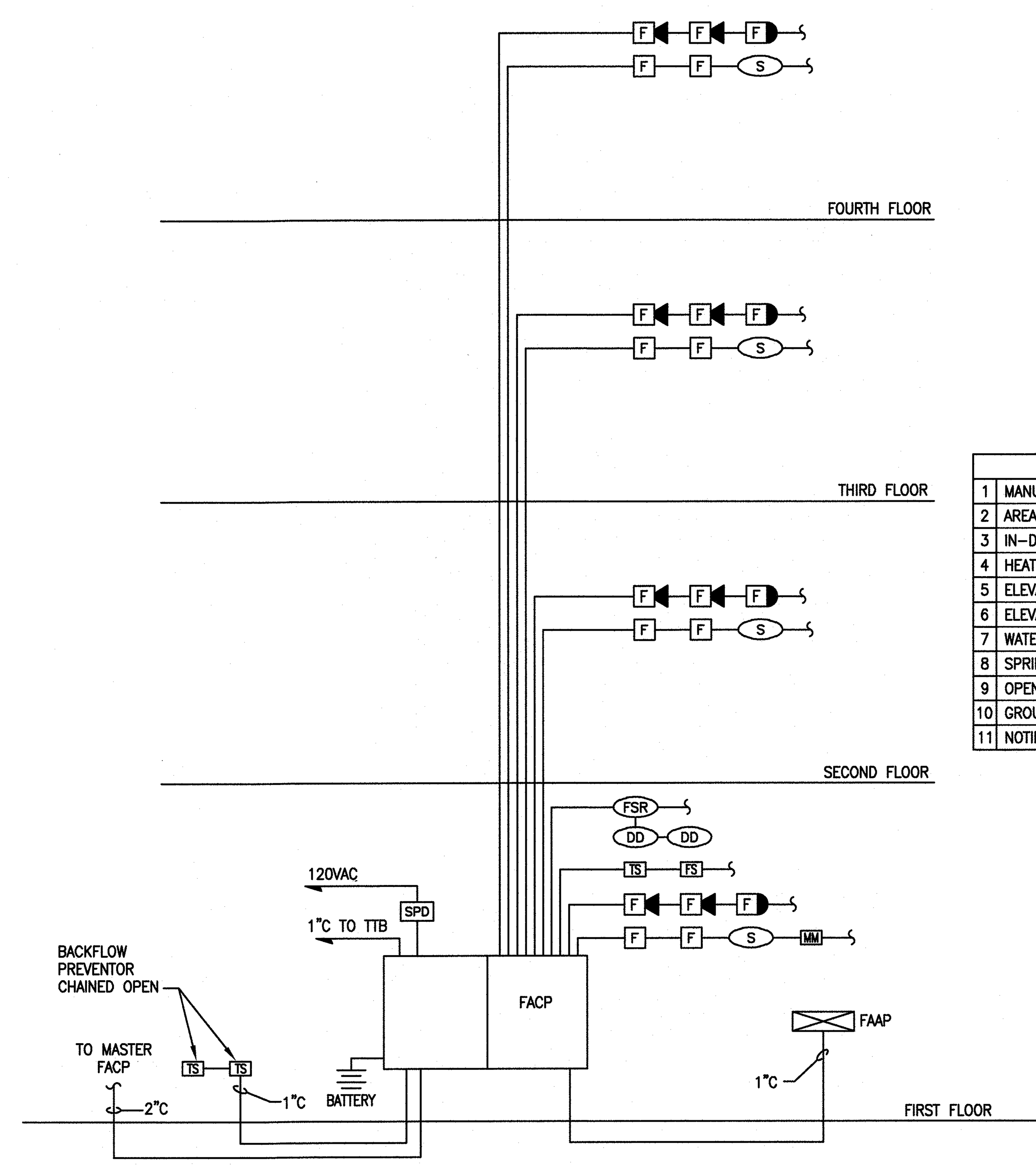

FIRE ALARM SYSTEM RISER DIAGRAM

NO SCALE

FIRE ALARM RISER - GENERAL NOTES:

A. FIRE ALARM SYSTEM RISER DIAGRAM IS DIAGRAMMATICAL. SEE FLOOR PLANS FOR EXACT QUANTITIES OF DEVICES. WIRING SHALL BE AS RECOMMENDED BY SYSTEMS MANUFACTURER.

B. DO NOT SCALE ELECTRICAL DRAWING FOR ANY DIMENSIONS.

C. ALL WORK SHALL COMPLY WITH THE 2014 NATIONAL ELECTRIC CODE, NATIONAL, STATE AND LOCAL CODES. PROVIDE GROUNDING AND BONDING PER NEC 250.

D. PROVIDE 120VAC SURGE SUPPRESSION AND LOW VOLTAGE FIRE ALARM CIRCUIT SURGE SUPPRESSION.

E. PROVIDE NOTIFICATION APPLIANCE CIRCUITS AND POWER SUPPLIES AS REQUIRED.

F. REFER TO POWER AND SYSTEMS FLOOR PLANS FOR FIRE ALARM EQUIPMENT COUNT.

G. PROVIDE 1" CONDUIT FROM FACP TO TTB.

H. ALL FIRE ALARM CIRCUITS SHALL BE IN CONDUIT WHERE REQUIRED BY CODE OR AHJ. PROVIDE ALL REQUIRED MONITORING AND CONTROL OF MECHANICAL UNITS AS REQUIRED BY AUTHORITY HAVING JURISDICTION.

I. VERIFY FIRE PROTECTION FLOW AND TAMPER SWITCH LOCATION WITH FIRE PROTECTION DRAWINGS. PROVIDE ALL REQUIRED MONITORING OF FIRE PROTECTION SYSTEM.

FIRE ALARM SYMBOL LEGEND

Symbol	Description	Symbol	Description
FACP	FIRE ALARM CONTROL PANEL	F M	FIRE ALARM MINI HORN
FAAP	FIRE ALARM ANNUNCIATOR PANEL	F M	FIRE ALARM MINI HORN & STROBE COMBINATION
F	FIRE ALARM PULL STATION	SPD	SURGE PROTECTOR DEVICE
F	FIRE ALARM HORN	S	SMOKE DETECTOR
F	FIRE ALARM HORN & STROBE COMBINATION	H	HEAT DETECTOR
F	FIRE ALARM HORN & STROBE COMBINATION (CEILING MTD)	DD	DUCT DETECTOR
F	FIRE ALARM STROBE	RTS	REMOTE TEST STATION FOR DUCT DETECTOR
		FSR	FIRE ALARM SHUT DOWN RELAY

		CONTROL UNIT ANNUNCIATION							NOTIFICATION	FIRE SAFETY CONTROL										
		ACTUATE COMMON ALARM SIGNAL INDICATOR	ACTUATE AUDIBLE ALARM SIGNAL	ACTUATE COMMON SUPERVISORY SIGNAL INDICATOR	ACTUATE AUDIBLE SUPERVISORY SIGNAL	ACTUATE COMMON TROUBLE SIGNAL INDICATOR	ACTUATE COMMON TROUBLE SIGNAL	ACTUATE ALARM INDICATOR	ACTUATE EVACUATION SIGNAL	DISPLAY/PRINT CHANGE OF STATUS	TRANSMIT FIRE ALARM SIGNAL TO SUPERVISING STATION	TRANSMIT SUPERVISORY SIGNAL TO SUPERVISING STATION	TRANSMIT TROUBLE SIGNAL TO SUPERVISING STATION	RELEASE MAGNETICALLY HELD SMOKE DOORS	RECALL ELEVATORS TO PRIMARY RECALL FLOOR	RECALL ELEVATORS TO ALTERNATE RECALL FLOOR	CLOSE SMOKE/FIRE DAMPERS IN RATED WALLS	SHUTDOWN AFFECTED ELEVATOR POWER	SHUTDOWN AFFECTED AIR HANDLING UNIT(S)	UNLOCK SECURED EGRESS EXITS
	SYSTEM INPUTS	A	B	C	D	E	F	G	H	I	J	K	L	M	N	O	P	Q	R	S
1	MANUAL FIRE ALARM BOXES	●	●					●	●	●	●			●						●
2	AREA SMOKE DETECTORS	●	●					●	●	●	●			●			●			●
3	IN–DUCT SMOKE DETECTORS	●	●					●	●	●	●	●		●			●		●	●
4	HEAT DETECTOR IN ELEVATOR SHAFT/PIT	●	●							●	●						●	●		●
5	ELEVATOR LOBBY SMOKE DETECTORS – FIRST FLOOR	●	●							●	●			●		●	●			●
6	ELEVATOR LOBBY SMOKE DETECTORS – UPPER FLOORS	●	●							●	●			●	●		●			●
7	WATER FLOW	●	●					●		●	●			●	●					●
8	SPRINKLER CONTROL VALVE			●	●					●		●								
9	OPEN CIRCUIT					●	●						●							
10	GROUND FAULT					●	●						●							
11	NOTIFICATION APPLIANCE CIRCUIT SHORT					●	●						●							

FIRE ALARM MATRIX OF OPERATIONS

NO SCALE

F.A.C. 61G15-32.008

THE CONTRACTOR'S FIRE ALARM ENGINEER, AS THE "DELEGATED ENGINEER" SHALL BE THE "ENGINEER OF RECORD" FOR THE FIRE ALARM SYSTEM AND SHALL PREPARE COMPLETE AND FINAL FIRE ALARM DESIGN DOCUMENTS WITH BATTERY CALCULATIONS, SIGNED AND SEALED, AS DEFINED BY THE F.A.C. 61G15–32.008 AND SHALL SUBMIT REQUIRED DOCUMENTATION TO THE ARCHITECT FOR REVIEW BY THEIR "PRIME PROFESSIONAL ENGINEER" CONSULTANT TO REVIEW FOR BASIC DESIGN CRITERIA. UPON APPROVAL THE CONTRACTOR SHALL SUBMIT SIGNED AND SEALED DOCUMENTS TO THE AHJ FOR REVIEW AND APPROVAL.

SUBMITTALS

FIRE ALARM SYSTEM SHOP DRAWINGS, SPECIFICATIONS, BATTERY CALCULATIONS, AND DETAILS SHALL BE PROVIDED BY THE SELECTED FIRE ALARM CONTRACTOR UNDER SEPARATE PERMIT FOR REVIEW AND APPROVAL PRIOR TO INSTALLATION.

LAKE COUNTY BUILDING SERVICES
Any errors or omissions in these plans shall be made to conform with the applicable code requirements per Florida Building Code, in accordance with Section 107. Plans were reviewed for code compliance and shall be kept on job site.

RECEIVED FEB 14 2019

PERMIT REVIEW STAMP

ISSUE HISTORY

No.	Date	Description
1	02/08/2019	ISSUE FOR PERMIT

REVISION HISTORY

No.	Date	Description

FUGLEBERG KOCH
2555 Temple Trail, Winter Park, FL 32789 (407) 629-0595
www.fuglebergkoch.com BR569

CONSULTANT
Joseph, Lawrence & Co
Consulting Engineers
1180 HARWOOD AVE. SUITE 3000
ALTAMONTE SPRINGS, FLORIDA 32714
TEL: 321.972.4466
WWW.JLCENG.COM
CA NO. 28730

JLC 17.0137.00
Blake Lawrence Suddeth
P.E. #: 69060

SUMMER BAY APTS. II	Drawn: MJR/KCM
	Checked: BLS/AJB
	Approval: BLS/AJB
	Date: 02/08/2019
LAKE COUNTY, FL	Project #: 5389

DETAILS - ELECTRICAL

E6.05

© 2015 These documents and their contents are the property of FUGLEBERG KOCH, PLLC - AA26002103, and are issued only for the specific project noted on these drawings. Any reproductions, revisions, or modifications of these documents without the expressed written consent of Fugleberg Koch, PLLC is prohibited by law.

LEGEND

- DIRECTION OF FLOW IN PIPE
- PITCH PIPE DOWN IN DIRECTION OF ARROW
- PIPE UP
- PIPE DOWN
- EJ — EXPANSION JOINT
- FLEXIBLE PIPE CONNECTOR
- BALL VALVE
- CHECK VALVE, HORIZONTAL SWING
- GATE VALVE
- BUTTERFLY VALVE
- GLOBE VALVE
- BALANCING VALVE
- BC — BALANCING COCK
- STRAINER, Y-TYPE AND BLOWOFF VALVE
- RV — PRESSURE RELIEF VALVE (WATER)
- PRV — PRESSURE REDUCING VALVE
- MAV — MANUAL AIR VENT
- SOLENOID VALVE
- VALVE OS & Y
- CAPPED LINE
- SAN — SANITARY SEWER (ABOVE GRADE)
- SAN — SANITARY SEWER (BELOW GRADE)
- DOMESTIC COLD WATER
- BP — BOOSTED PRESSURE DOMESTIC COLD WATER
- DOMESTIC HOT WATER
- DOMESTIC HOT WATER RETURN
- CD — CONDENSATE DRAIN (BELOW GRADE)
- CD — CONDENSATE DRAIN (ABOVE GRADE)
- ST — STORM SEWER (BELOW GRADE)
- ST — STORM SEWER (ABOVE GRADE)
- EO — STORM EMERGENCY OVERFLOW PIPING
- GR — GREASE SEWER (BELOW GRADE)
- GR — GREASE SEWER (ABOVE GRADE)
- SCW — SOFT COLD WATER
- VENT
- G — GAS LINE (BELOW GRADE)
- G — GAS LINE (ABOVE GRADE)
- POINT OF CONNECTION NEW TO EXISTING
- POINT OF REMOVAL FOR DEMOLITION
- ΔT — DELTA T (TEMPERATURE DIFFERENCE)
- A / 1 — PHOTO DETAIL OR SECTION IDENTIFICATION TARGET
  A = DETAIL NUMBER.
  B = SHEET NUMBER ON WHICH DETAIL IS LOCATED.
- HB — HOSE BIBB
- FD — FLOOR DRAIN
- HD — HUB DRAIN
- TD — TRENCH DRAIN
- A — COMPRESSED AIR (BELOW GRADE)
- A — COMPRESSED AIR (ABOVE GRADE)
- FLOOR CLEANOUT
- CLEANOUT
- EXTERIOR CLEANOUT
- HORIZONTAL CLEANOUT
- ITEMS TO BE REMOVED (DEMOLITION)
- FW — COLD FILTERED WATER
- SHOCK ABSORBER

NOTE:

SYMBOLS SHOWN ON THIS PLUMBING LEGEND ARE FOR REFERENCE PURPOSES ONLY. ALL OF THESE SYMBOLS MAY NOT BE USED FOR THIS PROJECT.

SPECIFICATIONS

PART 1 GENERAL

1.1 SECTION INCLUDES

A. GENERAL PROVISIONS SPECIFICALLY APPLICABLE TO DIVISION 15 SECTIONS, IN ADDITION TO DIVISION 1 – GENERAL REQUIREMENTS.

1.2 SCOPE

A. THE WORK SHALL INCLUDE THE PROVISIONS OF SYSTEMS, EQUIPMENT AND MATERIALS SPECIFIED IN THIS DIVISION AND AS CALLED FOR ON THE DRAWINGS. WORK SHALL ALSO INCLUDE SUPERVISION, OPERATION, METHODS AND LABOR FOR THE FABRICATION, START-UP AND TESTS FOR A COMPLETE OPERATIONAL PLUMBING INSTALLATION.

B. DRAWINGS FOR THE WORK ARE DIAGRAMMATIC IN NATURE AND ARE INTENDED TO CONVEY THE SCOPE OF THE INSTALLATION AND TO INDICATE THE GENERAL ARRANGEMENT AND LOCATIONS OF THE WORK. BECAUSE OF THE SCALE OF THE DRAWINGS, CERTAIN BASIC ITEMS SUCH AS PIPE FITTINGS, ACCESS PANELS, AND SLEEVES MAY NOT BE SHOWN. THIS CONTRACTOR SHALL BE RESPONSIBLE FOR SELECTING THE EQUIPMENT TO FIT THE SPACE PROVIDED. THE LOCATION AND SIZES FOR PIPE FITTINGS, SLEEVES, INSERTS, FIRE AND/OR SMOKE DAMPERS, AND OTHER BASIC ITEMS REQUIRED BY CODE AND OTHER SECTIONS SHALL BE COORDINATED AND INCLUDED FOR THE PROPER INSTALLATION OF THE WORK.

C. EQUIPMENT SPECIFICATIONS MAY NOT DEAL INDIVIDUALLY WITH MINUTE ITEMS REQUIRED SUCH AS COMPONENTS, PARTS, CONTROLS AND DEVICES WHICH MAY BE REQUIRED TO PRODUCE THE EQUIPMENT PERFORMANCE SPECIFIED OR AS REQUIRED TO MEET THE EQUIPMENT WARRANTIES. WHERE SUCH ITEMS ARE REQUIRED, THEY SHALL BE INCLUDED BY THE INSTALLER OF THE EQUIPMENT, WHETHER OR NOT SPECIFICALLY INDICATED IN THE CONTRACT DOCUMENTS WITH NO ADDITIONAL COST INCURRED.

D. WHERE NOTED ON THE DRAWINGS OR INDICATED IN OTHER SECTIONS OF THE SPECIFICATION, THE CONTRACTOR FOR THIS DIVISION SHALL INSTALL PLUMBING EQUIPMENT FURNISHED BY OTHERS, AND SHALL MAKE ALL FINAL CONNECTIONS. CONTRACTOR SHALL INSTALL EQUIPMENT AND SYSTEMS IN STRICT ACCORDANCE WITH MANUFACTURERS RECOMMENDATIONS.

E. COORDINATE WITH ALL TRADES IN SUBMITTAL OF SHOP DRAWINGS. TIGHT SPACE CONDITIONS SHALL BE DETAILED TO THE SATISFACTION OF ALL TRADES, SUBJECT TO THE REVIEW AND FINAL ACCEPTANCE OF THE ARCHITECT/ENGINEER. IN THE EVENT THAT THE CONTRACTOR INSTALLS HIS WORK BEFORE COORDINATING WITH OTHER TRADES OR SO AS TO CAUSE ANY INTERFERENCE WITH THE WORK OF THE OTHER TRADES THIS CONTRACTOR SHALL MAKE ALL REQUIRED CHANGES TO CORRECT THE CONDITION AT NO ADDITIONAL COST TO THE PROJECT.

F. EXAMINATION OF BIDDING DOCUMENTS:

1. EACH BIDDER SHALL EXAMINE THE BIDDING DOCUMENTS CAREFULLY AND NOT LATER THAN TEN (10) DAYS PRIOR TO THE DATE FOR RECEIPT OF BIDS, SHALL MAKE WRITTEN REQUEST TO THE ENGINEER FOR INTERPRETATION OR CORRECTION OF ANY AMBIGUITY, INCONSISTENCY OR ERROR THEREIN. ANY INTERPRETATION OR CORRECTION WILL BE ISSUED AS AN ADDENDUM BY THE ENGINEER. ONLY A WRITTEN INTERPRETATION OR CORRECTION TO BID DOCUMENTS BY ADDENDUM SHALL BE BINDING. NO BIDDER SHALL RELY UPON ANY INTERPRETATION OR CORRECTION GIVEN BY ANY OTHER METHOD.

G. FIRE PROTECTION:

THE FIRE PROTECTION CONTRACTOR SHALL PROVIDE ALL MATERIAL, LABOR, TRUCKING, HOISTING, ENGINEERING, SCAFFOLDING, SHOP DRAWINGS, INSURANCE, PERMITS, FEE'S, ETC. NECESSARY FOR THE FURNISHING AND INSTALLATION OF ALL RELATED WORK IN ACCORDANCE WITH THE CONTRACT DRAWINGS.

FIRE PROTECTION CONTRACTOR TO SUBMIT SIGNED AND SEALED DRAWINGS AND HYDRAULIC CALCULATIONS TO THE AUTHORITY HAVING JURISDICTION AS DEFINED IN 61G15 AND NFPA 13, SECTION 14-1.

H. SUBSTITUTIONS

1. EXCEPT AS PROVIDED BELOW, EACH BIDDER REPRESENTS THAT HIS BID IS BASED UPON THE MATERIALS AND EQUIPMENT DESCRIBED IN THE BIDDING DOCUMENTS.
2. NO SUBSTITUTIONS FOR OTHER MATERIALS AND EQUIPMENT WILL BE CONSIDERED UNLESS WRITTEN REQUEST HAS BEEN SUBMITTED TO THE ENGINEER FOR APPROVAL AT LEAST TEN (10) DAYS PRIOR TO THE DATE FOR RECEIPT OF BIDS. EACH SUCH REQUEST SHALL INCLUDE A COMPLETE DESCRIPTION OF THE PROPOSED SUBSTITUTE, THE NAME OF THE MATERIAL OR EQUIPMENT FOR WHICH IT IS TO BE SUBSTITUTED, DRAWINGS, CUTS, PERFORMANCE AND TEST DATA OR INFORMATION NECESSARY FOR A COMPLETE EVALUATION.
3. IF THE ENGINEER APPROVES ANY PROPOSED SUBSTITUTION, SUCH APPROVAL WILL BE ISSUED AS AN ADDENDUM FORWARDED TO ALL PARTICIPATING BIDDERS.
4. IF ANY BIDDER IS UNABLE TO PROCURE WRITTEN APPROVAL OF ANY SUBSTITUTION FROM THE ENGINEER PRIOR TO THE OPENING OF BIDS, THEN HE SHALL BASE HIS BID ON ITEMS AND SYSTEMS AS SPECIFIED IN BID DOCUMENTS.
5. SUBSTITUTIONS REQUESTED ON THE BID PROPOSAL FORM WHICH ARE PRIOR APPROVED BY THE ENGINEER WILL BE INCORPORATED INTO THE CONTRACT WITH THE SUCCESSFUL BIDDER.
6. REQUESTS FOR ANY SUBSTITUTIONS NOT SUBMITTED AND APPROVED IN ACCORDANCE WITH THE ABOVE INSTRUCTIONS WILL BE DENIED BY THE ENGINEER.

1.3 REGULATORY REQUIREMENTS

A. ALL INSTALLATIONS AND EQUIPMENT SHALL BE IN STRICT ACCORDANCE WITH ALL APPLICABLE STATUTES, CODES AND REGULATIONS OF THE GOVERNMENTAL BODIES HAVING JURISDICTION.
B. CONFORM TO 2017 FLORIDA BUILDING CODE.
C. CONFORM TO 2017 FLORIDA PLUMBING CODE.
D. CONFORM TO 2017 FLORIDA FIRE PREVENTION CODE.

1.4 CUTTING AND PATCHING

A. SUBMIT WRITTEN REQUEST IN ADVANCE OF CUTTING OR ALTERING ELEMENTS.
B. EMPLOY SKILLED AND EXPERIENCED INSTALLER TO PERFORM CUTTING AND PATCHING WHICH EFFECT:

1. STRUCTURAL INTEGRITY OF ELEMENT.
2. INTEGRITY OF WEATHER.
3. EFFICIENCY, MAINTENANCE, OR SAFETY OF ELEMENT.
4. VISUAL QUALITIES OF SIGHT.
5. WORK OF OWNER OR SEPERATE CONTRACTOR.

PART 2 PRODUCTS

2.1 PIPE HANGERS AND SUPPORTS

A. MANUFACTURERS:
1. B-LINE.
2. OTHER ACCEPTABLE MANUFACTURERS OFFERING EQUIVALENT PRODUCTS.
A) MICHIGAN HANGER.
B) PHD.

2.2 PIPING INSULATION: HOT WATER, HOT WATER RETURN, STORM PIPING

A. MANUFACTURERS:
1. OWENS-CORNING
2. JOHNS-MANVILLE
3. KNAUF
B. ASTM C547, RIGID MOLDED NON-COMBUSTIBLE FIBERGLASS INSULATION. 'K' VALUE .024 @ 75 DEGREES F.
C. VAPOR BARRIER JACKET, KRAFT PAPER WITH GLASS FIBER YARN AND BONDED TO ALUMINUM FILM. CLOSURE SYSTEM SHALL BE UL 181.
D. INSULATION THICKNESS 1-1/2"

2.3 PIPING: DRAINAGE WASTE, VENT, CONDENSATE AND STORM PIPING

A. PVC: ASTM D2665 SCHEDULE 40 PVC PIPING.
1. FITTINGS: ASTM D2665 SCHEDULE 40 PVC DWV FITTINGS.
2. JOINTS: ASTM D2564 SOLVENT CEMENT. JOINTS SHALL BE INSTALLED IN ACCORDANCE WITH ASTM D2855.

2.4 PIPING: WATER PIPING

A. CPVC PIPING & FITTINGS: ASTM D1784 PIPE COMPOUND CELL CLASS 24448.
1. JOINTS: ASTM F493 SOCKET TYPE WITH SOLVENT CEMENT ASTM F402 NSF INTERNATIONAL APPROVED MFG. COMPATIBLE.
2. FLOWGUARD GOLD CPVC PIPE AS MFG. BY NOVEON INC. OR SPEARS EVERTUFF CPVC CTS PLUMBING SYSTEM.

PART 3 INSTALLATION

A. INSTALL IN STRICT ACCORDANCE WITH MANUFACTURER'S INSTRUCTIONS.
B. PROVIDE NON-CONDUCTING DIELECTRIC CONNECTIONS WHEREVER JOINTING DISSIMILAR METALS.
C. ROUTE PIPING IN ORDERLY MANNER AND MAINTAIN GRADIENT.
D. INSTALL PIPING TO CONSERVE BUILDING SPACE AND NOT INTERFERE WITH USE OF SPACE.
E. GROUP PIPING WHENEVER PRACTICAL AT COMMON ELEVATIONS.
F. INSTALL PIPING TO ALLOW FOR EXPANSION AND CONTRACTION WITHOUT STRESSING PIPE, JOINTS, OR CONNECTED EQUIPMENT.
G. PROVIDE CLEARANCE FOR INSTALLATION OF INSULATION AND ACCESS TO VALVES AND FITTINGS.
H. PROVIDE ACCESS WHERE VALVES AND FITTINGS ARE NOT EXPOSED. COORDINATE SIZE AND LOCATION OF ACCESS DOORS WITH APPROPRIATE ARCHITECTURAL SECTION.
I. ESTABLISH ELEVATIONS OF BURIED PIPING OUTSIDE THE BUILDING TO ENSURE PROPER SLOPE AND COVER.
J. ESTABLISH ELEVATIONS OF EXISTING BURIED PIPING FOR CONNECTION TO NEW WORK TO ENSURE PROPER SLOPE AND COVER.
K. WHERE PIPE SUPPORT MEMBERS ARE WELDED TO STRUCTURAL BUILDING FRAMING, SCRAPE, BRUSH CLEAN, AND APPLY ONE COAT OF ZINC RICH PRIMER TO WELDING.
L. INSTALL WATER HAMMER SHOCK ARRESTORS AT EACH FIXTURE OR BATTERY OF FIXTURES WHERE REQUIRED. ARRESTORS SHALL BE FACTORY FABRICATED. INSTALL ARRESTORS AND SIZE PER PLUMBING AND DRAINAGE INSTITUTE STANDARD P.D.I. WH-201. ACCEPTABLE MANUFACTURERS ZURN, JOSAM, SIOUX CHIEF. PPP INC. FOR 1-11 FU'S PROVIDE PDI-A, FOR 12-32 FU'S PDI-B, 33-60 FU'S PDI-C, 61-113 FU'S PDI-D.

GENERAL NOTES

1. CONTRACTOR SHALL BE RESPONSIBLE FOR PROVIDING ALL NECESSARY FITTINGS AS REQUIRED BY ALL APPLICABLE CODES AND GOVERNING AUTHORITIES.
2. CONTRACTOR SHALL VERIFY AND CORRECT AS REQUIRED TO MEET ALL CODES AND REGULATIONS ANY POSSIBLE DISCREPANCIES BETWEEN TYPE AND SIZE OF CONNECTION SPECIFIED IN PLUMBING FIXTURE SCHEDULE AND FIXTURES ACTUALLY INSTALLED ON THE SITE.
3. ALL DRAINAGE PIPING 3" AND LARGER SHALL HAVE AN 1/8" PER FOOT SLOPE. ALL DRAINAGE PIPING 2-1/2" AND LESS SHALL HAVE A 1/4" PER FOOT SLOPE.
4. PROVIDE ACCESS PANELS FOR ALL VALVES LACATED WITHIN NON ACCESSIBLE CEILING AND WALLS. PROVIDE FIRE RATED PANEL IN RATED WALLS.
5. VALVES AND FITTINGS SHALL BE OF SAME SIZE OF LINE ON WHICH THEY ARE LOCATED, UNLESS OTHERWISE INDICATED ON DRAWINGS.
6. CONTRACTOR SHALL COORDINATE ALL WORK WITH OTHER TRADES.
7. CONTRACTOR SHALL FIELD VERIFY ALL GIVEN MEASUREMENTS PRIOR TO LAYING AND CONNECTING ALL SANITARY AND WASTE PIPING AND NOTIFY ARCHITECT OF ANY DISCREPANCIES.
8. AIR CHAMBERS SHALL NOT BE CONSIDERED AN EQUAL TO WATER ARRESTORS AS SPECIFIED.
9. CONTRACTOR SHALL BE RESPONSIBLE FOR MAINTAINING FIRE RATING AND WEATHERPROOFING INTEGRITY OF ALL PIPING AND PENETRATIONS.
10. ALL WATER SUPPLY AND SANITARY LINES SHALL BE RUN AS CLOSE TO PLANS AS POSSIBLE WITH NO CHANGES IN SIZING. PROVIDE FIRE RATED PANELS/BOXES FOR ALL PLUMBING DEVICES LOCATED IN RATED WALLS.
11. CONTRACTOR SHALL BE RESPONSIBLE FOR PROVIDING ALL NECESSARY SUPPORTING DEVICES FOR ALL FIXTURES INCLUDED IN CONTRACT OR HEREIN SPECIFIED OR OTHERWISE.
12. INSULATE ALL HOT WATER AND HOT WATER RETURN PIPING.
13. ALL DRAINAGE PIPING SHALL BE MARKED WITH THE SEAL OF APPROVAL OF THE NATIONAL SANITATION FOUNDATION.
14. DO NOT PENETRATE FOUNDATIONS WITH PIPING, COORDINATE WITH GENERAL CONTRACTOR TO DROP FOUNDATIONS AS REQUIRED TO CLEAR PLUMBING SERVICES WHERE ABSOLUTELY NECESSARY. ALL PIPING PENETRATING A BEARING WALL OR FOOTING MUST BE SLEEVED AND LOCATION APPROVED BY STRUCTURAL ENGINEER.
15. ROUTE ALL PIPING CONCEALED ABOVE CEILINGS, WITHIN WALLS, OR IN CHASES. PIPING EXPOSED SHALL BE SLOPED AND PAINTED TO MATCH ARCHITECTURAL FINISHES. PIPING IN MECHANICAL ROOMS MAY BE EXPOSED.
16. PROVIDE ACCESS PANELS TO ALL VALVES WITHIN CHASES OR ABOVE NON-ACCESSIBLE CEILINGS. REFER TO ARCHITECTURAL DRAWINGS FOR CEILING TYPES.
17. SEE ARCHITECTURAL DRAWINGS FOR EXACT LOCATIONS OF PLUMBING FIXTURE MOUNTING HEIGHTS, AND DIMENSIONS.
18. CONTRACTOR SHALL VERIFY INVERT ELEVATIONS OF SEWERS TO WHICH NEW SEWER LINES ARE TO BE CONNECTED BEFORE INSTALLATION OF NEW SEWER LINE.
19. ALL VENTS THROUGH ROOF SHALL BE MIN. 10'-0" FROM ANY AIR INTAKES.
20. CONTRACTOR SHALL INSTALL DIELECTRIC UNIONS AT CONNECTIONS OF DISSIMILAR METALS.
21. CONTRACTOR SHALL SUBMIT SHOP DRAWINGS (INCLUDING PIPE ROUTING AND EQUIPMENT LOCATIONS) TO ARCHITECT/ENGINEER FOR REVIEW AND APPROVAL PRIOR TO THE INSTALLATION OR PURCHASING OF ANY PIPING AND/OR EQUIPMENT.
22. ALL WATER PIPING INSTALLED IN EXTERIOR WALLS SHALL BE PLACED ON THE INTERIOR SIDE OF THE WALL, SO THAT WALL INSULATION CAN BE PLACED ON THE EXTERIOR SIDE OF THE PIPING.
23. IT IS THE PLUMBING CONTRACTORS RESPONSIBILITY TO PROVIDE A REDUCED PRESSURE BACKFLOW PREVENTION DEVICE ON THE MAIN DOMESTIC WATER SERVICE PROVIDED TO THE BUILDING/SPACE UNDER CONSTRUCTION AS PER THE LATEST ADOPTED VERSION OF THE PLUMBING CODE.
24. ALL PLUMBING SYSTEMS SHALL BE INSTALLED AS CLOSE AS POSSIBLE TO THE PERMITTED PLUMBING PLANS. ANY DEVIATION IN DESIGN AND ROUTING SHALL BE SUBMITTED TO THE ENGINEER FOR APPROVAL PRIOR TO INSTALLATION OF ANY WORK. THIS INCLUDES ANY REDESIGNS, VALUE ENGINEERING ITEMS AND ROUTING METHODS NEGOTIATED IN THE BIDDING PROCESS WITH THE GC IN ORDER TO OBTAIN THE LOWEST BID.
25. DOMESTIC WATER PIPING IS NOT PERMITTED BELOW THE BUILDING SLAB WITH THE EXCEPTION OF THE FEW FEET REQUIRED TO ENTER THE BUILDING CHASE WALL.
26. PLUMBING CONTRACTOR SHALL COMPLY WITH THE FBC CHAPTER 23 REGARDING STUD OPENINGS FOR ALL PIPE ROUTING, IN NO CASE SHALL MAX. OPENING FALL WITHIN 8" FROM EITHER SIDE OF STUD WITHOUT THE APPROVAL OF THE STRUCTURAL ENGINEER, IE: 3½" NON BEARING STUD, 2½" MAX. OPENING – 5½" NON-BEARING STUD, 4½" MAX. OPENING.
27. 3" PIPE NOT PERMITTED TO PENETRATE 3" STUDS WITHOUT ADITIONAL REINFORCEMENT AND APPROVAL FROM THE STRUCTURAL ENGINEER. 5½" STUDS ARE APPROVED FOR 2" & 3" PIPE UP TO 4½" MAX. OPENING WITHOUT ADDITIONAL REINFORCEMENT.
28. REFER TO ARCHITECTURAL PLANS FOR ALL RELATED DETAILS.

LAKE COUNTY BUILDING SERVICES
Any errors or omissions in these plans shall be made to conform with the applicable code requirements per Florida Building Code, in accordance with Section 107. Plans were reviewed for code compliance and shall be kept on job site.

RECEIVED FEB 14 2019

PERMIT REVIEW STAMP

ISSUE HISTORY

No.	Date	Description
1	02/08/2019	ISSUE FOR PERMIT

REVISION HISTORY

No.	Date	Description

© 2017 These documents and their contents are the property of FUGLEBERG KOCH, PLLC - LA26002103, and are issued only for the specific project noted on these drawings. Any reproductions, revisions, or modifications of these documents without the expressed written consent of Fugleberg Koch, PLLC is prohibited by law.

FUGLEBERG KOCH
2535 Temple Trail, Winter Park, FL 32789 (407) 629-0595
www.fuglebergkoch.com BR569

CONSULTANT

Joseph, Lawrence & Co
Consulting Engineers
1180 HARWOOD AVE. SUITE 3000
ALTAMONTE SPRINGS, FLORIDA 32714
TEL: 321.972.4466
WWW.JLCENG.COM
CA NO. 28730

JLC 17.0137.00

ADAM J. BARNEY LICENSE No. 69124 STATE OF FLORIDA PROFESSIONAL ENGINEER

Adam Joseph Barney
P.E. #:69124

SUMMER BAY APTS. II
LAKE COUNTY, FL

Drawn:	MJR/KCM
Checked:	BLS/AJB
Approved:	BLS/AJB
Date:	02/08/2019
Project #:	5389

SYMBOL LEGEND & NOTES PLUMBING

P0.01

GENERAL NOTES

1. PROVIDE CLEAN OUTS AS REQUIRED BY CODE AND AHJ. PROVIDE CLEAN OUTS AT THE BASE OF SANITARY STACKS & CONDENSATE DRAIN RISERS MINIMUM 24" ABOVE FLOOR.
2. SEE SHEETS P6.01 & P6.02 FOR RISER DIAGRAMS.

PLUMBING FIXTURE UNIT CALCULATION

* BASED ON 2017 FLORIDA BUILDING CODE – PLUMBING

TYPE OF SERVICE	WATER	SANITARY
FIXTURE UNIT COUNT TOTAL	444	531
TOTAL GALLONS PER MINUTE	113	N/A
SIZE OF SERVICE CONNECTION	3"	6"

REFERENCE NOTES: ⓧ

1. TERMINATE TPV PIPING ABOVE GRADE AT EXTERIOR OF BUILDING, SEE DETAIL 2/P5.02.
2. TERMINATE CONDENSATE ABOVE GRADE AT EXTERIOR OF BUILDING, SEE DETAIL 2/P5.02.
3. SUMP PUMP SP-1, SEE SCHEDULE ON SHEET P5.02 AND DETAIL 5/P5.01.
4. TERMINATE SUMP PUMP DISCHARGE ABOVE GROUND AT EXTERIOR OF BUILDING.
5. 1¼" WATER HEATER PAN DRAIN DOWN.
6. 1¼" CONDENSATE DRAIN DOWN.
7. 1¼" CW UP.
8. 4" SAN. DOWN.
9. ¾" CONDENSATE DRAIN CONNECTION TO A/C UNIT. ¾" CONDENSATE DOWN.
10. A/C UNIT, SEE MECHANICAL DRAWINGS SHEET M3.01.
11. 1" CONDENSATE DRAIN DOWN FROM FLOOR ABOVE.

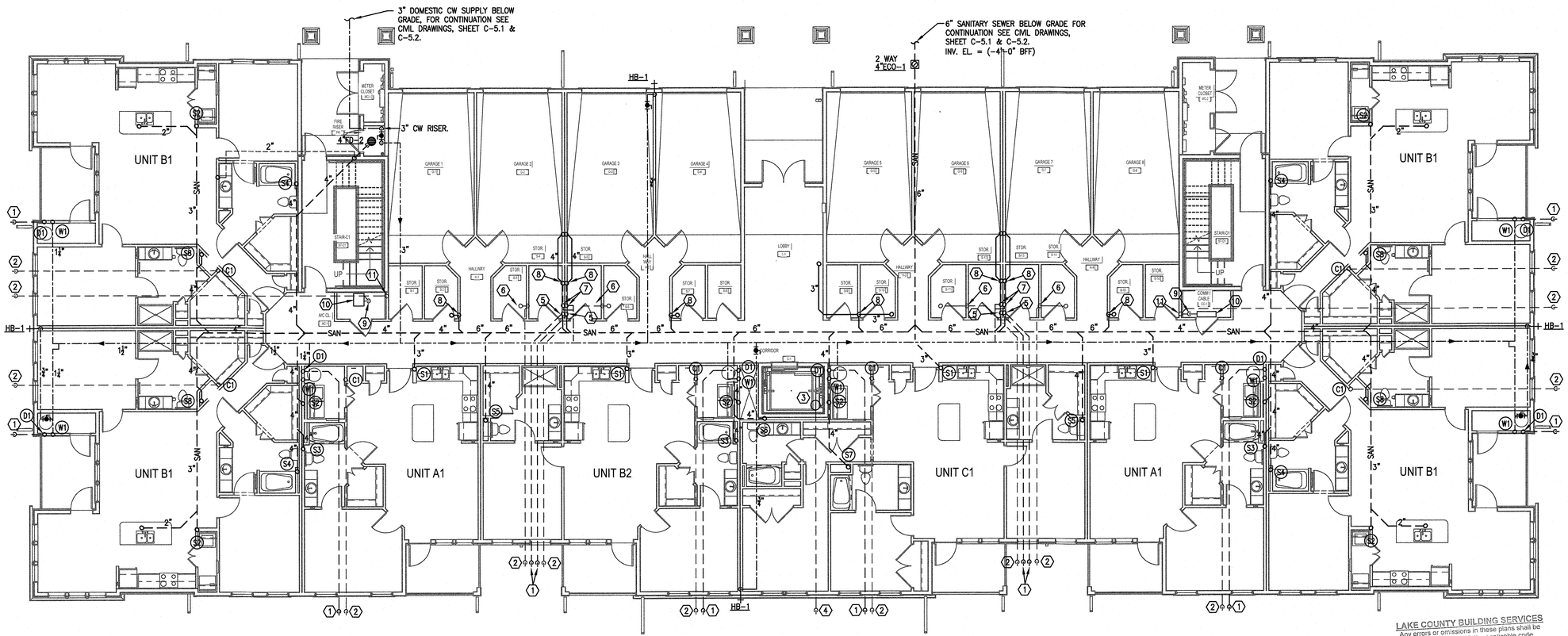

H1 BUILDING TYPE 2 - GROUND LEVEL - PLUMBING
1/8" = 1'-0"

LAKE COUNTY BUILDING SERVICES
Any errors or omissions in these plans shall be made to conform with the applicable code requirements per Florida Building Code, in accordance with Section 107. Plans were reviewed for code compliance and shall be kept on job site.

RECEIVED FEB 14 2019

PERMIT REVIEW STAMP

ISSUE HISTORY

No.	Date	Description
1	02/08/2019	ISSUE FOR PERMIT

REVISION HISTORY

No.	Date	Description

FUGLEBERG KOCH
2555 Temple Trail, Winter Park, FL 32789 (407) 629-0595
www.fuglebergkoch.com BR569

CONSULTANT
Joseph, Lawrence & Co
Consulting Engineers
1180 HARWOOD AVE. SUITE 3000
ALTAMONTE SPRINGS, FLORIDA 32714
TEL: 321.972.4466
WWW.JLCENG.COM
CA NO. 28730

JLC 17.0137.00

ADAM J BARNEY LICENSE No. 69124 STATE OF FLORIDA PROFESSIONAL ENGINEER

Adam Joseph Barney
P.E. #:69124

SUMMER BAY APTS. II
LAKE COUNTY, FL

Drawn:	MJR/KCM
Checked:	BLS/AJB
Approval:	BLS/AJB
Date:	02/08/2019
Project #:	5389

BUILDING TYPE 2 - GROUND FLOOR PLAN - PLUMBING

P3.01

© 2015 These documents and their contents are the property of FUGLEBERG KOCH, PLLC - AA26002103, and are issued only for the specific project noted on these drawings. Any reproductions, revisions, or modifications of these documents without the expressed written consent of Fugleberg Koch, PLLC is prohibited by law.

REFERENCE NOTES: ⓧ

1. 1" CONDENSATE DRAIN DOWN.
2. ¾" CONDENSATE DRAIN CONNECTION TO A/C UNIT.
3. A/C UNIT, SEE MECHANICAL DRAWINGS SHEET M3.02.

GENERAL NOTES

1. SEE SHEETS P6.01 AND P6.02 FOR RISER DIAGRAMS.

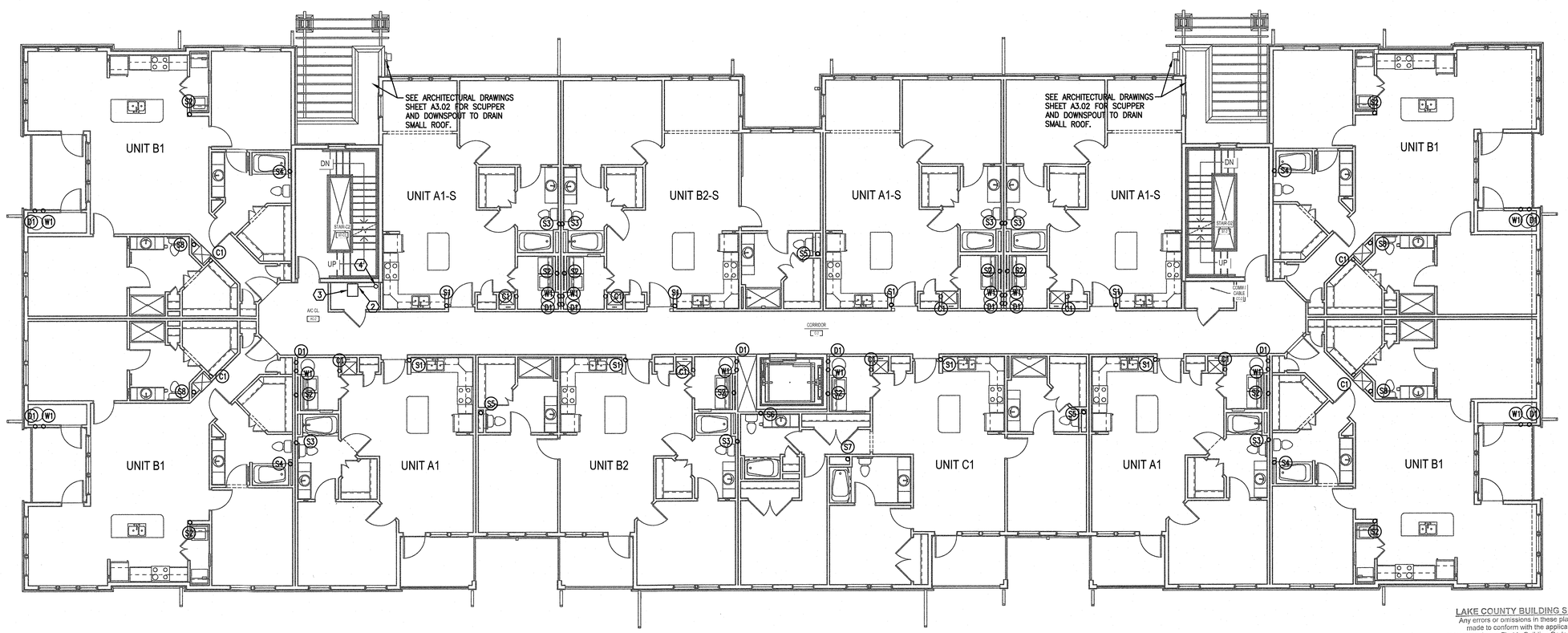

H1 BUILDING TYPE 2 - LEVEL 2 - PLUMBING
1/8" = 1'-0"

LAKE COUNTY BUILDING SERVICES
Any errors or omissions in these plans shall be made to conform with the applicable code requirements per Florida Building Code, in accordance with Section 107. Plans were reviewed for code compliance and shall be kept on job site.

RECEIVED FEB 14 2019

PERMIT REVIEW STAMP

ISSUE HISTORY

No.	Date	Description
1	02/08/2019	ISSUE FOR PERMIT

REVISION HISTORY

No.	Date	Description

© 2015 These documents and their contents are the property of FUGLEBERG KOCH, PLLC - AA26002103, and are issued only for the specific project noted on these drawings. Any reproductions, revisions, or modifications of these documents without the expressed written consent of Fugleberg Koch, PLLC is prohibited by law.

FUGLEBERG KOCH
2555 Temple Trail, Winter Park, FL 32789 (407) 629-0595
www.fuglebergkoch.com BR569

CONSULTANT
Joseph, Lawrence & Co
Consulting Engineers
1180 HARWOOD AVE. SUITE 3000
ALTAMONTE SPRINGS, FLORIDA 32714
TEL: 321.972.4466
WWW.JLCENG.COM
CA NO. 28730

JLC 17.0137.00

ADAM J. BARNEY
LICENSE
No. 69124
STATE OF FLORIDA
PROFESSIONAL ENGINEER

Adam Joseph Barney
P.E. #:69124

SUMMER BAY APTS. II
LAKE COUNTY, FL

Drawn:	MJR/KCM
Checked:	BLS/AJB
Approval:	BLS/AJB
Date:	02/08/2019
Project #:	5389

BUILDING TYPE 2 - LEVEL 2 PLAN - PLUMBING

P3.02

REFERENCE NOTES: ⟨X⟩

1. 1" CONDENSATE DRAIN DOWN.
2. ¾" CONDENSATE DRAIN CONNECTION TO A/C UNIT.
3. A/C UNIT, SEE MECHANICAL DRAWINGS SHEET M3.03.

GENERAL NOTES

1. SEE SHEETS P6.01 AND P6.02 FOR RISER DIAGRAMS.

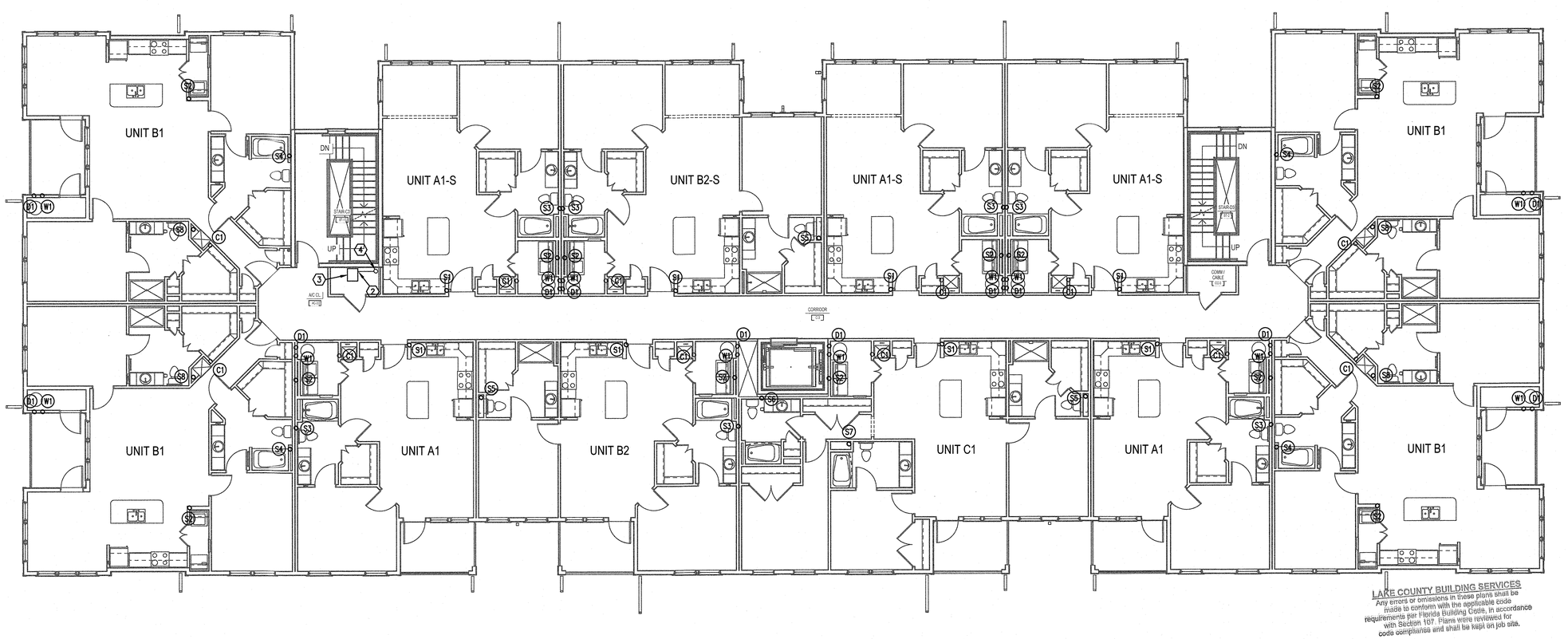

H1 BUILDING TYPE 2 - LEVEL 3 - PLUMBING
1/8" = 1'-0"

LAKE COUNTY BUILDING SERVICES
Any errors or omissions in these plans shall be made to conform with the applicable code requirements per Florida Building Code, in accordance with Section 107. Plans were reviewed for code compliance and shall be kept on job site.

RECEIVED FEB 14 2019

PERMIT REVIEW STAMP

ISSUE HISTORY

No.	Date	Description
1	02/08/2019	ISSUE FOR PERMIT

REVISION HISTORY

No.	Date	Description

FUGLEBERG KOCH
2555 Temple Trail, Winter Park, FL 32789 (407) 629-0595
www.fuglebergkoch.com BR569

CONSULTANT
Joseph, Lawrence & Co
Consulting Engineers
1180 HARWOOD AVE. SUITE 3000
ALTAMONTE SPRINGS, FLORIDA 32714
TEL: 321.972.4466
WWW.JLCENG.COM
CA NO. 28730

JLC 17.0137.00

ADAM J BARNEY
LICENSE
No. 69124
STATE OF FLORIDA
PROFESSIONAL ENGINEER

Adam Joseph Barney
P.E. #:69124

SUMMER BAY APTS. II
LAKE COUNTY, FL

Drawn:	MJR/KCM
Checked:	BLS/AJB
Approval:	BLS/AJB
Date:	02/08/2019
Project #:	5389

BUILDING TYPE 2 - LEVEL 3
PLAN - PLUMBING

P3.03

© 2015 These documents and their contents are the property of FUGLEBERG KOCH, PLLC - A-26002103, and are issued only for the specific project noted on these drawings. Any reproductions, revisions, or modifications of these documents without the expressed written consent of Fugleberg Koch, PLLC is prohibited by law.

REFERENCE NOTES: ⟨X⟩

⟨1⟩ ¾" CONDENSATE DRAIN DOWN.

⟨2⟩ ¾" CONDENSATE DRAIN CONNECTION TO A/C UNIT.

⟨3⟩ A/C UNIT, SEE MECHANICAL DRAWINGS SHEET M3.04.

GENERAL NOTES

1. SEE SHEETS P6.01 AND P6.02 FOR RISER DIAGRAMS.

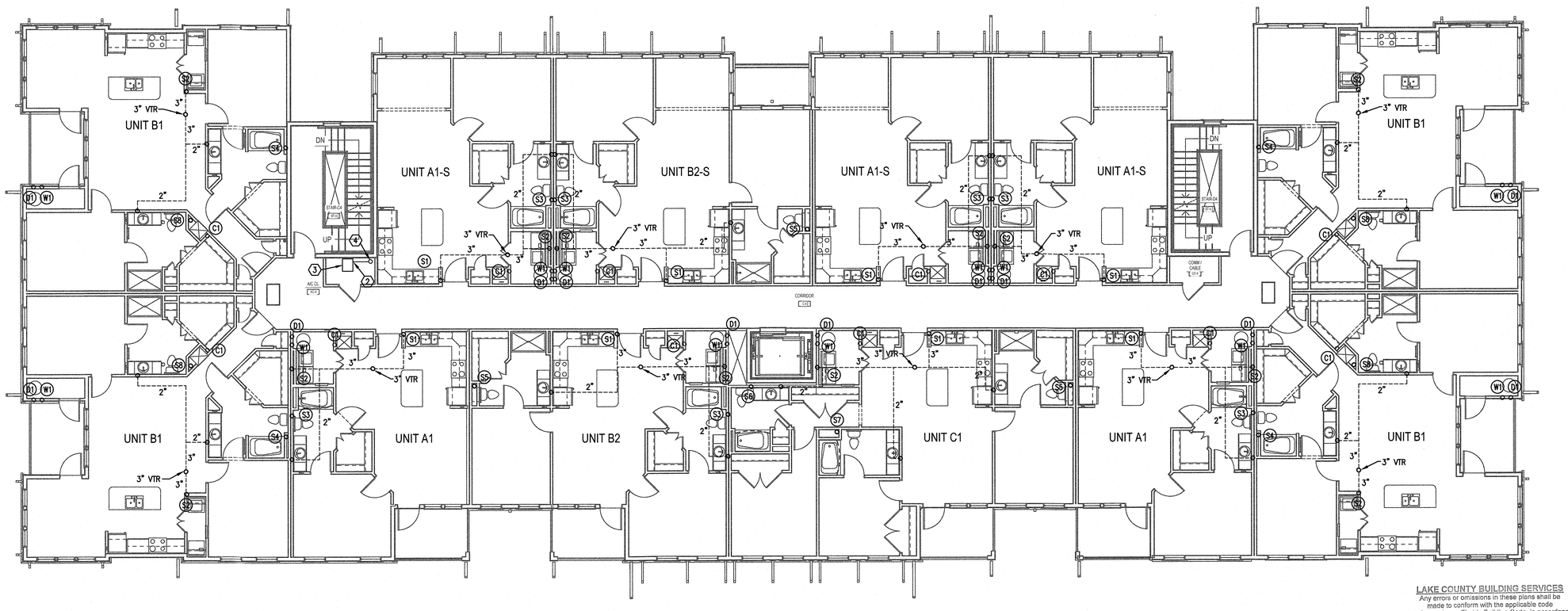

H1 BUILDING TYPE 2 - LEVEL 4 - PLUMBING
1/8" = 1'-0"

LAKE COUNTY BUILDING SERVICES
Any errors or omissions in these plans shall be made to conform with the applicable code requirements per Florida Building Code, in accordance with Section 107. Plans were reviewed for code compliance and shall be kept on job site.

RECEIVED FEB 14 2019

PERMIT REVIEW STAMP

ISSUE HISTORY

No.	Date	Description
1	02/08/2019	ISSUE FOR PERMIT

REVISION HISTORY

No.	Date	Description

FUGLEBERG KOCH
2555 Temple Trail, Winter Park, FL 32789 (407) 629-0595
www.fuglebergkoch.com BR569

CONSULTANT

Joseph, Lawrence & Co
Consulting Engineers
1180 HARWOOD AVE. SUITE 3000
ALTAMONTE SPRINGS, FLORIDA 32714
TEL: 321.972.4466
WWW.JLCENG.COM
CA NO. 28730

JLC 17.0137.00
ADAM J BARNEY — LICENSE — No. 69124 — State of Florida — PROFESSIONAL ENGINEER
Adam Joseph Barney
P.E. #:69124

Drawn:	MJR/KCM
Checked:	BLS/AJB
Approval:	BLS/AJB
Date:	02/08/2019
Project #:	5389

SUMMER BAY APTS. II
LAKE COUNTY, FL

BUILDING TYPE 2 - LEVEL 4 PLAN - PLUMBING

P3.04

© 2019 These documents and the contents are the property of FUGLEBERG KOCH, PLLC - LA26000125, and are issued only for the specific project noted on these drawings. Any reproductions, revisions, or modifications of these documents without the expressed written consent of Fugleberg Koch, PLLC is prohibited by law.

REFERENCE NOTES: ⓧ

ⓧ 1 FLAT ROOFS DRAIN TO SCUPPERS, NO INTERNAL ROOF DRAINS. SEE ARCH. DWGS. SHEET A2.13 FOR ROOF INFORMATION.

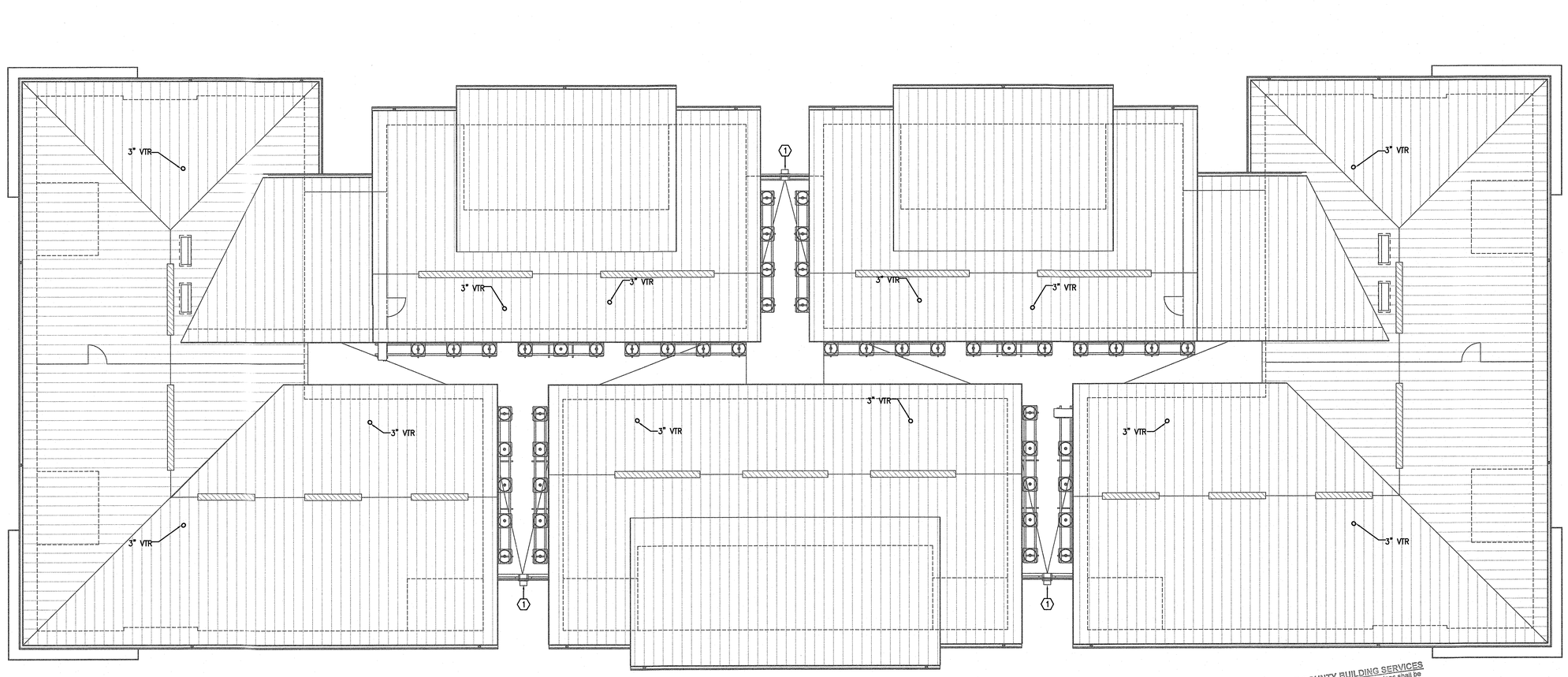

H1 BUILDING TYPE 2 - ROOF - PLUMBING
1/8" = 1'-0"

LAKE COUNTY BUILDING SERVICES
Any errors or omissions in these plans shall be made to conform with the applicable code requirements per Florida Building Code, in accordance with Section 107. Plans were reviewed for code compliance and shall be kept on job site.

RECEIVED FEB 14 2019

PERMIT REVIEW STAMP

ISSUE HISTORY

No.	Date	Description
1	02/08/2019	ISSUE FOR PERMIT

REVISION HISTORY

No.	Date	Description

© 2015 These documents and their contents are the property of FUGLEBERG KOCH, P.L.C. - AA26001015, and are issued only for the specific project noted on these drawings. Any reproductions, revisions, or modifications of these documents without the expressed written consent of Fugleberg Koch, P.L.C is prohibited by law.

FUGLEBERG KOCH
2555 Temple Trail, Winter Park, FL 32789 (407) 629-0595
www.fuglebergkoch.com BR569

CONSULTANT
Joseph, Lawrence & Co
Consulting Engineers
1180 HARWOOD AVE. SUITE 3000
ALTAMONTE SPRINGS, FLORIDA 32714
TEL: 321.972.4466
WWW.JLCENG.COM
CA NO. 28730

JLC 17 0137 00
ADAM J. BARNEY
LICENSE
No. 69124
STATE OF FLORIDA
PROFESSIONAL ENGINEER
Adam Joseph Barney
P.E. #:69124

Drawn:	MJR/KCM
Checked:	BLS/AJB
Approval:	BLS/AJB
Date:	02/08/2019
Project #:	5389

SUMMER BAY APTS. II
LAKE COUNTY, FL

BUILDING TYPE 2 - ROOF - PLUMBING

P3.05

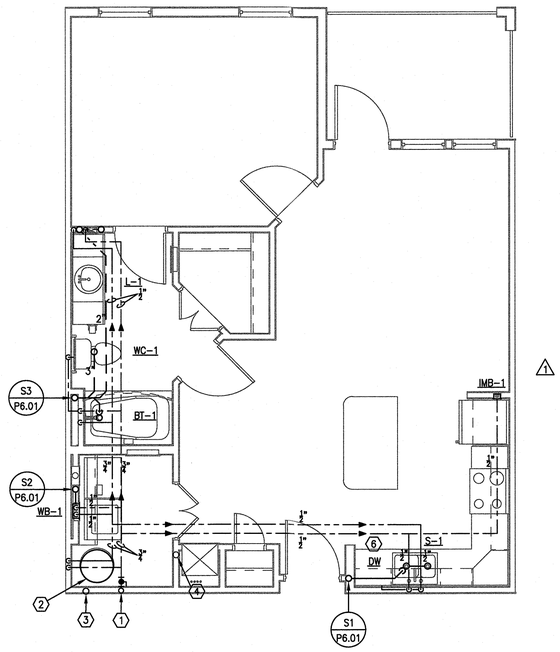

D1 ENLARGED TYPICAL UNIT TYPE 'A1' - PLUMBING
1/4" = 1'-0"

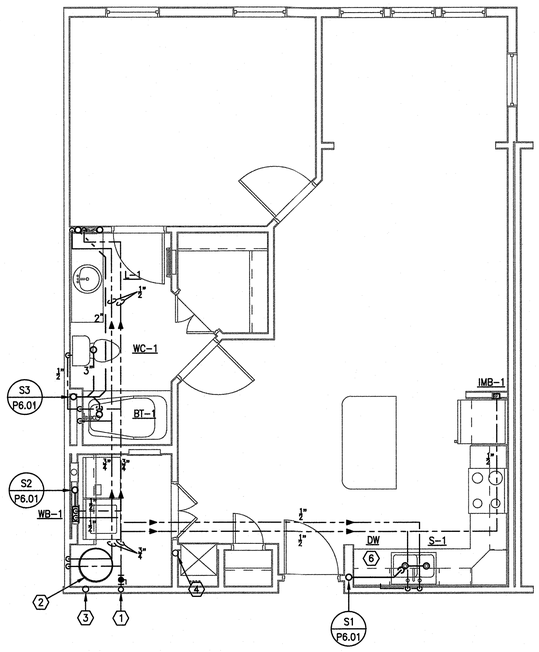

H1 ENLARGED TYPICAL UNIT TYPE 'A1S' - PLUMBING
1/4" = 1'-0"

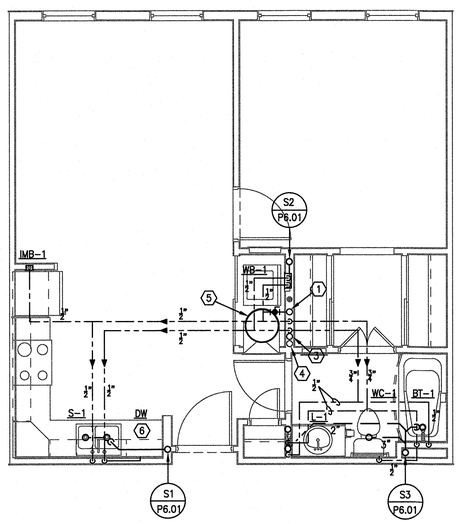

H5 ENLARGED TYPICAL UNIT TYPE 'S1' - PLUMBING
1/4" = 1'-0"

REFERENCE NOTES: ⓧ

1. COLD WATER RISER WITH UNIT SHUT-OFF VALVE & REMOTE READ SUB-METER. CONTRACTOR TO INSTALL SUB-METER FURNISHED BY OWNER. SEE BUILDING PLAN FOR RISER TAG.
2. ELECTRIC WATER HEATER EWH-1 SEE SCHEDULE ON SHEET P5.01 & DETAIL 5/P5.01.
3. TPV & PAN DRAIN RISER, SEE RISER DIAGRAM ON SHEET P6.02.
4. CONDENSATE STACK, SEE RISER DIAGRAM ON SHEET P6.02 FOR PIPE SIZES.
5. ELECTRIC WATER HEATER EWH-2 SEE SCHEDULE ON SHEET P5.01 & DETAIL 5/P5.01.
6. ¾" HW TO DISHWASHER. CONNECT DISHWASHER DRAIN TO DISPOSER.

LAKE COUNTY BUILDING SERVICES
Any errors or omissions in these plans shall be made to conform with the applicable code requirements per Florida Building Code, in accordance with Section 107. Plans were reviewed for code compliance and shall be kept on job site.

RECEIVED FEB 14 2019

PERMIT REVIEW STAMP

ISSUE HISTORY

No.	Date	Description
1	02/08/2019	ISSUE FOR PERMIT

REVISION HISTORY

No.	Date	Description
1	12/18/2018	PERMIT REVIEW RESPONSE

© 2019 These documents and their contents are the property of FUGLEBERG KOCH, PLLC. FUGLEBERG KOCH, PLLC is prohibited by law. Any reproductions, revisions, or modifications of these documents without the expressed written consent of Fugleberg Koch, PLLC is prohibited by law.

FUGLEBERG KOCH
2555 Temple Trail, Winter Park, FL 32789 (407) 629-0595
www. fuglebergkoch.com BR569

CONSULTANT
Joseph, Lawrence & Co
Consulting Engineers
1180 HARWOOD AVE, SUITE 3000
ALTAMONTE SPRINGS, FLORIDA 32714
TEL: 321.972.4466
WWW.JLCENG.COM
CA NO. 28730

JLC 17.0137.00
ADAM J. BARNEY LICENSE No. 69124 STATE OF FLORIDA PROFESSIONAL ENGINEER
Adam Joseph Barney
P.E. #:69124

SUMMER BAY APTS. II
LAKE COUNTY, FL

Drawn:	MJR/KCM
Checked:	BLS/AJB
Approved:	BLS/AJB
Date:	02/08/2019
Project #:	5389

ENLARGED TYPICAL UNIT PLANS - PLUMBING

P4.01

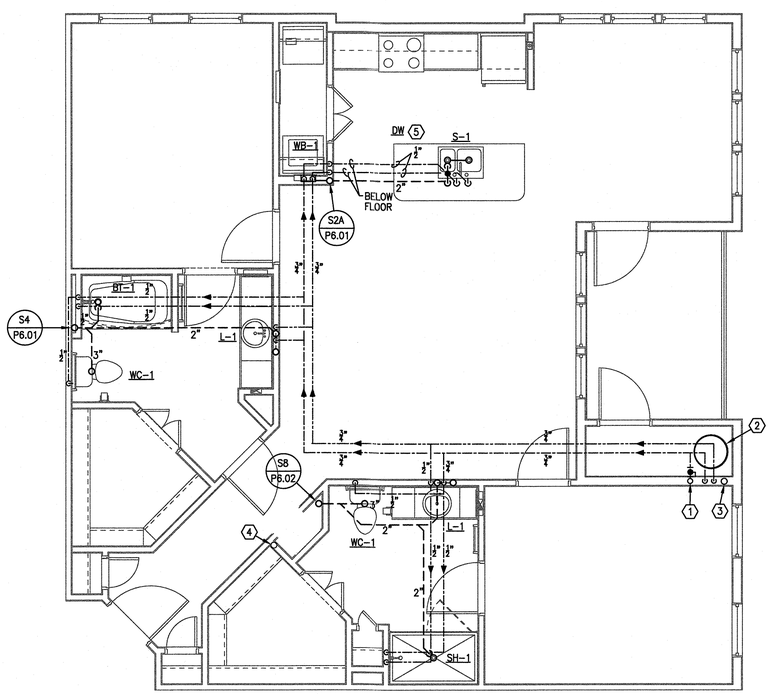

D1 ENLARGED TYPICAL UNIT TYPE 'B1' - PLUMBING
1/4" = 1'-0"

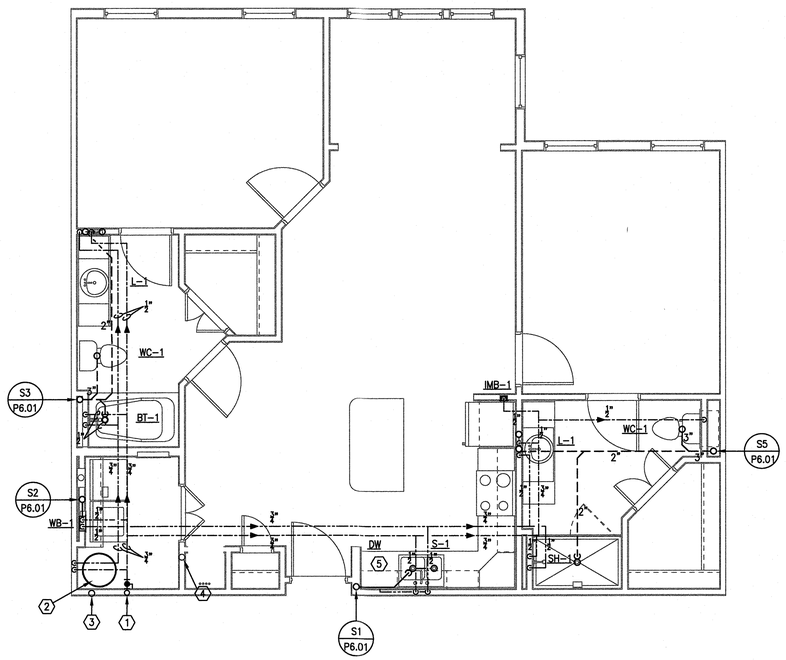

H1 ENLARGED TYPICAL UNIT TYPE 'B2S' - PLUMBING
1/4" = 1'-0"

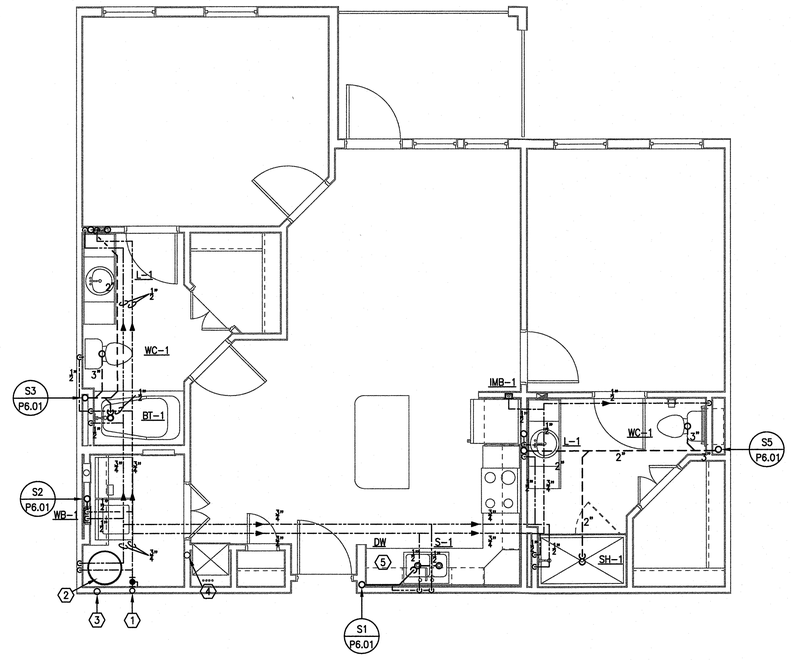

H5 ENLARGED TYPICAL UNIT TYPE 'B2' - PLUMBING
1/4" = 1'-0"

REFERENCE NOTES: ⓧ

1. COLD WATER RISER WITH UNIT SHUT-OFF VALVE & REMOTE READ SUB-METER. CONTRACTOR TO INSTALL SUB-METER FURNISHED BY OWNER. SEE BUILDING PLAN FOR RISER TAG.
2. ELECTRIC WATER HEATER EWH-1 SEE SCHEDULE ON SHEET P5.01 & DETAIL 5/P5.01.
3. TPV & PAN DRAIN RISER, SEE RISER DIAGRAM ON SHEET P6.02.
4. CONDENSATE STACK, SEE RISER DIAGRAM ON SHEET P6.02 FOR PIPE SIZES.
5. ½" HW TO DISHWASHER. CONNECT DISHWASHER DRAIN TO DISPOSER.

LAKE COUNTY BUILDING SERVICES
Any errors or omissions in these plans shall be made to conform with the applicable code requirements per Florida Building Code, in accordance with Section 107. Plans were reviewed for code compliance and shall be kept on job site.

RECEIVED FEB 14 2019

PERMIT REVIEW STAMP

ISSUE HISTORY

No.	Date	Description
1	02/08/2019	ISSUE FOR PERMIT

REVISION HISTORY

No.	Date	Description

© 2015 These documents and their contents are the property of FUGLEBERG KOCH, PLLC - AA26002103, and are issued only for the specific project noted on these drawings. Any reproductions, revisions, or modifications of these documents without the expressed written consent of Fugleberg Koch, PLLC is prohibited by law.

FUGLEBERG KOCH
2555 Temple Trail, Winter Park, FL 32789 (407) 629-0595
www.fuglebergkoch.com BR569

CONSULTANT
Joseph, Lawrence & Co
Consulting Engineers
1180 HARWOOD AVE. SUITE 3000
ALTAMONTE SPRINGS, FLORIDA 32714
TEL: 321.972.4466
WWW.JLCENG.COM
CA NO. 28730

JLC 17.0137.00

ADAM J. BARNEY
LICENSE
No. 69124
STATE OF FLORIDA
PROFESSIONAL ENGINEER

Adam Joseph Barney
P.E. #:69124

SUMMER BAY APTS. II
LAKE COUNTY, FL

Drawn:	MJR/KCM
Checked:	BLS/AJB
Approval:	BLS/AJB
Date:	02/08/2019
Project #:	5389

ENLARGED TYPICAL UNIT PLANS - PLUMBING

P4.02

REFERENCE NOTES: ⓧ

1. COLD WATER RISER WITH UNIT SHUT-OFF VALVE & REMOTE READ SUB-METER. CONTRACTOR TO INSTALL SUB-METER FURNISHED BY OWNER. SEE BUILDING PLAN FOR RISER TAG.
2. ELECTRIC WATER HEATER EWH-3 SEE SCHEDULE ON SHEET P5.01 & DETAIL 5/P5.01.
3. TPV & PAN DRAIN RISER, SEE RISER DIAGRAM ON SHEET P6.02.
4. CONDENSATE STACK, SEE RISER DIAGRAM ON SHEET P6.02 FOR PIPE SIZES.
5. 1" HW TO DISHWASHER. CONNECT DISHWASHER DRAIN TO DISPOSER.

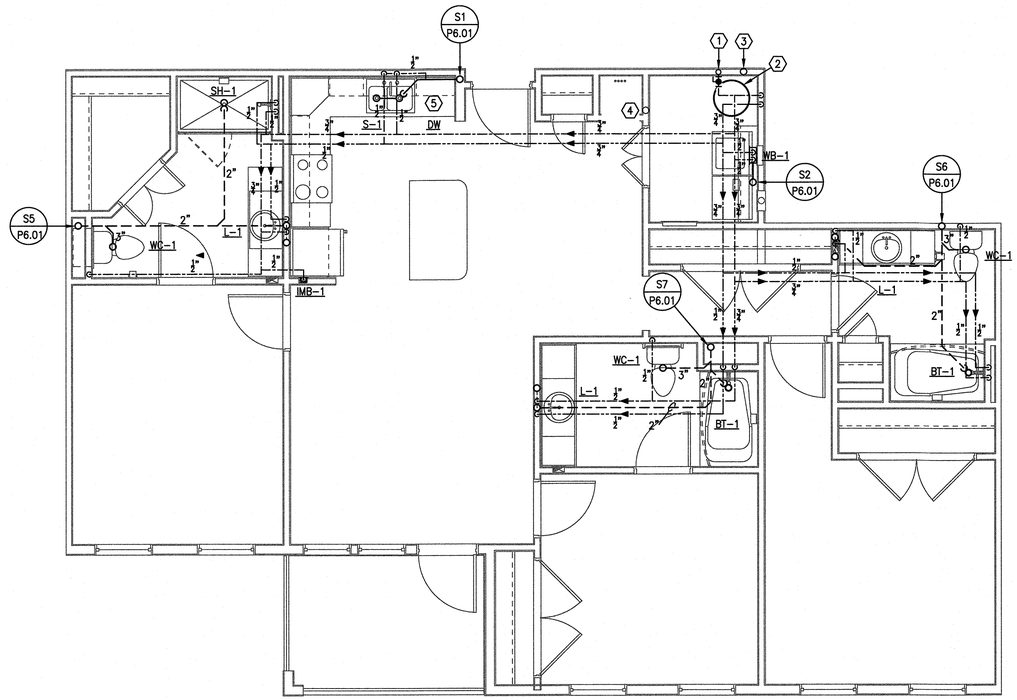

F4 ENLARGED TYPICAL UNIT TYPE 'C1' - PLUMBING
1/4" = 1'-0"

LAKE COUNTY BUILDING SERVICES
Any errors or omissions in these plans shall be made to conform with the applicable code requirements per Florida Building Code, in accordance with Section 107. Plans were reviewed for code compliance and shall be kept on job site.

RECEIVED FEB 14 2019

PERMIT REVIEW STAMP

ISSUE HISTORY

No.	Date	Description
1	02/08/2019	ISSUE FOR PERMIT

REVISION HISTORY

No.	Date	Description

© 2015 These documents and their contents are the property of FUGLEBERG KOCH, PLLC - LA0002105, and are issued only for the specific project noted on these drawings. Any reproductions, revisions, or modifications of these documents without the expressed written consent of Fugleberg Koch, PLLC is prohibited by law.

FUGLEBERG KOCH
2555 Temple Trail, Winter Park, FL 32789 (407) 629-0595
www. fuglebergkoch.com BR369

CONSULTANT
Joseph, Lawrence & Co
Consulting Engineers
1180 HAB'WOOD AVE. SUITE 3000
ALTAMONTE SPRINGS, FLORIDA 32714
TEL: 321.972.4466
WWW.JLCENG.COM
CA NO. 28730

JLC 17-0137.00

ADAM J BARNEY
LICENSED
No. 69124
STATE OF FLORIDA
PROFESSIONAL ENGINEER

Adam J. Barney
P.E. #:69124

Drawn:	MJR/KCM
Checked:	BLS/AJB
Approval:	BLS/AJB
Date:	02/08/2019
Project #:	5389

SUMMER BAY APTS. II
LAKE COUNTY, FL

ENLARGED TYPICAL UNIT PLANS - PLUMBING

P4.03

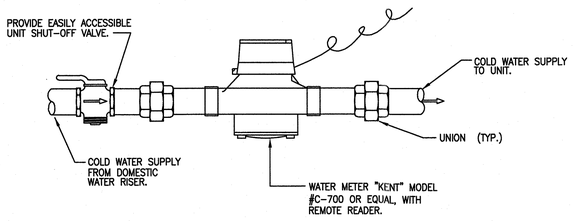

1 NTS — WATER METER DETAIL

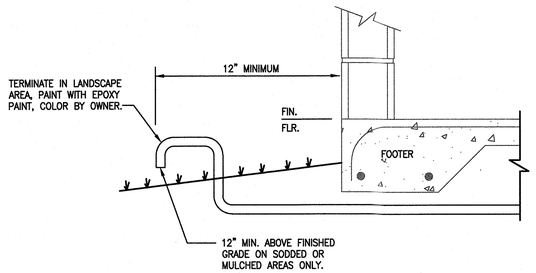

2 NTS — CONDENSATE & WATER HEATER SAFETY PAN DISCHARGE TERMINATION DETAIL

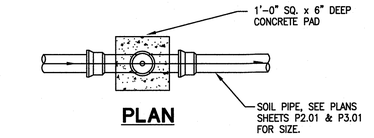

PLAN

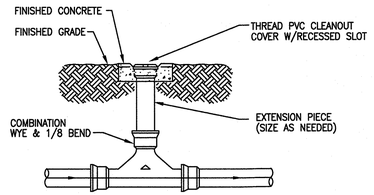

ELEVATION

3 NTS — TWO WAY CLEAN OUT DETAIL

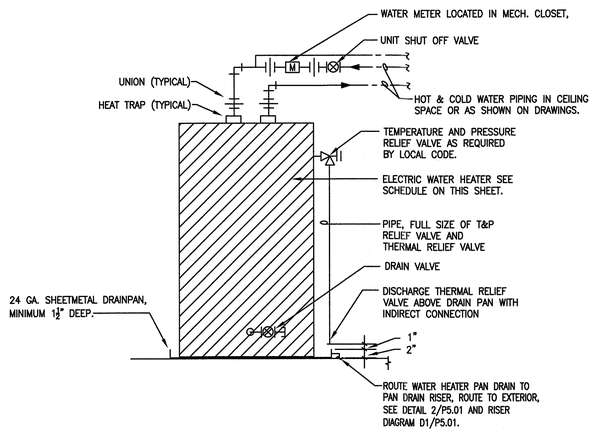

4 NTS — WATER HEATER DETAIL

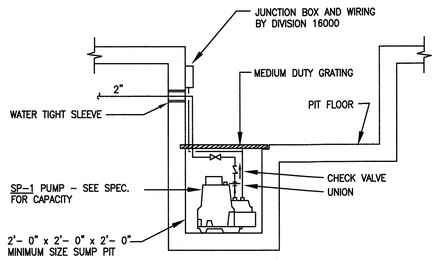

PROVIDE ALARM PANEL WITH AUDIBLE AND LIGHT ALARMS TO ACTIVATE UPON OPERATION OF PUMP. COORDINATE ALARM PANEL LOCATION WITH OWNER PRIOR TO INSTALLATION. COORDINATE ELECTRICAL WORK REQUIRED.

5 NTS — SUMP PUMP DETAIL

PLUMBING FIXTURE SCHEDULE (OR EQUAL)

MARK	FIXTURE	WASTE	TRAP	VENT	COLD WATER	HOT WATER	MANUFACTURER /MODEL #	DESCRIPTION
WC-1	WATER CLOSET	3"	INTEG	2"	1/2"	–	WESTERN POTTERY #8251	"BOLINA" FLOOR MOUNTED TANK TYPE, 1.28 GALLONS PER FLUSH, HIGH EFFICIENCY LOW WATER CONSUMPTION, WHITE VITREOUS CHINA, ELONGATED, PROVIDE ANGLE STOP, SUPPLY TUBE & ESCUTCHEONS. SOLID PLASTIC, CLOSED FRONT, SEAT WITH COVER.
L-1	LAVATORY	1-1/2"	1-1/4"	1-1/2"	1/2"	1/2"	SEASONS SE10002 ASPEN #411844	OVAL, VITREOUS CHINA, 20"X17", SELF RIMMING WITH FRONT OVERFLOW. 'BRADSHIRE' CENTERSET SINGLE CONTROL LAVATORY CHROME PLATED FAUCET & POP UP WASTE. PROVIDE BRASSCRAFT ANGLE STOP SUPPLIES W/SUPPLY TUBES AND ESCUTCHEONS, 1.2 GPM.
S-1	SINK	2"	1-1/2"	1-1/2"	1/2"	1/2"	ELKAY LR3321PD ESSEN #120098 BRASS CRAFT #CR1912DL	STAINLESS STEEL DOUBLE BOWL TOP MOUNT SINK, SELF RIMMING, 18 GAUGE S.S. OVERALL SIZE: 33" x 24-¼" x 7-¾". SINGLE HANDLE KITCHEN FAUCET, 1.5 GPM, BRUSHED NICKEL FINISH, WITH SPRAY. PROVIDE ANGLE STOPS. SUPPLY TUBES & ESCUTCHEONS. ROUGH BRASS STOPS, PLASTIC ESCUTCHEONS, SUPPLIES, TRAPS, & DISPOSAL WASTE. PROVIDE LEVER HANDLE FAUCETS. GARBAGE DISPOSAL: INSINKERATOR BADGER 5XP, GALVANIZED STEEL, 3/4 H.P., 120V-1PH, QUIET DURADRIVE INDUCTION MOTOR.
DW	DISHWASHER	5/8"	–	–	–	1/2"	BY OTHERS	REFER TO ARCHITECTURAL DRAWINGS FOR SELECTION.
BT-1	BATHTUB	1-1/2"	1-1/2"	1-1/2"	1/2"	1/2"	AQUATIC 6036CTM	5'-0" x 3'-0" COMPOSITE TUB WITH SLIP RESISTANT FLOOR. DELTA T13420 PRESSURE BALANCING MIXING VALVE, ESCUTCHEON, 2.0 GPM SHOWER HEAD, LEVER HANDLE, TUB FILLER.
SH-1	SHOWER	2"	2"	1-1/2"	1/2"	1/2"	KOHLER K-9055-0	5'-0" x 3'-0" COMPRESSION MOLDED COMPOSITE SHOWER PAN AND 3 PIECE MODULAR WALL SYSTEM. DELTA T13420 PRESSURE BALANCING MIXING VALVE, ESCUTCHEON, 2.0 GPM SHOWER HEAD, LEVER HANDLE, DIVERTER VALVE, TUB FILLER. ADJUSTABLE PVC FLOOR DRAIN WITH NICKEL CHROME PLATED STRAINER.
WCO-1	WALL CLEAN-OUT	SIZE/ SEE DWG.	–	–	–	–	ZURN Z1446 OR EQUAL	CAST IRON CLEAN-OUT TEE, DURA COATED BODY, GAS AND WATERTIGHT ABS TAPERED THREAD PLUG AND ROUND, SMOOTH STAINLESS STEEL WALL ACCESS COVER WITH SECURING SCREW.
ECO-1	EXTERIOR CLEAN-OUT	SIZE/ SEE DWG.	–	–	–	–	JOSAM 57000-31 OR EQUAL	PVC CLEAN-OUT WITH 2-WAY CLEAN-OUT TEE, COUNTER SUNK PLUG (MOUNTED IN FLUSH 12"x12"x4" CONCRETE PAD.)
TPV-1	TRAP PRIMER VALVE	–	–	–	1/2"	–	PRECISION PLUMBING PRODUCTS PR-500 OR EQUAL	PROVIDE FULLY ACCESSIBLE SHUT OFF VALVE TO EACH PRIMER VALVE.
WHA-1	WATER HAMMER ARRESTOR	–	–	–	–	–	SIOUX CHIEF #650 SERIES OR EQUAL	SIZE PER MANUFACTURER'S RECOMMENDATIONS. PDI CERTIFIED. WHA-1: SIZE "A" WHA-2: SIZE "B" REFER TO RISER DIAGRAMS FOR ARRESTOR LOCATIONS. REFER TO SPECIFICATION FOR SELECTION METHOD.
HB-1	HOSE BIBB	–	–	–	1/2"	–	WOODFORD #79 OR EQUAL	BRASS, CHROME PLATED, WALL MOUNTED FOR NON-FREEZING AREAS, 2-5/8" DEEP TO FIT IN STANDARD 2" x 4" FRAMED WALLS, VACUUM BREAKER, LOOSE KEY OPERATOR.
WB-1	WASHER BOX	2"	2"	–	1/2"	1/2"	OATEY #38933 OR EQUAL	VALVE 36"AFF. HIGH IMPACT PLASTIC BOX W/ DIMENSION OF 9" HIGH x 10 3/4" WIDE. PROVIDE 1/2" FIP INLET x 1/4" OD OUTLET COMPRESSION ANGLE VALVE. SUPPLY CONNECTION SIZE SHALL BE 1/2" OD.
IMB-1	ICE MAKER BOX	–	–	–	1/2"	–	OATEY #38486	¼" TURN BRASS BALL VALVE,COPPER SWEAT, 1 HOUR FIRE RATED
RD-1	ROOF DRAIN	SIZE/ SEE DWG.	–	–	–	–	ZURN ZC-121-C	12" DIAMETER ROOF DRAIN, DURA-COATED CAST IRON BODY WITH COMBINATION MEMBRANE FLASHING CLAMP/GRAVEL GUARD AND LOW SILHOUETTE GALVANIZED CAST IRON DOME, UNDERDECK CLAMP.

NOTES:
1. ALL PLUMBING FIXTURES SHALL BE SUPPLIED WITH WATTS "FLOODSAFE" AUTO-SHUT OFF CONNECTOR TYPE SUPPLY RISERS WITH BRAIDED STAINLESS STEEL CONNECTORS. THIS SHALL INCLUDE ALL FAUCETS, AND TOILETS.
2. PROVIDE FULLY ACCESSIBLE WATER HAMMER ARRESTORS ON ALL DISHWASHERS, ICE MAKER BOXES, AND WASHER BOX WATER SUPPLIES.

ELECTRIC WATER HEATER SCHEDULE

UNIT #	TYPE	GALLONS	INPUT KW	UEF RATING	GPH REC. @ 90°F RISE	VOLT/PHASE CURRENT DRAW (PER PHASE)	WEIGHT (LBS.)	DIMENSIONS	MANUFACTURER		REMARKS
									MANUFACTURER	MODEL #	
EWH-1	ELECTRIC	46	4.5	.93	21	208V – 1ø	508	60-¼" H x 20-½" ø	AO SMITH	ENT-50	
EWH-2	ELECTRIC	44	4.5	.93	21	208V – 1ø	540	34" H x 26-½" ø	AO SMITH	ENLB-50	
EWH-3	ELECTRIC	55	4.5	.95	21	208V – 1ø	604	56-¼" H x 24" ø	AO SMITH	ENT-55	

NOTES:
1. PROVIDE WITH EXPANSION VALVE, T & P VALVE AND WATER HEATER DRAIN PAN.
2. COORDINATE WATER HEATER LOCATION AND PIPING WITH MECHANICAL AND ELECTRICAL PLANS.

LAKE COUNTY BUILDING SERVICES
Any errors or omissions in these plans shall be made to conform with the applicable code requirements per Florida Building Code, in accordance with Section 107. Plans were reviewed for code compliance and shall be kept on job site.

PUMP SCHEDULE

UNIT #	DESCRIPTION	TYPE	GPM	FT HEAD	CONN. SIZE		MOTOR DATA				SELECTION BASED ON:		REMARKS
					INLET	OUTLET	HP	RPM	VOLT	PH.	MANUFACTURER	MODEL	
SP-1	ELEVATOR SUMP PUMP	SUBMERSIBLE PUMP	50	20	2"	2"	3/4	1750	120	1 PH	LIBERTY	ELV-600	--

RECEIVED FEB 14 2019

PERMIT REVIEW STAMP

ISSUE HISTORY

No.	Date	Description
1	02/08/2019	ISSUE FOR PERMIT

REVISION HISTORY

No.	Date	Description

© 2015 These documents are the property of FUGLEBERG KOCH, PLLC - 1435002100, and are issued only for the specific project noted on these drawings. Any reproductions, revisions, or modifications of these documents without the expressed written consent of Fugleberg Koch, PLLC is prohibited by law.

FUGLEBERG KOCH
2555 Temple Trail, Winter Park, FL 32789 (407) 629-0595
www.fuglebergkoch.com BR569

CONSULTANT
Joseph, Lawrence & Co Consulting Engineers
1180 HARWOOD AVE. SUITE 3000
ALTAMONTE SPRINGS, FLORIDA 32714
TEL: 321.972.4466
WWW.JLCENG.COM
CA NO. 28730

JLC 17.0137.00



Adam Joseph Barney
P.E. #:69124

SUMMER BAY APTS. II
LAKE COUNTY, FL

Drawn:	MJR/KCM
Checked:	BLS/AJB
Approval:	BLS/AJB
Date:	02/08/2019
Project #:	5389

SCHEDULES & DETAILS PLUMBING

P5.01

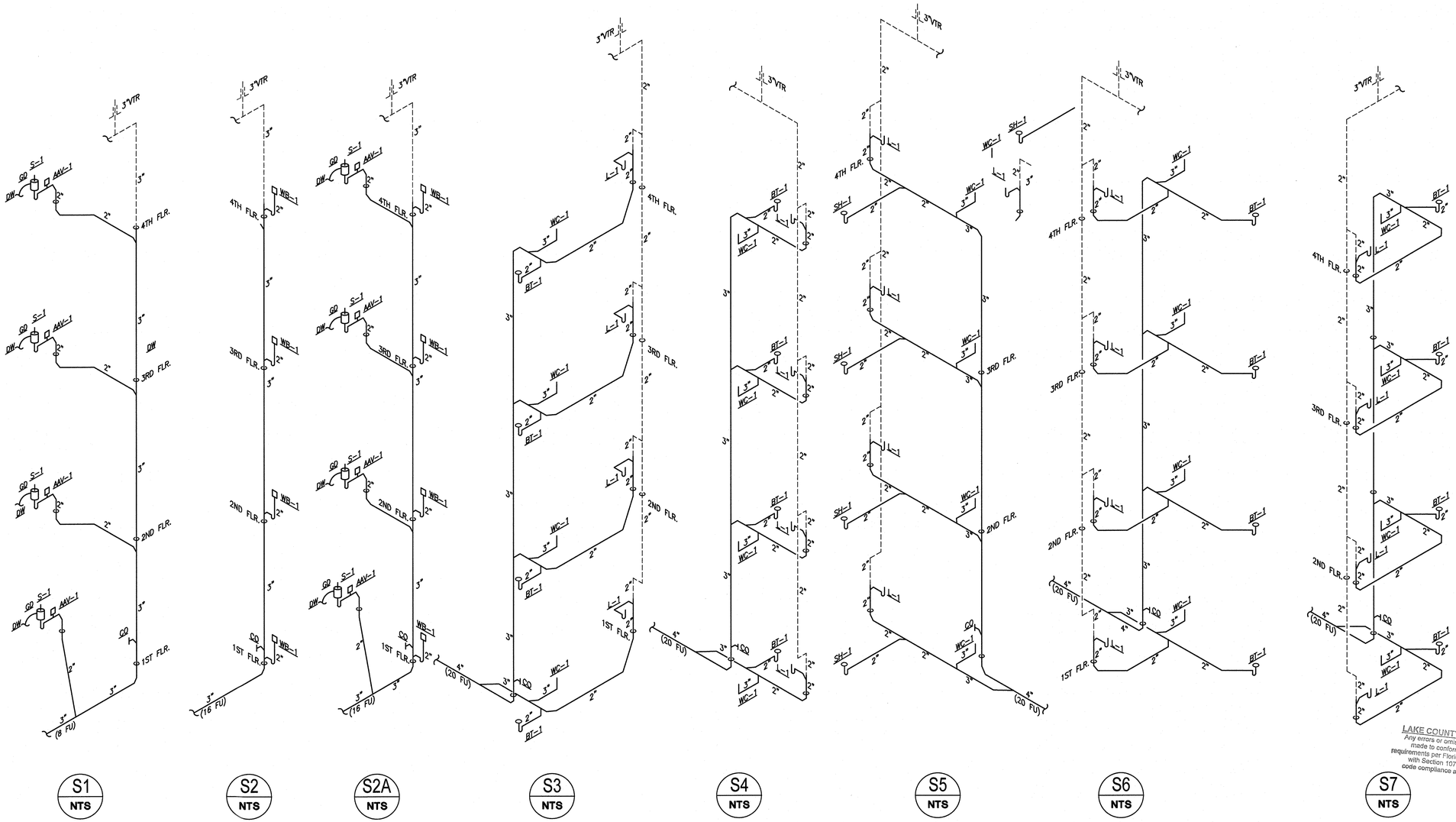

SANITARY RISER DIAGRAMS
NTS

LAKE COUNTY BUILDING SERVICES
Any errors or omissions in these plans shall be made to conform with the applicable code requirements per Florida Building Code, in accordance with Section 107. Plans were reviewed for code compliance and shall be kept on job site.

RECEIVED FEB 14 2019

PERMIT REVIEW STAMP

ISSUE HISTORY

No.	Date	Description
1	02/08/2019	ISSUE FOR PERMIT

REVISION HISTORY

No.	Date	Description

FUGLEBERG KOCH
2555 Temple Trail, Winter Park, FL 32789 (407) 629-0595
www.fuglebergkoch.com BR569

CONSULTANT
Joseph, Lawrence & Co
Consulting Engineers
1180 HARWOOD AVE. SUITE 3000
ALTAMONTE SPRINGS, FLORIDA 32714
TEL: 321.972.4466
WWW.JLCENG.COM
CA NO. 28730

JLC 17.0137.00

ADAM J BARNEY LICENSE No. 69124 STATE OF FLORIDA PROFESSIONAL ENGINEER

Adam Joseph Barney
P.E. #:69124

SUMMER BAY
APTS. II
LAKE COUNTY, FL

Drawn:	MJR/KCM
Checked:	BLS/AJB
Approval:	BLS/AJB
Date:	02/08/2019
Project #:	5389

RISER DIAGRAMS
PLUMBING

P6.01

© 2015 These documents and their contents are the property of FUGLEBERG KOCH, PLLC - AA26002103, and are issued only for the specific project noted on these drawings. Any reproductions, revisions, or modifications of these documents without the expressed written consent of Fugleberg Koch, PLLC is prohibited by law.

REFERENCE NOTES:

1. CONNECTION TO HVAC A/C UNIT BY MECHANICAL CONTRACTOR (TYPICAL).
2. CONDENSATE LINE DISCHARGE TO BUILDING EXTERIOR, TERMINATE ABOVE GRADE A MIN OF 1'-0" AWAY FROM BUILDING. REFER TO PLUMBING DETAIL 2/P5.01.
3. ¾" CW & HW TO UNIT. CONNECT TO PLUMBING FIXTURES WITHIN UNIT.
4. WATER HEATER, REFER TO WATER HEATER SCHEDULE ON SHEET P5.01 AND DETAIL 4/P5.01.
6. DRAIN PAN PIPING DISCHARGE TO BUILDING EXTERIOR, TERMINATE ABOVE GRADE A MIN OF 1'-0" AWAY FROM BUILDING. REFER TO PLUMBING DETAIL 2/P5.01.

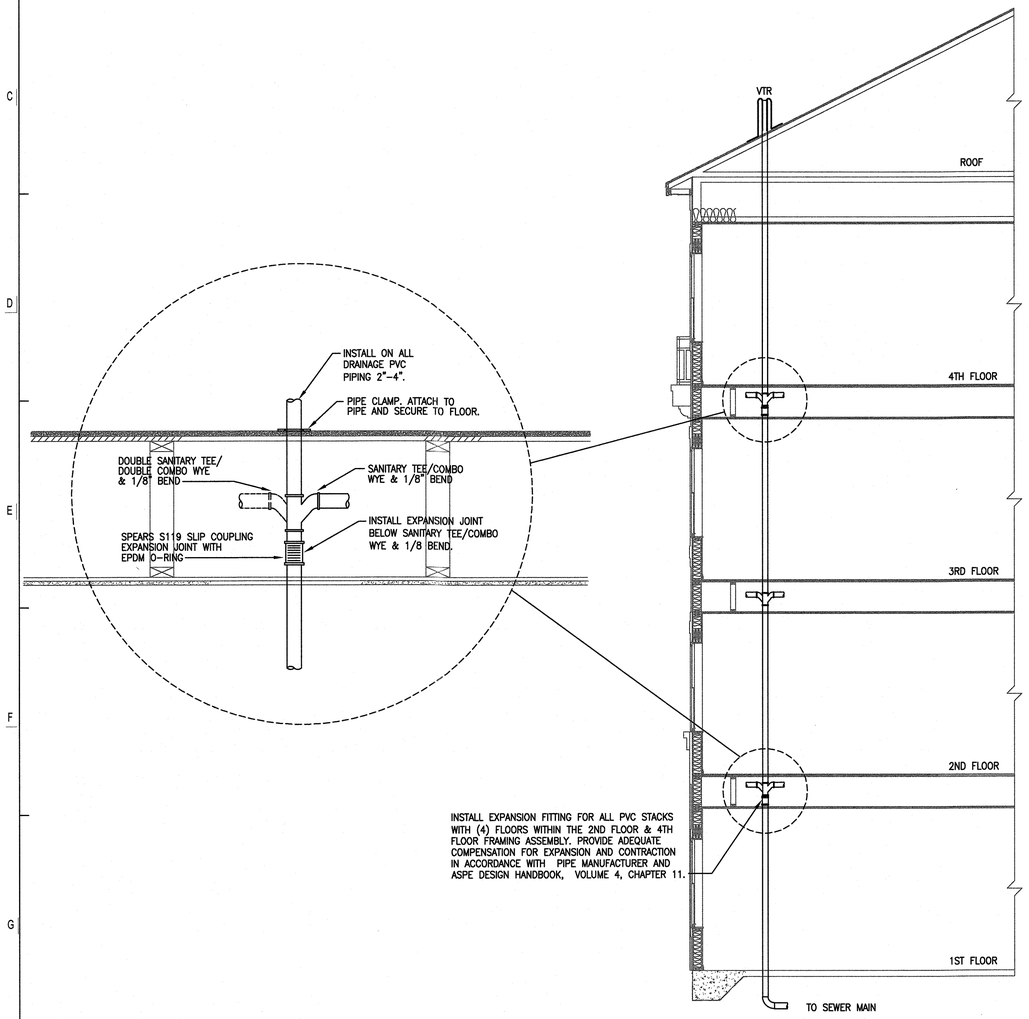

D1 NTS SANITARY WASTE STACK EXPANSION DETAIL NTS

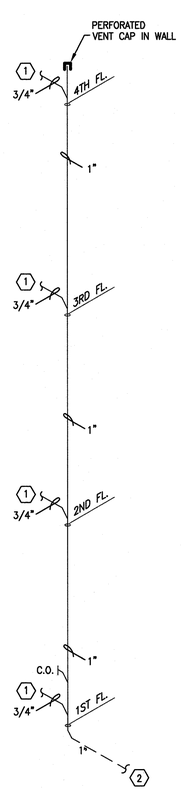

C1 NTS CONDENSATE RISER DIAGRAM

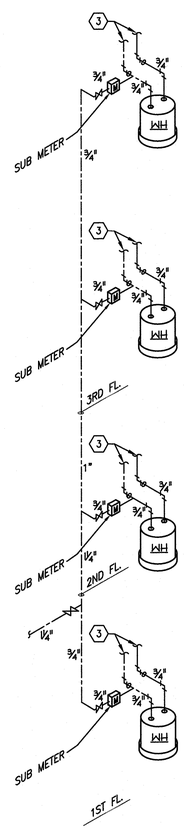

W1 NTS WATER RISER DIAGRAM

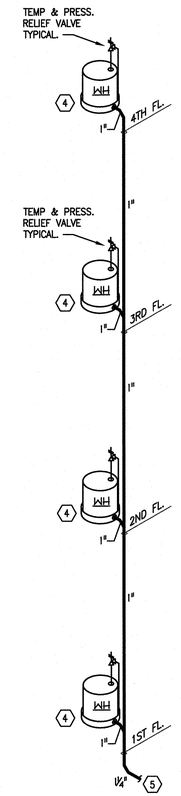

D1 NTS PAN DRAIN RISER DIAGRAM

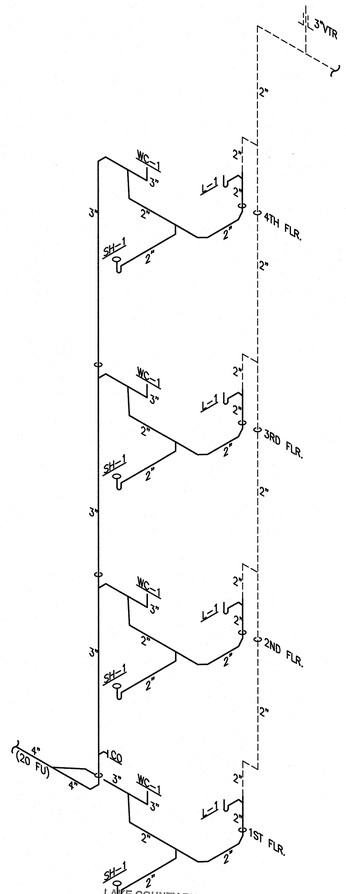

LAKE COUNTY BUILDING SERVICES
Any errors or omissions in these plans shall be made to conform with the applicable code requirements per Florida Building Code, in accordance with Section 107. Plans were reviewed for code compliance and shall be kept on job site.

S8 NTS SANITARY RISER DIAGRAM

RECEIVED FEB 14 2019

PERMIT REVIEW STAMP

ISSUE HISTORY

No.	Date	Description
1	02/08/2019	ISSUE FOR PERMIT

REVISION HISTORY

No.	Date	Description

FUGLEBERG KOCH
2555 Temple Trail, Winter Park, FL 32789 (407) 629-0595
www.fuglebergkoch.com BR569

CONSULTANT
Joseph, Lawrence & Co
Consulting Engineers
1180 HARWOOD AVE. SUITE 3000
ALTAMONTE SPRINGS, FLORIDA 32714
TEL: 321.972.4466
WWW.JLCENG.COM
CA NO. 28730

JLC 17.0137.00

ADAM J BARNEY LICENSE No. 69124 STATE OF FLORIDA PROFESSIONAL ENGINEER

Adam Joseph Barney
P.E. #:69124

SUMMER BAY APTS. II
LAKE COUNTY, FL

Drawn:	MJR/KCM
Checked:	BLS/AJB
Approval:	BLS/AJB
Date:	02/08/2019
Project #:	5389

RISER DIAGRAMS & DETAIL PLUMBING

P6.02

© 2015 These documents and their contents are the property of FUGLEBERG KOCH, PLLC - AJ20022103, and are issued only for the specific project noted on these drawings. Any reproductions, revisions, or modifications of these documents without the expressed written consent of Fugleberg Koch, PLLC is prohibited by law.

FIRE PROTECTION LEGEND

-----F-----	FIRE PROTECTION PIPING
-----DP-----	DRY PIPE SYSTEM PIPING
-----STP-----	STANDPIPE SYSTEM
(symbol)	PIPE TURNING DOWN
(symbol)	PIPE TURNING UP
(symbol)	PIPE CAP
(symbol)	CONTROL VALVE
(symbol)	CHECK VALVE
(symbol)	OS&Y GATE VALVE
(symbol)	VALVE WITH TAMPER SWITCH
FHV	FIRE HOSE VALVE
FS	FLOW SWITCH
FVC	FIRE VALVE CABINET
GPM	GALLONS PER MINUTE
ITC	INSPECTOR'S TEST CONNECTION
PS	PRESSURE SWITCH
PSI	POUNDS PER SQUARE INCH
SF	SQUARE FOOT
SP	STANDPIPE
TS	TAMPER SWITCH
WP	WET PIPE

FIRE PROTECTION GENERAL NOTES (APARTMENTS)

APPLICABLE CODES: FBC FLORIDA BUILDING CODE (2017) 6TH EDITION
FFPC FLORIDA FIRE PREVENTION CODE (2017) 6TH EDITION
NFPA 13/13R, 14, 20, 24 (2013) AND NFPA 25 (2014)

1. WET PIPE SPRINKLER SYSTEM DESIGNED PER NFPA 13R, CLASS 1, MANUAL WET STANDPIPE SYSTEM DESIGNED IN ACCORDANCE WITH NFPA 14. 500 GPM/100 PSI 1ST STANDPIPE, 250 GPM/100 PSI EACH ADDITIONAL STANDPIPE. ATTIC SHALL CONFORM TO NFPA 13. RESIDENTIAL OCCUPANCY (DWELLING UNITS) USING ALL SPRINKLERS IN A COMPARTMENT, UP TO A MAXIMUM OF FOUR SPRINKLERS, THAT REQUIRES THE GREATEST HYDRAULIC DEMAND PER THEIR LISTING TO MEET OR EXCEED THE REQUIREMENTS OF NFPA 13R AND LOCAL AUTHORITIES. (1)
2. ALL FIRE SPRINKLERS SHALL BE IN ACCORDANCE WITH NFPA 13R. RESIDENTIAL SPRINKLERS SHALL BE USED INSIDE THE DWELLING UNITS PER NFPA 13R, ALL OTHER SPRINKLERS SHALL BE OF THE QUICK RESPONSE TYPE.
3. ~~ALL MATERIALS~~, FABRICATION AND INSTALLATION IS TO BE IN ACCORDANCE WITH NFPA 13R, 2013 EDITION, NFPA 14, AND APPROVED BY THE LOCAL AUTHORITIES. (1)
4. ALL HANGERS & MATERIALS TO BE IN ACCORDANCE WITH NFPA 13R, NFPA 14.
5. FIRE SPRINKLER CONTRACTOR WILL VISIT THE SITE AND VERIFY ALL CONDITIONS BEFORE ANY FABRICATION AND INSTALLATION HAS BEGUN.
6. FIRE SPRINKLER CONTRACTOR WILL COORDINATE WORK WITH OTHER TRADES THAT MAY COME INTO CONFLICT BEFORE ANY INSTALLATION.
7. FIRE SPRINKLER CONTRACTOR TO COORDINATE SPRINKLER LOCATIONS WITH ALL OTHER CEILING AND WALL FIXTURES. SEE ARCHITECTURAL PLANS FOR CEILING FIXTURE LOCATIONS.
8. ALL BRANCH LINES AND CROSS MAINS ON RESIDENTIAL UNIT FLOORS TO BE BLAZEMASTER CPVC (OR APPROVED EQUAL) PER THEIR LISTING AND GALVANIZED STEEL PIPE FOR ANY EXPOSED PIPING INCLUDING THE FIRE SPRINKLER RISER. ALL TRANSITIONS FROM STEEL TO CPVC PIPING WILL BE MADE WITH UL APPROVED FITTINGS.
9. ALL FITTINGS FOR CPVC BRANCH LINES AND CROSS MAINS TO BE BLAZEMASTER CPVC (OR APPROVED EQUAL). ALL FITTINGS FOR THE GALVANIZED STEEL PIPING SHALL BE BLACK CAST IRON OR GROOVED.
10. ALL FIRE SPRINKLER COMPONENTS SHALL BE U.L. APPROVED.
11. UPRIGHT SPRINKLERS TO BE LOCATED BETWEEN 1" AND 12" BELOW ROOF DECK WHERE REQUIRED.
12. SPRINKLER HEAD SPACING IS PER NFPA 13R AND MANUFACTURER'S LISTING.
13. THE CONSTRUCTION MANAGER SHALL PROVIDE, OR HAVE PROVIDED, A SET OF COORDINATION DRAWINGS FOR ALL SYSTEMS AND FEATURES THAT OCCUR ABOVE THE CEILING PLANE. THE COORDINATION DRAWINGS SHALL INCLUDE, BUT NOT BE LIMITED TO, STRUCTURAL MEMBERS, HVAC DUCTWORK, HYDRAULIC PIPING, PLUMBING SUPPLY AND WASTE PIPING, FIRE PROTECTION PIPING, ELECTRICAL POWER CONDUITS AND RACEWAYS, AND ELECTRICAL LOW VOLTAGE CONDUITS AND RACEWAYS. THE COORDINATION DRAWINGS SHALL PROVIDE, APPORTION, AND COORDINATE SPACE FOR ALL SYSTEMS, HORIZONTALLY AND VERTICALLY ABOVE THE CEILING PLANE TO THE STRUCTURAL DECK ABOVE ALLOWING EACH TRADE CONTRACTOR THE SPACE TO PROPERLY EXECUTE HIS PORTION OF THE WORK.
14. THE FOLLOWING AREAS ARE NOT REQUIRED TO HAVE SPRINKLER HEADS PER NFPA 13R:
    A. BATHROOMS NOT EXCEEDING 55 SQ. FT. WITH NONCOMBUSTIBLE WALLS AND CEILINGS.
    B. CLOTHES CLOSETS, LINEN CLOSETS AND PANTRIES NOT EXCEEDING 24 SQ. FT. & 36" FOR THE LEAST WALL DIMENSION.
    C. PORCHES, STAIRS THAT ARE OPEN AND ATTACHED.
    D. ATTICS, PENTHOUSE EQUIPMENT ROOMS, ELEVATOR MACHINE ROOMS, CONCEALED SPACES DEDICATED EXCLUSIVELY TO AND CONTAINING ONLY DWELLING UNIT VENTILATION EQUIPMENT, CRAWL SPACES, FLOOR/CEILING SPACES, ELEVATOR SHAFTS, AND OTHER CONCEALED SPACES THAT ARE NOT USED OR INTENDED FOR LIVING PURPOSES OR STORAGE AND DO NOT CONTAIN FUEL FIRED EQUIPMENT. SPRINKLERS SHALL NOT BE REQUIRED IN CLOSETS ON EXTERIOR BALCONIES, REGARDLESS OF SIZE, AS LONG AS THERE ARE NO DOORS OR UNPROTECTED PENETRATIONS FROM THE CLOSET DIRECTLY INTO THE DWELLING UNIT.
15. ALL GROOVED FITTINGS TO BE "VICTAULIC" FITTINGS OR APPROVED EQUAL.
16. ALL PENETRATIONS THRU 1-HOUR AND 2-HOUR RATED WALLS TO BE PATCHED AS NECESSARY.
17. ALL DIMENSIONS TO BE VERIFIED DURING FIELD CHECK OF SPRINKLER SYSTEM.
18. THE FOLLOWING ARE ACCEPTABLE SPRINKLER HEAD MATERIAL MANUFACTURERS: RELIABLE, TYCO, VICTAULIC, VIKING.
19. FLOW SWITCHES, TAMPER SWITCHES AND ALARM BELL SHALL BE PROVIDED AND INSTALLED BY THE FIRE SPRINKLER CONTRACTOR. SPRINKLER SYSTEMS AND ALL ASSOCIATED FIRE PROTECTION SIGNALS SHALL BE SUPERVISED BY AN APPROVED CENTRAL, PROPRIETARY, AUXILIARY, OR REMOTE STATION SYSTEM IN ACCORDANCE WITH NFPA 13R. ALL WIRING TO BE PROVIDED BY ELECTRICAL CONTRACTOR.
20. FIRE PROTECTION SHOP DRAWINGS, HYDRAULIC CALCULATIONS, AND MATERIAL DATA SUBMITTALS ARE TO BE SUBMITTED TO THE ARCHITECT AND ENGINEER OF RECORD FOR REVIEW AND APPROVAL.
21. THE INTENT, AND EXTENT, OF THIS SYSTEM DESIGN IS AS ILLUSTRATED, BUT IS DIAGRAMMATIC ONLY. IT IS THE RESPONSIBILITY OF THE FIRE SPRINKLER CONTRACTOR TO ASSEMBLE A SET OF DRAWINGS DEPICTING THE ACTUAL PIPING CONFIGURATION FOR EACH BUILDING IN ITS ENTIRETY PRIOR TO SUBMITTAL TO ENGINEER OF RECORD FOR REVIEW. HYDRAULIC CALCULATIONS ARE PROVIDED TO VERIFY THE ADEQUACY OF THE WATER SUPPLY. THE SPRINKLER CONTRACTOR SHALL PROVIDE A SET OF HYDRAULIC CALCULATIONS FOR EACH BUILDING TYPE USING A FLOW TEST CURRENT TO WITHIN SIX MONTHS.
22. CORROSION PROTECTION FOR ALL UNDERGROUND BOLTED JOINT ACCESSORIES SHALL BE CLEANED AND THOROUGHLY COATED WITH ASPHALT OR OTHER CORROSION-RETARDING MATERIAL AFTER INSTALLATION IN ACCORDANCE WITH NFPA 13 SECTION 10.3.6.2.
23. THE UNDERGROUND MAIN STARTING AT THE PUBLIC WATER UTILITY POINT OF CONNECTION HAS BEEN DESIGNED TO NFPA 24. INSTALLATION AND TESTING MUST BE IN ACCORDANCE WITH NFPA 24.
24. ALL TEES, PLUGS, CAPS, BENDS, REDUCERS, VALVES, AND HYDRANT BRANCHES SHALL BE RESTRAINED AGAINST MOVEMENT BY USING THRUST BLOCKS OR RESTRAINED JOINT SYSTEMS IN ACCORDANCE WITH NFPA 24.
25. ALL FIRE SPRINKLER COMPONENTS ARE TO BE RATED FOR THE MAXIMUM SYSTEM WORKING PRESSURE TO WHICH THEY ARE EXPOSED IN ACCORDANCE WITH NFPA 13.
26. THE COMPONENTS OF THE FIRE PROTECTION SYSTEM(S) FURNISHED UNDER THIS DIVISION OF THE SPECIFICATIONS SHALL BE GUARANTEED FOR A PERIOD OF ONE (1) YEAR FROM THE DATE OF ACCEPTANCE THEREOF, EITHER FOR BENEFICIAL USE OR FINAL ACCEPTANCE, WHICHEVER IS EARLIER, AGAINST DEFECTIVE MATERIALS, DESIGN, AND WORKMANSHIP. UPON RECEIPT OF NOTICE FROM THE ARCHITECT OF FAILURE OF ANY PART OF THE EQUIPMENT DURING THE GUARANTEE PERIOD, THE AFFECTED PART OR PARTS SHALL BE REPLACED PROMPTLY WHICH INCLUDES REMOVING THE DEFECTIVE PART OR PARTS, REPLACING AND INSTALLING THE NEW PART OR PARTS AND AT THE EXPENSE OF THE CONTRACTOR.
27. CPVC PIPING SHALL BE COMPATIBLE WITH ANTI-MICROBIAL COATED BLACK STEEL FIRE SPRINKLER PIPE. TESTING HAS SHOWN THAT CERTAIN ANTI-MICROBIAL COATING PRODUCTS CAN BE COMPATIBLE WITH CPVC PIPING. HOWEVER, THE POTENTIAL FOR COMPATIBILITY PROBLEMS CAN BE PRESENT IN INSTALLATIONS WHERE CPVC MATERIALS ARE HIGHLY STRESSED.
28. SPRINKLER PROTECTION SHALL BE PROVIDED FOR EXTERIOR BALCONIES, DECKS AND GROUND FLOOR PATIOS OF DWELLING UNITS WHERE THE BUILDING IS OF TYPE V CONSTRUCTION, PROVIDED THERE IS A ROOF OR DECK ABOVE. SIDEWALL SPRINKLERS THAT ARE USED TO PROTECT SUCH AREAS SHALL BE PERMITTED TO BE LOCATED SUCH THAT THEIR DEFLECTORS ARE WITHIN 1 INCH TO 6 INCHES BELOW THE STRUCTURAL MEMBERS AND A MAXIMUM DISTANCE OF 14 INCHES BELOW THE DECK OF THE EXTERIOR BALCONIES AND DECKS THAT ARE CONSTRUCTED OF OPEN WOOD JOIST CONSTRUCTION.
29. THE FIRE SPRINKLER CONTRACTOR SHALL PREPARE DETAILED WORKING PLANS IN ACCORDANCE WITH NFPA 13R, NFPA 14 THE FIRE PROTECTION SYSTEM LAYOUT SHALL FOLLOW THE DESIGN GUIDELINES SET FORTH IN THESE FIRE PROTECTION SYSTEM ENGINEERING DOCUMENTS.
30. THE FIRE SPRINKLER CONTRACTOR SHALL OBTAIN THE ACCEPTANCE TESTS FROM THE LOCAL AUTHORITY. THE ACCEPTANCE TEST FOR THE OVERHEAD SPRINKLER SYSTEM PIPING SHALL BE IN ACCORDANCE WITH NFPA 13R CHAPTER 10 USING THE MATERIAL AND TEST CERTIFICATE FOR ABOVEGROUND PIPING IN FIGURE 10.1.2. THE ACCEPTANCE TEST FOR THE UNDERGROUND PIPING SHALL BE IN ACCORDANCE WITH NFPA 13 CHAPTER 10, SECTION 10.10 USING THE MATERIAL AND TEST CERTIFICATE FOR UNDERGROUND PIPING IN FIGURE 10.10.1.
31. THE POINT OF SERVICE IS INDICATED AT THE SYSTEM SIDE OF THE BACKFLOW PREVENTER. AT THIS POINT, THE SYSTEM IS DEDICATED SOLELY FOR FIRE PROTECTION PURPOSES. NO DOMESTIC WATER SHALL BE TAKEN FROM THE SYSTEM BEYOND THIS POINT FOR OTHER PURPOSES.
32. CLASSIFICATIONS OF HAZARD OCCUPANCIES FOR THE AREAS OF DESIGN SHALL BE AS FOLLOWS: (RESIDENTIAL FLOORS) RESIDENTIAL OCCUPANCY PER NFPA 13R.
33. THE SPRINKLER SYSTEM SHALL BE WET PIPE FOR THE RESIDENTIAL FLOORS, WITH THE REMOTE AREA USING ALL SPRINKLERS WITHIN A COMPARTMENT, UP TO A MAXIMUM OF 4 SPRINKLERS, THAT REQUIRE THE GREATEST HYDRAULIC DEMAND, TO MEET OR EXCEED THE REQUIREMENTS OF NFPA 13R, AND LOCAL AUTHORITIES. SPRINKLERS SHALL HAVE A MINIMUM TEMPERATURE RATING OF 155° AND THE SPACING SHALL BE PER NFPA 13R OR MANUFACTURERS LISTING.
34. SEE CIVIL UTILITIES PLAN FOR WATER SUPPLY PIPING LOCATIONS.
35. IF THE FLOW TEST BECOMES GREATER THAN SIX (6) MONTHS OLD BY THE TIME OF FIRE SPRINKLER PERMIT SUBMITTAL, A NEW TEST SHALL BE OBTAINED BY THE FIRE SPRINKLER CONTRACTOR.
36. VALVE AND ALARM REQUIREMENTS: ALL CONTROL VALVES ON SPRINKLER RISERS AND FIRE PROTECTION BACKFLOW PREVENTERS SHALL HAVE A TAMPER SWITCH. THE FLOW SWITCH SHALL BE SET TO NOT ALARM WITH MINOR CITY WATER PRESSURE FLUCTUATIONS. HOWEVER, THE FLOW OF ONE SPRINKLER HEAD SHALL PRODUCE AN ALARM CONDITION BY TRIPPING THE FLOW SWITCH. ALL FLOW AND TAMPER SWITCHES SHALL BE CONNECTED TO THE BUILDING FIRE ALARM PANEL. FLOW SWITCHES SHALL ALSO SOUND THE ELECTRIC ALARM BELL ON THE OUTSIDE WALL. FIRE SPRINKLER CONTRACTOR SHALL VERIFY AND TEST PER NFPA 13.
37. THE LOCAL WATER PURVEYOR IS REQUESTED TO ADVISE THE ENGINEER OF RECORD IF CONDITIONS EXIST IN THEIR WATER SUPPLY THAT COULD LEAD TO MIC, SO THAT THE ENGINEER CAN DESIGN CORRECTIVE MEASURES. THERE ARE NO KNOWN MIC CONDITIONS IN THE LOCAL WATER SUPPLY.
38. BACKFLOW PREVENTER AND METERING SPECIFICATIONS SHALL MEET OR EXCEED REQUIREMENTS OF THE LOCAL JURISDICTION.
39. YARD AND INTERIOR FIRE PROTECTION COMPONENTS: PRODUCT DATA SHEETS SHALL BE SUBMITTED BY THE SPRINKLER CONTRACTOR ALONG WITH THEIR SHOP DRAWINGS. ALL FIRE PROTECTION DEVICES AND COMPONENTS SHALL BE UL LISTED AND FM APPROVED.
40. REFER TO ARCHITECTURAL PLANS FOR ALL RELATED DETAILS. (1)

FIRE SERVICE PIPE MATERIAL & TESTING NOTES

1. ALL PRIVATE FIRE SERVICE MAINS/LINES LOCATED DOWNSTREAM OF THE POINT OF SERVICE SHALL BE INSTALLED BY A QUALIFIED AND LICENSED CONTRACTOR CLASS I, II, OR V WITH 3' MINIMUM COVER. CONSTRUCTION SHALL COMPLY WITH ALL APPLICABLE FIRE CODES. CONTRACTOR TO VERIFY REQUIREMENTS BEFORE START OF CONSTRUCTION. COMBINATION MAINS (SHARED DOMESTIC AND FIRE SUPPRESSION SERVICE) UP TO THE DEDICATED FIRE SUPPRESSION SYSTEM POINT OF SERVICE CAN BE INSTALLED BY A LICENSED UNDERGROUND EXCAVATION OR SITE UTILITY CONTRACTOR.
2. POINT OF SERVICE IS TO BE DESIGNATED FOR ALL BUILDINGS EQUIPPED WITH AUTOMATIC SPRINKLER SYSTEM.
3. THE UNDERGROUND MAIN STARTING AT THE PUBLIC WATER UTILITY POINT OF CONNECTION HAS BEEN DESIGNED TO NFPA 24. MATERIALS, INSTALLATION AND TESTING MUST BE IN ACCORDANCE WITH NFPA 24.
4. ALL NEW PRIVATE FIRE SERVICE MAINS/LINES AND HYDRANTS SHALL BE FLUSHED AND HYDROSTATIC TESTED TO 200 PSI FROM THE POINT OF SERVICE AS PER NFPA 24 CHAPTER 9.
5. THE UNDERGROUND MAIN STARTING AT THE POINT OF SERVICE HAS BEEN DESIGNED TO NFPA 24.
6. FIRE SERVICE MAINS/LINES SHALL BE POLYVINYL CHLORIDE PRESSURE PIPE CONFORMING TO AWWA C900 WITH DIMENSION RATIO (DR) OF EIGHTEEN (18) AND A MINIMUM PRESSURE CLASS OF TWO HUNDRED POUNDS PER SQUARE INCH (200 P.S.I.) UNLESS NOTED OTHERWISE.

F.A.C. 61G15

THE CONTRACTOR'S FIRE PROTECTION ENGINEER, AS THE "DELEGATED ENGINEER" SHALL BE THE "ENGINEER OF RECORD" FOR THE FIRE PROTECTION SYSTEM AND SHALL PREPARE COMPLETE AND FINAL FIRE PROTECTION DESIGN DOCUMENTS WITH THE HYDRAULIC CALCULATIONS, SIGNED AND SEALED, AS DEFINED BY THE F.A.C. 61G15 AND SHALL SUBMIT REQUIRED DOCUMENTATION TO THE ARCHITECT FOR REVIEW BY THEIR "PRIME PROFESSIONAL ENGINEER" CONSULTANT TO REVIEW FOR BASIC DESIGN CRITERIA. UPON APPROVAL THE CONTRACTOR SHALL SUBMIT SIGNED AND SEALED DOCUMENTS TO THE AHJ FOR REVIEW AND APPROVAL.

SUBMITTALS

FIRE SPRINKLER SYSTEM SHOP DRAWINGS, HYDRAULIC CALCULATIONS, SPECIFICATIONS, AND DETAILS SHALL BE PROVIDED BY THE SELECTED FIRE SPRINKLER CONTRACTOR UNDER SEPARATE PERMIT FOR REVIEW AND APPROVAL PRIOR TO INSTALLATION. THIS INCLUDES BOTH THE ABOVEGROUND AND THE BELOWGROUND PORTIONS OF THE SYSTEMS. (1)

61G15-32.004 DESIGN OF WATER BASED FIRE PROTECTION SYSTEMS

1. DESIGN FOR APARTMENT BUILDINGS IS WATER BASED FIRE PROTECTION SYSTEM WHICH INCLUDES A WET AUTOMATIC FIRE SPRINKLER SYSTEM CONSISTING OF FIRE WATER SPRINKLER MAINS, BRANCH LINES, FIRE SPRINKLER HEADS AND HANGER DEVICES CONNECTED TO A DEDICATED FIRE PROTECTION WATER SOURCE.
2. THESE FIRE PROTECTION SYSTEM ENGINEERING DOCUMENTS INCLUDE AS A MINIMUM THE FOLLOWING APPLICABLE INFORMATION, UNLESS NOTED OTHERWISE AS NOT APPLICABLE:
   A. THE POINT OF SERVICE (P.O.S) FOR THE FIRE PROTECTION WATER SUPPLY AS DEFINED BY SECTION 633.021(18), F.S. WHERE PIPING IS DEDICATED SOLELY FOR FIRE PROTECTION USE IS SHOWN ON CIVIL PLANS.
   B. APPLICABLE NFPA STANDARD TO BE APPLIED IS NFPA-13R AND NFPA-14. (1)
   C. CLASSIFICATION OF HAZARD OCCUPANCY FOR EACH ROOM OR AREA AS DEFINED IN NFPA-13 IS AS FOLLOWS: LIVING UNITS AND RELATED AREAS ARE LIGHT HAZARD OCCUPANCY.
   D. DESIGN APPROACH IS A WET SYSTEM TYPE. DESIGN DENSITIES ARE 0.10 GPM/SQUARE FOOT OVER THE MOST HYDRAULICALLY DEMANDING AREA OR WITH A MAXIMUM OF 4 HEADS FLOWING FOR LIGHT HAZARD OCCUPANCIES. FIRE SPRINKLER DEVICE TEMPERATURE RATING SHALL BE NOMINAL 165 DEGREES F., ORDINARY TEMPERATURE RATING CLASSIFICATION, UNLESS NOTED OTHERWISE.
   E. CHARACTERISTICS OF EXISTING WATER SUPPLY TO BE USED ARE MAINS SHOWN ON CIVIL SITE UTILITY PLANS.
   F. FIRE HYDRANT FLOW TEST CONDUCTED OFF THE EXISTING PUBLIC WATER SUPPLY IS INTENDED TO BE USED FOR VERIFICATION OF SELECTED FINAL PIPE SIZES.

LOCATION:	HWY 192 & SUMMER BAY APTS.
STATIC PRESSURE:	68 PSI
RESIDUAL PRESSURE:	56 PSI
FLOW AT TEST:	1130
DATE:	07/22/16 @ 8:50 A.M.
BY:	WAYNE AUTOMATIC FIRE SPRINKLER

FLOW TEST DATA: CONTRACTOR SHALL PERFORM A FLOW TEST OR OBTAIN A FLOW TEST OF NOT MORE THAN (6) MONTHS OLD. THE AVAILABLE WATER PRESSURE SHALL BE SUFFICIENT FOR SUPPLYING THE DURATION AS WELL AS THE HYDRAULIC DEMAND REQUIRED BY THE FIRE SPRINKLER SYSTEM. (1)

   G. VALVING AND ALARM REQUIREMENTS TO MINIMIZE POTENTIAL FOR IMPAIRMENTS AND UNRECOGNIZED FLOW OF WATER ARE PROVIDED BY SUPERVISORY VALVE TAMPER SWITCHES INSTALLED ON INTERIOR SHUT-OFF VALVES. WATER FLOW ALARM IS SIGNALED BY WATER FLOW SWITCH SHOWN ON FIRE SPRINKLER RISER DETAIL.
   H. FAMILIARITY WITH CONDITIONS IN THE LOCAL AREA INDICATE WATER SUPPLIES DO NOT RESULT IN MICROBIAL INDUCED CORROSION (MIC). THE FIRE SPRINKLER CONTRACTOR SHALL MAKE REASONABLE EFFORTS TO IDENTIFY WATER SUPPLIES THAT COULD LEAD TO MICROBIAL INDUCED CORROSION (MIC). ADDITIONAL EFFORTS MAY CONSIST OF DISCUSSIONS WITH THE LOCAL WATER PURVEYOR AND/OR FIRE OFFICIAL OR LABORATORY TESTING OF WATER SUPPLIES. WHEN CONDITIONS ARE FOUND THAT MAY RESULT IN MIC CONTAMINATION OF THE FIRE PROTECTION PIPING, CORRECTIVE MEASURES SHALL BE TAKEN.
   I. LOCATION OF CHECK BACKFLOW PREVENTER IS LOCATED IN THE RISER.
   J. QUALITY AND PERFORMANCE SPECIFICATIONS OF ALL EXTERIOR YARD FIRE PROTECTION COMPONENTS SUCH AS FIRE HYDRANT ASSEMBLIES AND THEIR LOCATIONS ARE SHOWN ON CIVIL SITE UTILITY PLANS. QUALITY AND PERFORMANCE SPECIFICATIONS OF ALL INTERIOR FIRE PROTECTION COMPONENTS ARE SHOWN ON FIRE PROTECTION DRAWING SHEET.
   K. FIRE PUMP TO SATISFY SYSTEM PRESSURE FOR APARTMENT BUILDINGS IS NOT ANTICIPATED TO BE REQUIRED.
   L. FIREWATER STORAGE TANK TO SATISFY SYSTEM VOLUME FOR APARTMENT BUILDINGS IS NOT ANTICIPATED TO BE REQUIRED.

DESIGN HAZARD SCHEDULE

APARTMENTS UNITS
THE SPRINKLER SYSTEM SHALL BE 13R WET PIPE FOR THE RESIDENTIAL FLOORS, WITH THE REMOTE AREA USING ALL SPRINKLERS WITHIN A COMPARTMENT, UP TO A MAXIMUM OF 4 SPRINKLERS, THAT REQUIRE THE GREATEST HYDRAULIC DEMAND, TO MEET OR EXCEED THE REQUIREMENTS OF NFPA 13R, 2013 EDITION, AND LOCAL AUTHORITIES. SPRINKLERS SHALL HAVE A MINIMUM TEMPERATURE RATING OF 155° AND THE SPACING SHALL BE PER NFPA 13R.

STORAGE SPACE, MECHANICAL ROOMS

OCCUPANCY CLASSIFICATION:	ORDINARY HAZARD GRP-1, NFPA 13
SYSTEM TYPE:	WET
DESIGN DENSITY:	0.15 GPM/SQ. FT.
HYDRAULIC AREA OF APPLICATION:	MOST REMOTE 1,500 Sq.ft.
MAXIMUM HEAD COVERAGE:	130 SQ. FT.
TEMPERATURE RATING:	165 DEGREES FAHRENHEIT U.N.O.
HOSE STREAM ALLOWANCE:	250 GPM
DURATION:	60 TO 90 MINUTES

(1)

LAKE COUNTY BUILDING SERVICES
Any errors or omissions in these plans shall be made to conform with the applicable code requirements per Florida Building Code, in accordance with Section 107. Plans were reviewed for code compliance and shall be kept on job site.

RECEIVED FEB 14 2019

PERMIT REVIEW STAMP

ISSUE HISTORY

No.	Date	Description
1	02/08/2019	ISSUE FOR PERMIT

REVISION HISTORY

No.	Date	Description
1	12/18/2018	PERMIT REVIEW RESPONSE

FUGLEBERG KOCH
2555 Temple Trail, Winter Park, FL 32789 (407) 629-0595
www.fuglebergkoch.com BR569

CONSULTANT
Joseph, Lawrence & Co
Consulting Engineers
1180 HARWOOD AVE. SUITE 3000
ALTAMONTE SPRINGS, FLORIDA 32714
TEL: 321.972.4466
WWW.JLCENG.COM
CA NO. 28730

JLC 17.0137.00
ADAM J BARNEY LICENSE No. 69124 STATE OF FLORIDA PROFESSIONAL ENGINEER
Adam Joseph Barney
P.E. #:69124

SUMMER BAY APTS. II	Drawn:	MJR/KCM
	Checked:	BLS/AJB
	Approval:	BLS/AJB
	Date:	02/08/2019
LAKE COUNTY, FL	Project #:	5389

SYMBOL LEGEND & GENERAL NOTES - FIRE PROTECTION

FP0.01

© 2015 These documents and their contents are the property of FUGLEBERG KOCH, PLLC - AA26002103, and are issued only for the specific project noted on these drawings. Any reproductions, revisions, or modifications of these documents without the expressed written consent of Fugleberg Koch, PLLC is prohibited by law.

REFERENCE NOTES: (X)

1. SPRINKLER RISER UP TO UNITS ABOVE.
2. STANDPIPE UP.
3. 2½" FROM STANDPIPE CONNECT TO 2½" FIRE HOSE VALVE LOCATED WITHIN RECESSED FIRE HOSE VALVE CABINET.
4. STANDPIPE ISOLATION SHUT-OFF VALVE WITH VALVE TAMPER SWITCH.
5. FIRE SPRINKLER RISER, SEE DETAIL.
6. FIRE PROTECTION SUPPLY PIPING LOCATED BELOW GRADE, FOR CONTINUATION SEE CIVIL SITE UTILITY PLANS.
7. SPRINKLER PIPING TO SPRINKLER COVERAGE FOR GARAGES.
8. FLOOR CONTROL VALVE ASSEMBLY, SEE DETAIL.
9. FREEZE PROTECT PIPING TO MAINTAIN 40° DEG. F.

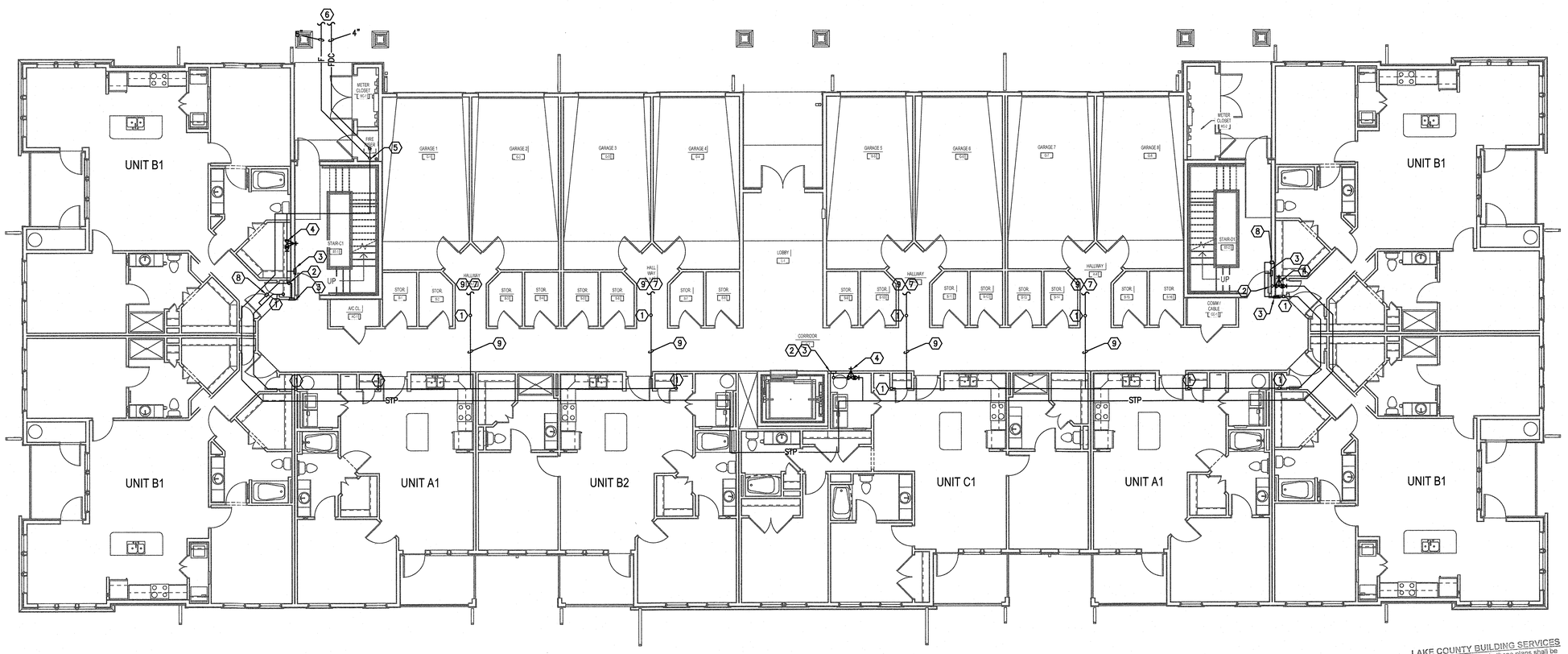

H1 BUILDING TYPE 2 - GROUND LEVEL - FIRE PROTECTION
1/8" = 1'-0"

LAKE COUNTY BUILDING SERVICES
Any errors or omissions in these plans shall be made to conform with the applicable code requirements per Florida Building Code, in accordance with Section 107. Plans were reviewed for code compliance and shall be kept on job site.

RECEIVED FEB 14 2019

PERMIT REVIEW STAMP

ISSUE HISTORY

No.	Date	Description
1	02/08/2019	ISSUE FOR PERMIT

REVISION HISTORY

No.	Date	Description

© 2015 These documents and their contents are the property of FUGLEBERG KOCH, PLLC - AA26002103, and are issued only for the specific project noted on these drawings. Any reproductions, revisions, or modifications of these documents without the expressed written consent of Fugleberg Koch, PLLC is prohibited by law.

FUGLEBERG KOCH
2555 Temple Trail, Winter Park, FL 32789 (407) 629-0595
www.fuglebergkoch.com BR569

CONSULTANT
Joseph, Lawrence & Co
Consulting Engineers
1180 HARWOOD AVE. SUITE 3000
ALTAMONTE SPRINGS, FLORIDA 32714
TEL: 321.972.4466
WWW.JLCENG.COM
CA NO. 28730

JLC 17.0137.00

ADAM J BARNEY LICENSE No. 69124 STATE OF FLORIDA PROFESSIONAL ENGINEER

Adam Joseph Barney
P.E. #:69124

SUMMER BAY APTS. II
LAKE COUNTY, FL

Drawn:	MJR/KCM
Checked:	BLS/AJB
Approval:	BLS/AJB
Date:	02/08/2019
Project #:	5389

BUILDING TYPE 2 - GROUND FLOOR PLAN - FIRE PROT.

FP3.01

REFERENCE NOTES: (X)

1. SPRINKLER RISER LOCATED WITHIN WALL.
2. STANDPIPE LOCATED WITHIN WALL.
3. 2½" FROM STANDPIPE CONNECT TO 2½" FIRE HOSE VALVE LOCATED WITHIN RECESSED FIRE HOSE VALVE CABINET.
4. ALTHOUGH NOT SHOWN, PROVIDE SPRINKLER COVERAGE FOR CORRIDORS.
5. STANDPIPE UP.

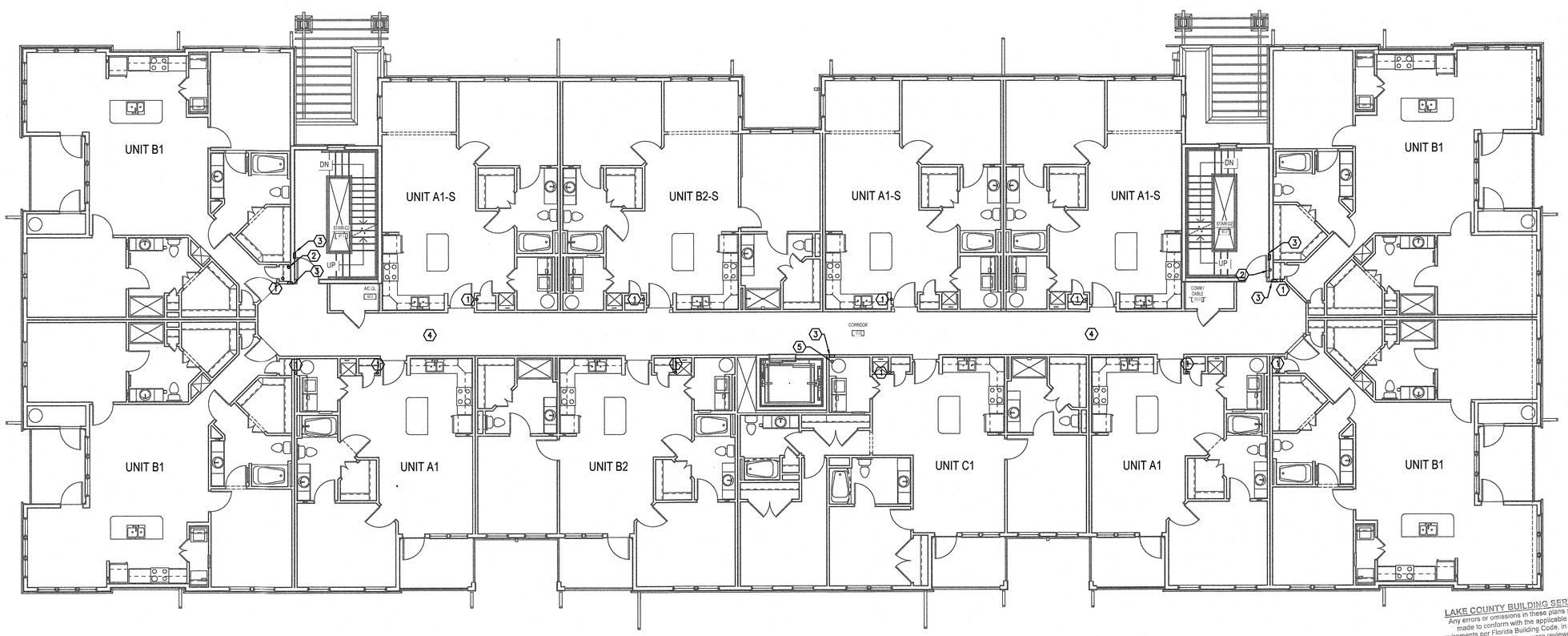

H1 BUILDING TYPE 2 - LEVEL 2 - FIRE PROTECTION
1/8" = 1'-0"

LAKE COUNTY BUILDING SERVICES
Any errors or omissions in these plans shall be made to conform with the applicable code requirements per Florida Building Code, in accordance with Section 107. Plans were reviewed for code compliance and shall be kept on job site.

RECEIVED FEB 14 2019

PERMIT REVIEW STAMP

ISSUE HISTORY

No.	Date	Description
1	02/08/2019	ISSUE FOR PERMIT

REVISION HISTORY

No.	Date	Description

FUGLEBERG KOCH
2555 Temple Trail, Winter Park, FL 32789 (407) 629-0595
www.fuglebergkoch.com BR569

CONSULTANT
Joseph, Lawrence & Co
Consulting Engineers
1180 HARWOOD AVE. SUITE 3000
ALTAMONTE SPRINGS, FLORIDA 32714
TEL: 321.972.4466
WWW.JLCENG.COM
CA NO. 28730

JLC 17.0137.00

ADAM J BARNEY
LICENSE
No. 69124
STATE OF FLORIDA
PROFESSIONAL ENGINEER

Adam Joseph Barney
P.E. #:69124

SUMMER BAY APTS. II
LAKE COUNTY, FL

Drawn:	MJR/KCM
Checked:	BLS/AJB
Approval:	BLS/AJB
Date:	02/08/2019
Project #:	5389

BUILDING TYPE 2 - LEVEL 2 PLAN - FIRE PROT.

FP3.02

© 2015 These documents and their contents are the property of FUGLEBERG KOCH, PLLC - AA26002103, and are issued only for the specific project noted on these drawings. Any reproductions, revisions, or modifications of these documents without the expressed written consent of Fugleberg Koch, PLLC is prohibited by law.

REFERENCE NOTES: (X)

1. SPRINKLER RISER LOCATED WITHIN WALL.
2. STANDPIPE LOCATED WITHIN WALL.
3. 2½" FROM STANDPIPE CONNECT TO 2½" FIRE HOSE VALVE LOCATED WITHIN RECESSED FIRE HOSE VALVE CABINET.
4. ALTHOUGH NOT SHOWN, PROVIDE SPRINKLER COVERAGE FOR CORRIDORS.
5. STANDPIPE UP.

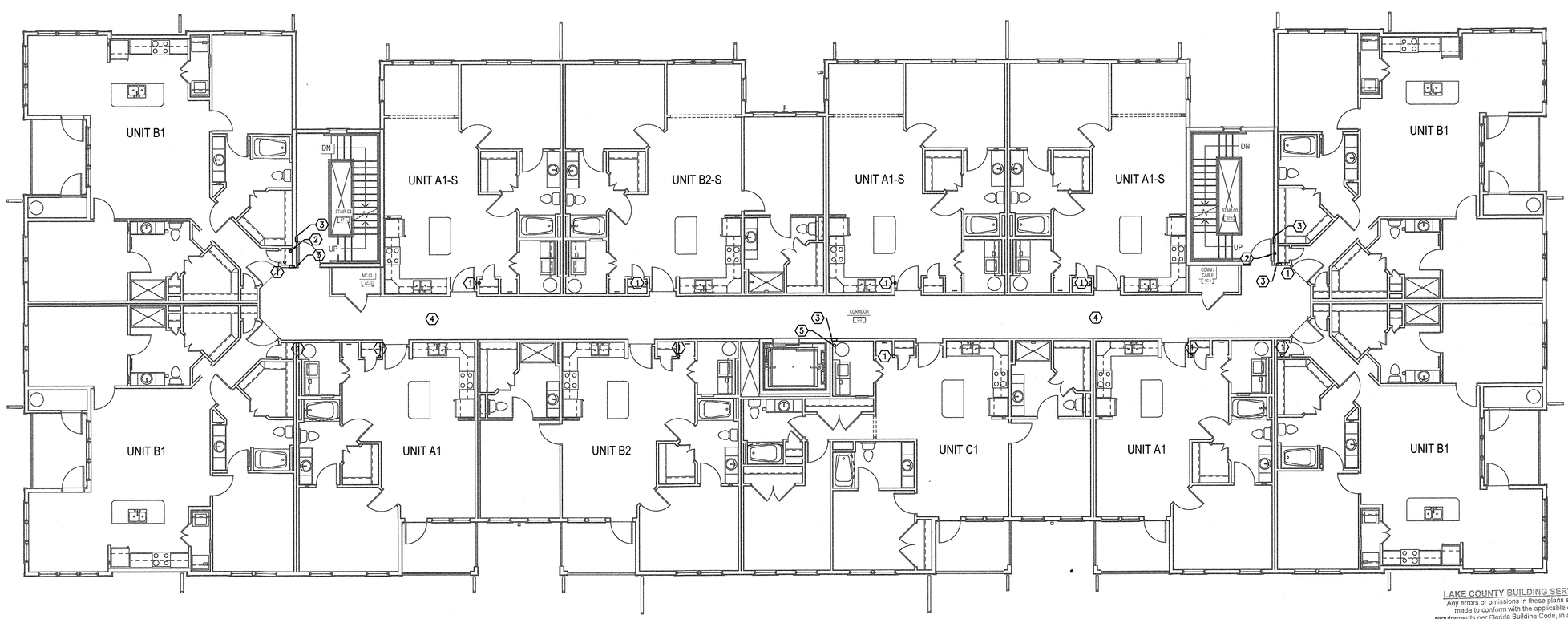

H1 BUILDING TYPE 2 - LEVEL 3 - FIRE PROTECTION
1/8" = 1'-0"

LAKE COUNTY BUILDING SERVICES
Any errors or omissions in these plans shall be made to conform with the applicable code requirements per Florida Building Code, in accordance with Section 107. Plans were reviewed for code compliance and shall be kept on job site.

RECEIVED FEB 14 2019

PERMIT REVIEW STAMP

ISSUE HISTORY

No.	Date	Description
1	02/08/2019	ISSUE FOR PERMIT

REVISION HISTORY

No.	Date	Description

© 2015 These documents and their contents are the property of FUGLEBERG KOCH, PLLC - AA26002103, and are issued only for the specific project noted on these drawings. Any reproductions, revisions, or modifications of these documents without the expressed written consent of Fugleberg Koch, PLLC is prohibited by law.

FUGLEBERG KOCH
2555 Temple Trail, Winter Park, FL 32789 (407) 629-0595
www.fuglebergkoch.com BR569

CONSULTANT
Joseph, Lawrence & Co
Consulting Engineers
1180 HARWOOD AVE. SUITE 3000
ALTAMONTE SPRINGS, FLORIDA 32714
TEL: 321.972.4466
WWW.JLCENG.COM
CA NO. 28730

JLC 17.0137.00

ADAM J BARNEY
LICENSE
No. 69124
STATE OF FLORIDA
PROFESSIONAL ENGINEER

Adam Joseph Barney
P.E. #:69124

SUMMER BAY APTS. II
LAKE COUNTY, FL

Drawn:	MJR/KCM
Checked:	BLS/AJB
Approval:	BLS/AJB
Date:	02/08/2019
Project #:	5389

BUILDING TYPE 2 - LEVEL 3
PLAN - FIRE PROT.

FP3.03

REFERENCE NOTES: (X)

1. SPRINKLER RISER LOCATED WITHIN WALL.
2. STANDPIPE LOCATED WITHIN WALL.
3. 2½" FROM STANDPIPE CONNECT TO 2½" FIRE HOSE VALVE LOCATED WITHIN RECESSED FIRE HOSE VALVE CABINET.
4. ALTHOUGH NOT SHOWN, PROVIDE SPRINKLER COVERAGE FOR CORRIDORS.
5. STANDPIPE UP.

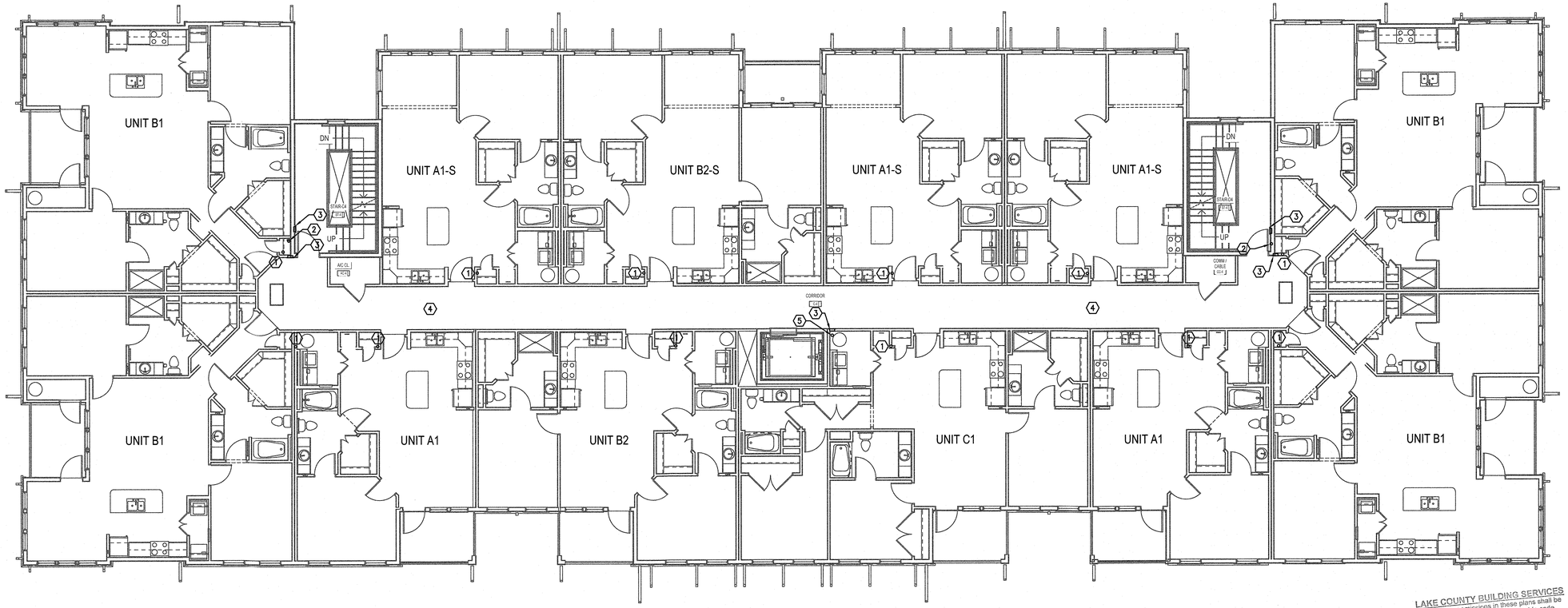

H1 BUILDING TYPE 2 - LEVEL 4 - FIRE PROTECTION
1/8" = 1'-0"

LAKE COUNTY BUILDING SERVICES
Any errors or omissions in these plans shall be made to conform with the applicable code requirements per Florida Building Code, in accordance with Section 107. Plans were reviewed for code compliance and shall be kept on job site.

RECEIVED FEB 14 2019

PERMIT REVIEW STAMP

ISSUE HISTORY

No.	Date	Description
1	02/08/2019	ISSUE FOR PERMIT

REVISION HISTORY

No.	Date	Description

FUGLEBERG KOCH
2555 Temple Trail, Winter Park, FL 32789 (407) 629-0595
www.fuglebergkoch.com BR569

CONSULTANT
Joseph, Lawrence & Co
Consulting Engineers
1180 HARWOOD AVE. SUITE 3000
ALTAMONTE SPRINGS, FLORIDA 32714
TEL: 321.972.4466
WWW.JLCENG.COM
CA NO. 28730

JLC 17.0137.00

ADAM J. BARNEY LICENSE No. 69124 STATE OF FLORIDA PROFESSIONAL ENGINEER

Adam Joseph Barney
P.E. #:69124

SUMMER BAY APTS. II
LAKE COUNTY, FL

Drawn:	MJR/KCM
Checked:	BLS/AJB
Approval:	BLS/AJB
Date:	02/08/2019
Project #:	5389

BUILDING TYPE 2 - LEVEL 4 PLAN - FIRE PROT.

FP3.04

© 2015 These documents and their contents are the property of FUGLEBERG KOCH, PLLC - AA26002100, and are issued only for the specific project noted on these drawings. Any reproductions, revisions, or modifications of these documents without the expressed written consent of Fugleberg Koch, PLLC is prohibited by law.

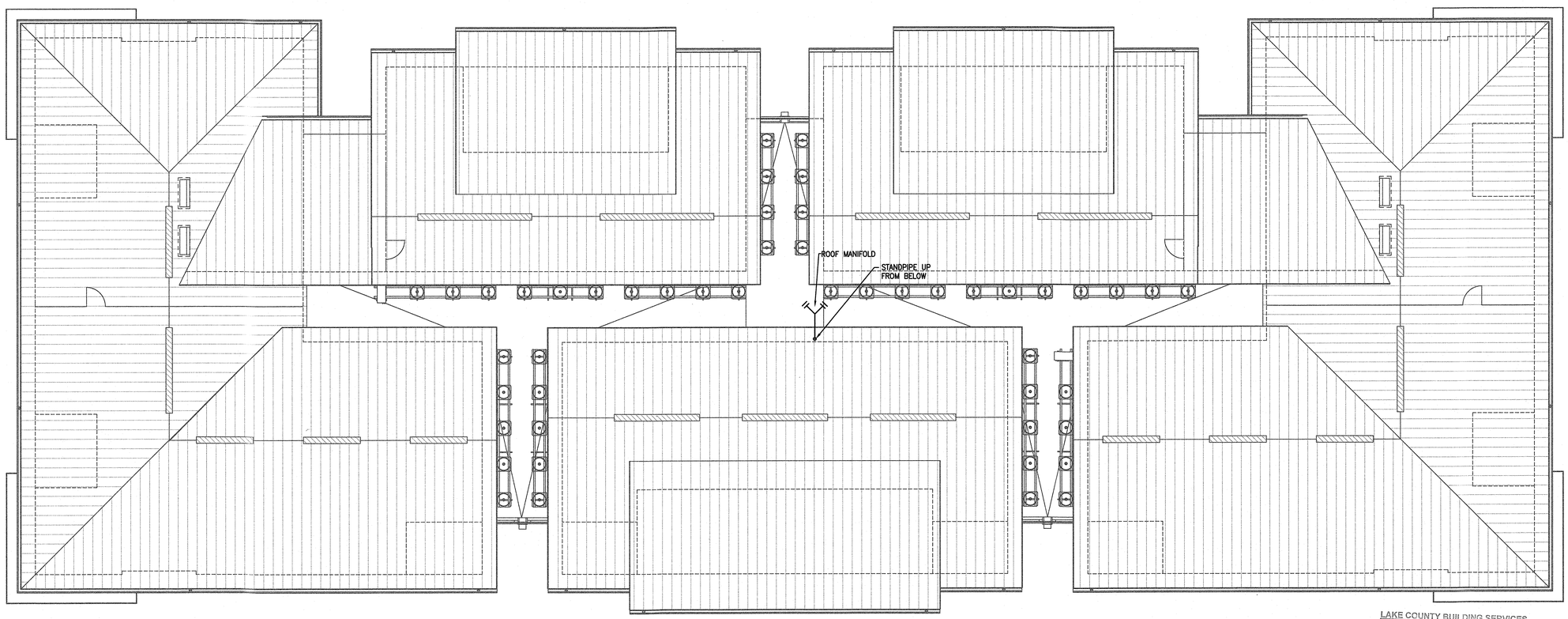

H1 BUILDING TYPE 2 - ROOF - FIRE PROTECTION
1/8" = 1'-0"

LAKE COUNTY BUILDING SERVICES
Any errors or omissions in these plans shall be made to conform with the applicable code requirements per Florida Building Code, in accordance with Section 107. Plans were reviewed for code compliance and shall be kept on job site.

RECEIVED FEB 14 2019

PERMIT REVIEW STAMP

ISSUE HISTORY

No.	Date	Description
1	02/08/2019	ISSUE FOR PERMIT

REVISION HISTORY

No.	Date	Description

FUGLEBERG KOCH
2555 Temple Trail, Winter Park, FL 32789 (407) 629-0595
www. fuglebergkoch.com BR569

CONSULTANT
Joseph, Lawrence & Co
Consulting Engineers
1180 HARWOOD AVE. SUITE 3000
ALTAMONTE SPRINGS, FLORIDA 32714
TEL: 321.972.4466
WWW.JLCENG.COM
CA NO. 28730

JLC 17.0137.00

ADAM J BARNEY
LICENSED
No. 69124
STATE OF FLORIDA
PROFESSIONAL ENGINEER

Adam Joseph Barney
P.E. #:69124

SUMMER BAY APTS. II
LAKE COUNTY, FL

Drawn:	MJR/KCM
Checked:	BLS/AJB
Approval:	BLS/AJB
Date:	02/08/2019
Project #:	5389

BUILDING TYPE 2 - ROOF - FIRE PROTECTION

FP3.05

© 2015 These documents and their contents are the property of FUGLEBERG KOCH, PLLC - AA26002103, and are issued only for the specific project noted on these drawings. Any reproductions, revisions, or modifications of these documents without the expressed written consent of Fugleberg Koch, PLLC is prohibited by law.

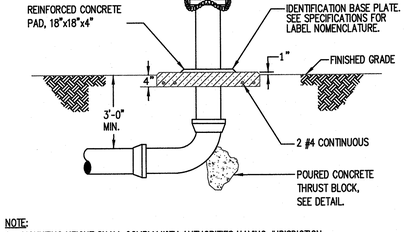

NOTE:
1. MOUNTING HEIGHT SHALL COMPLY WITH AUTHORITIES HAVING JURISDICTION.

5 NTS FREE STANDING VERTICAL FIRE DEPARTMENT CONNECTION DETAIL

GUIDE XHEZ
THROUGH-PENETRATION
FIRESTOP SYSTEMS

JANUARY 08, 1997
W-J-10345 - A CARD

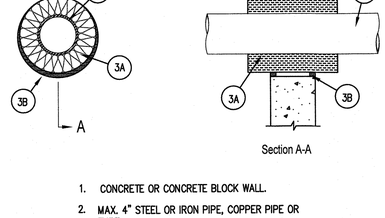

Section A-A

1. CONCRETE OR CONCRETE BLOCK WALL.
2. MAX. 4" STEEL OR IRON PIPE, COPPER PIPE OR TUBE.

3A. 2" THICK FIBERGLASS INSULATION (USED TO CREATE A BUFFER ZONE) EXTENDING A MINIMUM OF 2\" FROM EACH SURFACE OF THE WALL. ANNULUS RANGING FROM POINT CONTACT OF \" MAXIMUM.

3B. SPECSEAL SERIES 100 SEALANT INSTALLED TO 5/8"DEPTH, FLUSH WITH BOTH SURFACES OF THE WALL. AT POINT CONTACT, INSTALL A [" COVE BEAD OF SEALANT AT INSTULATION/ CONCRETE WALL INTERFACE.

4 NTS 2 HOUR FIRE WALL PENETRATION DETAIL

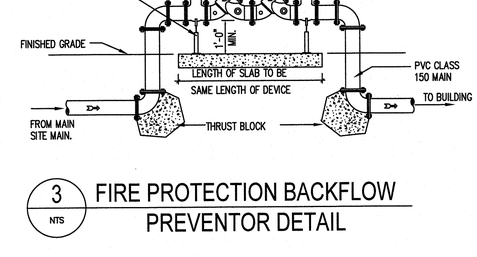

3 NTS FIRE PROTECTION BACKFLOW PREVENTOR DETAIL

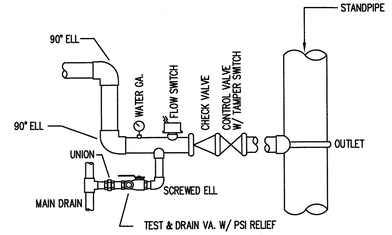

2 NTS SPRINKLER SYSTEM FLOOR CONTROL VALVE DETAIL (APARTMENTS)

NOTE: PAINT PIPING W/1 COAT PRIMER AND 2 COATS OR RED PAINT, SEMI-GLOSS.

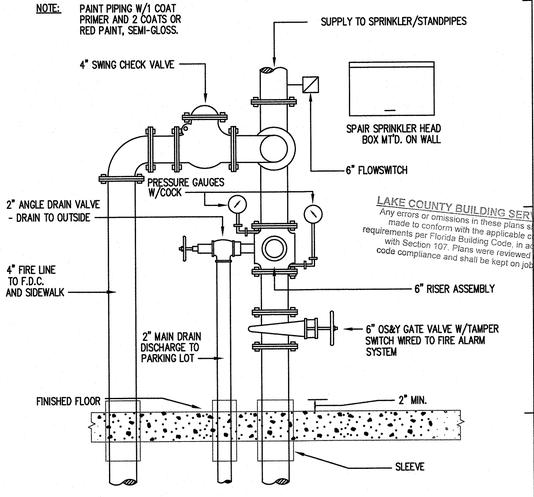

1 NTS FIRE SPRINKLER SUPPLY DETAIL (APARTMENTS)

RECEIVED FEB 1 & 2019

LAKE COUNTY BUILDING SERVICES
Any errors or omissions in these plans shall be made to conform with the applicable code requirements per Florida Building Code, in accordance with Section 107. Plans were reviewed for code compliance and shall be kept on job site.

PERMIT REVIEW STAMP

ISSUE HISTORY

No.	Date	Description
1	02/08/2019	ISSUE FOR PERMIT

REVISION HISTORY

No.	Date	Description

© 2015 These documents and their contents are the property of FUGLEBERG KOCH, PLLC. Any reproductions, revisions, or modifications of these documents without the expressed written consent of Fugleberg Koch, PLLC is prohibited by law.

FUGLEBERG KOCH
2555 Temple Trail, Winter Park, FL 32789 (407) 629-0595
www.fuglebergkoch.com BR569

CONSULTANT

Joseph, Lawrence & Co
Consulting Engineers
1180 HARWOOD AVE. SUITE 3000
ALTAMONTE SPRINGS, FLORIDA 32714
TEL: 321.972.4466
WWW.JLCENG.COM
CA NO. 28730

JLC 17.0137.00

ADAM J. BARNEY LICENSE No. 69124 STATE OF FLORIDA PROFESSIONAL ENGINEER

Adam Joseph Barney
P.E. #:69124

SUMMER BAY APTS. II
LAKE COUNTY, FL

Drawn:	MJR/KCM
Checked:	BLS/AJB
Approval:	BLS/AJB
Date:	02/08/2019
Project #:	5389

APARTMENT DETAILS- FIRE PROTECTION

FP4.01