STAIR NOTE

ALL STAIRS AND LANDINGS SHALL BE DESIGNED BY A SPECIALTY ENGINEER. PROVIDE SIGNED AND SEALED DRAWINGS FOR OUR REVIEW. THIS INCLUDES ALL ELEMENTS NECESSARY TO SUPPORT ALL LANDINGS. WOOD WALLS MAY BE BLOCKED FOR LANDING SUPPORT ATTACHMENTS LOCATIONS.

FOUNDATION PLAN NOTES:

1. EL 0'-0" IS FOR REFERENCE ONLY SEE CIVIL FOR TRUE NGVD ELEVATION.
2. TS INDICATES THICKENED SLAB AT STAIRS.
3. VERIFY STEPS AND SLOPES WITH ARCH'L DRAWINGS PRIOR TO CONSTRUCTION. SEE TYPICAL RECESS DETAIL.
4. SEE MECH'L, ELECTRICAL AND PLUMBING (MEP) DRAWINGS FOR LOCATION OF PVC SLEEVES. COORDINATE WITH HVAC CONTRACTOR.
5. MECH'L AND PLUMBING FIXTURES (DUCTS, SINKS, TOILETS AND TUBS) SHOWN ON THESE STRUCTURAL PLANS ARE FOR GENERAL LOCATION PURPOSES ONLY. TRUSS DESIGNER SHALL COORDINATE WITH ARCH'L AND MEP PLANS FOR EXACT LOCATIONS.
6. IF SHEAR WALL CALL OUT EXTENDS OVER AN OPENING, THE OPENING IS PART OF THE SHEARWALL HOLD DOWN ANCHORS ARE INSTALLED AT THE ENDS OF THE SHEARWALL CALLOUTS TYP.
7. SLAB ON GRADE AND FOUNDATIONS ARE TO BE DESIGNED BY A DELEGATED SPECIALTY ENGINEER UTILIZING A MINIMUM OF 4" CONC SLAB-ON-GRADE ON 10 MIL VAPOR BARRIER ON COMPACTED, TREATED SUB-SOIL (TYPICAL). EXTERIOR FOUNDATION EDGES SHALL BE MINIMUM 12" WIDE, AND CHAMPHORED BACK TO SLAB WITH A 45° SLOPE. EXTERIOR EDGES SHALL EXTEND A MINIMUM OF 18" BELOW TOP OF GRADE. ALL INTERIOR THICKENED SLABS BELOW WALLS SHALL BE A MINIMUM OF 12" THICK TYP.
8. UPLIFT FOOTING (NOT SHOWN FOR CLARITY) SHALL BE PROVIDED BELOW EACH END OF SHEAR WALLS PER THE SHEAR WALL SCHEDULE. THESE FOOTINGS ARE INDEPENDENT OF THE POST TENSIONS SYSTEM, AND ALL UPLIFT ANCHORS SHALL EXTEND THROUGH THE P.T. SLAB AND ATTACH TO THESE UPLIFT RESISTING FOUNDATIONS.
9. SLOPE SLAB 1/4" PER FOOT.
10. SLOPE SLAB 1/8" PER FOOT.

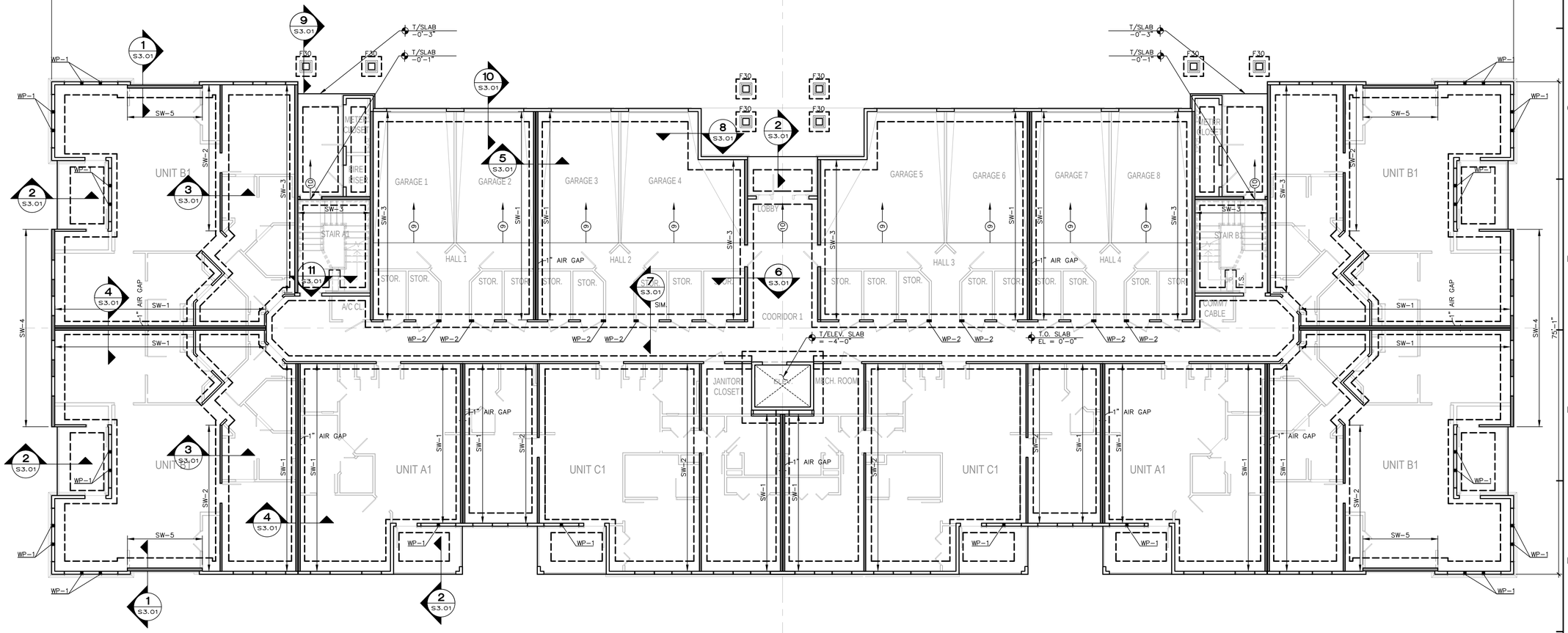

1 BUILDING TYPE 1 - FOUNDATION PLAN
1/8" = 1'-0"

U.S. DEPARTMENT OF HOUSING AND URBAN DEVELOPMENT

PERMIT REVIEW STAMP

ISSUE HISTORY

No.	Date	Description
1	07/21/17	DESIGN DEVELOPMENT
2	11/10/17	75%-90% REVIEW COORD. SET

REVISION HISTORY

No.	Date	Description

© 2017 These documents and their contents are the property of FUGLEBERG KOCH - AA26001103, and are issued only for the specific project noted on these drawings. Any misrepresentations, modifications of these documents without the expressed written consent of Fugleberg Koch, is prohibited by law.

FUGLEBERG KOCH
2555 Temple Trail, Winter Park, FL 32789 (407) 629-0595
www. fuglebergkoch.com AA26002103

CONSULTANT
GUTHERMAN STRUCTURAL INC.
150 CROWN OAK CENTRE DR.
LONGWOOD FL 32750
P: 407.701.0875 LIC. #28863
Gutherman STRUCTURAL
John Gutherman Jr., P.E.
FL. REG. #60880

SUMMER BAY APTS. II
LAKE COUNTY, FL

Drawn:	JRIVERA
Checked:	JGUTHERMAN
Approval:	JGUTHERMAN
Date:	Issue Date
Project #:	5389

BUILDING TYPE 1 FOUNDATION PLAN

S1.01

FLOOR FRAMING PLAN NOTES:

1. WOOD FLOOR TRUSS BEARING ELEVATIONS:
   2ND FLOOR (2ND), EL. = 9'-0 1/2"
   UNLESS NOTED OTHERWISE

2. ——— INDICATES WOOD FLOOR TRUSS, SEE PLANS.

   (1) DENOTES 18" DEEP UNIT WOOD FLOOR TRUSSES AT 24" O.C. W/ 23/32" PLYWOOD OR OSB T&G SHEATHING FASTENED W/ 10d RING SHANK NAILS AT 12" O.C. TYP. & GLUE W/ EXTERIOR RATED GLUE. INTERIOR FLOOR SHALL HAVE 3/4" GYP-CRETE TOPPING.

   (2) DENOTES SLOPED TOP CHORD WOOD BALCONY FRAMING, SLOPED @ 1/4" PER FOOT AT 24" O.C. W/ 23/32" PLYWOOD OR OSB T&G SHEATHING FASTENED W/ 10d RING SHANK NAILS AT 12" O.C. TYP. & GLUE W/ EXTERIOR RATED GLUE. PROVIDE NORMALWEIGHT 140 PCF TOPPING SLAB W/ FIBERMESH.

3. "FGT" INDICATES FLOOR GIRDER TRUSS. TRUSS MANUFACTURER'S ENGINEER TO PROVIDE DESIGN. WHERE WALLS SUPPORT GIRDER TRUSSES (FGT) PROVIDE (3) STUDS AT 1ST AND 2ND FLOOR AND (2) STUDS AT 3RD AND 4TH WALLS. PROVIDE SOLID BLOCKING IN TRUSS SPACE.

4. AT TRUSSES THAT RUN PARALLEL WITH SHEAR WALLS LOCATE TRUSS BOTTOM CHORD OVER DOUBLE TOP PLATE OF SHEAR WALL. TRUSS SHALL BE DESIGNED WITH VERTICALS AT 16" O.C. FOR SHEAR WALL SHEATHING ATTACHMENT. AT TRUSSES THAT RUN PERPENDICULAR TO SHEAR WALLS. PROVIDE SOLID 2x BLOCKING AT TOP AND BOTTOM CHORDS OF TRUSS. PROVIDE SHEAR WALL SHEATHING IN TRUSS SPACE. SHEATHING TO MATCH SHEATHING OF SHEAR WALL BELOW.

5. TRUSS MANUFACTURER'S ENGINEER SHALL DESIGN CORRIDOR FLOOR TRUSS SYSTEM FOR MECHANICAL RUNS. COORDINATE WITH MECHANICAL DRAWINGS.

6. SEE MECHANICAL, ELECTRICAL AND PLUMBING (MEP) DRAWINGS FOR LOCATION OF PVC SLEEVES, PLUMBING FIXTURES (SINKS, TOILETS AND TUBS), ELECTRICAL RUNS AND DUCT WORK. COORDINATE WITH TRUSS MANUFACTURER'S ENGINEER.

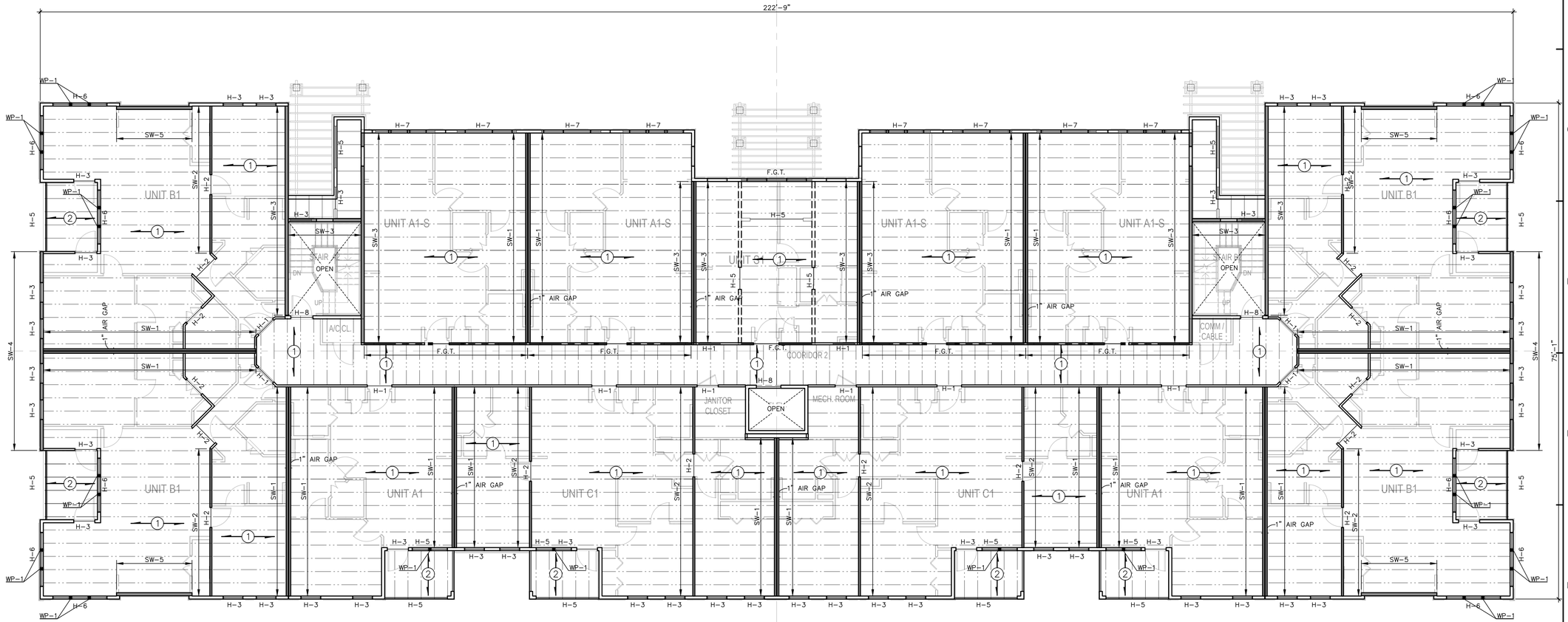

1 BUILDING TYPE 1 - LEVEL 2 FRMAING PLAN
1/8" = 1'-0"

U.S. DEPARTMENT OF HOUSING AND URBAN DEVELOPMENT

PERMIT REVIEW STAMP

ISSUE HISTORY

No.	Date	Description
1	07/21/17	DESIGN DEVELOPMENT
2	11/10/17	75%-90% REVIEW COORD. SET

REVISION HISTORY

No.	Date	Description

© 2017 These documents and their contents are the property of FUGLEBERG KOCH - AA26002103, and are issued only for the specific project noted on these drawings. Any reproductions, revisions, or modifications of these documents without the expressed written consent of Fugleberg Koch, is prohibited by law.

FUGLEBERG KOCH
2555 Temple Trail, Winter Park, FL 32789 (407) 629-0595
www.fuglebergkoch.com AA26002103

CONSULTANT
GUTHERMAN STRUCTURAL INC.
330 CROWN OAK CENTRE DR.
LONGWOOD FL 32750
P: 407.701.0875 LIC. #28863
Gutherman STRUCTURAL
John Gutherman Jr., P.E.
FL. REG. #60080

SUMMER BAY APTS. II
LAKE COUNTY, FL

Drawn:	JRIVERA
Checked:	JGUTHERMAN
Approval:	JGUTHERMAN
Date:	Issue Date
Project #:	5389

BUILDING TYPE 1 LEVEL 2 FRAMING PLAN

S1.02

FLOOR FRAMING PLAN NOTES:

1. WOOD FLOOR TRUSS BEARING ELEVATIONS:
   THIRD FLOOR (3RD), EL. = 19'-8 1/2"
   FOURTH FLOOR (4TH), EL. = 30'-4 1/2"
   UNLESS NOTED OTHERWISE

2. – – – – – – INDICATES WOOD FLOOR TRUSS, SEE PLANS.

   (1) DENOTES 18" DEEP UNIT WOOD FLOOR TRUSSES AT 24" O.C. W/ 23/32" PLYWOOD OR OSB T&G SHEATHING FASTENED W/ 10d RING SHANK NAILS AT 12" O.C. TYP. & GLUE W/ EXTERIOR RATED GLUE. INTERIOR FLOOR SHALL HAVE 3/4" GYP-CRETE TOPPING.

   (2) DENOTES SLOPED TOP CHORD WOOD BALCONY FRAMING, SLOPED @ 1/4" PER FOOT AT 24" O.C. W/ 23/32" PLYWOOD OR OSB T&G SHEATHING FASTENED W/ 10d RING SHANK NAILS AT 12" O.C. TYP. & GLUE W/ EXTERIOR RATED GLUE. PROVIDE NORMALWEIGHT 140 PCF TOPPING SLAB W/ FIBERMESH.

3. "FGT" INDICATES FLOOR GIRDER TRUSS. TRUSS MANUFACTURER'S ENGINEER TO PROVIDE DESIGN. WHERE WALLS SUPPORT GIRDER TRUSSES (FGT) PROVIDE (3) STUDS AT 1ST AND 2ND FLOOR AND (2) STUDS AT 3RD AND 4TH WALLS. PROVIDE SOLID BLOCKING IN TRUSS SPACE.

4. AT TRUSSES THAT RUN PARALLEL WITH SHEAR WALLS LOCATE TRUSS BOTTOM CHORD OVER DOUBLE TOP PLATE OF SHEAR WALL. TRUSS SHALL BE DESIGNED WITH VERTICALS AT 16" O.C. FOR SHEAR WALL SHEATHING ATTACHMENT. AT TRUSSES THAT RUN PERPENDICULAR TO SHEAR WALLS. PROVIDE SOLID 2x BLOCKING AT TOP AND BOTTOM CHORDS OF TRUSS. PROVIDE SHEAR WALL SHEATHING IN TRUSS SPACE. SHEATHING TO MATCH SHEATHING OF SHEAR WALL BELOW.

5. TRUSS MANUFACTURER'S ENGINEER SHALL DESIGN CORRIDOR FLOOR TRUSS SYSTEM FOR MECHANICAL RUNS. COORDINATE WITH MECHANICAL DRAWINGS.

6. SEE MECHANICAL, ELECTRICAL AND PLUMBING (MEP) DRAWINGS FOR LOCATION OF PVC SLEEVES, PLUMBING FIXTURES (SINKS, TOILETS AND TUBS), ELECTRICAL RUNS AND DUCT WORK. COORDINATE WITH TRUSS MANUFACTURER'S ENGINEER.

1 BUILDING TYPE 1 - LEVEL 3 FRAMING PLAN
1/8" = 1'-0"

U.S. DEPARTMENT OF HOUSING AND URBAN DEVELOPMENT

PERMIT REVIEW STAMP

ISSUE HISTORY

No.	Date	Description
1	07/21/17	DESIGN DEVELOPMENT
2	11/10/17	75%-90% REVIEW COORD. SET

REVISION HISTORY

No.	Date	Description

© 2017 These documents and their contents are the property of LISLEBERG KOCH - AA26002103, and are issued only for the specific project noted on these drawings. Any reproductions, revisions, or modifications of these documents without the expressed written consent of Fugleberg Koch, is prohibited by law.

FUGLEBERG KOCH
2555 Temple Trail, Winter Park, FL 32789 (407) 629-0595
www.fuglebergkoch.com AA26002103

CONSULTANT
GUTHERMAN STRUCTURAL INC.
330 CROWN OAK CENTRE DR.
LONGWOOD FL 32750
P: 407.701.0875 LIC. #28863
Gutherman STRUCTURAL
John Gutherman Jr., P.E.
FL. REG. #60880

SUMMER BAY APTS. II
LAKE COUNTY, FL

Drawn:	JRIVERA
Checked:	JGUTHERMAN
Approval:	JGUTHERMAN
Date:	Issue Date
Project #:	5389

BUILDING TYPE 1 - LEVEL 3 FRAMING PLAN

S1.03

FLOOR FRAMING PLAN NOTES:

1. WOOD FLOOR TRUSS BEARING ELEVATIONS:
   THIRD FLOOR (3RD), EL. = 19'-8 1/2"
   FOURTH FLOOR (4TH), EL. = 30'-4 1/2"
   UNLESS NOTED OTHERWISE

2. — — — — — INDICATES WOOD FLOOR TRUSS, SEE PLANS.

   (1) DENOTES 18" DEEP UNIT WOOD FLOOR TRUSSES AT 24" O.C. W/ 23/32" PLYWOOD OR OSB T&G SHEATHING FASTENED W/ 10d RING SHANK NAILS AT 12" O.C. TYP. & GLUE W/ EXTERIOR RATED GLUE. INTERIOR FLOOR SHALL HAVE 3/4" GYP-CRETE TOPPING.

   (2) DENOTES SLOPED TOP CHORD WOOD BALCONY FRAMING, SLOPED @ 1/4" PER FOOT AT 24" O.C. W/ 23/32" PLYWOOD OR OSB T&G SHEATHING FASTENED W/ 10d RING SHANK NAILS AT 12" O.C. TYP. & GLUE W/ EXTERIOR RATED GLUE. PROVIDE NORMALWEIGHT 140 PCF TOPPING SLAB W/ FIBERMESH.

3. "FGT" INDICATES FLOOR GIRDER TRUSS. TRUSS MANUFACTURER'S ENGINEER TO PROVIDE DESIGN. WHERE WALLS SUPPORT GIRDER TRUSSES (FGT) PROVIDE (3) STUDS AT 1ST AND 2ND FLOOR AND (2) STUDS AT 3RD AND 4TH WALLS. PROVIDE SOLID BLOCKING IN TRUSS SPACE.

4. AT TRUSSES THAT RUN PARALLEL WITH SHEAR WALLS LOCATE TRUSS BOTTOM CHORD OVER DOUBLE TOP PLATE OF SHEAR WALL. TRUSS SHALL BE DESIGNED WITH VERTICALS AT 16" O.C. FOR SHEAR WALL SHEATHING ATTACHMENT. AT TRUSSES THAT RUN PERPENDICULAR TO SHEAR WALLS, PROVIDE SOLID 2x BLOCKING AT TOP AND BOTTOM CHORDS OF TRUSS. PROVIDE SHEAR WALL SHEATHING IN TRUSS SPACE. SHEATHING TO MATCH SHEATHING OF SHEAR WALL BELOW.

5. TRUSS MANUFACTURER'S ENGINEER SHALL DESIGN CORRIDOR FLOOR TRUSS SYSTEM FOR MECHANICAL RUNS. COORDINATE WITH MECHANICAL DRAWINGS.

6. SEE MECHANICAL, ELECTRICAL AND PLUMBING (MEP) DRAWINGS FOR LOCATION OF PVC SLEEVES, PLUMBING FIXTURES (SINKS, TOILETS AND TUBS), ELECTRICAL RUNS AND DUCT WORK. COORDINATE WITH TRUSS MANUFACTURER'S ENGINEER.

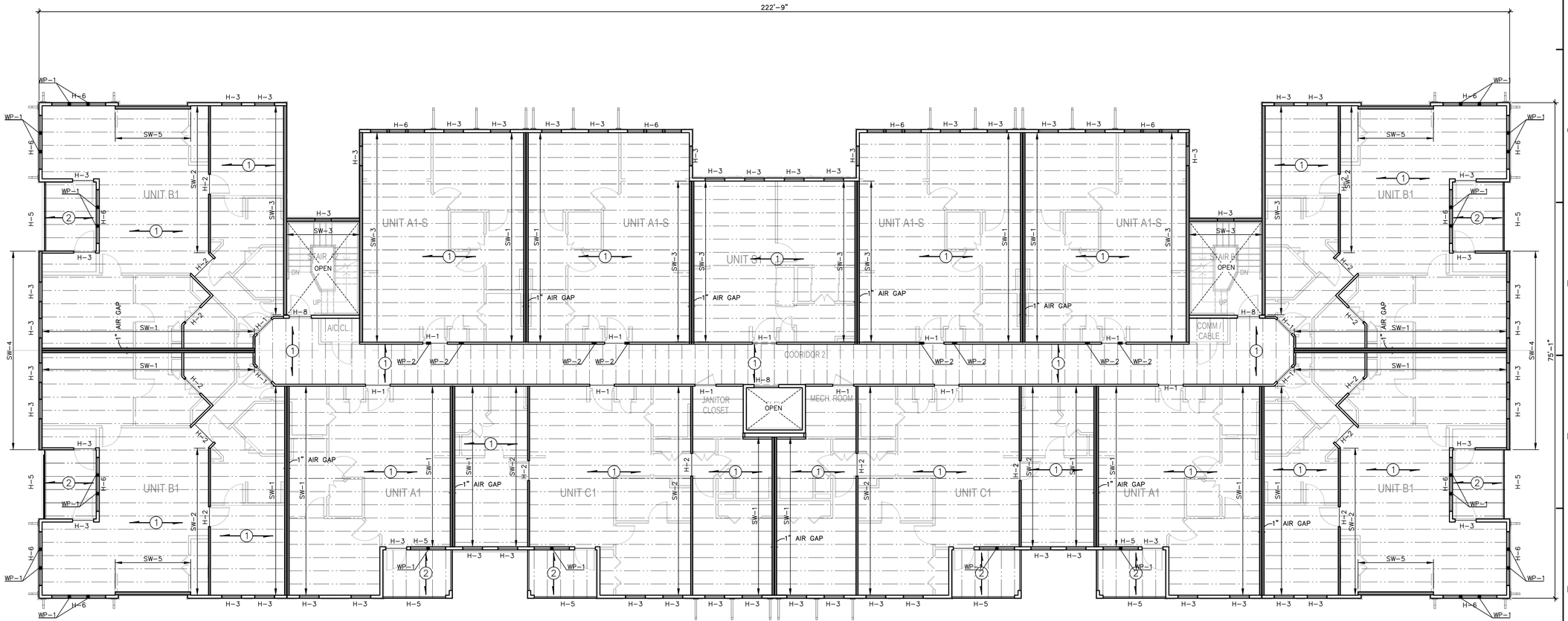

1 BUILDING TYPE 1 - LEVEL 4 FRAMING PLAN
1/8" = 1'-0"

U.S. DEPARTMENT OF HOUSING AND URBAN DEVELOPMENT

PERMIT REVIEW STAMP

ISSUE HISTORY

No.	Date	Description
1	07/21/17	DESIGN DEVELOPMENT
2	11/10/17	75%-90% REVIEW COORD. SET

REVISION HISTORY

No.	Date	Description

© 2017 These documents and their contents are the property of FUGLEBERG KOCH - AA26002103, and are issued only for the specific project noted on these drawings. Any reproductions, revisions, or modifications of these documents without the expressed written consent of Fugleberg Koch, is prohibited by law.

FUGLEBERG KOCH
2555 Temple Trail, Winter Park, FL 32789 (407) 629-0595
www. fuglebergkoch.com AA26002103

CONSULTANT
GUTHERMAN STRUCTURAL INC.
130 CROWN OAK CENTRE DR.
LONGWOOD FL 32750
P: 407.701.0875 LIC. #28863
Gutherman STRUCTURAL
John Gutherman Jr., P.E.
FL. REG. #60880

SUMMER BAY APTS. II
LAKE COUNTY, FL

Drawn:	JR/VERA
Checked:	JGUTHERMAN
Approval:	JGUTHERMAN
Date:	Issue Date
Project #:	5389

BUILDING TYPE 1 - LEVEL 4 FRAMING PLAN

S1.04

ROOF FRAMING NOTES:

1. TRUSS BEARING ELEVATION IS +41'-1" U.N.O.
2. ROOF WOOD TRUSSES SHALL BE SPACED 2'-0" O.C. MAX.
3. G.T. INDICATES ROOF GIRDER TRUSS BY TRUSS MANUFACTURER.
4. H-# INDICATES WOOD HEADER, SEE SCHEDULE ON SHEET S2.02.
5. ROOF SHEATHING SHALL BE 15/32" O.S.B. SHEATHING. ATTACH SHEATHING WITH 8d NAILS AT 6" O.C. AT EDGES AND 12" O.C. AT ALL OTHER SUPPORTS.
6. RUNS FOR MECH'L, ELECTRICAL AND PLUMBING (MEP) THROUGH PRE-FABRICATED TRUSSES MUST BE COORDINATED WITH THE TRUSS DESIGNER AND MEP DWGS. (PIPING, DUCT RUNS, ETC.) FIRE SRPINKLER RUNS MUST ALSO BE COORDINATED.
7. FRAMING CONTRACTOR AND HVAC CONTRACTOR TO COORDINATE DUCT LOCATIONS PRIOR TO TRUSS FABRICATION.
8. ALL TRUSS UPLIFT CONNECTORS SHALL BE (B) U.N.O.
9. PROVIDE SIMPSON LGT2 TYP. FOR ALL G.T. UPLIFT CONNECTIONS WITH (3) STUDS BELOW TO GROUND, TYP..

"SIMPSON" TRUSS TIE DOWN (U.N.O.)

MARK	ANCHOR TYPE	NAILS TO TRUSS	NAILS TO PLATE	NAILS TO STUD	BOLTS	ALLOWABLE UPLIFT	LATERAL LOAD PARALLEL TO WALL	LATERAL LOAD PERPEND. TO WALL
(A)	H2.5A	5-8d	5-8d	5-8d	-	600 #	110 #	110 #
(B)	H10A**	9-10dx1 1/2"	9-10dx1 1/2"	9-10dx1 1/2"	-	1340 #	590 #	285 #
(C)	H16 / 16-2	2-10dx1 1/2"	10-10dx1 1/2"	9-10dx1 1/2"	-	1340 #	590 #	285 #
(D)	MGT	22-10d	-	-	5/8"ø	3965 #	-	-
(E)	LGT3-SDS2.5 *WHEN G.T. IS ABOVE HEADER, PROVIDE AN ST2215 AT EACH SIDE OF HEADER TO BEARING STUDS. PROVIDE (2) CS18 ACROSS FLOORS AND AN HDU2 AT FOUNDATION FOR EACH SIDE	12-SDS x 2 1/2"	26-16d	26-16d	-	9715 # MIN	-	-
(F)	H7Z	4-8d	2-8d	8-8d	-	985 #	400 #	-

**WHEN CONNECTOR (B) DOES NOT FIT DUE TO TRUSS PRESS PLATE INTERFERENCE, SUBSTITUTE (C) CONNECTOR

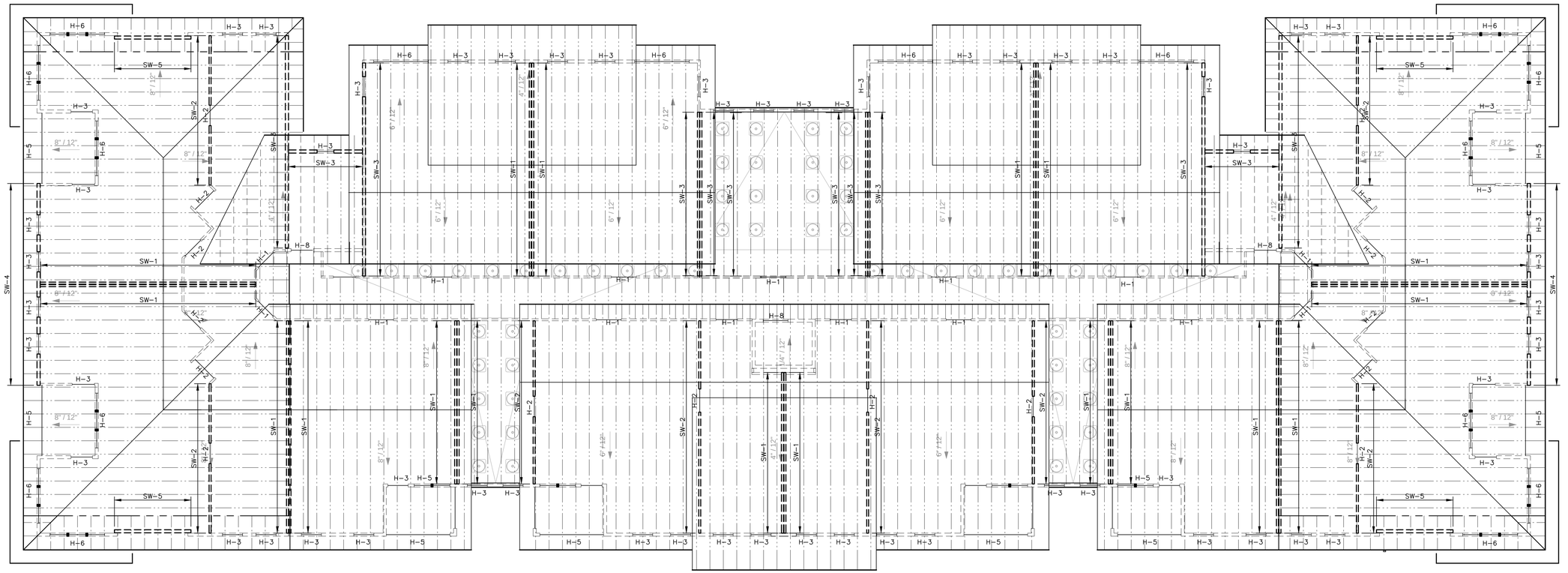

1 BUILDING TYPE 1 - ROOF FRAMING PLAN
1/8" = 1'-0"

U.S. DEPARTMENT OF HOUSING AND URBAN DEVELOPMENT

PERMIT REVIEW STAMP

ISSUE HISTORY

No.	Date	Description
1	07/21/17	DESIGN DEVELOPMENT
2	11/10/17	75%-90% REVIEW COORD. SET

REVISION HISTORY

No.	Date	Description

© 2017 These documents and their contents are the property of FUGLEBERG KOCH - AA26002103, and are issued only for the specific project noted on these drawings. Any reproductions, revisions, or modifications of these documents without the expressed written consent of Fugleberg Koch, is prohibited by law.

FUGLEBERG KOCH
2555 Temple Trail, Winter Park, FL 32789 (407) 629-0595
www.fuglebergkoch.com AA26002103

CONSULTANT
GUTHERMAN STRUCTURAL INC.
330 CROWN OAK CENTRE DR.
LONGWOOD FL 32750
P: 407.701.0875 LIC. #28863
Gutherman STRUCTURAL
John Gutherman Jr., P.E.
FL. REG. #60080

SUMMER BAY APTS. II
LAKE COUNTY, FL

Drawn:	JRIVERA
Checked:	JGUTHERMAN
Approval:	JGUTHERMAN
Date:	Issue Date
Project #:	5389

BUILDING TYPE 1 ROOF FRAMING PLAN

S1.05

STAIR NOTE

ALL STAIRS AND LANDINGS SHALL BE DESIGNED BY A SPECIALTY ENGINEER. PROVIDE SIGNED AND SEALED DRAWINGS FOR OUR REVIEW. THIS INCLUDES ALL ELEMENTS NECESSARY TO SUPPORT ALL LANDINGS. WOOD WALLS MAY BE BLOCKED FOR LANDING SUPPORT ATTACHMENTS LOCATIONS.

FOUNDATION PLAN NOTES:

1. EL 0'-0" IS FOR REFERENCE ONLY SEE CIVIL FOR TRUE NGVD ELEVATION.
2. TS INDICATES THICKENED SLAB AT STAIRS.
3. VERIFY STEPS AND SLOPES WITH ARCH'L DRAWINGS PRIOR TO CONSTRUCTION. SEE TYPICAL RECESS DETAIL.
4. SEE MECH'L, ELECTRICAL AND PLUMBING (MEP) DRAWINGS FOR LOCATION OF PVC SLEEVES. COORDINATE WITH HVAC CONTRACTOR.
5. MECH'L AND PLUMBING FIXTURES (DUCTS, SINKS, TOILETS AND TUBS) SHOWN ON THESE STRUCTURAL PLANS ARE FOR GENERAL LOCATION PURPOSES ONLY. TRUSS DESIGNER SHALL COORDINATE WITH ARCH'L AND MEP PLANS FOR EXACT LOCATIONS.
6. IF SHEAR WALL CALL OUT EXTENDS OVER AN OPENING, THE OPENING IS PART OF THE SHEARWALL HOLD DOWN ANCHORS ARE INSTALLED AT THE ENDS OF THE SHEARWALL CALLOUTS TYP.
7. SLAB ON GRADE AND FOUNDATIONS ARE TO BE DESIGNED BY A DELEGATED SPECIALTY ENGINEER UTILIZING A MINIMUM OF 4" CONC SLAB-ON-GRADE ON 10 MIL VAPOR BARRIER ON COMPACTED, TREATED SUB-SOIL (TYPICAL). EXTERIOR FOUNDATION EDGES SHALL BE MINIMUM 12" WIDE, AND CHAMPHORED BACK TO SLAB WITH A 45° SLOPE. EXTERIOR EDGES SHALL EXTEND A MINIMUM OF 18" BELOW TOP OF GRADE. ALL INTERIOR THICKENED SLABS BELOW WALLS SHALL BE A MINIMUM OF 12" THICK TYP.
8. UPLIFT FOOTING (NOT SHOWN FOR CLARITY) SHALL BE PROVIDED BELOW EACH END OF SHEAR WALLS PER THE SHEAR WALL SCHEDULE. THESE FOOTINGS ARE INDEPENDENT OF THE POST TENSIONS SYSTEM, AND ALL UPLIFT ANCHORS SHALL EXTEND THROUGH THE P.T. SLAB AND ATTACH TO THESE UPLIFT RESISTING FOUNDATIONS.

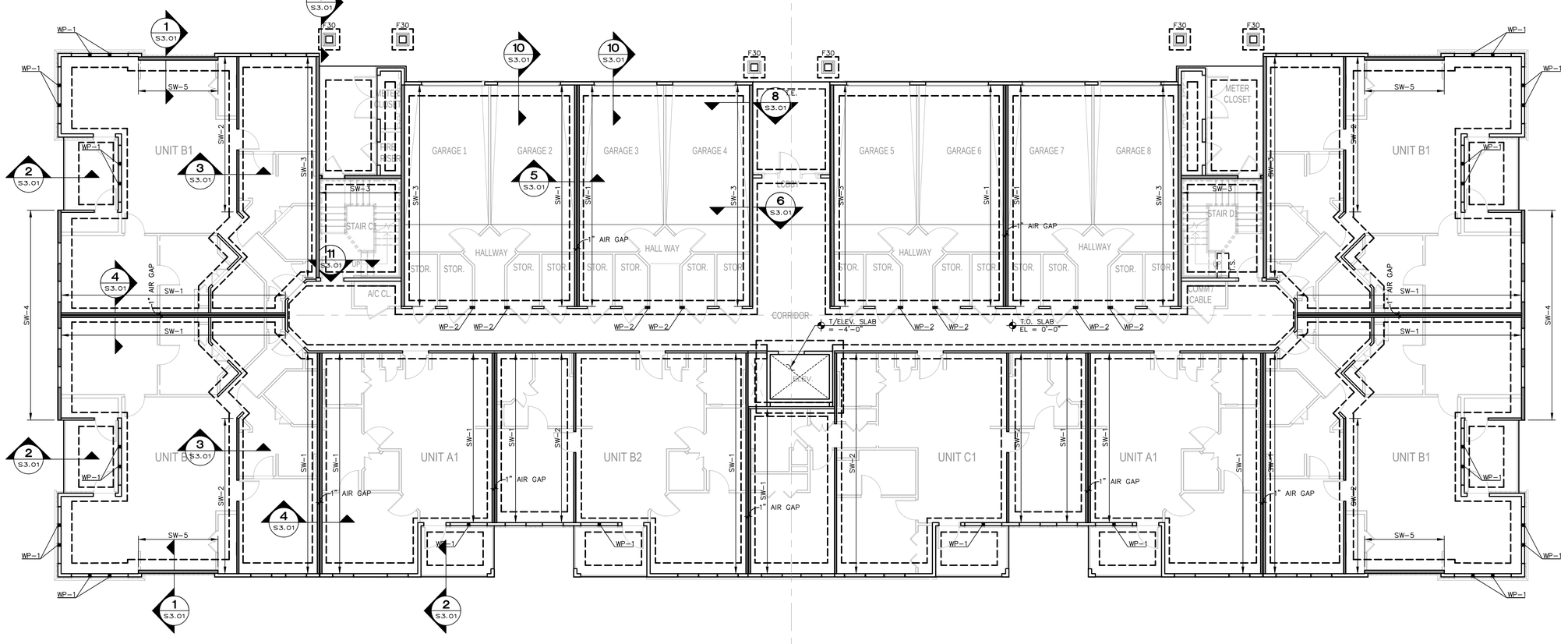

1 BUILDING TYPE 2 - FOUNDATION PLAN
1/8" = 1'-0"

U.S. DEPARTMENT OF HOUSING AND URBAN DEVELOPMENT

PERMIT REVIEW STAMP

ISSUE HISTORY

No.	Date	Description
1	07/21/17	DESIGN DEVELOPMENT
2	11/10/17	75%-90% REVIEW COORD. SET

REVISION HISTORY

No.	Date	Description

FUGLEBERG KOCH
2555 Temple Trail, Winter Park, FL 32789 (407) 629-0595
www. fuglebergkoch.com AA26002103

CONSULTANT

GUTHERMAN STRUCTURAL INC.
130 CROWN OAK CENTRE DR.
LONGWOOD FL 32750
P: 407.701.0875 LIC. #28863
Gutherman STRUCTURAL
John Gutherman Jr., P.E.
FL. REG. #60880

SUMMER BAY APTS. II
LAKE COUNTY, FL

Drawn:	JRIVERA
Checked:	JGUTHERMAN
Approval:	JGUTHERMAN
Date:	Issue Date
Project #:	5389

BUILDING TYPE 2 FOUNDATION PLAN

S1.06

© 2017 These documents and their contents are the property of FUGLEBERG KOCH - AA26002103, and are issued only for the specific project noted on these drawings. Any reproductions, revisions, or modifications of these documents without the expressed written consent of Fugleberg Koch, is prohibited by law.

FLOOR FRAMING PLAN NOTES:

1. WOOD FLOOR TRUSS BEARING ELEVATIONS:
   2ND FLOOR (2ND), EL. = 9'-0 1/2"
   UNLESS NOTED OTHERWISE

2. ——— INDICATES WOOD FLOOR TRUSS, SEE PLANS.

   (1) DENOTES 18" DEEP UNIT WOOD FLOOR TRUSSES AT 24" O.C. W/ 23/32" PLYWOOD OR OSB T&G SHEATHING FASTENED W/ 10d RING SHANK NAILS AT 12" O.C. TYP. & GLUE W/ EXTERIOR RATED GLUE. INTERIOR FLOOR SHALL HAVE 3/4" GYP-CRETE TOPPING.

   (2) DENOTES SLOPED TOP CHORD WOOD BALCONY FRAMING, SLOPED @ 1/4" PER FOOT AT 24" O.C. W/ 23/32" PLYWOOD OR OSB T&G SHEATHING FASTENED W/ 10d RING SHANK NAILS AT 12" O.C. TYP. & GLUE W/ EXTERIOR RATED GLUE. PROVIDE NORMALWEIGHT 140 PCF TOPPING SLAB W/ FIBERMESH.

3. "FGT" INDICATES FLOOR GIRDER TRUSS. TRUSS MANUFACTURER'S ENGINEER TO PROVIDE DESIGN. WHERE WALLS SUPPORT GIRDER TRUSSES (FGT) PROVIDE (3) STUDS AT 1ST AND 2ND FLOOR AND (2) STUDS AT 3RD AND 4TH WALLS. PROVIDE SOLID BLOCKING IN TRUSS SPACE.

4. AT TRUSSES THAT RUN PARALLEL WITH SHEAR WALLS LOCATE TRUSS BOTTOM CHORD OVER DOUBLE TOP PLATE OF SHEAR WALL. TRUSS SHALL BE DESIGNED WITH VERTICALS AT 16" O.C. FOR SHEAR WALL SHEATHING ATTACHMENT. AT TRUSSES THAT RUN PERPENDICULAR TO SHEAR WALLS. PROVIDE SOLID 2x BLOCKING AT TOP AND BOTTOM CHORDS OF TRUSS. PROVIDE SHEAR WALL SHEATHING IN TRUSS SPACE. SHEATHING TO MATCH SHEATHING OF SHEAR WALL BELOW.

5. TRUSS MANUFACTURER'S ENGINEER SHALL DESIGN CORRIDOR FLOOR TRUSS SYSTEM FOR MECHANICAL RUNS. COORDINATE WITH MECHANICAL DRAWINGS.

6. SEE MECHANICAL, ELECTRICAL AND PLUMBING (MEP) DRAWINGS FOR LOCATION OF PVC SLEEVES, PLUMBING FIXTURES (SINKS, TOILETS AND TUBS), ELECTRICAL RUNS AND DUCT WORK. COORDINATE WITH TRUSS MANUFACTURER'S ENGINEER.

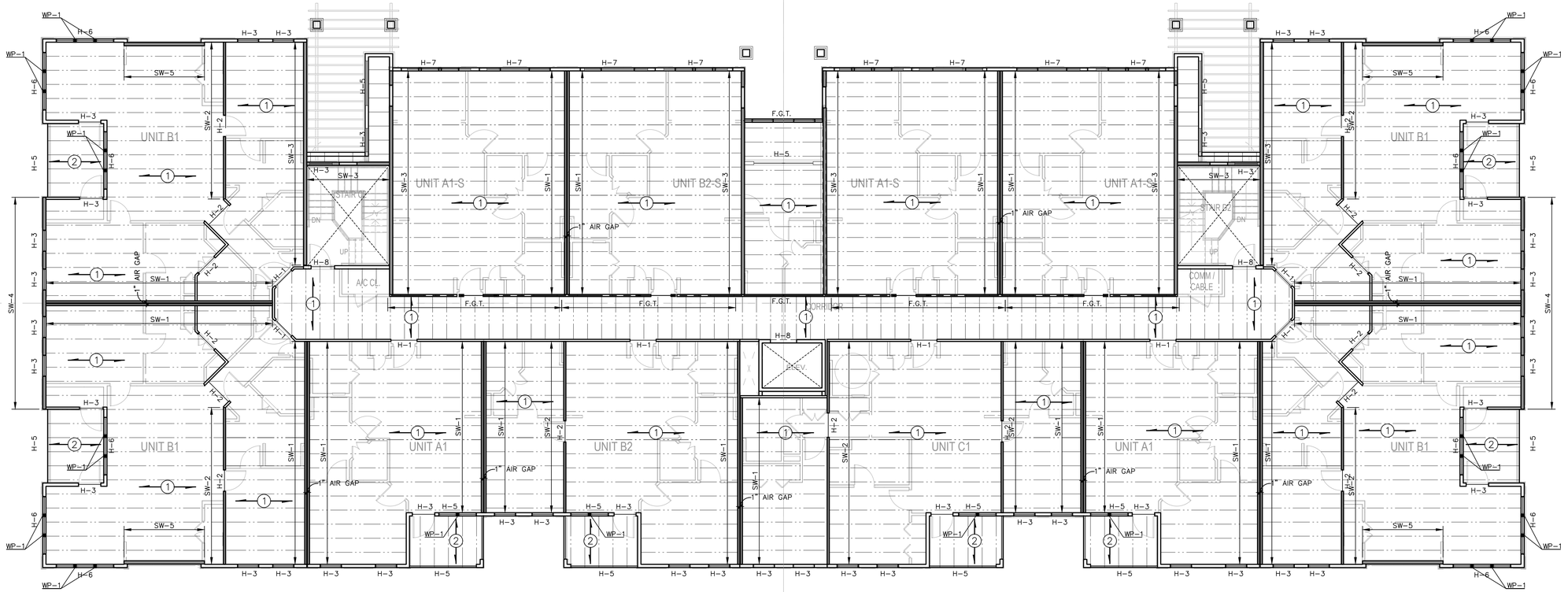

1 BUILDING TYPE 2 - LEVEL 2 FRMAING PLAN
1/8" = 1'-0"

U.S. DEPARTMENT OF HOUSING AND URBAN DEVELOPMENT

PERMIT REVIEW STAMP

ISSUE HISTORY

No.	Date	Description
1	07/21/17	DESIGN DEVELOPMENT
2	11/10/17	75%-90% REVIEW COORD. SET

REVISION HISTORY

No.	Date	Description

© 2017 These documents and their contents are the property of FUGLEBERG KOCH - AA26002103, and are issued only for the specific project noted on these drawings. Any reproductions, revisions, or modifications of these documents without the expressed written consent of Fugleberg Koch, is prohibited by law.

FUGLEBERG KOCH
2555 Temple Trail, Winter Park, FL 32789 (407) 629-0595
www.fuglebergkoch.com AA26002103

CONSULTANT
GUTHERMAN STRUCTURAL INC.
330 CROWN OAK CENTRE DR.
LONGWOOD FL 32750
P: 407.701.0875 LIC. #28863
Gutherman STRUCTURAL
John Gutherman Jr., P.E.
FL. REG. #60080

SUMMER BAY APTS. II
LAKE COUNTY, FL

Drawn:	JRIVERA
Checked:	JGUTHERMAN
Approval:	JGUTHERMAN
Date:	Issue Date
Project #:	5389

BUILDING TYPE 2 LEVEL 2 FRAMING PLAN

S1.07

FLOOR FRAMING PLAN NOTES:

1. WOOD FLOOR TRUSS BEARING ELEVATIONS:
   THIRD FLOOR (3RD), EL. = 19'-8 1/2"
   FOURTH FLOOR (4TH), EL. = 30'-4 1/2"
   UNLESS NOTED OTHERWISE

2. INDICATES WOOD FLOOR TRUSS, SEE PLANS.

   (1) DENOTES 18" DEEP UNIT WOOD FLOOR TRUSSES AT 24" O.C. W/ 23/32" PLYWOOD OR OSB T&G SHEATHING FASTENED W/ 10d RING SHANK NAILS AT 12" O.C. TYP. & GLUE W/ EXTERIOR RATED GLUE. INTERIOR FLOOR SHALL HAVE 3/4" GYP-CRETE TOPPING.

   (2) DENOTES SLOPED TOP CHORD WOOD BALCONY FRAMING, SLOPED @ 1/4" PER FOOT AT 24" O.C. W/ 23/32" PLYWOOD OR OSB T&G SHEATHING FASTENED W/ 10d RING SHANK NAILS AT 12" O.C. TYP. & GLUE W/ EXTERIOR RATED GLUE. PROVIDE NORMALWEIGHT 140 PCF TOPPING SLAB W/ FIBERMESH.

3. "FGT" INDICATES FLOOR GIRDER TRUSS. TRUSS MANUFACTURER'S ENGINEER TO PROVIDE DESIGN. WHERE WALLS SUPPORT GIRDER TRUSSES (FGT) PROVIDE (3) STUDS AT 1ST AND 2ND FLOOR AND (2) STUDS AT 3RD AND 4TH WALLS. PROVIDE SOLID BLOCKING IN TRUSS SPACE.

4. AT TRUSSES THAT RUN PARALLEL WITH SHEAR WALLS LOCATE TRUSS BOTTOM CHORD OVER DOUBLE TOP PLATE OF SHEAR WALL. TRUSS SHALL BE DESIGNED WITH VERTICALS AT 16" O.C. FOR SHEAR WALL SHEATHING ATTACHMENT. AT TRUSSES THAT RUN PERPENDICULAR TO SHEAR WALLS. PROVIDE SOLID 2x BLOCKING AT TOP AND BOTTOM CHORDS OF TRUSS. PROVIDE SHEAR WALL SHEATHING IN TRUSS SPACE. SHEATHING TO MATCH SHEATHING OF SHEAR WALL BELOW.

5. TRUSS MANUFACTURER'S ENGINEER SHALL DESIGN CORRIDOR FLOOR TRUSS SYSTEM FOR MECHANICAL RUNS. COORDINATE WITH MECHANICAL DRAWINGS.

6. SEE MECHANICAL, ELECTRICAL AND PLUMBING (MEP) DRAWINGS FOR LOCATION OF PVC SLEEVES, PLUMBING FIXTURES (SINKS, TOILETS AND TUBS), ELECTRICAL RUNS AND DUCT WORK. COORDINATE WITH TRUSS MANUFACTURER'S ENGINEER.

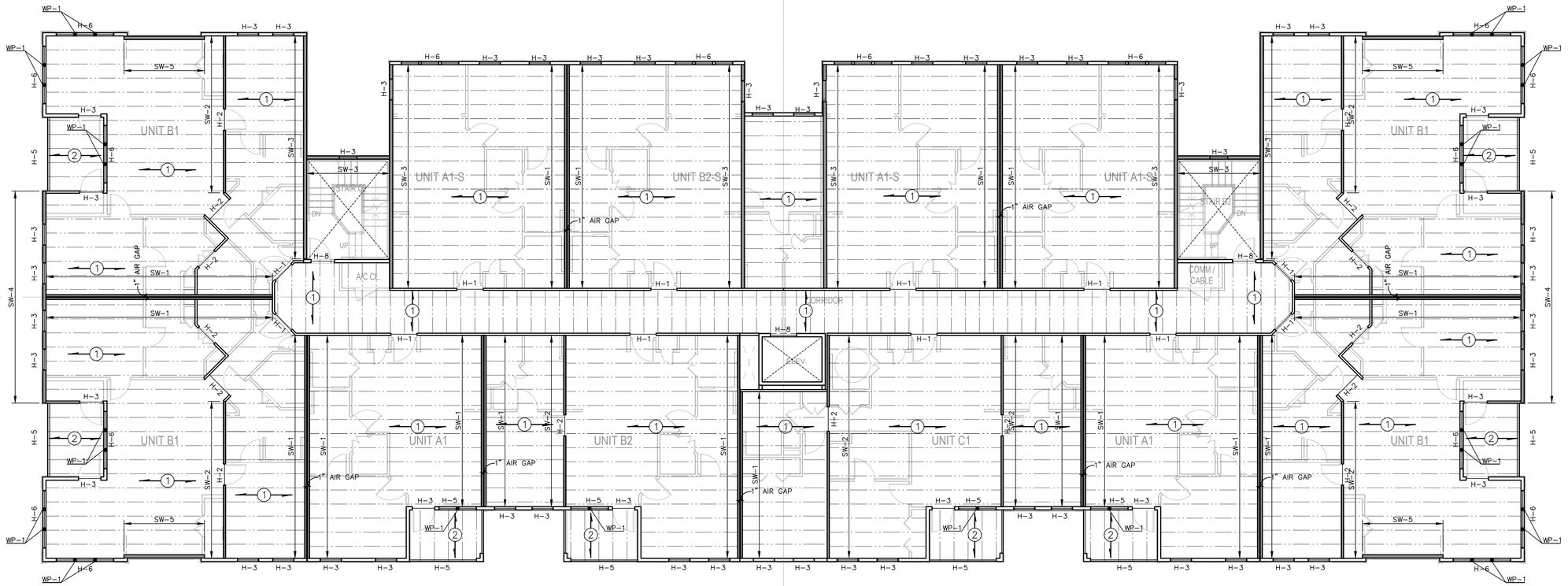

1 BUILDING TYPE 2 - LEVEL 3 FRAMING PLAN
1/8" = 1'-0"

U.S. DEPARTMENT OF HOUSING AND URBAN DEVELOPMENT

PERMIT REVIEW STAMP

ISSUE HISTORY

No.	Date	Description
1	07/21/17	DESIGN DEVELOPMENT
2	11/10/17	75%-90% REVIEW COORD. SET

REVISION HISTORY

No.	Date	Description

© 2017 These documents and their contents are the property of FUGLEBERG KOCH - AA26002103, and are issued only for the specific project noted on these drawings. Any reproductions, revisions, or modifications of these documents without the expressed written consent of Fugleberg Koch, is prohibited by law.

FUGLEBERG KOCH
2555 Temple Trail, Winter Park, FL 32789 (407) 629-0595
www.fuglebergkoch.com AA26002103

CONSULTANT

GUTHERMAN STRUCTURAL INC.
330 CROWN OAK CENTRE DR.
LONGWOOD FL 32750
P: 407.701.0875 LIC. #28863
Gutherman STRUCTURAL
John Gutherman Jr., P.E.
FL. REG. #60080

SUMMER BAY APTS. II
LAKE COUNTY, FL

Drawn:	JRIVERA
Checked:	JGUTHERMAN
Approval:	JGUTHERMAN
Date:	Issue Date
Project #:	5389

BUILDING TYPE 2 - LEVEL 3 FRAMING PLAN

S1.08

FLOOR FRAMING PLAN NOTES:

1. WOOD FLOOR TRUSS BEARING ELEVATIONS:
   THIRD FLOOR (3RD), EL. = 19'-8 1/2"
   FOURTH FLOOR (4TH), EL. = 30'-4 1/2"
   UNLESS NOTED OTHERWISE

2. INDICATES WOOD FLOOR TRUSS, SEE PLANS.

   (1) DENOTES 18" DEEP UNIT WOOD FLOOR TRUSSES AT 24" O.C. W/ 23/32" PLYWOOD OR OSB T&G SHEATHING FASTENED W/ 10d RING SHANK NAILS AT 12" O.C. TYP. & GLUE W/ EXTERIOR RATED GLUE. INTERIOR FLOOR SHALL HAVE 3/4" GYP-CRETE TOPPING.

   (2) DENOTES SLOPED TOP CHORD WOOD BALCONY FRAMING, SLOPED @ 1/4" PER FOOT AT 24" O.C. W/ 23/32" PLYWOOD OR OSB T&G SHEATHING FASTENED W/ 10d RING SHANK NAILS AT 12" O.C. TYP. & GLUE W/ EXTERIOR RATED GLUE. PROVIDE NORMALWEIGHT 140 PCF TOPPING SLAB W/ FIBERMESH.

3. "FGT" INDICATES FLOOR GIRDER TRUSS. TRUSS MANUFACTURER'S ENGINEER TO PROVIDE DESIGN. WHERE WALLS SUPPORT GIRDER TRUSSES (FGT) PROVIDE (3) STUDS AT 1ST AND 2ND FLOOR AND (2) STUDS AT 3RD AND 4TH WALLS. PROVIDE SOLID BLOCKING IN TRUSS SPACE.

4. AT TRUSSES THAT RUN PARALLEL WITH SHEAR WALLS LOCATE TRUSS BOTTOM CHORD OVER DOUBLE TOP PLATE OF SHEAR WALL. TRUSS SHALL BE DESIGNED WITH VERTICALS AT 16" O.C. FOR SHEAR WALL SHEATHING ATTACHMENT. AT TRUSSES THAT RUN PERPENDICULAR TO SHEAR WALLS. PROVIDE SOLID 2x BLOCKING AT TOP AND BOTTOM CHORDS OF TRUSS. PROVIDE SHEAR WALL SHEATHING IN TRUSS SPACE. SHEATHING TO MATCH SHEATHING OF SHEAR WALL BELOW.

5. TRUSS MANUFACTURER'S ENGINEER SHALL DESIGN CORRIDOR FLOOR TRUSS SYSTEM FOR MECHANICAL RUNS. COORDINATE WITH MECHANICAL DRAWINGS.

6. SEE MECHANICAL, ELECTRICAL AND PLUMBING (MEP) DRAWINGS FOR LOCATION OF PVC SLEEVES, PLUMBING FIXTURES (SINKS, TOILETS AND TUBS), ELECTRICAL RUNS AND DUCT WORK. COORDINATE WITH TRUSS MANUFACTURER'S ENGINEER.

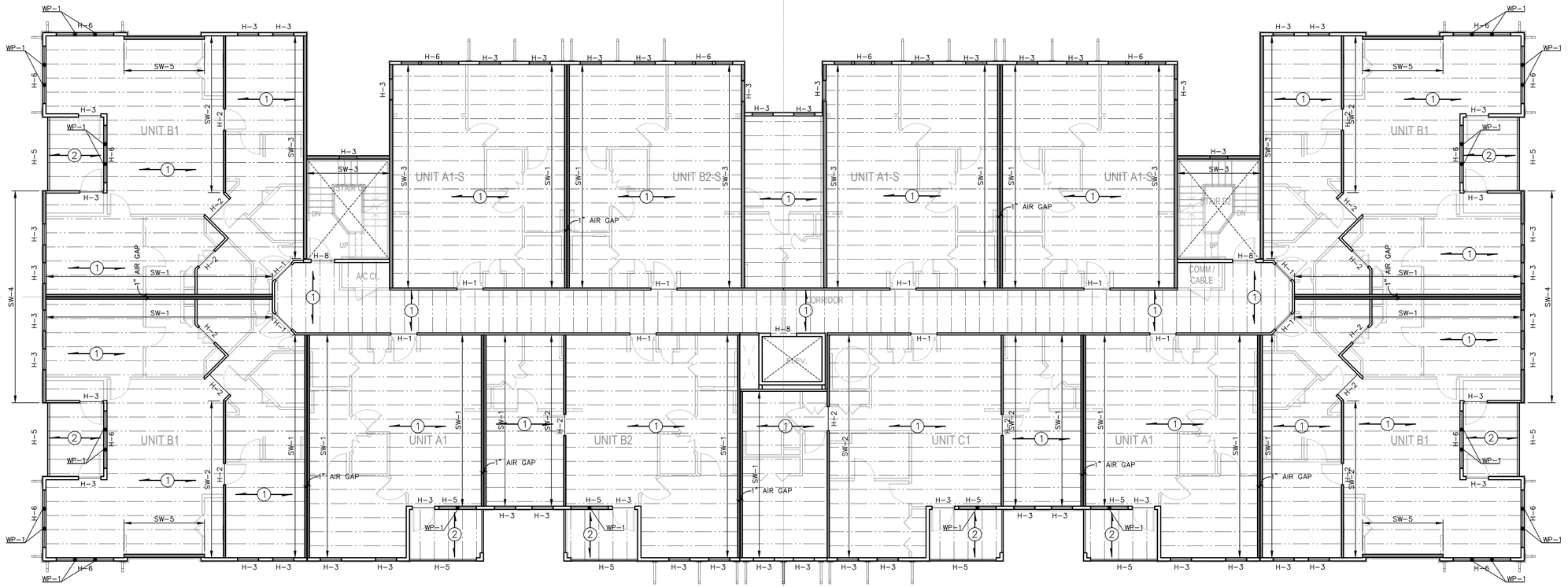

1 BUILDING TYPE 2 - LEVEL 4 FRAMING PLAN
1/8" = 1'-0"

U.S. DEPARTMENT OF HOUSING AND URBAN DEVELOPMENT

PERMIT REVIEW STAMP

ISSUE HISTORY

No.	Date	Description
1	07/21/17	DESIGN DEVELOPMENT
2	11/10/17	75%-90% REVIEW COORD. SET

REVISION HISTORY

No.	Date	Description

© 2017 These documents and their contents are the property of FUGLEBERG KOCH - AA26002103, and are issued only for the specific project noted on these drawings. Any modifications, revisions, or modifications of these documents without the expressed written consent of Fugleberg Koch, is prohibited by law.

FUGLEBERG KOCH
2555 Temple Trail, Winter Park, FL 32789 (407) 629-0595
www.fuglebergkoch.com AA26002103

CONSULTANT
GUTHERMAN STRUCTURAL INC.
330 CROWN OAK CENTRE DR.
LONGWOOD FL 32750
P: 407.701.0875 LIC. #28863
Gutherman STRUCTURAL
John Gutherman Jr., P.E.
FL. REG. #60080

SUMMER BAY APTS. II
LAKE COUNTY, FL

Drawn:	JRIVERA
Checked:	JGUTHERMAN
Approval:	JGUTHERMAN
Date:	Issue Date
Project #:	5389

BUILDING TYPE 2 - LEVEL 4 FRAMING PLAN

S1.09

ROOF FRAMING NOTES:

1. TRUSS BEARING ELEVATION IS +41'-1" U.N.O.
2. ROOF WOOD TRUSSES SHALL BE SPACED 2'-0" O.C. MAX.
3. G.T. INDICATES ROOF GIRDER TRUSS BY TRUSS MANUFACTURER.
4. H-# INDICATES WOOD HEADER, SEE SCHEDULE ON SHEET S2.02.
5. ROOF SHEATHING SHALL BE 15/32" O.S.B. SHEATHING. ATTACH SHEATHING WITH 8d NAILS AT 6" O.C. AT EDGES AND 12" O.C. AT ALL OTHER SUPPORTS.
6. RUNS FOR MECH'L, ELECTRICAL AND PLUMBING (MEP) THROUGH PRE-FABRICATED TRUSSES MUST BE COORDINATED WITH THE TRUSS DESIGNER AND MEP DWGS. (PIPING, DUCT RUNS, ETC.) FIRE SRPINKLER RUNS MUST ALSO BE COORDINATED.
7. FRAMING CONTRACTOR AND HVAC CONTRACTOR TO COORDINATE DUCT LOCATIONS PRIOR TO TRUSS FABRICATION.
8. ALL TRUSS UPLIFT CONNECTORS SHALL BE (B) U.N.O.
9. PROVIDE SIMPSON LGT2 TYP. FOR ALL G.T. UPLIFT CONNECTIONS WITH (3) STUDS BELOW TO GROUND, TYP..

"SIMPSON" TRUSS TIE DOWN (U.N.O.)

MARK	ANCHOR TYPE	NAILS TO TRUSS	NAILS TO PLATE	NAILS TO STUD	BOLTS	ALLOWABLE UPLIFT	LATERAL LOAD PARALLEL TO WALL	LATERAL LOAD PERPEND. TO WALL
(A)	H2.5A	5-8d	5-8d	5-8d	-	600 #	110 #	110 #
(B)	H10A**	9-10dx1 1/2"	9-10dx1 1/2"	9-10dx1 1/2"	-	1340 #	590 #	285 #
(C)	H16 / 16-2	2-10dx1 1/2"	10-10dx1 1/2"	9-10dx1 1/2"	-	1340 #	590 #	285 #
(D)	MGT	22-10d	-	-	5/8"ø	3965 #	-	-
(E)	LGT3-SDS2.5 *WHEN G.T. IS ABOVE HEADER, PROVIDE AN ST2215 AT EACH SIDE OF HEADER TO BEARING STUDS. PROVIDE (2) CS18 ACROSS FLOORS AND AN HDU2 AT FOUNDATION FOR EACH SIDE	12-SDS x 2 1/2"	26-16d	26-16d	-	9715 # MIN	-	-
(F)	H7Z	4-8d	2-8d	8-8d	-	985 #	400 #	-

**WHEN CONNECTOR (B) DOES NOT FIT DUE TO TRUSS PRESS PLATE INTERFERENCE, SUBSTITUTE (C) CONNECTOR

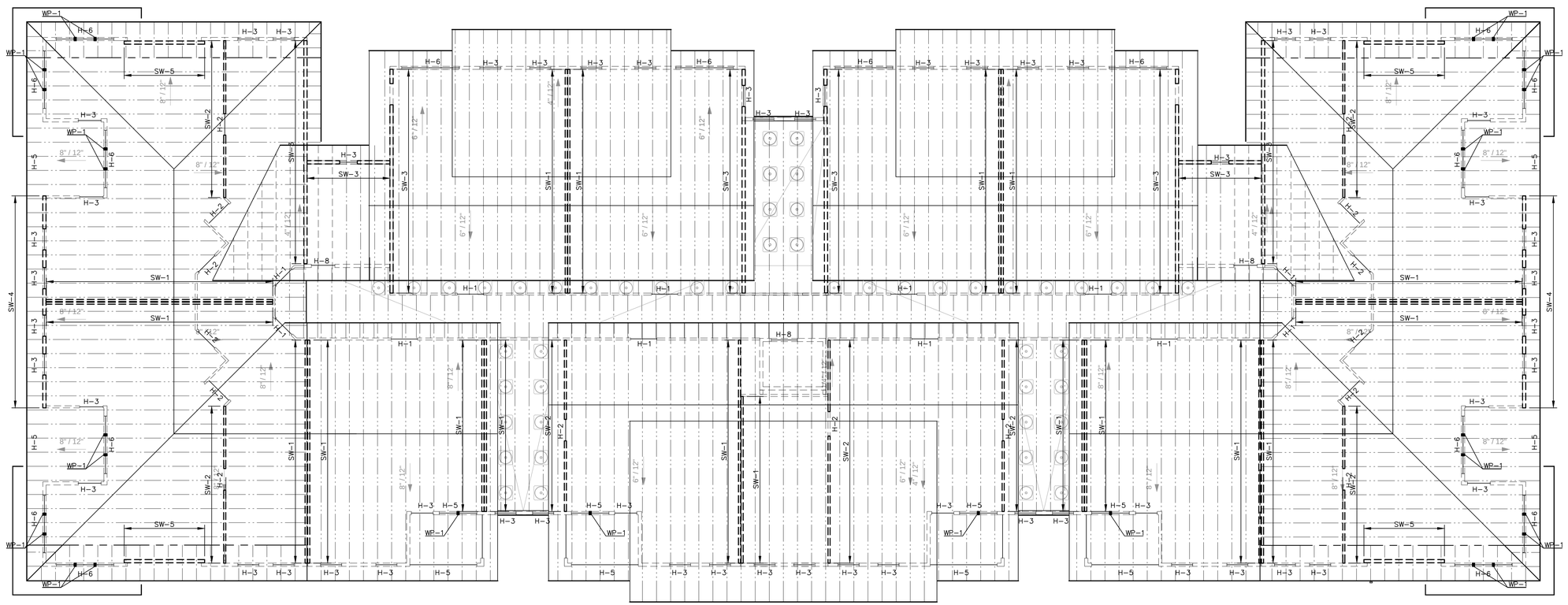

1 BUILDING TYPE 2 - ROOF FRAMING PLAN
1/8" = 1'-0"

U.S. DEPARTMENT OF HOUSING AND URBAN DEVELOPMENT

PERMIT REVIEW STAMP

ISSUE HISTORY

No.	Date	Description
1	07/21/17	DESIGN DEVELOPMENT
2	11/10/17	75%-90% REVIEW COORD. SET

REVISION HISTORY

No.	Date	Description

© 2017 These documents and their contents are the property of FUGLEBERG KOCH - AA26002103, and are issued only for the specific project noted on these drawings. Any reproductions, revisions, or modifications of these documents without the expressed written consent of Fugleberg Koch, is prohibited by law.

FUGLEBERG KOCH
2555 Temple Trail, Winter Park, FL 32789 (407) 629-0595
www.fuglebergkoch.com AA26002103

CONSULTANT
GUTHERMAN STRUCTURAL INC.
330 CROWN OAK CENTRE DR.
LONGWOOD FL 32750
P: 407.701.0875 LIC. #28863
Gutherman STRUCTURAL
John Gutherman Jr., P.E.
FL. REG. #60080

SUMMER BAY APTS. II
LAKE COUNTY, FL

Drawn:	JRIVERA
Checked:	JGUTHERMAN
Approval:	JGUTHERMAN
Date:	Issue Date
Project #:	5389

BUILDING TYPE 2 ROOF FRAMING PLAN

S1.10

STRUCTURAL NOTES

CONTRACTOR NOTE:

THE CONTRACTOR IS SOLELY RESPONSIBLE FOR INITIATING, MAINTAINING AND SUPERVISING ALL SAFETY PRECAUTIONS AND PROGRAMS IN CONNECTION WITH THE WORK. GUTHERMAN STRUCTURAL, INC. IS NOT RESPONSIBLE FOR THE MEANS AND METHODS OF CONSTRUCTION OR FOR RELATED SAFETY PRECAUTIONS AND PROGRAMS.

CODES AND STANDARDS

1. WIND LOADS AS PER:

   A. FLORIDA BUILDING CODE 5TH EDITION (2014) WITH AN ULTIMATE DESIGN WIND SPEED OF 139 MPH, EXPOSURE B, NOMINAL DESIGN WIND SPEED OF 107 MPH, +/–0.18 INTERNAL PRESSURE COEFFICIENT, AND BUILDING RISK CATEGORY II.

   B. THIS BUILDING IS DESIGNED AS AN ENCLOSED BUILDING.

2. THE PROJECT WAS DESIGNED IN ACCORDANCE WITH THE:

   A. FLORIDA BUILDING CODE 5TH EDITION (2014).

   B. BUILDING CODE REQUIREMENTS FOR REINFORCED CONCRETE (ACI 318/ 2011 EDITION).

   C. MANUAL OF STANDARD PRACTICE FOR DETAILING REINFORCED CONCRETE STRUCTURES (ACI 315/ LATEST EDITION).

   D. NATIONAL DESIGN SPECIFICATION, WOOD CONSTRUCTION NDS/2012 EDITION.

3. ARCHITECTURAL AND MECHANICAL DRAWINGS:

   A. THE STRUCTURAL DRAWINGS ARE PART OF THE CONTRACT DOCUMENTS AND DO NOT BY THEMSELVES PROVIDE ALL THE INFORMATION REQUIRED TO PROPERLY COMPLETE THE PROJECT STRUCTURE. THE GENERAL CONTRACTOR SHALL CONSULT THE ARCHITECTURAL, MECHANICAL AND ELECTRICAL DRAWINGS AND COORDINATE THE INFORMATION CONTAINED IN THESE DRAWINGS WITH THE STRUCTURAL DRAWINGS TO PROPERLY CONSTRUCT THE PROJECT.

   B. REFER TO ARCHITECTURAL, MECHANICAL OR ELECTRICAL DRAWINGS FOR ADDITIONAL OPENINGS, DEPRESSIONS, FINISHES, INSERTS, BOLTS SETTINGS, DRAINS, REGLETS, ETC.

   C. BEFORE ORDERING ANY MATERIALS OR DOING ANY WORK, THE CONTRACTOR SHALL VERIFY ALL MEASUREMENTS TO PROPERLY SIZE OR FIT THE WORK. NO EXTRA CHARGE OR COMPENSATION WILL BE ALLOWED BY THE OWNER RESULTING FROM THE CONTRACTOR'S FAILURE TO COMPLY WITH THIS REQUIREMENT.

   D. DISCREPANCIES SHALL BE BROUGHT TO THE ATTENTION OF THE ARCHITECT AND ENGINEER BEFORE PROCEEDING WITH ANY WORK.

   E. ALL STRUCTURES HAVE BEEN DESIGNED TO RESIST THE DESIGN LOADS LISTED ONLY AS COMPLETED STRUCTURES. THE GENERAL CONTRACTOR SHALL FULLY BRACE AND OTHERWISE PROTECT WORK IN PROGRESS UNTIL THE STRUCTURES ARE COMPLETED. THE GENERAL CONTRACTOR SHALL ALSO INSURE THAT ITS OPERATIONS AND PROCEDURES PROVIDE NO LOADING GREATER THAN THE DESIGN LOADS LISTED ON ANY MEMBER.

4. SECTIONS AND DETAILS:

   ALL DETAILS, SECTIONS AND NOTES SHOWN ON THE DRAWINGS ARE INTENDED TO BE TYPICAL AND SHALL APPLY TO SIMILAR SITUATIONS ELSEWHERE UNLESS OTHERWISE SHOWN.

5. THRESHOLD INSPECTIONS SHALL BE PERFORMED DURING CONSTRUCTION OF THIS BUILDING AS REQUIRED BY SECTION 110.8 OF FBC.

6. MATERIALS AND ASSEMBLY TEST AS FOLLOWS:

   A. EXTERIOR WINDOWS, SLIDING AND PATIO GLASS DOORS SHALL BE TESTED BY AN APPROVED INDEPENDENT TESTING LABORATORY, AND SHALL BE LABELED WITH AN APPROVED LABEL IDENTIFYING THE MANUFACTURER, PERFORMANCE CHARACTERISTICS AND APPROVED PRODUCT CERTIFICATION AGENCY, TESTING LABORATORY, EVALUATION ENTITY OR FLORIDA STATE WIDE PRODUCT APPROVAL NUMBER TO INDICATE COMPLIANCE WITH THE REQUIREMENTS OF ONE OF THE FOLLOWING SPECIFICATIONS:

   ANSI/AAMA/NWWDA 101/I.S. 2–97 OR TAS 202 (HVHZ SHALL COMPLY WITH TAS 202)

   B. EXTERIOR DOOR ASSEMBLIES SHALL BE TESTED FOR STRUCTURAL INTEGRITY IN ACCORDANCE WITH ASTM E330 AT A LOAD OF 1.5 TIMES THE REQUIRED DESIGN PRESSURE LOAD. THE LOAD SHALL BE SUSTAINED FOR 10 SECONDS WITH NO PERMANENT DEFORMATION OF ANY MAIN FRAME OR PANEL MEMBER IN EXCESS OF 0.4 PERCENT OF ITS SPAN AFTER THE LOAD IS REMOVED. HVHZ SHALL COMPLY WITH TAS 202. AFTER EACH SPECIFIED LOADING, THERE SHALL BE NO GLASS BREAKAGE, PERMANENT DAMAGE TO FASTENERS, HARDWARE PARTS, OR ANY OTHER DAMAGE, WHICH CAUSES THE DOOR TO BE INOPERABLE.

   C. SECTIONAL GARAGE DOORS SHALL BE TESTED FOR DETERMINATION OF STRUCTURAL PERFORMANCE UNDER UNIFORM STATIC AIR PRESSURE DIFFERENCE IN ACCORDANCE WITH ANSI/DASMA 115 OR TAS 201,202 AND 203.

   D. CUSTOM (ONE OF A KIND) EXTERIOR DOOR ASSEMBLIES SHALL BE TESTED BY AN APPROVED TESTING LABORATORY OR BE ENGINEERED IN ACCORDANCE WITH ACCEPTED ENGINEERING PRACTICES.

   E. WINDOW AND DOOR ASSEMBLIES SHALL BE ANCHORED IN ACCORDANCE WITH THE PUBLISHED MANUFACTURER'S RECOMMENDATIONS TO ACHIEVE THE DESIGN PRESSURE SPECIFIED. SUBSTITUTE ANCHORING SYSTEM USED FOR SUBSTRATES NOT SPECIFIED BY THE FENSTRATION MANUFACTURER SHALL PROVIDE EQUAL OR GREATER ANCHORING PERFORMANCE AS DEMONSTRATED BY ACCEPTED ENGINEERING PRACTICE.

SPECIALTY ENGINEERED PRODUCTS

1. THE GENERAL CONTRACTOR IS RESPONSIBLE TO COORDINATE THE PROPER SUBMISSION OF SPECIALTY ENGINEERED SHOP DRAWINGS WHICH SHALL BE SIGNED AND SEALED BY AN ENGINEER REGISTERED IN THE STATE OF FLORIDA. IT IS THE GENERAL CONTRACTOR'S RESPONSIBILITY TO ASSURE THAT THE SPECIALTY ENGINEERED SHOP DRAWINGS ARE SUBMITTED IN A TIMELY MANNER SO AS TO ALLOW REVIEWS AND RESUBMISSIONS AS REQUIRED. ALL SPECIALTY ENGINEERED PRODUCTS SHALL BE DESIGNED FOR THE APPROPRIATE GRAVITY LOADS AND WIND LOADS INCLUDING UPLIFT AND LATERAL LOADS. INTERIOR SPECIALTY PRODUCTS SHALL BE DESIGNED FOR LATERAL LOADS TO ASSURE STABILITY. SPECIALTY ENGINEERED PRODUCTS SHALL BE, BUT ARE NOT LIMITED TO, THE FOLLOWING:

   A. LIGHT GAUGE METAL, INCLUDING BUT NOT LIMITED TO, SOFFITS, CLADDING, CEILINGS, ETC.

   B. MISCELLANEOUS METALS INCLUDING STEEL STAIRS, MECHANICAL EQUIPMENT SUPPORTS, FRAMES THAT SUPPORT MACHINES, PIPES OR OTHER STRUCTURAL METAL USED FOR SUPPORT OF MECHANICAL SYSTEMS.

   C. MISCELLANEOUS HANGERS, CHANDELIERS, CABINETS, METAL FRAMES, LADDERS, RIGGING, HANGING WALLS, RAILINGS, GLAZING FRAMES, CLADDING SUCH AS STONE, PRECAST, ALUMINUM, METAL PANELS, CABLE BARRIER SYSTEMS, ETC. OR ANY OTHER MISCELLANEOUS PRODUCT REQUIRED BY ANY OF THE CONSTRUCTION DOCUMENTS.

D. IN ADDITION TO THE LOADS SHOWN IN THE DESIGN LOAD SCHEDULE, THE SPECIALTY ENGINEER SHALL DESIGN FOR THE WEIGHT OF ALL MECHANICAL, PLUMBING AND ELECTRICAL EQUIPMENT AND FIXTURES, AS WELL AS CHANDELIER FIXTURES, BAR CABINETS, AND ART WORK / MOBILES.

GENERAL CONTRACTOR TO INCLUDE IN THEIR BID THE COST OF THE ABOVE NOTED SPECIALTY ENGINEERING.

FOUNDATION

1. ALL SITE PREPARATION AND EXCAVATION WORK IS TO BE PERFORMED IN STRICT ACCORDANCE WITH THE:

   A. REPORT ON SOILS AND FOUNDATION INVESTIGATION PREPARED BY ECS FLORIDA, LLC REPORT NUMBER 24:6036, DATED APRIL 26, 2017

2. THE BUILDING SITE SHOULD BE EXCAVATED TO THE DEPTH AND EXTENT INDICATED IN THE SOILS REPORT. ALL SUBGRADES SHALL BE APPROVED IN WRITING BY THE SOILS ENGINEER PRIOR TO BACKFILLING.

3. BOTTOM OF FOOTINGS TO BEAR ON CONTROLLED COMPACTED FILL CAPABLE OF SAFELY SUPPORTING 2000 PSF.

4. SOILS SUPPORTING ALL FOOTINGS MUST BE INSPECTED AND APPROVED BY A REGISTERED SOILS ENGINEER BEFORE COMMENCING WORK. APPROVAL IN WRITING MUST INDICATE THE SOIL IS ADEQUATE TO SAFELY SUSTAIN SPECIFIED SOIL BEARING PRESSURE.

5. BOTTOM OF ALL FOOTINGS SHALL BEAR 1'–0" BELOW ADJACENT GRADE TYP. MAKE ADJUSTMENTS AS NEEDED SO BOTTOM OF EXTERIOR FOOTINGS SHALL BE MINIMUM 12–INCHES BELOW EXTERIOR FINISH GRADE.

6. EXCAVATION & BACKFILL:

   A. ALL EXCAVATION SHALL BE KEPT DRY. EXCAVATE TO DEPTHS AND DIMENSIONS INDICATED. TAKE EVERY PRECAUTION TO GUARD AGAINST ANY MOVEMENT OR SETTLEMENT OF ADJACENT STRUCTURES, UTILITIES, PIPING, ETC.

   B. PROVIDE ANY BRACING OR SHORING NECESSARY TO AVOID SETTLEMENT OR DISPLACEMENT OF EXISTING FOUNDATION OR STRUCTURES.

CONCRETE

1. ALL CONCRETE SHALL BE READY MIX AND MEET THE FOLLOWING REQUIREMENTS:

   A. A MINIMUM COMPRESSIVE STRENGTH OF 3000 PSI.
   B. SLUMPS SHALL BE 4–INCHES MINIMUM AND 6–INCHES MAXIMUM.
   C. CONCRETE SHALL HAVE 3 PERCENT AIR ENTRAINMENT.
   D. ALL CONCRETE TO HAVE MAXIMUM WATER/CEMENT RATIO OF 0.55.
   E. JOBSITE WATER SHALL NOT BE ADDED.

2. ALL CONCRETE WORK SHALL COMPLY WITH THE REQUIREMENTS OF THE ACI BUILDING CODE (ACI 318/ 2011 EDITION), THE ACI DETAILING MANUAL (ACI 315/ 1994 EDITION), AND THE SPECIFICATIONS FOR STRUCTURAL CONCRETE FOR BUILDINGS (ACI 301/ LATEST EDITION).

3. SUBMIT ALL REINFORCING STEEL SHOP DRAWINGS FOR APPROVAL PRIOR TO ANY FABRICATION.

4. CONCRETE COVER FOR REINFORCING STEEL SHALL BE AS REQUIRED BY ACI SPECIFICATIONS.

5. WELDED WIRE FABRIC SHALL COMPLY WITH ASTM A 1064, UNLESS OTHERWISE SPECIFIED. PLACE FABRIC 2" CLEAR FROM TOP OF THE SLAB IN SLAB ON GRADE AND SUPPORT ON SLAB BOLSTERS SPACED AT 3'–0" O.C.

6. LAP ALL BARS WITH CLASS B TENSION LAP SPLICE UNLESS OTHERWISE NOTED ON DRAWINGS. LAP ALL WWF A MINIMUM OF 12 INCHES (UNLESS OTHERWISE NOTED).

7. REINFORCING BARS:

   A. ALL REINFORCING STEEL SHALL BE MANUFACTURED FROM HIGH STRENGTH BILLET STEEL CONFORMING TO ASTM DESIGNATION A 615 GRADE 60.

   B. AT CORNERS OF CONCRETE WALLS, BEAMS AND CONTINUOUS WALL FOOTINGS, PROVIDE (1–#5 OR MATCHING) HORIZONTAL BARS X 5'–0" BENT BAR FOR EACH HORIZONTAL BAR SCHEDULED AT EACH FACE.

   C. WHERE COLUMNS ARE AN INTEGRAL PART OF CONCRETE WALLS, WALL REINFORCEMENT SHALL BE CONTINUOUS THRU THE COLUMNS.

   D. ALL HOOKS SHOWN IN REINFORCEMENT SHALL BE ACI RECOMMENDED HOOKS UNLESS OTHERWISE NOTED.

8. FOR GRADE BEAMS LAP ALL TOP STEEL AT MID–SPAN AND LAP BOTTOM STEEL OVER SUPPORT.

9. CONSTRUCTION JOINTS IN STRUCTURAL SLABS AND BEAMS SHALL BE AT MID–SPAN AND KEY JOINTED WITH REINFORCING CONTINUOUS ACROSS JOINT AND ADDITIONAL SHEAR FRICTION REINFORCING. CONSTRUCTION JOINT LOCATIONS SHALL BE SUBMITTED FOR REVIEW AND APPROVAL PRIOR TO CONSTRUCTION. CONSTRUCTION JOINTS IN POST–TENSION SLABS SHALL BE LOCATED AND DESIGNED BY SPECIALTY ENGINEER.

POST–TENSION CONCRETE

1. ENGAGE THE SERVICES OF A PROFESSIONAL ENGINEER REGISTERED IN THE STATE OF FLORIDA TO PREPARE AND SUBMIT COMPLETE SHOP DRAWINGS AND COMPLETE STRUCTURAL DESIGN COMPUTATIONS, INCLUDING STRESS LOSS CALCULATIONS AND DESIGN FOR ALL VERTICAL LOAD SUPPORT INCLUDING GRAVITY, AND UPLIFT FROM SHEAR WALLS. DRAWINGS SHALL BE SIGNED AND BEAR THE DELEGATED ENGINEER'S PROFESSIONAL SEAL. POST–TENSION SHOP DRAWINGS SHALL INCLUDE REBAR LAYOUT PLAN AND ANY ADDITIONAL REINFORCING NECESSARY FROM POST–TENSION SPECIALTY ENGINEER RESULTING FROM SPECIALTY ENGINEERS CALCULATIONS.

2. PRE–STRESSING SHALL CONFORM TO THE STANDARDS OF THE ACI BUILDING CODE 318/2011 EDITION.

3. POST TENSIONING CABLES SHALL HAVE A CORROSION PROTECTION SYSTEM, WHICH IS IN ACCORDANCE WITH THE RECOMMENDATION OF PRESTRESSED CONCRETE INSTITUTE FOR CABLES USED IN A CORROSIVE ENVIRONMENT.

4. TENDONS FOR PRE–STRESSING SHALL CONFORM TO THE ASTM SPECIFICATION A416 OR A421 AND SHALL BE 270K GRADE WITH A MINIMUM ULTIMATE STRENGTH OF 270,000 PSI AND A YIELD STRENGTH OF 240,000 PSI.

5. ALL TENDONS SHALL BE UNBONDED.

6. CONSTRUCTION JOINTS IN POST–TENSIONED MEMBERS SHALL BE APPROVED BY THE STRUCTURAL ENGINEER, PRIOR TO CONSTRUCTION.

STEEL STAIRS

1. ENGINEERED CONCRETE FILLED STEEL STAIR SYSTEM AND ALL CONNECTIONS OF THE SAME TO THIS STRUCTURE SHALL BE DESIGNED BY AN ENGINEER REGISTERED IN THE STATE OF FLORIDA. SUBMIT SHOP DRAWINGS BEARING THE EMBOSSED SEAL AND THE SIGNATURE OF THE ENGINEER FOR REVIEW PRIOR TO FABRICATION. THE CONFIGURATION OF THE STEEL STAIR SYSTEM SHALL BE SHOWN ON THE ARCHITECTURAL DRAWINGS. STEEL STAIR SYSTEM AND ALL CONNECTIONS SHALL BE DESIGNED FOR ALL APPLICABLE LOADS AS INDICATED ON THE PLANS AND IN ALL APPLICABLE BUILDING CODES. THE LOADS SHALL BE CLEARLY INDICATED ON ALL SHOP DRAWINGS. SHOP DRAWINGS SHALL SHOW AND SPECIFY ALL CONNECTIONS UTILIZED WITHIN THE STEEL STAIR SYSTEM AS WELL AS CONNECTIONS TO AND LOADS IMPOSED UPON THE STRUCTURAL SYSTEM SHOWN OF THESE PLANS.

WOOD

1. ALL STRUCTURAL WOOD MEMBERS ARE DESIGNED AS "DRY–USE". MOISTURE CONTENT MUST BE 19% OR LESS. STORE WOOD FRAMING ABOVE GROUND AND UNDER TARPS WITH PROPER AIR CIRCULATION.

2. ALL LUMBER SHALL BE SOUTHERN PINE SPECIES #2 GRADE OR APPROVED EQUAL. ALLOWABLE DESIGN STRESSES SHALL FOLLOW NATIONAL DESIGN SPECIFICATION (NDS) (LATEST EDITION).

3. HEADERS AT NON BEARING CONDITIONS SHALL BE AS FOLLOWS:

OPENING SIZE	HEADER
UP TO 4' –0"	(2) 2" X 6"
4'– 0" TO 6'– 0"	(2) 2" X 8"
6'– 0" TO 9'– 0"	(2) 2" X 10"

4. PROVIDE SP ACQ PRESSURE TREATED LUMBER IN ACCORDANCE WITH AWPA STANDARDS TO A MINIMUM 0.40 PCF RETENTION WHERE LUMBER IS IN CONTACT WITH CONCRETE/MASONRY OR OUTSIDE OF BUILDING. ALL METAL CONNECTORS IN CONTACT WITH PRESSURE TREADED LUMBER SHALL BE GALVANIZED WITH A RATING OF G–185 AND CONFORM TO ASTM A653. ALL NAILS AND SCREWS USED WITH PRESSURE TREATED LUMBER ARE TO BE HOT–DIPPED GALVANIZED AND TO CONFORM TO ASTM A153 CLASS D. ELECTROGALVANIZED FASTENERS SHALL HAVE A CLASS RATING PER ASTM B695 NO LESS THAN 55. ALUMINUM NOT TO BE USED IN DIRECT CONTACT WITH ACQ TREATED LUMBER.

WOOD (CONT.)

5. PLYWOOD SHEATHING:

   A. FLOOR: USE 3/4" T&G APA 24oc STURD–I–FLOOR, EXP. 1, PLYWOOD SUB–FLOOR SHEATHING.

   B. WALL: Use (7/16") APA 32/16 RATED, EXP. 1, PLYWOOD SHEATHING OR OSB.

   C. ROOF: Use (15/32") 32/16 RATED, EXP. 1, PLYWOOD SHEATHING.

   D. SEE FRAMING PLANS FOR NAILING AND/OR BLOCKING REQUIREMENTS. USE 8'– 0" LONG X 4'–0" WIDE SHEETS WITH LENGTH ACROSS FRAMING. STAGGER PANEL END JOINTS 4'–0" TYP., ALLOW 1/8" SPACE ALONG PANEL EDGES AND END JOINTS.

   E. FLOOR SHEATHING TO BE SCREWED WITH #10 WOOD SCREWS AT 6" O.C. AND GLUED FOR PARTIAL COMPOSITE ACTION. SELECT ADHESIVE WITH APA AFG–01 SPECIFICATION AND FOLLOW APA RECOMMENDATIONS.

   F. SEE FRAMING PLANS FOR DIAPHRAGM NAILING TYPE, SIZE, SPACING AND LOCATIONS.

6. WOOD CONNECTIONS – ALL NAILS USED FOR STRUCTURAL FRAMING MEMBERS SHALL BE COMMON WIRE, U.N.O. ALL NAILS, TRUSS HANGERS, TRUSS ANCHORS AND STRAPS SHALL BE GALVANIZED FOR CORROSIVE RESISTANCE. ALL METAL STRAPS MUST BE INSTALLED WITH EQUAL LENGTHS ABOUT THE JOINT LINE. USE SIMPSON STRONG–TIE CONNECTOR PRODUCTS OR APPROVED EQUAL. TOE NAILING WILL NOT BE PERMITTED.

TIMBER

1. ALL MICROLLAM LVL BEAMS TO

   A. BE ENGINEERED AND MANUFACTURED BY TRUS JOIST WEYERHAEUSER (TJW) OR APPROVED EQUAL. TEMPORARY BRACING TO BE INSTALLED PER MANUFACTURER'S RECOMMENDATIONS. PROVIDE CONTINUOUS SUPPORT OF THE COMPRESSION EDGE AND PROVIDE LATERAL SUPPORT AT ALL BEARINGS. THE MINIMUM ALLOWABLE STRESSES FOR MICROLLAM BEAMS ARE AS FOLLOWS:

   Fb = 2,600 PSI Fv = 285 PSI E = 1,900,000 PSI

   B. CONNECT: (2) PLY LVL W/3 ROWS OF 16d COMMON NAILS AT 12" O/C;

   C. CONNECT: (3) PLY LVL W/3 ROWS OF 16d COMMON NAILS AT 12" O/C, EACH FACE;

2. ALL PARALLAM PSL BEAMS TO

   A. BE ENGINEERED AND MANUFACTURED BY TRUS JOIST WEYERHAEUSER (TJW) OR APPROVED EQUAL. TEMPORARY BRACING TO BE INSTALLED PER MANUFACTURER'S RECOMMENDATIONS. PROVIDE CONTINUOUS SUPPORT OF THE COMPRESSION EDGE AND PROVIDE LATERAL SUPPORT AT ALL BEARINGS. THE MINIMUM ALLOWABLE STRESSES FOR PARALLAM BEAMS ARE AS FOLLOWS:

   Fb = 2,900 PSI Fv = 290 PSI E = 2,000,000 PSI

   B. ALL EXPOSED EXTERIOR PARALLAM BEAMS ARE TO BE WOLMANIZED PRESSURE TREATED FOR A SERVICE LEVEL 2 EXPOSURE. ALL OTHER PARALLAM BEAMS ARE TO BE WOLMANIZED PRESSURE TREATED FOR A SERVICE LEVEL 1 EXPOSURE.

3. ALL PARALLAM PSL COLUMNS TO

   A. BE ENGINEERED AND MANUFACTURED BY TRUS JOIST WEYERHAEUSER (TJW) OR APPROVED EQUAL. TEMPORARY BRACING TO BE INSTALLED PER MANUFACTURER'S RECOMMENDATIONS. THE MINIMUM ALLOWABLE PROPERTIES FOR PARALLAM COLUMNS THE MINIMUM ALLOWABLE STRESSES ARE AS FOLLOWS:

   Fb = 2,400 PSI Fcll = 2500 PSI E = 1,800,000 PSI

   B. ALL EXPOSED EXTERIOR PARALLAM COLUMNS ARE TO BE WOLMANIZED PRESSURE TREATED FOR A SERVICE LEVEL 2 EXPOSURE. ALL OTHER PARALLAM COLUMNS ARE TO BE WOLMANIZED PRESSURE TREATED FOR A SERVICE LEVEL 1 EXPOSURE.

4. ALL STRUCTURAL TIMBER TO

   A. SOUTHERN PINE SPECIES, #2 GRADE (MINIMUM) OR APPROVED EQUAL.

   B. BE DESIGNED PER THE AMERICAN INSTITUTE OF TIMBER CONSTRUCTION'S (AITC)"TIMBER CONSTRUCTION MANUAL" AND AMERICAN FOREST & PAPER ASSOCIATION'S (AFPA) NATIONAL DESIGN SPECIFICATION".

   C. PROVIDE SP ACQ PRESSURE TREATED LUMBER IN ACCORDANCE WITH AWPA STANDARDS TO A MINIMUM 0.40 PCF RETENTION WHERE LUMBER IS IN CONTACT WITH CONCRETE/MASONRY OR OUTSIDE OF BUILDING. ALL METAL CONNECTORS IN CONTACT WITH PRESSURE TREADED LUMBER SHALL BE GALVANIZED WITH A RATING OF G–185 AND CONFORM TO ASTM A653. ALL NAILS AND SCREWS USED WITH PRESSURE TREATED LUMBER ARE TO BE HOT–DIPPED GALVANIZED AND TO CONFORM TO ASTM A153 CLASS D. ELECTROGALVANIZED FASTENERS SHALL HAVE A CLASS RATING PER ASTM B695 NO LESS THAN 55. ALUMINUM NOT TO BE USED IN DIRECT CONTACT WITH ACQ TREATED LUMBER.

5. ALL GLUED LAMINATED BEAMS SHALL BE VISUALLY GRADED SOUTHERN PINE OR APPROVED EQUAL AND:

   A. BE DESIGNED AND MANUFACTURED WITH ANSI/AITC A.190.1–2007, THE AMERICAN INSTITUTE OF TIMBER CONSTRUCTION'S (AITC)"TIMBER CONSTRUCTION MANUAL", AMERICAN FOREST & PAPER ASSOCIATION'S (AFPA) NATIONAL DESIGN SPECIFICATION", AND AMERICAN PLYWOOD ASSOCAITION–ENGINEERED WOOD SYSTEMS STANDARDS.

   B. GLUE LAMINATED BEAM ADHESIVES TO CONFORM WITH ASTM D2559–92.

   C. THE MINIMUM ALLOWABLE PROPERTIES FOR GLUED LAMINATED BEAMS ARE AS FOLLOWS:

   Fb = 2,400 PSI Fv = 240 PSI E = 1.7 X 106 PSI

   D. BE PRESSURE TREATED WITH A WATER BORNE PRESERVATIVE FOR EXTERIOR USE OR WHEN IN CONTACT WITH CONCRETE OR MASONRY PER AITC 109–90 AND AMERICAN WOOD PRESERVERS C–28 STANDARDS.

6. ALL TIMBER AND GLUE LAMINATED BEAM CONSTRUCTION SHALL COMPLY WITH SPECIFICATIONS AND CODES AS SPECIFIED BELOW:

   A. NATIONAL LUMBER MANUFACTURERS ASSOCIATION: NATIONAL DESIGN SPECIFICATION FOR STRESS GRADE LUMBER AND ITS FASTENINGS.

7. ALL TIMBER AND GLUE LAMINATED CONNECTIONS ARE TO BE MADE USING PREFABRICATED STEEL CONNECTORS. TOE NAILING WILL NOT BE PERMITTED. SUBMIT MANUFACTURER'S DATA FOR APPROVAL. FASTENERS TO BE AS MANUFACTURED BY HECKMANN, SIMPSON STRONG–TIE OR APPROVED EQUAL.

8. GLUE LAMINATED CONSTRUCTION: DESIGN, FABRICATION AND CONSTRUCTION OF STRUCTURAL GLUE LAMINATED. TIMBER SHALL CONFORM WITH THE FOLLOWING STANDARDS:

   A. PROVIDE FACTORY GLUED TIMBER UNITS, PRODUCED BY AN AITC OR APA–EWS LICENSED FIRM QUALIFIED TO APPLY THE AITC OR APA–EWS QUALITY INSPECTED TRADEMARK.

   B. SUBMIT SHOP DRAWINGS SHOWING FULL DIMENSIONS OF EACH MEMBER AND LAYOUT OF ENTIRE STRUCTURAL SYSTEM. SHOW DETAILS OF CONNECTION, CONNECTORS AND ACCESSORIES. INDICATE SPECIES AND STRESS GRADE OF LUMBER AND TYPE OF ADHESIVES.

   C. KEEP GLUE LAMINATED BEAMS DRY DURING DELIVERY, STORAGE, HANDLING, ERECTION, AND UNTIL THE BUILDING ENCLOSURE IS COMPLETED.

   D. APPEARANCE SHALL BE INDUSTRIAL GRADE. EXCEPT EXPOSED MEMBERS AS NOTED ON DRAWINGS, WHICH SHALL HAVE ARCHITECTURAL GRADE.

   E. CONTRACTOR SHALL PROVIDE CONNECTION HARDWARE REQUIRED (INDICATED ON PLANS OR NOT) TO PROPERLY JOIN MEMBERS TO EACH OTHER AND TO THEIR SUPPORTS. CONNECTIONS SHALL BE CAPABLE OF TRANSFERRING THE APPLIED LOAD TO THE SUPPORTING MEMBERS. STEEL PLATES, ANGLES, OR OTHER SHAPES SHALL CONFORM TO ASTM A 36, AND BOLTS SHALL CONFORM TO ASTM A–325. LAG SCREWS, SHEAR PLATES, SPLIT RINGS, ETC. CONNECTORS SHALL CONFORM TO THE "AMERICAN FOREST AND PAPER ASSOCIATION".

   F. CONNECTING HARDWARE SHALL BE HOT–DIP GALVANIZED AFTER FABRICATION CONFORMING WITH ASTM A 123.

WOOD TRUSSES

1. WOOD ROOF TRUSSES AND WOOD FLOOR TRUSSES ARE TO BE DESIGNED FOR THE WOOD FABRICATOR BY A PROFESSIONAL SPECIALTY ENGINEER REGISTERED IN THE STATE OF FLORIDA. SEALED CALCULATIONS AND LAYOUT DRAWINGS ARE TO BE SUBMITTED FOR APPROVAL. TRUSS FABRICATOR TO PROVIDE ALL TRUSS–TO–TRUSS HANGERS AS REQUIRED TO RESIST GRAVITY AND UPLIFT REACTION. (UPLIFT LOADING SHALL USE COMPONENTS & CLADDING WIND FORCES.)

2. WOOD TRUSSES SHALL BE BRACED AND ERECTED IN ACCORDANCE WITH THE 2008 EDITION OF THE BUILDING COMPONENT SAFETY INFORMATION GUIDE TO GOOD PRACTICE FOR HANDLING, INSTALLING, RESTRAINING & BRACING OF METAL PLATE CONNECTED WOOD TRUSSES, JOINTLY PRODUCED BY WTCA AND TRUSS PLATE INSTITUTE. BRACING IN THE PLANE OF THE WEB MEMBERS:

   A. THE TRUSS FABRICATOR SHALL PROVIDE AND LOCATE CONTINUOUS LATERAL BRACING FOR EACH TRUSS WEB MEMBER AS REQUIRED.

   B. LATERAL BRACING SHALL BE RESTRAINED BY DIAGONAL BRACING (MIN. 2" THICK NOMINAL LUMBER). THIS BRACING IS TO BE CONTINUOUS.

   C. A MINIMUM OF TWO ROWS OF DIAGONAL BRACING IS REQUIRED, ONE AT EACH VERTICAL WEB MEMBER CLOSEST TO BEARING LOCATIONS.

3. THE BOTTOM CHORDS SHALL BE BRACED BY CONTINUOUS LATERAL BRACING SPACED AT 8'–0" ON CENTER WITH A CEILING ATTACHED TO BOTTOM OF TRUSSES. IF NO CEILING IS ATTACHED TO BOTTOM OF TRUSSES, BRACING SHALL BE MINIMUM 2X4 @ 36" ON CENTER NAILED TO THE TOP OF THE BOTTOM CHORD. DIAGONALS PLACED AT 45 DEGREES TO THE LATERAL BRACES SHALL BE LOCATED AT EACH END. IF BUILDING EXCEEDS 60 FEET IN LENGTH, DIAGONAL BRACING SHOULD BE REPEATED AT 20 FOOT INTERVALS.

4. TOP CHORD BRACING:

   A. IF PLYWOOD DECKING IS APPLIED DIRECTLY TO TOP CHORD, PROPERLY LAPPED AND NAILED TO DEVELOP DIAPHRAGM ACTION, BRACING IS NOT REQUIRED.

   B. IF PURLINS ARE USED, DIAGONAL TOP CHORD BRACING IS REQUIRED AT EACH END. IF BUILDING EXCEEDS 60 FEET IN LENGTH, DIAGONAL BRACING SHOULD BE REPEATED AT 20–FOOT INTERVALS.

5. DO NOT CUT, DRILL OR NOTCH ROOF OR FLOOR TRUSSES WITHOUT WRITTEN APPROVAL FROM TRUSS ENGINEER. COORDINATE MECHANICAL, ELECTRICAL, PLUMBING, ETC. SIZES AND LOCATIONS WITH TRUSS LAYOUT PRIOR TO ERECTION.

6. TRUSSES SHALL BE MANUFACTURED & DESIGNED IN ACCORDANCE WITH NATIONAL DESIGN SPECIFICATION(S) FOR WOOD CONSTRUCTION, AF & PA, AND NATIONAL DESIGN STANDARD FOR METAL PLATE CONNECTED WOOD TRUSS CONSTRUCTION, ANSI/TPI 1–2007, AND THE LOCAL CODE JURISDICTIONS.

7. DO NOT OVERLOAD FLOOR OR ROOF TRUSSES WITH BUILDING MATERIALS.

8. CONNECTOR PLATES SHALL BE MANUFACTURED BY A WTCA MEMBER PLATE SUPPLIER AND SHALL MEET OR EXCEED ASTM A653/A653M REQUIREMENTS FOR STRUCTURAL STEEL.

SHOP DRAWINGS

1. THE SHOP DRAWINGS SHALL BE SUBMITTED IN COMPLETE PACKAGES FOR THE FOLLOWING:

   A. CONCRETE MIX DESIGNS
   B. POST–TENSIONED CONCRETE
   C. PRE–ENGINEERED STEEL STAIRS
   D. PRE–ENGINEERED WOOD TRUSSES
   E. PRE–ENGINEERED WOOD SYSTEMS (I.E. TJI, PARALLAM, MRCROLAM, ETC.)
   F. HEAVY TIMBER WOOD FRAMING

2. PRE–ENGINEERED ITEMS SHALL BE SUBMITTED SIGNED AND SEALED BY A SPECIALTY ENGINEER REGISTERED IN THE STATE OF FLORIDA.

U.S. DEPARTMENT OF HOUSING AND URBAN DEVELOPMENT

PERMIT REVIEW STAMP

ISSUE HISTORY

No.	Date	Description
1	07/21/17	DESIGN DEVELOPMENT
2	11/10/17	75%-90% REVIEW COORD. SET

REVISION HISTORY

No.	Date	Description

© 2017 These documents and their contents are the property of LUCLEBERG KOCH - AA26002103, and are issued only for the specific project noted on these drawings. Any reproductions, modifications or disclosure of these documents without the expressed written consent of Fugleberg Koch, is prohibited by law.

FUGLEBERG KOCH
2555 Temple Trail, Winter Park, FL 32789 (407) 629-0595
www.fuglebergkoch.com AA26002103

CONSULTANT

GUTHERMAN STRUCTURAL INC.
150 CROWN OAK CENTRE DR.
LONGWOOD FL 32750
P: 407.701.0875 LIC. #28863
Gutherman STRUCTURAL
John Gutherman Jr., P.E.
FL. REG. #60880

SUMMER BAY APTS. II

LAKE COUNTY, FL

Drawn:	JRIVERA
Checked:	JGUTHERMAN
Approval:	JGUTHERMAN
Date:	Issue Date
Project #:	5389

STRUCTURAL NOTES & SCHEDULES

S2.01

	TENANT WALL, UNITS SIDE			TENANT WALL, AIR-GAP SIDE, NO SHEATHING					
	LOCATION	SHEATHING MATERIAL	EDGE NAILING	FIELD NAILING	SHEATHING MATERIAL	EDGE NAILING	FIELD NAILING	UPLIFT AT END OF WALL	BOTTOM SILL PLATE ATTACHMENT	# OF STUDS AT WALL ENDS
SW-1	GROUND TO 2ND	7/16" CDX OR OSB	8d AT 6" O.C.	8d AT 12" O.C.	–	–	–	6,200 LB	5/8"ø ANCHOR BOLTS 5" EMBED AT 32" O.C.	(4) 2X4
	2ND TO 3RD	5/8" TYPE "X" GYPSUM SHEATHING BOARD	6d COOLER OR WALLBOARD NAIL @ 4" O.C.	6d COOLER OR WALLBOARD NAIL @ 7" O.C.	–	–	–	4,000 LB	(2) 0.162"ø NAILS AT 8" O.C.	(4) 2X4
	3RD TO 4TH	5/8" TYPE "X" GYPSUM SHEATHING BOARD	6d COOLER OR WALLBOARD NAIL @ 4" O.C.	6d COOLER OR WALLBOARD NAIL @ 7" O.C.	–	–	–	2,000 LB	(2) 0.162"ø NAILS AT 12" O.C.	(4) 2X4
	4TH TO ROOF	5/8" TYPE "X" GYPSUM SHEATHING BOARD	6d COOLER OR WALLBOARD NAIL @ 4" O.C.	6d COOLER OR WALLBOARD NAIL @ 7" O.C.	–	–	–	1,000 LB	(2) 0.162"ø NAILS AT 12" O.C.	(4) 2X4
	LEFT SIDE OF UNIT INTERIOR WALL SHEATHING				RIGHT SIDE OF UNIT INTERIOR WALL SHEATHING					
	LOCATION	SHEATHING MATERIAL	EDGE NAILING	FIELD NAILING	SHEATHING MATERIAL	EDGE NAILING	FIELD NAILING	UPLIFT AT END OF WALL	BOTTOM SILL PLATE ATTACHMENT	# OF STUDS AT WALL ENDS
SW-2	GROUND TO 2ND	(2) LAYERS 5/8" TYPE "X" GYPSUM SHEATHING BOARD	BASE PLY-6d AT 9" O.C.	FACE PLY-8d AT 7" O.C.	(2) LAYERS 5/8" TYPE "X" GYPSUM SHEATHING BOARD	BASE PLY-6d AT 9" O.C.	FACE PLY-8d AT 7" O.C.	12,000 LB	5/8"ø ANCHOR BOLTS 5" EMBED AT 32" O.C.	(4) 2X4
	2ND TO 3RD	5/8" TYPE "X" GYPSUM SHEATHING BOARD	6d COOLER OR WALLBOARD NAIL @ 4" O.C.	6d COOLER OR WALLBOARD NAIL @ 7" O.C.	5/8" TYPE "X" GYPSUM SHEATHING BOARD	6d COOLER OR WALLBOARD NAIL @ 4" O.C.	6d COOLER OR WALLBOARD NAIL @ 7" O.C.	7,200 LB	(2) 0.162"ø NAILS AT 8" O.C.	(4) 2X4
	3RD TO 4TH	5/8" TYPE "X" GYPSUM SHEATHING BOARD	6d COOLER OR WALLBOARD NAIL @ 4" O.C.	6d COOLER OR WALLBOARD NAIL @ 7" O.C.	5/8" TYPE "X" GYPSUM SHEATHING BOARD	6d COOLER OR WALLBOARD NAIL @ 4" O.C.	6d COOLER OR WALLBOARD NAIL @ 7" O.C.	4,000 LB	(2) 0.162"ø NAILS AT 12" O.C.	(4) 2X4
	4TH TO ROOF	5/8" TYPE "X" GYPSUM SHEATHING BOARD	6d COOLER OR WALLBOARD NAIL @ 4" O.C.	6d COOLER OR WALLBOARD NAIL @ 7" O.C.	5/8" TYPE "X" GYPSUM SHEATHING BOARD	6d COOLER OR WALLBOARD NAIL @ 4" O.C.	6d COOLER OR WALLBOARD NAIL @ 7" O.C.	1,200 LB	(2) 0.162"ø NAILS AT 12" O.C.	(4) 2X4
	ONE SIDE WALL SHEATHING									
	LOCATION	SHEATHING MATERIAL	EDGE NAILING	FIELD NAILING	SHEATHING MATERIAL	EDGE NAILING	FIELD NAILING	UPLIFT AT END OF WALL	BOTTOM SILL PLATE ATTACHMENT	# OF STUDS AT WALL ENDS
SW-3	GROUND TO 2ND	7/16" CDX OR OSB	8d AT 6" O.C.	8d AT 12" O.C.				7,200 LB	5/8"ø ANCHOR BOLTS 5" EMBED AT 32" O.C.	(3)2X6
	2ND TO 3RD	7/16" CDX OR OSB	8d AT 6" O.C.	8d AT 12" O.C.				4,300 LB	(2) 0.162"ø NAILS AT 6" O.C.	(2)2X6
	3RD TO 4TH	5/8" TYPE "X" GYPSUM SHEATHING BOARD	6d COOLER OR WALLBOARD NAIL @ 4" O.C.	6d COOLER OR WALLBOARD NAIL @ 7" O.C.				2,200 LB	(2) 0.162"ø NAILS AT 8" O.C.	(2)2X6
	4TH TO ROOF	5/8" TYPE "X" GYPSUM SHEATHING BOARD	6d COOLER OR WALLBOARD NAIL @ 4" O.C.	6d COOLER OR WALLBOARD NAIL @ 7" O.C.				1,000 LB	(2) 0.162"ø NAILS AT 12" O.C.	(2)2X6
	EXTERIOR WALL SHEATHING				INTERIOR WALL SHEATHING					
	LOCATION	SHEATHING MATERIAL	EDGE NAILING	FIELD NAILING	SHEATHING MATERIAL	EDGE NAILING	FIELD NAILING	UPLIFT AT EACH OPENING	BOTTOM SILL PLATE ATTACHMENT	# OF STUDS AT WALL ENDS
SW-4	GROUND TO 2ND	7/16" CDX OR OSB	8d AT 6" O.C.	8d AT 12" O.C.	5/8" TYPE "X" GYPSUM SHEATHING BOARD	6d COOLER OR WALLBOARD NAIL @ 4" O.C.	6d COOLER OR WALLBOARD NAIL @ 7" O.C.	16,800 LB	5/8"ø ANCHOR BOLTS 5" EMBED AT 24" O.C.	(3)2X6
	2ND TO 3RD	7/16" CDX OR OSB	8d AT 6" O.C.	8d AT 12" O.C.	5/8" TYPE "X" GYPSUM SHEATHING BOARD	6d COOLER OR WALLBOARD NAIL @ 4" O.C.	6d COOLER OR WALLBOARD NAIL @ 7" O.C.	12,000 LB	(2) 0.162"ø NAILS AT 6" O.C.	(3)2X6
	3RD TO 4TH	7/16" CDX OR OSB	8d AT 6" O.C.	8d AT 12" O.C.	5/8" TYPE "X" GYPSUM SHEATHING BOARD	6d COOLER OR WALLBOARD NAIL @ 4" O.C.	6d COOLER OR WALLBOARD NAIL @ 7" O.C.	7,500 LB	(2) 0.162"ø NAILS AT 8" O.C.	(2)2X6
	4TH TO ROOF	7/16" CDX OR OSB	8d AT 6" O.C.	8d AT 12" O.C.	5/8" TYPE "X" GYPSUM SHEATHING BOARD	6d COOLER OR WALLBOARD NAIL @ 4" O.C.	6d COOLER OR WALLBOARD NAIL @ 7" O.C.	2,200 LB	(2) 0.162"ø NAILS AT 12" O.C.	(2)2X6
	LEFT SIDE OF UNIT INTERIOR WALL SHEATHING				RIGHT SIDE OF UNIT INTERIOR WALL SHEATHING					
	LOCATION	SHEATHING MATERIAL	EDGE NAILING	FIELD NAILING	SHEATHING MATERIAL	EDGE NAILING	FIELD NAILING	UPLIFT AT END OF WALL	BOTTOM SILL PLATE ATTACHMENT	# OF STUDS AT WALL ENDS
SW-5	GROUND TO 2ND	15/32" CDX	10d AT 4" O.C.	10d AT 12" O.C.	5/8" TYPE "X" GYPSUM SHEATHING BOARD	6d COOLER OR WALLBOARD NAIL @ 7" O.C.	6d COOLER OR WALLBOARD NAIL @ 12" O.C.	23,800 LB	5/8"ø ANCHOR BOLTS 5" EMBED AT 32" O.C.	(3)2X6
	2ND TO 3RD	15/32" CDX	10d AT 6" O.C.	10d AT 12" O.C.	5/8" TYPE "X" GYPSUM SHEATHING BOARD	6d COOLER OR WALLBOARD NAIL @ 7" O.C.	6d COOLER OR WALLBOARD NAIL @ 12" O.C.	15,000 LB	(2) 0.162"ø NAILS AT 6" O.C.	(2)2X6
	3RD TO 4TH	15/32" CDX	10d AT 6" O.C.	10d AT 12" O.C.	5/8" TYPE "X" GYPSUM SHEATHING BOARD	6d COOLER OR WALLBOARD NAIL @ 7" O.C.	6d COOLER OR WALLBOARD NAIL @ 12" O.C.	8,200 LB	(2) 0.162"ø NAILS AT 8" O.C.	(2)2X6
	4TH TO ROOF	5/8" TYPE "X" GYPSUM SHEATHING BOARD	6d COOLER OR WALLBOARD NAIL @ 7" O.C.	6d COOLER OR WALLBOARD NAIL @ 12" O.C.	5/8" TYPE "X" GYPSUM SHEATHING BOARD	6d COOLER OR WALLBOARD NAIL @ 7" O.C.	6d COOLER OR WALLBOARD NAIL @ 12" O.C.	3,200 LB	(2) 0.162"ø NAILS AT 12" O.C.	(2)2X6

SHRINKAGE CHART

	INCHES PER FLOOR	INCHES CUMULATIVE
ROOF	.239	.956
4th	.239	.717
3rd	.239	.478
2nd	.239	.239

ALL AND ANY CONTINUOUS ROD SYSTEM SHALL HAVE SHRINKAGE COMPENSATION DEVICES.

CONTINUOUS TIE DOWN ROD SYSTEMS: CONTRACTOR SHALL PROVIDE A CONTINUOUS ROD TIE DOWN SYSTEM USING CLP ROD SYSTEMS, SIMPSON RTUD TAKE UP DEVICES, OR OTHER SIMILAR PRODUCTS. ALL PRODUCTS MUST BE SIGNED AND SEALED BY A SPECIALTY DESIGN PROFESSIONAL BEING ABLE TO MEET OR EXCEED THE SCHEDULED UPLIFT LOADS SPECIFIED IN THE TABLE ON THIS SHEET.

DESIGN LOAD SCHEDULE

(ALL LOADS SHOWN ARE IN POUNDS PER SQ. FT.)

COMPONENT \ AREA	ELEVATED LIVING FLOOR AREAS	CORRIDORS	BALCONIES	ROOF	STAIRS	SLAB ON GRADE
SYSTEM	5	5	5		50	
BOTTOM CHORD DEAD	5	10	10	10		
PARTITIONS	5					
TOP CHORD DEAD				15		
TOPPING	10	10	30			
TOTAL DEAD LOAD	25	25	45	25	50	
TOTAL LIVE LOAD	40	40	40	20	100	100
TOTAL LOAD	65	65	85	45	150	100

FOOTING SCHEDULE

MARK	SIZE W x D x L	REINFORCING
F30	3'-0"x3'-0"x 12" DEEP	(4) #5 EA. WAY BOTTOM

WOOD POST SCHEDULE

MARK	SIZE (IN.)	SIMPSON BASE/CAP	TOTAL SERVICE LOAD (KIPS)
WP-1	3.50 x 5.25 PSL	ABU44Z/PC6Z	20
WP-2	3.50 x 7.00 PSL	ABU44/LCE 4 EA SIDE	12

HEADER SCHEDULE

MARK	SIZE (IN.)	BEARING STUDS
H-1	(2) 2 X 6	(3") B & (2) FULL HEIGHT
H-2	(2) 2 X 10	(3") B & (2) FULL HEIGHT
H-3	(3) 2 X 6	(1.5") B & (1) FULL HEIGHT
H-4	(3) 2 X 8	(3") B & (2) FULL HEIGHT
H-5	(3) 2 X 10	(3") B & (2) FULL HEIGHT
H-6	(3) 1.75 X 9.25 LVL	(WP-2) B & (2) FULL HEIGHT
H-7	(3) 1.75 X 11.25 LVL	(WP-2) B & (2) FULL HEIGHT
H-8	(3) 1.75 X 18.0 LVL	(3") B & (1) FULL HEIGHT

NOTE:
1. B INDICATES BEARING STUDS, TOTAL WIDTH OF SUPPORT.
2. PROVIDE 1/2" INSULATION BOARDS BETWEEN EXTERIOR HEADERS FOR FLITCH BEAM TO MAKE FULL 5.5" WIDTH.

WALL FRAMING SCHEDULE

LOCATION	SYP #2 TYP.			
	1ST FLR	2ND FLR	3RD FLR	4TH FLR
CORRIDOR	2x6 @ 16" O.C.	2x6 @ 16" O.C.	2x6 @ 16" O.C.	2x6 @ 16" O.C.
EXTERIOR	2x6 @ 16" O.C.	2x6 @ 16" O.C.	2x6 @ 16" O.C.	2x6 @ 16" O.C.
TENANT SEPARATION WALL	(2)2x4 @ 16" O.C.	(2)2x4 @ 16" O.C.	2x4 @ 16" O.C.	2x4 @ 16" O.C.
INTERIOR UNIT BEARING WALL	(3)2x4 @ 16" O.C.	(2)2x4 @ 16" O.C.	(2)2x4 @ 16" O.C.	2x4 @ 16" O.C.

– FINGER JOINTED STUDS ARE NOT ALLOWED.

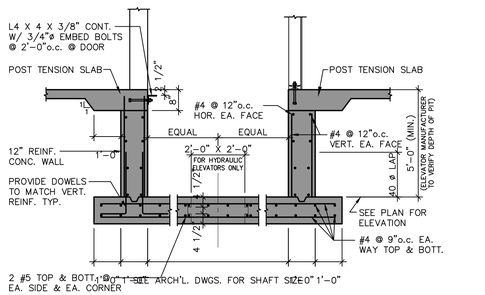

ELEVATOR PIT SECTION

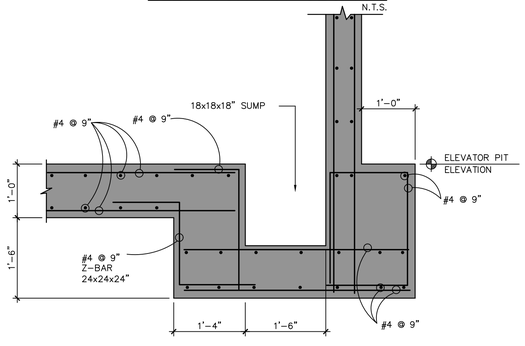

TYPICAL SUMP DETAIL
(AT SIDE WALL)

CONCRETE COVER SCHEDULE

CONCRETE CAST AGAINST AND PERMANENTLY EXPOSED TO EARTH:	3"
CONCRETE EXPOSED TO EARTH OR WEATHER:	
#6 OR LARGER	2"
#5 OR SMALLER	1 1/2"
CONCRETE NOT EXPOSED TO WEATHER OR IN CONTACT WITH GROUND:	
SLABS, WALLS, JOISTS (#11 AND SMALLER)	3/4"
BEAMS, COLUMNS (PRIMARY REINF., TIES, STIRRUPS, SPIRALS)	1 1/2"
CONCRETE FOR COASTAL EXPOSURES EXPOSED TO WEATHER:	
WALL & SLABS	2"
OTHER MEMBERS	2 1/2"

PLYWOOD SHEATHING NAILING SCHEDULE

ROOF AND WALL (NOT FOR SHEAR WALLS)

NAIL SIZE	NAIL SPACING	ZONE
8d (RING SHANK)	6" @ EDGES, 12" @ INTERMEDIATE SUPPORTS	ROOF (2) (3)
8d (RING SHANK)	6" @ EDGES, 12" @ INTERMEDIATE SUPPORTS	ROOF (1)
8d	6" @ EDGES, 12" @ INTERMEDIATE SUPPORTS	WALL (5)
8d	6" @ EDGES, 12" @ INTERMEDIATE SUPPORTS	WALL (4)

CORNER DISTANCE, A = 6.5 FEET

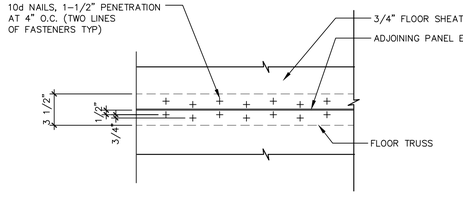

TYPICAL FLOOR SHEATING ATTACHMENT DETAIL

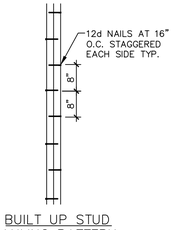

BUILT UP STUD NAILING PATTERN

U.S. DEPARTMENT OF HOUSING AND URBAN DEVELOPMENT

PERMIT REVIEW STAMP

ISSUE HISTORY

No.	Date	Description
1	07/21/17	DESIGN DEVELOPMENT
2	11/10/17	75%-90% REVIEW COORD. SET

REVISION HISTORY

No.	Date	Description

© 2017 These documents and their contents are the property of FUGLEBERG KOCH - AA26002103, and are issued only for the specific project noted on these drawings. Any reproductions, revisions, or modifications of these documents without the expressed written consent of Fugleberg Koch, is prohibited by law.

FUGLEBERG KOCH
2555 Temple Trail, Winter Park, FL 32789 (407) 629-0595
www.fuglebergkoch.com AA26002103

CONSULTANT
GUTHERMAN STRUCTURAL INC.
330 CROWN OAK CENTRE DR.
LONGWOOD FL 32750
P: 407.701.0875 LIC. #28863
Gutherman STRUCTURAL
John Gutherman Jr., P.E.
FL REG. #60880

SUMMER BAY APTS. II
LAKE COUNTY, FL

Drawn:	JRIVERA
Checked:	JGUTHERMAN
Approval:	JGUTHERMAN
Date:	Issue Date
Project #:	5389

SCHEDULES AND TYPICAL DETAILS

S2.02

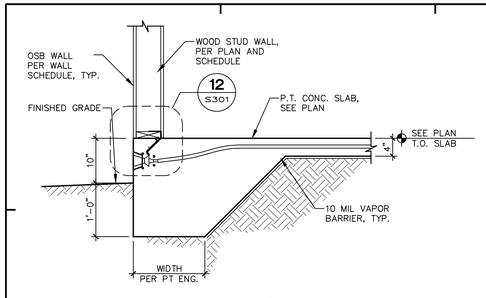

SECTION 1 S301
3/4" = 1'-0"

NOTE: COORDINATE EDGE OF SIDEWALK DETAIL W/ SITE/CIVIL DWGS, TYP.

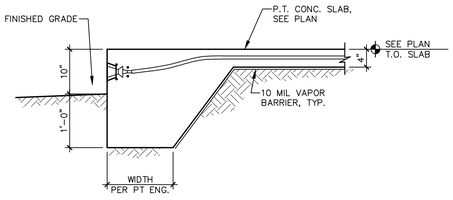

SECTION 2 S301
3/4" = 1'-0"

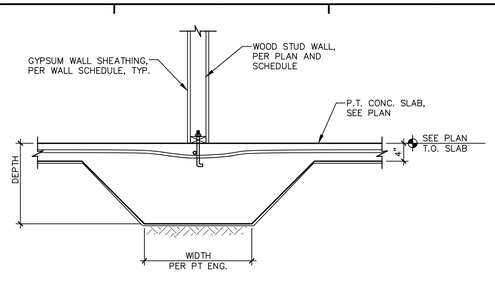

SECTION 3 S301
3/4" = 1'-0"

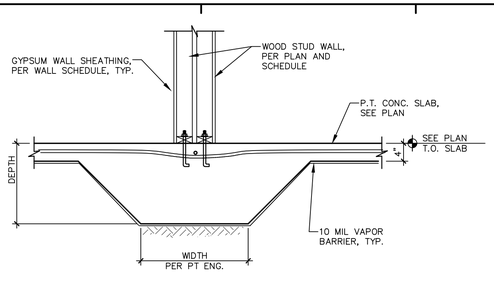

SECTION 4 S301
3/4" = 1'-0"

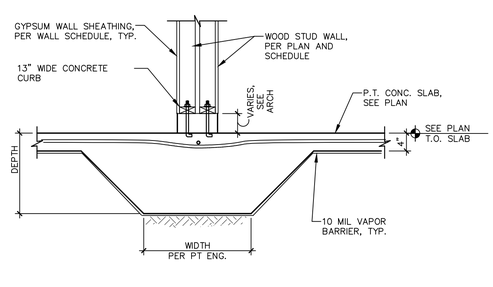

SECTION 5 S301
3/4" = 1'-0"

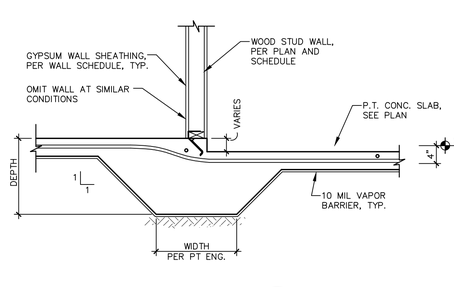

SECTION 6 S301
3/4" = 1'-0"

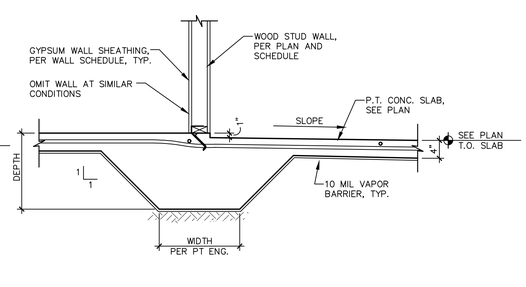

SECTION 7 S301
3/4" = 1'-0"

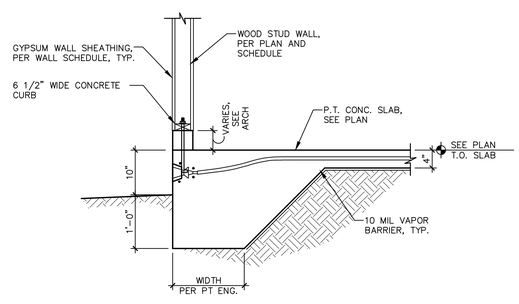

SECTION 8 S301
3/4" = 1'-0"

NOTE: TYPICAL EXTERIOR FOOTING AT GARAGE

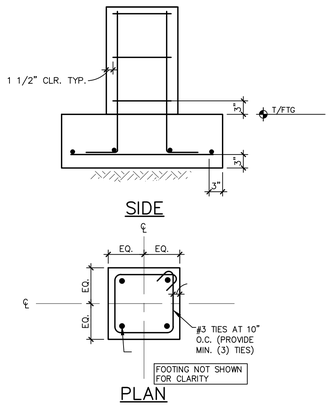

SECTION 9 S301
3/4" = 1'-0"

NOTE: COORDINATE EDGE OF SIDEWALK DETAIL W/ SITE/CIVIL DWGS, TYP.

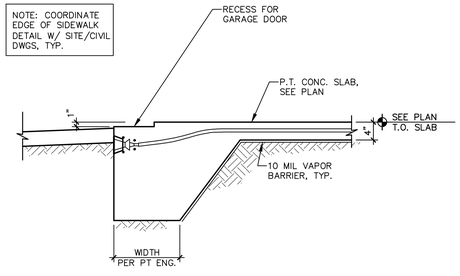

SECTION 10 S301
3/4" = 1'-0"

NOTE: THICKENED SLAB AT GARAGE

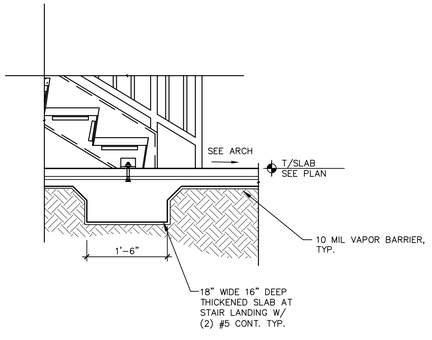

DETAIL 11 S301
1-1/2" = 1'-0"

NOTE: TYPICAL STAIR LANDING THICKENED SLAB

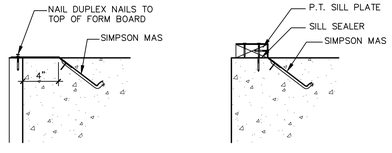

DETAIL 12 S301
1-1/2" = 1'-0"

NOTE: TYPICAL SIMPSON MAS INSTALL

U.S. DEPARTMENT OF HOUSING AND URBAN DEVELOPMENT

PERMIT REVIEW STAMP

ISSUE HISTORY

No.	Date	Description
1	07/21/17	DESIGN DEVELOPMENT
2	11/10/17	75%-90% REVIEW COORD. SET

REVISION HISTORY

No.	Date	Description

© 2017 These documents and their contents are the property of FUGLEBERG KOCH - AA26002103, and are issued only for the specific project noted on these drawings. Any reproductions, revisions, or modifications of these documents without the expressed written consent of Fugleberg Koch, is prohibited by law.

FUGLEBERG KOCH
2555 Temple Trail, Winter Park, FL 32789 (407) 629-0595
www.fuglebergkoch.com AA26002103

CONSULTANT
GUTHERMAN STRUCTURAL INC.
330 CROWN OAK CENTRE DR.
LONGWOOD FL 32750
P: 407.701.0875 LIC. #28863
Gutherman STRUCTURAL
John Gutherman Jr., P.E.
FL REG. #60880

SUMMER BAY APTS. II
LAKE COUNTY, FL

Drawn:	JRIVERA
Checked:	JGUTHERMAN
Approval:	JGUTHERMAN
Date:	Issue Date
Project #:	5389

FOUNDATION SECTIONS

S3.01

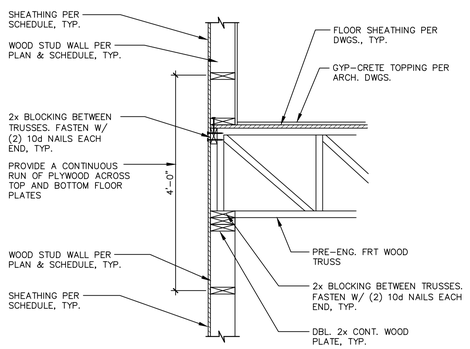

SECTION 1 — S3.02
3/4"=1'-0"

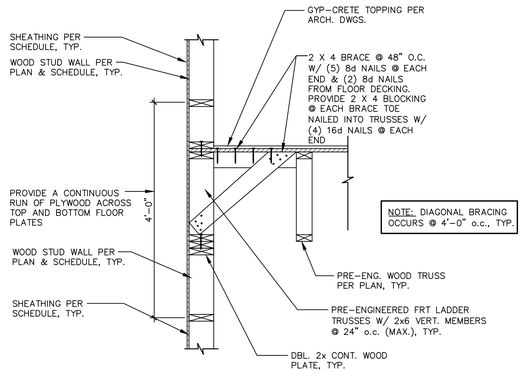

SECTION 2 — S3.02
3/4"=1'-0"

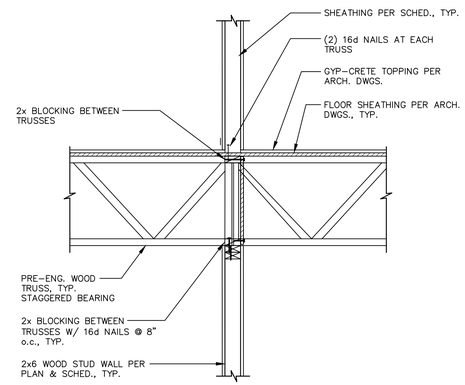

SECTION 3 — S3.02
3/4"=1'-0"

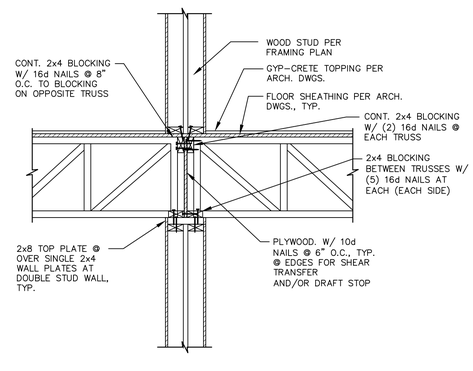

SECTION 4 — S3.02
3/4"=1'-0"

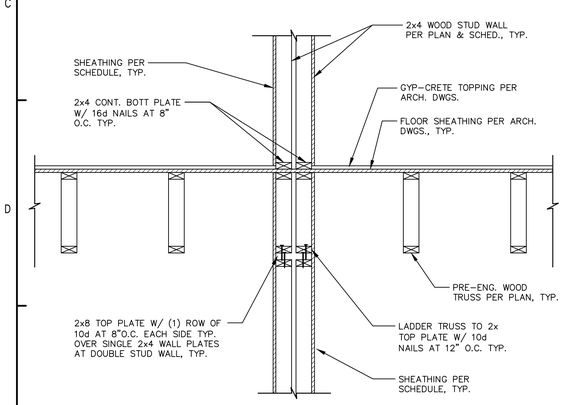

SECTION 5 — S3.02
3/4"=1'-0"

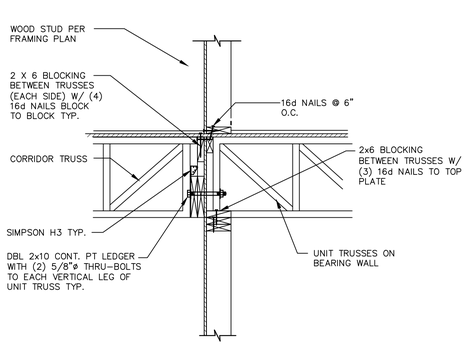

SECTION 6 — S3.02
3/4"=1'-0"

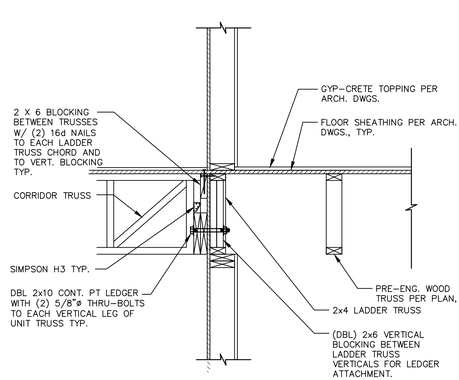

SECTION 7 — S3.02
3/4"=1'-0"

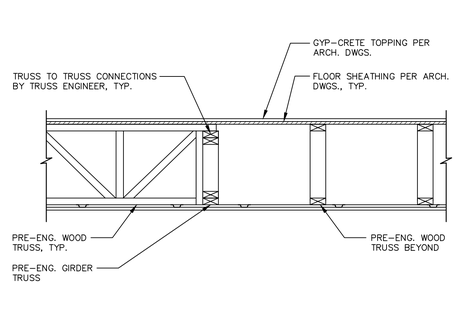

SECTION 8 — S3.02
3/4"=1'-0"

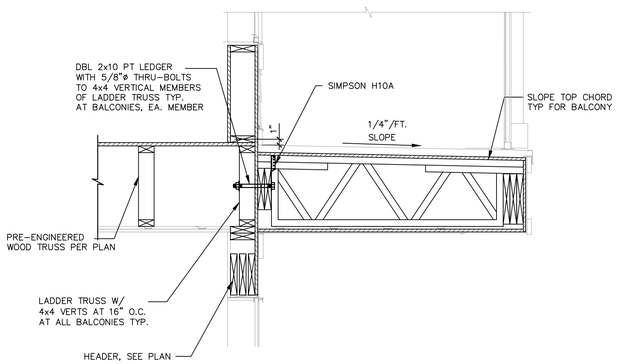

SECTION 9 — S3.02
3/4"=1'-0"

U.S. DEPARTMENT OF HOUSING AND URBAN DEVELOPMENT

PERMIT REVIEW STAMP

ISSUE HISTORY

No.	Date	Description
1	07/21/17	DESIGN DEVELOPMENT
2	11/10/17	75%-90% REVIEW COORD. SET

REVISION HISTORY

No.	Date	Description

© 2017 These documents and their contents are the property of FUGLEBERG KOCH - AA26002103, and are issued only for the specific project noted on these drawings. Any modifications, revisions, or reproductions of these documents without the expressed written consent of Fugleberg Koch, is prohibited by law.

FUGLEBERG KOCH
2555 Temple Trail, Winter Park, FL 32789 (407) 629-0595
www. fuglebergkoch.com AA26002103

CONSULTANT
GUTHERMAN STRUCTURAL INC.
130 CROWN OAK CENTRE DR.
LONGWOOD FL 32750
P: 407.701.0875 LIC. #28863
Gutherman STRUCTURAL
John Gutherman Jr., P.E.
FL. REG. #60880

SUMMER BAY APTS. II
LAKE COUNTY, FL

Drawn:	JRIVERA
Checked:	JGUTHERMAN
Approval:	JGUTHERMAN
Date:	Issue Date
Project #:	5389

STRUCTURAL FRAMING SECTIONS

S3.02

LEGEND

WIRING AND POWER

- S* — SWITCH
  - (NONE) SINGLE POLE TOGGLE SWITCH
  - 2 TWO POLE TOGGLE SWITCH
  - 3 THREE WAY TOGGLE SWITCH
  - WP SINGLE POLE WEATHERPROOF SWITCH
  - K SINGLE POLE KEYED SWITCH
  - OS OCCUPANCY SENSOR SWITCH
- Sabc — LOWER CASE LETTERS INDICATES SWITCHING DESIGNATIONS, QUANTITY OF LETTERS EQUAL QUANTITY OF GANGED SWITCHES
- * — SINGLE RECEPTACLE
  - GFI GROUND FAULT CIRCUIT INTERRUPTER
  - WP WEATHERPROOF
  - IG ISOLATED GROUND
  - C COUNTER HEIGHT (ABOVE COUNTER OR 42" AFF)
- * — DUPLEX RECEPTACLE
  - GFI GROUND FAULT CIRCUIT INTERRUPTER
  - WP WEATHERPROOF
  - IG ISOLATED GROUND
  - C COUNTER HEIGHT (ABOVE COUNTER OR 42" AFF)
  - EWC ELECTRIC WATER COOLER, COORDINATE LOCATION WITH PLUMBING CONTRACTOR
- * — QUADRAPLEX RECEPTACLE
  - GFI GROUND FAULT CIRCUIT INTERRUPTER
  - WP WEATHERPROOF
  - IG ISOLATED GROUND
  - C COUNTER HEIGHT (ABOVE COUNTER OR 42" AFF)
- * — SPECIAL RECEPTACLE
  - X TYPE X (SEE RECEPTACLE SCHEDULE)
  - C COUNTER HEIGHT
- PP — POWER POLE
- RECESSED FLOOR MOUNTED DUPLEX RECEPTACLE
- SURFACE–MOUNTED FLOOR DUPLEX RECEPTACLE
- CEILING–MOUNTED DUPLEX RECEPTACLE
- PLUG MOLD
  - C COUNTER HEIGHT
- J — JUNCTION BOX
- DISCONNECT SWITCH
- WP — DISCONNECT SWITCH – WEATHERPROOF (NEMA 3R)
- F — FUSED DISCONNECT SWITCH
- MAGNETIC MOTOR STARTER
- COMBINATION FUSED DISCONNECT/ MAGNETIC STARTER SWITCH
  - HOA HAND/OFF/AUTO
  - SS START/STOP
- M — MANUAL STARTER
- VSD — COMBINATION VARIABLE SPEED DRIVE AND DISCONNECT
- VSD — VARIABLE SPEED DRIVE
- EF–1 — MOTOR WITH DESIGNATOR
- TC — TIME CLOCK
- WH — WATER HEATER
- HVP1–6 — BRANCH CIRCUIT HOME RUN WITH PANEL NAME AND CIRCUIT NUMBER, QUANTITY OF ARROWHEADS DENOTES QUANTITY OF BRANCH CIRCUITS
- BRANCH CIRCUIT WIRING, PROVIDE QUANTITIES OF CONDUCTORS REQUIRED FOR CIRCUITING AND SWITCHING INDICATED
- POWER LEG ONLY (NO SWITCH LEG BETWEEN ROOMS)
- MUSHROOM HEAD PUSH BUTTON (EMERGENCY STOP)
- R — RELAY
- GROUND ROD
- T — TRANSFORMER
- TK — TYPE "K" TRANSFORMER
- UH — ELECTRIC UNIT HEATER (FURNISHED UNDER DIV 15 UNLESS NOTED OTHERWISE)

PANELS

- XXX — NEW ELECTRICAL PANEL
  - MDP MAIN DISTRIBUTION PANEL (SEE PANEL SCHEDULE)
  - TVSS TRANSIENT VOLTAGE SURGE SUPPRESSION
- ATS — AUTOMATIC TRANSFER SWITCH
- XXX — ELECTRICAL SYSTEMS PANEL
  - SACP SECURITY ALARM CONTROL PANEL
  - FACP FIRE ALARM CONTROL PANEL
  - MC MASTER CLOCK CONTROL PANEL
  - PA PUBLIC ADDRESS CONTROL PANEL
  - FAAP FIRE ALARM ANNUNCIATOR PANEL

LIGHTING

- XX — LIGHTING FIXTURE (SEE LIGHTING FIXTURE SCHEDULE FOR LETTER DESIGNATION AND DESCRIPTION OF FIXTURES)
- EMERGENCY/NIGHT LIGHT LIGHTING FIXTURE
- EXIT LIGHTING FIXTURE UNIVERSAL MOUNT, SINGLE/DOUBLE FACE (WHERE USED, ARROW INDICATES CHEVRON DIRECTION)
- BATTERY POWERED EMERGENCY LIGHT
- EMERGENCY LIGHT REMOTE HEAD
- TK — TRACK LIGHTING
- TRACK LIGHTING HEAD
- WG — WIRE CAGE LIGHT GUARD
- OS — OCCUPANCY SENSOR – CEILING MOUNTED
- OSC — OCCUPANCY SENSOR – CEILING MOUNTED – CORRIDOR
- OSW — OCCUPANCY SENSOR – WALL MOUNTED
- LC — LIGHTING CONTACTOR
- PC — PHOTOCELL
- S* — SWITCH
  - OS OCCUPANCY SENSOR SWITCH
  - D DIMMER
  - D3 THREE WAY DIMMER (INCANDESCENT)

TELECOM/SYSTEMS

- DATA/COMM OUTLET
- TV — TELVISION OUTLET
- S — SPEAKER
- V — VOLUME CONTROL
- CAMERA
- TELEPHONE OUTLET

FIRE ALARM SYSTEM

- S — SMOKE DETECTOR
- S CO — SMOKE/CARBON MONOXIDE DETECTOR

NOTE:

SYMBOLS SHOWN ON THIS ELECTRICAL LEGEND ARE FOR REFERENCE PURPOSES ONLY. ALL OF THESE SYMBOLS MAY NOT BE USED FOR THIS PROJECT.

ABBREVIATIONS

A	–	AMPERES
A/C	–	AIR CONDITIONING
AC	–	ALTERNATING CURRENT
AFF	–	ABOVE FINISHED FLOOR
AFG	–	ABOVE FINISHED GRADE
AHU	–	AIR HANDLING UNIT
AWG	–	AMERICAN WIRE GAUGE
C	–	CONDUIT
CFL	–	COMPACT FLUORESCENT LAMP
CH	–	COUNTER HEIGHT
CONC	–	CONCRETE
COND	–	CONDUIT
CU	–	COPPER
DISC	–	DISCONNECT
ECB	–	ENCLOSED CIRCUIT BREAKER
ELEC	–	ELECTRICAL
EM	–	EMERGENCY
EMS	–	ENERGY MANAGEMENT SYSTEM
EMT	–	ELECTRICAL METALLIC TUBING
EF	–	EXHAUST FAN
EWC	–	ELECTRIC WATER COOLER
ETR	–	EXISTING TO REMAIN
EX	–	EXISTING
FA	–	FIRE ALARM
FACP	–	FIRE ALARM CONTROL PANEL
FPL	–	FLORIDA POWER AND LIGHT
G	–	GROUND
GFI	–	GROUND FAULT INTERRUPTER
GND	–	GROUND
GRC	–	GALVANIZED RIGID CONDUIT
H.I.D.	–	HIGH INTENSITY DISCHARGE
HVAC	–	HEATING, VENTILATING AND AIR CONDITIONING
I.G.	–	ISOLATED GROUND
J	–	JUNCTION
KAIC	–	(THOUSAND) AMPERE INTERRUPTING CAPACITY
KVA	–	KILOVOLT–AMPERES
KW	–	KILOWATT
LTG	–	LIGHTING
MCM	–	THOUSANDS OF CIRCULAR MILS
MCU	–	MASTER CONTROL UNIT
MCP	–	MOTOR CIRCUIT PROTECTION
MH	–	METAL HALIDE
N	–	NEUTRAL
NA	–	NOT APPLICABLE
NF	–	NON–FUSED
NL	–	NIGHT LIGHT
NEC	–	NATIONAL ELECTRICAL CODE
NEMA	–	NATIONAL ELECTRICAL MANUFACTURERS ASSOCIATION
NFPA	–	NATIONAL FIRE PROTECTION ASSOCIATION
NIC	–	NOT IN CONTRACT
O.C.	–	ON CENTER
O.F.C.I.	–	OWNER FURNISHED CONTRACTOR INSTALLED
P	–	POLE
PNL	–	PANELBOARD
PVC	–	POLYVINYL CHLORIDE
RM	–	ROOM
RGS	–	RIGID GALVANIZED STEEL
SPEC	–	SPECIFICATION
SS	–	STAINLESS STEEL
TVSS	–	TRANSIENT VOLTAGE SURGE SUPPRESSION
TYP	–	TYPICAL
UON	–	UNLESS OTHERWISE NOTED
V	–	VOLTS
W	–	WIRE
WP	–	WEATHERPROOF

GENERAL NOTES

1) ALL WORK SHALL BE DONE IN ACCORDANCE WITH THE LATEST EDITION OF THE NATIONAL ELECTRICAL CODE (NFPA 70), AND STATE OF FLORIDA.

2) CONTRACTOR SHALL FIELD VERIFY ALL CONDITIONS AND COORDINATE WITH EXISTING EQUIPMENT PRIOR TO BIDDING.

3) ALL ELECTRICAL MATERIALS, DEVICES, APPLIANCES, AND EQUIPMENT SHALL BE LABEL LISTED BY AN APPROVED THIRD–PARTY TESTING AGENCY.

BUILDING:

4) INSTALLATION HEIGHT OF EQUIPMENT (TO CENTERLINE) ABOVE FINISHED FLOOR UNLESS NOTED OTHERWISE SHALL BE:

RECEPTACLE = 18"
CLOCK = 7'–6"
SWITCH = 44"
MODULAR JACK FOR WALL MOUNTED TELEPHONE = 52"
MODULAR TELEPHONE JACK = 18"
AUDIO/VISUAL FIRE ALARM INDICATORS = 80"
FIRE ALARM PULL STATIONS = 50"
TELEVISION OUTLET = 18"
COMPUTER OUTLET = 18"
CALL SWITCH = 44"
REMOTE TEST STATION FOR DUCT DETECTOR = 52"
C = ABOVE COUNTER BACKSPLASH, COORDINATE WITH ARCHITECTURAL ELEVATIONS AND MILLWORK.

5) ALL WIRING SHALL BE CONCEALED IN WALLS OR ABOVE CEILINGS UNLESS NOTED OTHERWISE OR APPROVED BY THE ARCHITECT/ENGINEER. ALL DEVICE OUTLET BOXES SHALL BE RECESSED UNLESS NOTED OTHERWISE OR APPROVED BY THE ARCHITECT/ENGINEER.

6) ALL CONDUIT ROUTES SHOWN ARE APPROXIMATE ONLY. CONTRACTOR SHALL FIELD VERIFY FINAL ROUTE.

7) CONDUIT RUNS SHOWN ARE SCHEMATIC AND DO NOT INDICATE THE NECESSARY FITTINGS AND JUNCTION BOXES THAT ARE INCLUDED IN THE SCOPE OF THE WORK.

8) CONTRACTOR SHALL PERMANENTLY IDENTIFY ALL WIRING WITH THE SOURCE AND CIRCUIT AT ALL ELECTRICAL EQUIPMENT, PULL AND JUNCTION BOXES AND ELECTRICAL TERMINATIONS PROVIDED OR ASSOCIATED WITH THIS CONSTRUCTION.

GROUNDING:

9) ALL METAL RACEWAYS, INCLUDING CONDUIT, WIRE TROUGHS, WIREMOLD, ETC., SHALL BE GROUNDED. ALL CONNECTIONS IN METAL RACEWAYS SHALL BE COMPLETED IN SUCH A MANNER AS TO MAINTAIN A CONTINUOUS PATH TO GROUND THROUGHOUT THE ENTIRE LENGTH OF THE RACEWAY.

WIRING:

10) UNLESS NOTED OTHERWISE ON THE DRAWINGS OR ON THE EQUIPMENT WIRING SCHEDULE, EACH BRANCH CIRCUIT HOME RUN SHALL BE THREE (3) #12 AWG THHN/THWN (1 HOT, 1 NEUTRAL & 1 EQUIPMENT GROUND) IN 3/4" EMT CONDUIT. PROTECT EACH CIRCUIT WITH A 20 AMPERE, 1–POLE OVERCURRENT DEVICE UNLESS NOTED OTHERWISE. COMBINED NEUTRALS ARE NOT PERMITTED.

11) THE USE OF ELECTRICAL 'NM' CABLE WIRING IS ACCEPTABLE WHERE ALLOWED BY CODE AND THE AUTHORITY HAVING JURISDICTION.

PERMIT REVIEW STAMP

ISSUE HISTORY

No.	Date	Description
1	10/06/2017	COORDINATION SET
2	11/10/2017	75%-90% REVIEW COORD. SET

REVISION HISTORY

No.	Date	Description

© 2015 These documents and their contents are the property of FUGLEBERG KOCH, P.L.C. +A2000133 - and are issued only for the specific project noted on these drawings. Any reproductions, revisions, or modifications of these documents without the expressed written consent of Fugleberg Koch, P.L.C. is prohibited by law.

FUGLEBERG KOCH
2555 Temple Trail, Winter Park, FL 32789 (407) 629-0595
www.fuglebergkoch.com BR569

CONSULTANT

Joseph, Lawrence & Co
Consulting Engineers
1180 HARWOOD AVE. SUITE 3000
ALTAMONTE SPRINGS, FLORIDA 32714
TEL: 321.972.4466
WWW.JLCENG.COM
CA NO. 28730

JLC 17.0137.00

Blake Lawrence Suddeth
P.E. #: 69060

SUMMER BAY APTS. II
LAKE COUNTY, FL

Drawn:	MJR/KCM
Checked:	BLS/AJB
Approval:	BLS/AJB
Date:	11/10/2017
Project #:	5389

SYMBOL LEGEND AND GENERAL NOTES

E0.01

LEGEND

X — BUILDING ID NUMBER
Y Z — NUMBER OF UNITS PER BUILDING
BUILDING TYPE

GENERAL NOTES:

A. DO NOT SCALE ELECTRICAL DRAWING FOR ANY DIMENSIONS.

B. ALL WORK SHALL COMPLY WITH THE 2011 NATIONAL ELECTRIC CODE, NATIONAL, STATE AND LOCAL CODES. PROVIDE GROUNDING AND BONDING PER NEC 250.

C. SEE SINGLE LINE DIAGRAM FOR FEEDER WIRE AND CONDUIT SIZE. ALL CIRCUITS NOT SIZED ON DRAWING SHALL BE INSTALLED TO MEET MINIMUM SIZE REQUIRED BY NEC. ALL CONDUCTORS SHALL HAVE AN EQUIPMENT GROUND WIRE SIZED PER NEC.

D. FIELD VERIFY EXACT LOCATION OF ALL DEVICES AND EQUIPMENT PRIOR TO ROUGH IN.

REFERENCE NOTES: X

1. REFER TO RESPECTIVE FLOOR PLANS, POWER RISER DIAGRAMS AND PANEL SCHEDULES FOR ADDITIONAL SERVICE INFORMATION.
2. UTILITY COMPANY TRANSFORMER; 120/208V, 3ø SECONDARY. TRANSFORMER LOCATIONS SHOWN IS PRELIMINARY. ELECTRICAL CONTRACTOR SHALL VERIFY EXACT LOCATION WITH LOCAL UTILITY COMPANY PRIOR TO ROUGH-IN.
3. PROVIDE IN GROUND WEATHERPROOF PULL BOX FOR CONNECTION OF GATE MOTOR. COORDINATE LOCATION AND CONNECTION REQUIREMENTS OF GATE MOTOR WITH GATE INSTALLER PRIOR TO ROUGH-IN AND PROVIDE AS REQUIRED.
4. PROVIDE IN GROUND WEATHERPROOF PULL BOX AND CONDUIT TO CONNECT GATE SENSOR TO GATE CONTROLLER. COORDINATE LOCATION AND CONNECTION REQUIREMENTS WITH GATE INSTALLER PRIOR TO ROUGH-IN.

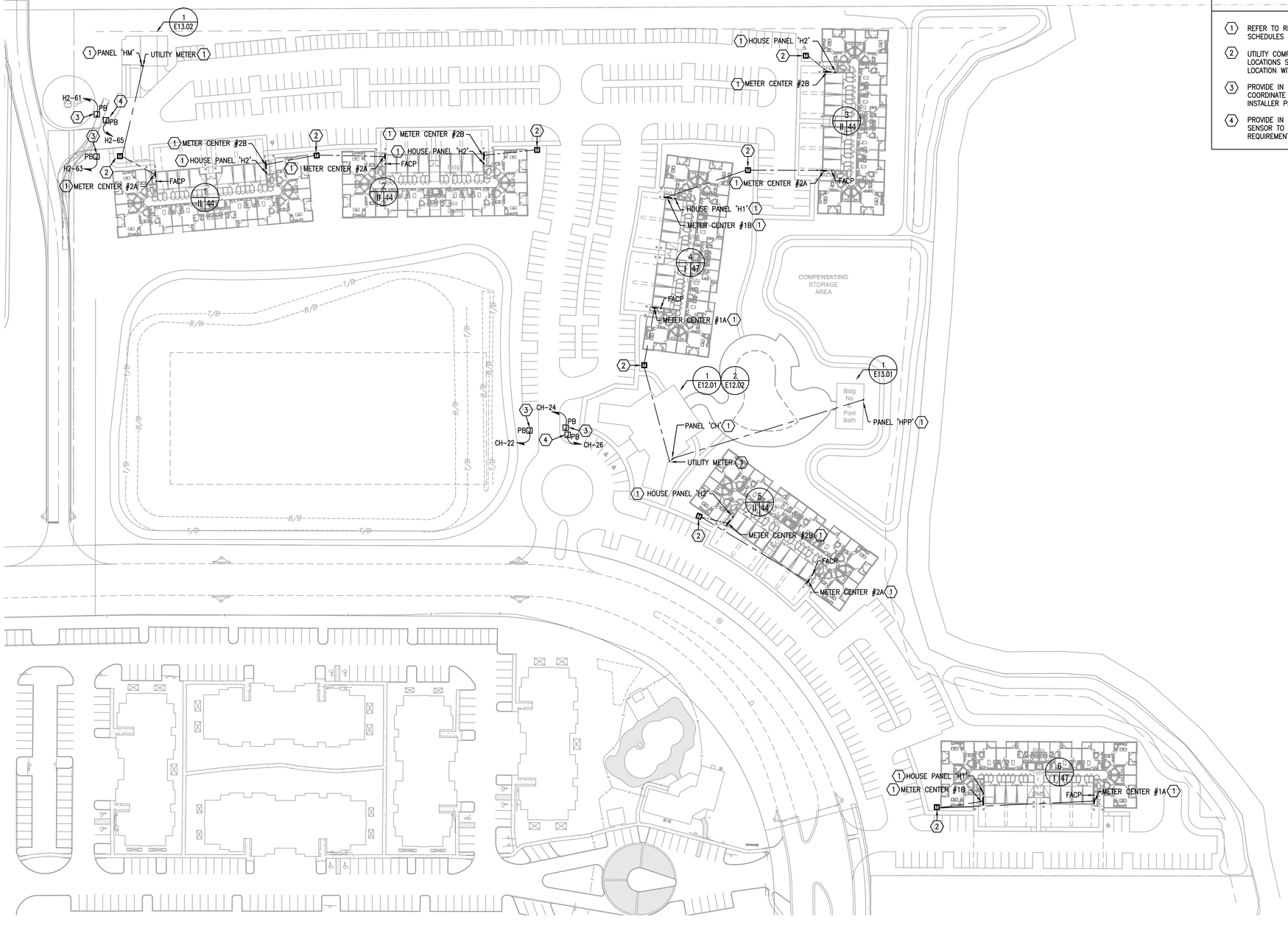

H1 SITE PLAN - ELECTRICAL
1" = 60'-0"

PERMIT REVIEW STAMP

ISSUE HISTORY

No.	Date	Description
1	10/06/2017	COORDINATION SET
2	11/10/2017	75%-90% REVIEW COORD. SET

REVISION HISTORY

No.	Date	Description

© 2015 These documents and their contents are the property of FUGLEBERG KOCH, PLLC - AA26002103, and are issued only for the specific project noted on these drawings. Any reproductions, revisions, or modifications of these documents without the expressed written consent of Fugleberg Koch, PLLC is prohibited by law.

FUGLEBERG KOCH
2555 Temple Trail, Winter Park, FL 32789 (407) 629-0595
www.fuglebergkoch.com BR569

CONSULTANT
Joseph, Lawrence & Co
Consulting Engineers
1180 HARWOOD AVE. SUITE 3000
ALTAMONTE SPRINGS, FLORIDA 32714
TEL: 321.972.4466
WWW.JLCENG.COM
CA NO. 28730

JLC 17.0137.00

Blake Lawrence Suddeth
P.E. #: 69060

SUMMER BAY APTS. II
LAKE COUNTY, FL

Drawn:	MJR/KCM
Checked:	BLS/AJB
Approval:	BLS/AJB
Date:	11/10/2017
Project #:	5389

SITE PLAN - ELECTRICAL

E1.01

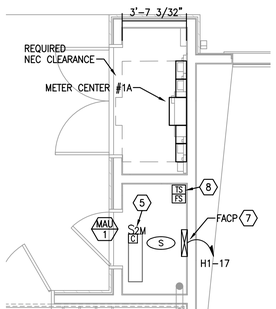

NOTE:
METER CLOSETS MC-1 AND MC-2 REQUIRE A MINIMUM WIDTH OF 3'-8" IN ORDER TO MEET REQUIRED N.E.C. CLEARANCES.

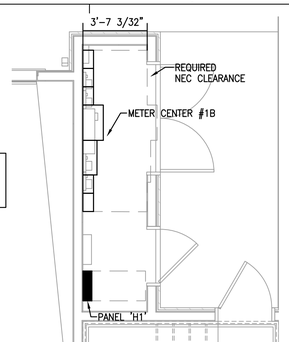

B1 ENLARGED ELECTRICAL PLAN - FIRE RISER / METER CLOSET
1/4" = 1'-0"

B4 ENLARGED ELECTRICAL PLAN - METER CLOSET
1/4" = 1'-0"

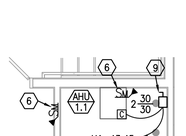

D1 ENLARGED ELECTRICAL PLAN - AC CLOSET
1/4" = 1'-0"

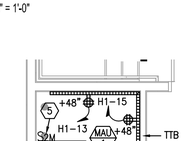

D4 ENLARGED ELECTRICAL PLAN - COMM/CABLE CLOSET
1/4" = 1'-0"

GENERAL NOTES:

A. DO NOT SCALE ELECTRICAL DRAWING FOR ANY DIMENSIONS.

B. ALL WORK SHALL COMPLY WITH THE 2011 NATIONAL ELECTRIC CODE, NATIONAL, STATE AND LOCAL CODES. PROVIDE GROUNDING AND BONDING PER NEC 250.

C. SEE SINGLE LINE DIAGRAM FOR FEEDER WIRE AND CONDUIT SIZE. ALL CIRCUITS NOT SIZED ON DRAWING SHALL BE INSTALLED TO MEET MINIMUM SIZE REQUIRED BY NEC. ALL CONDUCTORS SHALL HAVE AN EQUIPMENT GROUND WIRE SIZED PER NEC.

D. FIELD VERIFY EXACT LOCATION OF ALL DEVICES AND EQUIPMENT PRIOR TO ROUGH IN.

E. REFER TO ENLARGED TYPICAL UNIT PLANS FOR ALL ELECTRICAL IN UNITS.

REFERENCE NOTES: (X)

1. PROVIDE PUSHBUTTON CONTROL AND LOW VOLTAGE WIRING FOR GARAGE DOOR OPENER AS REQUIRED BY OWNER/MANUFACTURER.
2. PROVIDE 120V CEILING MOUNTED OUTLET FOR GARAGE DOOR OPENER. COORDINATE LOCATION WITH DOOR INSTALLER PRIOR TO ROUGH-IN. PROVIDE LOW VOLTAGE WIRING AND PUSH BUTTON LOCATED NEAR DOOR AS REQUIRED.
3. GARAGE EXHAUST FAN TO BE CONTROLLED BY CARBON MONOXIDE DETECTOR PROVIDED BY MECHANICAL CONTRACTOR.
4. PROVIDE 120V CONNECTION TO CARBON MONOXIDE SENSOR PROVIDED BY MECHANICAL CONTRACTOR. COORDINATE CONTROL WIRING WITH MECHANICAL CONTRACTOR AND PROVIDE AS REQUIRED. CONNECT TO LOCAL GARAGE CIRCUIT.
5. CONNECT INTERIOR MECHANICAL MINI-SPLIT UNIT THROUGH EXTERIOR UNIT LOCATED ON ROOF. CONNECT PER MANUFACTURER'S RECOMMENDATIONS, AND PROVIDE ALL CONTROL WIRING, CONDUIT, ETC. AS REQUIRED.
6. PROVIDE 120V CIRCUIT FOR CONNECTION OF FIRE/SMOKE DAMPER, CIRCUIT H1-59. COORDINATE LOCATION AND CONNECTION REQUIREMENTS WITH MECHANICAL CONTRACTOR PRIOR TO ROUGH-IN.
7. CONNECT FIRE ALARM CONTROL PANEL (FACP) TO HOUSE PANEL. PROVIDE 3/4"C. WITH #12 WIRE TO DUCT IN CLUBHOUSE FOR MONITORING, FIRE ALARM SYSTEM TO OPERATE DIALERS. PROVIDE SURGE SUPPRESSION ON HIGH AND LOW VOLTAGE, AND PHONE LINES FOR FIRE ALARM SYSTEMS. CONTRACTOR TO PROVIDE PHONE LOOP THRU PROJECT TO CLUBHOUSE FOR FIRE ALARMS FOR TWO PHONE LINES.
8. COORDINATE EXACT LOCATION OF TAMPER AND FLOW SWITCHES WITH FIRE PROTECTION DRAWINGS PRIOR TO ROUGH-IN.
9. ELECTRICAL CONTRACTOR SHALL COORDINATE DISCONNECT AND FUSE REQUIREMENTS FOR MECHANICAL UNIT WITH MECHANICAL CONTRACTOR AND EQUIPMENT MANUFACTURER PRIOR TO ROUGH-IN AND PROVIDE AS REQUIRED. COORDINATE LOCATION OF DISCONNECT WITH OWNER AND MECHANICAL CONTRACTOR PRIOR TO ROUGH-IN. LOCATE AS REQUIRED TO MAINTAIN NEC CLEARANCES.

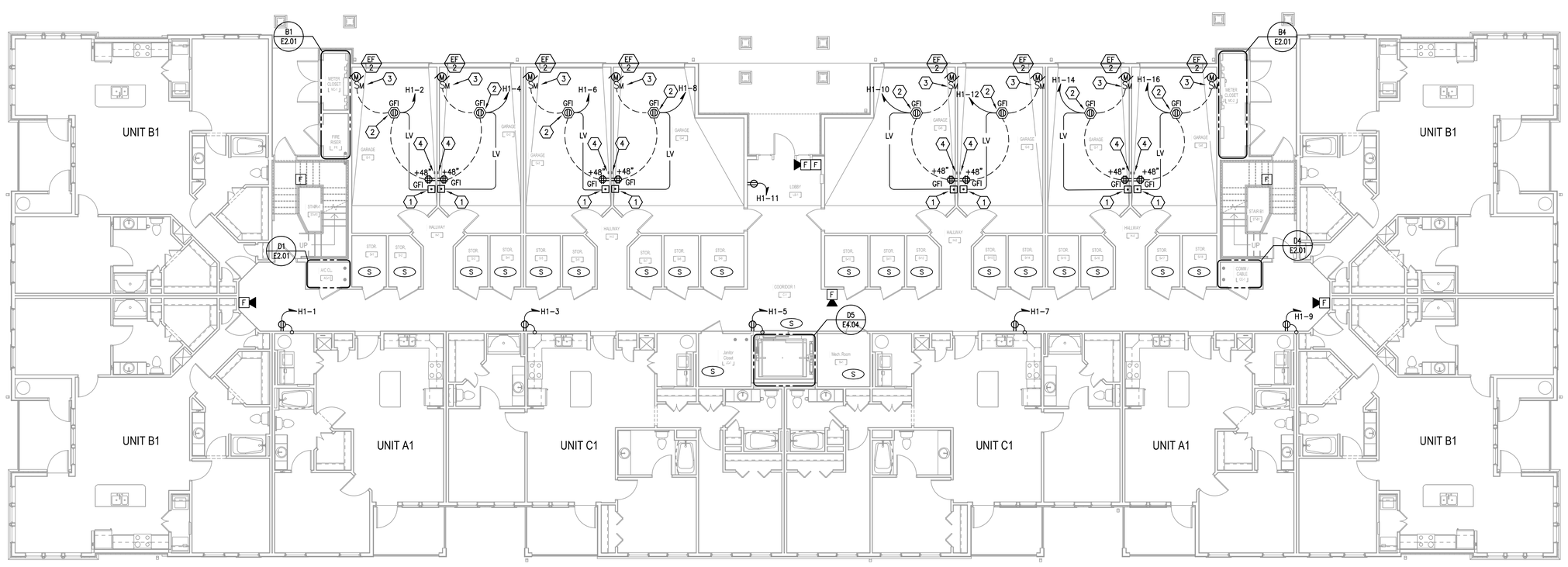

H1 BUILDING TYPE 1 - GROUND LEVEL - POWER & SYSTEMS
1/8" = 1'-0"

PERMIT REVIEW STAMP

ISSUE HISTORY

No.	Date	Description
1	10/06/2017	COORDINATION SET
2	11/10/2017	75%-90% REVIEW COORD. SET

REVISION HISTORY

No.	Date	Description

© 2015 These documents and their contents are the property of FUGLEBERG KOCH, P.L.C. - LA0000103 - and are issued only for the specific project noted on these drawings. Any reproductions, revisions, or modifications of these documents without the expressed written consent of Fugleberg Koch, P.L.C. is prohibited by law.

FUGLEBERG KOCH
2555 Temple Trail, Winter Park, FL 32789 (407) 629-0595
www.fuglebergkoch.com BR569

CONSULTANT
Joseph, Lawrence & Co
Consulting Engineers
1180 HAIRWOOD AVE. SUITE 3000
ALTAMONTE SPRINGS, FLORIDA 32714
TEL: 321.972.4466
WWW.JLCENG.COM
CA NO. 28730

JLC 17.0137.00

Blake Joseph Lawrence Bardsley
P.E. #: 69024

SUMMER BAY APTS. II
LAKE COUNTY, FL

Drawn:	MJR/KCM
Checked:	BLS/AJB
Approval:	BLS/AJB
Date:	11/10/2017
Project #:	5389

BUILDING TYPE 1 - GROUND FLOOR PLAN - PWR. & SYS.

E2.01

GENERAL NOTES:

A. DO NOT SCALE ELECTRICAL DRAWING FOR ANY DIMENSIONS.

B. ALL WORK SHALL COMPLY WITH THE 2011 NATIONAL ELECTRIC CODE, NATIONAL, STATE AND LOCAL CODES. PROVIDE GROUNDING AND BONDING PER NEC 250.

C. SEE SINGLE LINE DIAGRAM FOR FEEDER WIRE AND CONDUIT SIZE. ALL CIRCUITS NOT SIZED ON DRAWING SHALL BE INSTALLED TO MEET MINIMUM SIZE REQUIRED BY NEC. ALL CONDUCTORS SHALL HAVE AN EQUIPMENT GROUND WIRE SIZED PER NEC.

D. FIELD VERIFY EXACT LOCATION OF ALL DEVICES AND EQUIPMENT PRIOR TO ROUGH IN.

E. REFER TO ENLARGED TYPICAL UNIT PLANS FOR ALL ELECTRICAL IN UNITS.

REFERENCE NOTES: (X)

1. PROVIDE 120V CIRCUIT FOR CONNECTION OF FIRE/SMOKE DAMPER, CIRCUIT H1-59. COORDINATE LOCATION AND CONNECTION REQUIREMENTS WITH MECHANICAL CONTRACTOR PRIOR TO ROUGH-IN.
2. ELECTRICAL CONTRACTOR SHALL COORDINATE DISCONNECT AND FUSE REQUIREMENTS FOR MECHANICAL UNIT WITH MECHANICAL CONTRACTOR AND EQUIPMENT MANUFACTURER PRIOR TO ROUGH-IN AND PROVIDE AS REQUIRED. COORDINATE LOCATION OF DISCONNECT WITH OWNER AND MECHANICAL CONTRACTOR PRIOR TO ROUGH-IN. LOCATE AS REQUIRED TO MAINTAIN NEC CLEARANCES.
3. PROVIDE AREA OF REFUGE TWO-WAY COMMUNICATION SYSTEM AND CABLING TO MAIN BASE STATION AS REQUIRED BY 2012 IBC AND LIFE SAFETY CODE. COORDINATE LOCATION WITH OWNER AND AUTHORITY HAVING JURISDICTION PRIOR TO ROUGH-IN.

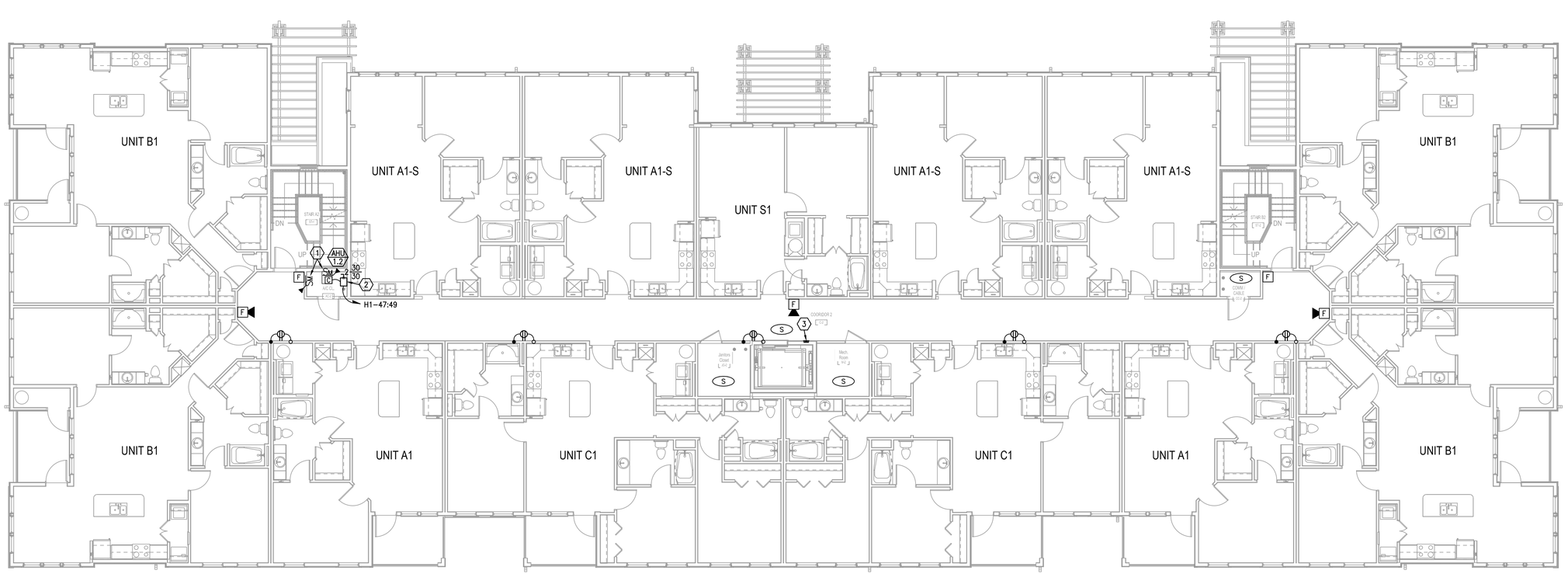

H1 BUILDING TYPE 1 - LEVEL 2 - POWER & SYSTEMS
1/8" = 1'-0"

PERMIT REVIEW STAMP

ISSUE HISTORY

No.	Date	Description
1	10/06/2017	COORDINATION SET
2	11/10/2017	75%-90% REVIEW COORD. SET

REVISION HISTORY

No.	Date	Description

FUGLEBERG KOCH
2555 Temple Trail, Winter Park, FL 32789 (407) 629-0595
www.fuglebergkoch.com BR569

CONSULTANT
Joseph, Lawrence & Co
Consulting Engineers
1180 HARWOOD AVE. SUITE 3000
ALTAMONTE SPRINGS, FLORIDA 32714
TEL: 321.972.4466
WWW.JLCENG.COM
CA NO. 28730

JLC 17.0137.00

Blake Lawrence Suddeth
P.E. #: 69060

SUMMER BAY APTS. II
LAKE COUNTY, FL

Drawn:	MJR/KCM
Checked:	BLS/AJB
Approval:	BLS/AJB
Date:	11/10/2017
Project #:	5389

BUILDING TYPE 1 - LEVEL 2
PLAN - PWR. & SYS.

E2.02

© 2015 These documents and their contents are the property of FUGLEBERG KOCH, PLLC - AA26002103, and are issued only for the specific project noted on these drawings. Any reproductions, revisions, or modifications of these documents without the expressed written consent of Fugleberg Koch, PLLC is prohibited by law.

GENERAL NOTES:

A. DO NOT SCALE ELECTRICAL DRAWING FOR ANY DIMENSIONS.

B. ALL WORK SHALL COMPLY WITH THE 2011 NATIONAL ELECTRIC CODE, NATIONAL, STATE AND LOCAL CODES. PROVIDE GROUNDING AND BONDING PER NEC 250.

C. SEE SINGLE LINE DIAGRAM FOR FEEDER WIRE AND CONDUIT SIZE. ALL CIRCUITS NOT SIZED ON DRAWING SHALL BE INSTALLED TO MEET MINIMUM SIZE REQUIRED BY NEC. ALL CONDUCTORS SHALL HAVE AN EQUIPMENT GROUND WIRE SIZED PER NEC.

D. FIELD VERIFY EXACT LOCATION OF ALL DEVICES AND EQUIPMENT PRIOR TO ROUGH IN.

E. REFER TO ENLARGED TYPICAL UNIT PLANS FOR ALL ELECTRICAL IN UNITS.

REFERENCE NOTES: (X)

1. PROVIDE 120V CIRCUIT FOR CONNECTION OF FIRE/SMOKE DAMPER, CIRCUIT H1-59. COORDINATE LOCATION AND CONNECTION REQUIREMENTS WITH MECHANICAL CONTRACTOR PRIOR TO ROUGH-IN.
2. ELECTRICAL CONTRACTOR SHALL COORDINATE DISCONNECT AND FUSE REQUIREMENTS FOR MECHANICAL UNIT WITH MECHANICAL CONTRACTOR AND EQUIPMENT MANUFACTURER PRIOR TO ROUGH-IN AND PROVIDE AS REQUIRED. COORDINATE LOCATION OF DISCONNECT WITH OWNER AND MECHANICAL CONTRACTOR PRIOR TO ROUGH-IN. LOCATE AS REQUIRED TO MAINTAIN NEC CLEARANCES.
3. PROVIDE AREA OF REFUGE TWO-WAY COMMUNICATION SYSTEM AND CABLING TO MAIN BASE STATION AS REQUIRED BY 2012 IBC AND LIFE SAFETY CODE. COORDINATE LOCATION WITH OWNER AND AUTHORITY HAVING JURISDICTION PRIOR TO ROUGH-IN.

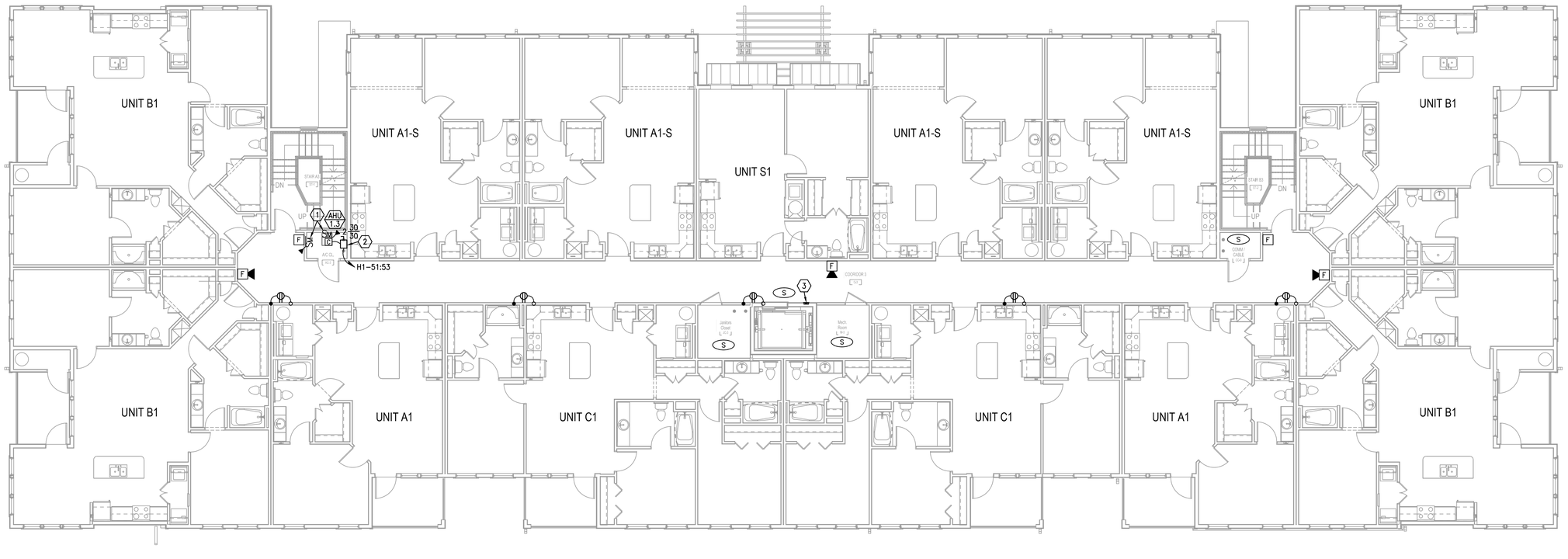

H1 BUILDING TYPE 1 - LEVEL 3 - POWER & SYSTEMS
1/8" = 1'-0"

PERMIT REVIEW STAMP

ISSUE HISTORY

No.	Date	Description
1	10/06/2017	COORDINATION SET
2	11/10/2017	75%-90% REVIEW COORD. SET

REVISION HISTORY

No.	Date	Description

FUGLEBERG KOCH
2555 Temple Trail, Winter Park, FL 32789 (407) 629-0595
www.fuglebergkoch.com BR569

CONSULTANT
Joseph, Lawrence & Co
Consulting Engineers
1180 HARWOOD AVE. SUITE 3000
ALTAMONTE SPRINGS, FLORIDA 32714
TEL: 321.972.4466
WWW.JLCENG.COM
CA NO. 28730

JLC 17.0137.00

Blake Lawrence Suddeth
P.E. #: 69060

SUMMER BAY APTS. II
LAKE COUNTY, FL

Drawn:	MJR/KCM
Checked:	BLS/AJB
Approval:	BLS/AJB
Date:	11/10/2017
Project #:	5389

BUILDING TYPE 1 - LEVEL 3 PLAN - PWR. & SYS.

E2.03

© 2015 These documents and their contents are the property of FUGLEBERG KOCH, PLLC - AA26002103, and are issued only for the specific project noted on these drawings. Any reproductions, revisions, or modifications of these documents without the expressed written consent of Fugleberg Koch, PLLC is prohibited by law.

GENERAL NOTES:

A. DO NOT SCALE ELECTRICAL DRAWING FOR ANY DIMENSIONS.

B. ALL WORK SHALL COMPLY WITH THE 2011 NATIONAL ELECTRIC CODE, NATIONAL, STATE AND LOCAL CODES. PROVIDE GROUNDING AND BONDING PER NEC 250.

C. SEE SINGLE LINE DIAGRAM FOR FEEDER WIRE AND CONDUIT SIZE. ALL CIRCUITS NOT SIZED ON DRAWING SHALL BE INSTALLED TO MEET MINIMUM SIZE REQUIRED BY NEC. ALL CONDUCTORS SHALL HAVE AN EQUIPMENT GROUND WIRE SIZED PER NEC.

D. FIELD VERIFY EXACT LOCATION OF ALL DEVICES AND EQUIPMENT PRIOR TO ROUGH IN.

E. REFER TO ENLARGED TYPICAL UNIT PLANS FOR ALL ELECTRICAL IN UNITS.

REFERENCE NOTES: (X)

1. PROVIDE 120V CIRCUIT FOR CONNECTION OF FIRE/SMOKE DAMPER, CIRCUIT H1-59. COORDINATE LOCATION AND CONNECTION REQUIREMENTS WITH MECHANICAL CONTRACTOR PRIOR TO ROUGH-IN.

2. ELECTRICAL CONTRACTOR SHALL COORDINATE DISCONNECT AND FUSE REQUIREMENTS FOR MECHANICAL UNIT WITH MECHANICAL CONTRACTOR AND EQUIPMENT MANUFACTURER PRIOR TO ROUGH-IN AND PROVIDE AS REQUIRED. COORDINATE LOCATION OF DISCONNECT WITH OWNER AND MECHANICAL CONTRACTOR PRIOR TO ROUGH-IN. LOCATE AS REQUIRED TO MAINTAIN NEC CLEARANCES.

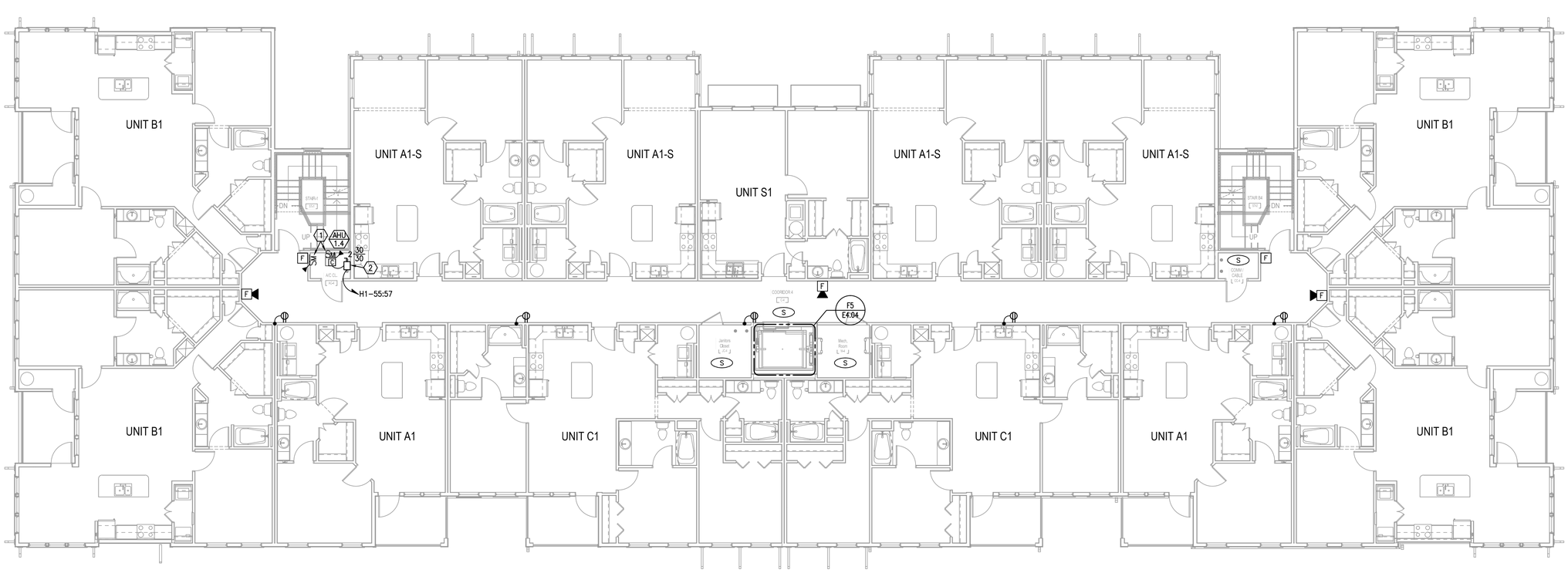

H1 BUILDING TYPE 1 - LEVEL 4 - POWER & SYSTEMS
1/8" = 1'-0"

PERMIT REVIEW STAMP

ISSUE HISTORY

No.	Date	Description
1	10/06/2017	COORDINATION SET
2	11/10/2017	75%-90% REVIEW COORD. SET

REVISION HISTORY

No.	Date	Description

FUGLEBERG KOCH
2555 Temple Trail, Winter Park, FL 32789 (407) 629-0595
www.fuglebergkoch.com BR569

CONSULTANT
Joseph, Lawrence & Co
Consulting Engineers
1180 HARWOOD AVE. SUITE 3000
ALTAMONTE SPRINGS, FLORIDA 32714
TEL: 321.972.4466
WWW.JLCENG.COM
CA NO. 28730

JLC 17.0137.00

Blake Lawrence Suddeth
P.E. #: 69060

SUMMER BAY APTS. II
LAKE COUNTY, FL

Drawn:	MJR/KCM
Checked:	BLS/AJB
Approval:	BLS/AJB
Date:	11/10/2017
Project #:	5389

BUILDING TYPE 1 - LEVEL 4
PLAN - PWR. & SYS.

E2.04

© 2015 These documents and their contents are the property of FUGLEBERG KOCH, PLLC - AA26002103, and are issued only for the specific project noted on these drawings. Any reproductions, revisions, or modifications of these documents without the expressed written consent of Fugleberg Koch, PLLC is prohibited by law.

GENERAL NOTES:

A. DO NOT SCALE ELECTRICAL DRAWING FOR ANY DIMENSIONS.

B. ALL WORK SHALL COMPLY WITH THE 2011 NATIONAL ELECTRIC CODE, NATIONAL, STATE AND LOCAL CODES. PROVIDE GROUNDING AND BONDING PER NEC 250.

C. SEE SINGLE LINE DIAGRAM FOR FEEDER WIRE AND CONDUIT SIZE. ALL CIRCUITS NOT SIZED ON DRAWING SHALL BE INSTALLED TO MEET MINIMUM SIZE REQUIRED BY NEC. ALL CONDUCTORS SHALL HAVE AN EQUIPMENT GROUND WIRE SIZED PER NEC.

D. FIELD VERIFY EXACT LOCATION OF ALL DEVICES AND EQUIPMENT PRIOR TO ROUGH IN.

E. REFER TO ENLARGED TYPICAL UNIT PLANS FOR ALL ELECTRICAL IN UNITS.

REFERENCE NOTES: (X)

(1) ELECTRICAL CONTRACTOR SHALL COORDINATE DISCONNECT AND FUSE REQUIREMENTS FOR MECHANICAL UNIT WITH MECHANICAL CONTRACTOR AND EQUIPMENT MANUFACTURER PRIOR TO ROUGH-IN AND PROVIDE AS REQUIRED. CONNECT CONDENSING UNIT TO CORRESPONDING UNIT PANEL, REFER TO TYPICAL PLANS AND SCHEDULES FOR CIRCUITING AND SIZING INFORMATION. COORDINATE LOCATION OF DISCONNECT WITH OWNER AND MECHANICAL CONTRACTOR PRIOR TO ROUGH-IN. LOCATE AS REQUIRED TO MAINTAIN NEC CLEARANCES.

(2) ELECTRICAL CONTRACTOR SHALL COORDINATE DISCONNECT AND FUSE REQUIREMENTS FOR MECHANICAL UNIT WITH MECHANICAL CONTRACTOR AND EQUIPMENT MANUFACTURER PRIOR TO ROUGH-IN AND PROVIDE AS REQUIRED. COORDINATE LOCATION OF DISCONNECT WITH OWNER AND MECHANICAL CONTRACTOR PRIOR TO ROUGH-IN. LOCATE AS REQUIRED TO MAINTAIN NEC CLEARANCES.

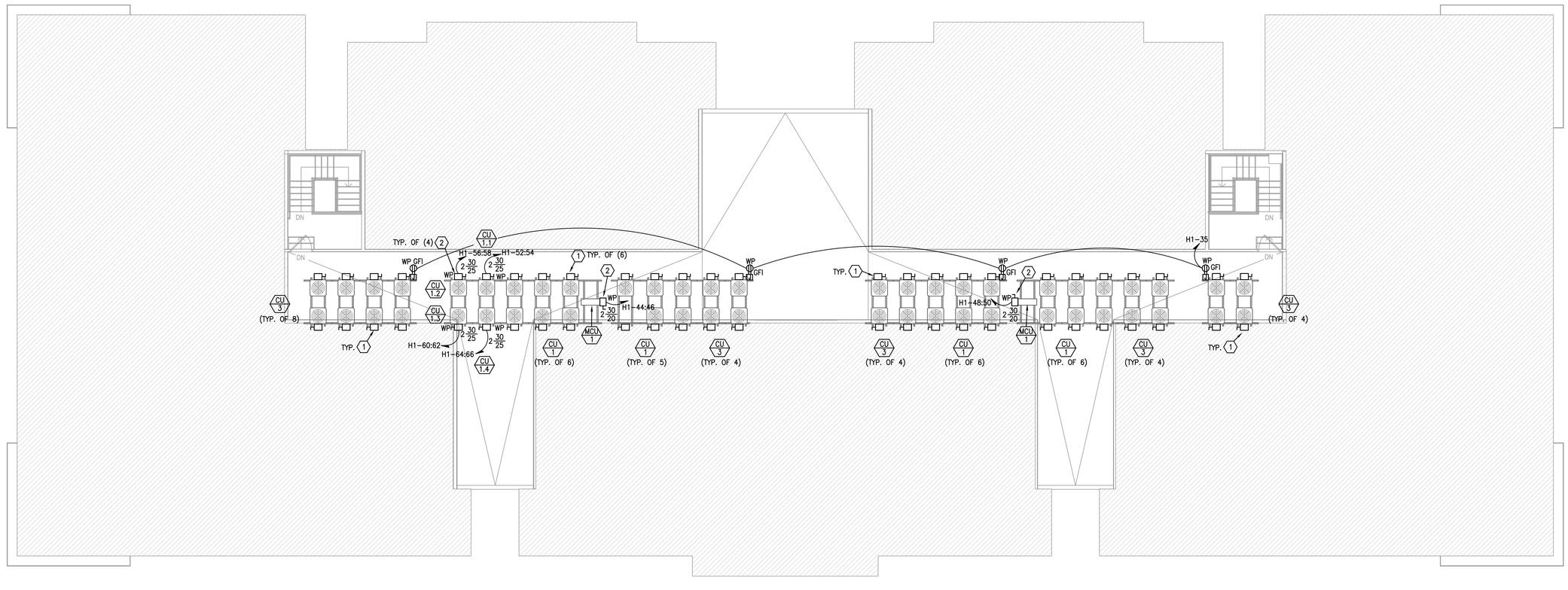

H1 BUILDING TYPE 1 - ROOF - ELECTRICAL
1/8" = 1'-0"

PERMIT REVIEW STAMP

ISSUE HISTORY

No.	Date	Description
1	10/06/2017	COORDINATION SET
2	11/10/2017	75%-90% REVIEW COORD. SET

REVISION HISTORY

No.	Date	Description

© 2015 These documents and their contents are the property of FUGLEBERG KOCH, PLLC - AA26002103, and are issued only for the specific project noted on these drawings. Any reproductions, revisions, or modifications of these documents without the expressed written consent of Fugleberg Koch, PLLC is prohibited by law.

FUGLEBERG KOCH
2555 Temple Trail, Winter Park, FL 32789 (407) 629-0595
www.fuglebergkoch.com BR569

CONSULTANT
Joseph, Lawrence & Co
Consulting Engineers
1180 HARWOOD AVE. SUITE 3000
ALTAMONTE SPRINGS, FLORIDA 32714
TEL: 321.972.4466
WWW.JLCENG.COM
CA NO. 28730

JLC 17.0137.00

Blake Lawrence Suddeth
P.E. #: 69060

SUMMER BAY APTS. II
LAKE COUNTY, FL

Drawn:	MJR/KCM
Checked:	BLS/AJB
Approval:	BLS/AJB
Date:	11/10/2017
Project #:	5389

BUILDING TYPE 1 - ROOF - ELECTRICAL

E2.05

GENERAL NOTES:

A. DO NOT SCALE ELECTRICAL DRAWING FOR ANY DIMENSIONS.

B. ALL WORK SHALL COMPLY WITH THE 2011 NATIONAL ELECTRIC CODE, NATIONAL, STATE AND LOCAL CODES. PROVIDE GROUNDING AND BONDING PER NEC 250.

C. SEE SINGLE LINE DIAGRAM FOR FEEDER WIRE AND CONDUIT SIZE. ALL CIRCUITS NOT SIZED ON DRAWING SHALL BE INSTALLED TO MEET MINIMUM SIZE REQUIRED BY NEC. ALL CONDUCTORS SHALL HAVE AN EQUIPMENT GROUND WIRE SIZED PER NEC.

D. FIELD VERIFY EXACT LOCATION OF ALL DEVICES AND EQUIPMENT PRIOR TO ROUGH IN.

E. REFER TO ENLARGED TYPICAL UNIT PLANS FOR ALL ELECTRICAL IN UNITS.

REFERENCE NOTES: (X)

(1) COORDINATE MOUNTING HEIGHT AND LOCATION OF FIXTURE OVER STAIR WITH ARCHITECT PRIOR TO ROUGH-IN.

(2) CONNECT LIGHT FIXTURES VIA PHOTOCELL FOR AUTOMATIC CONTROL OF FIXTURES.

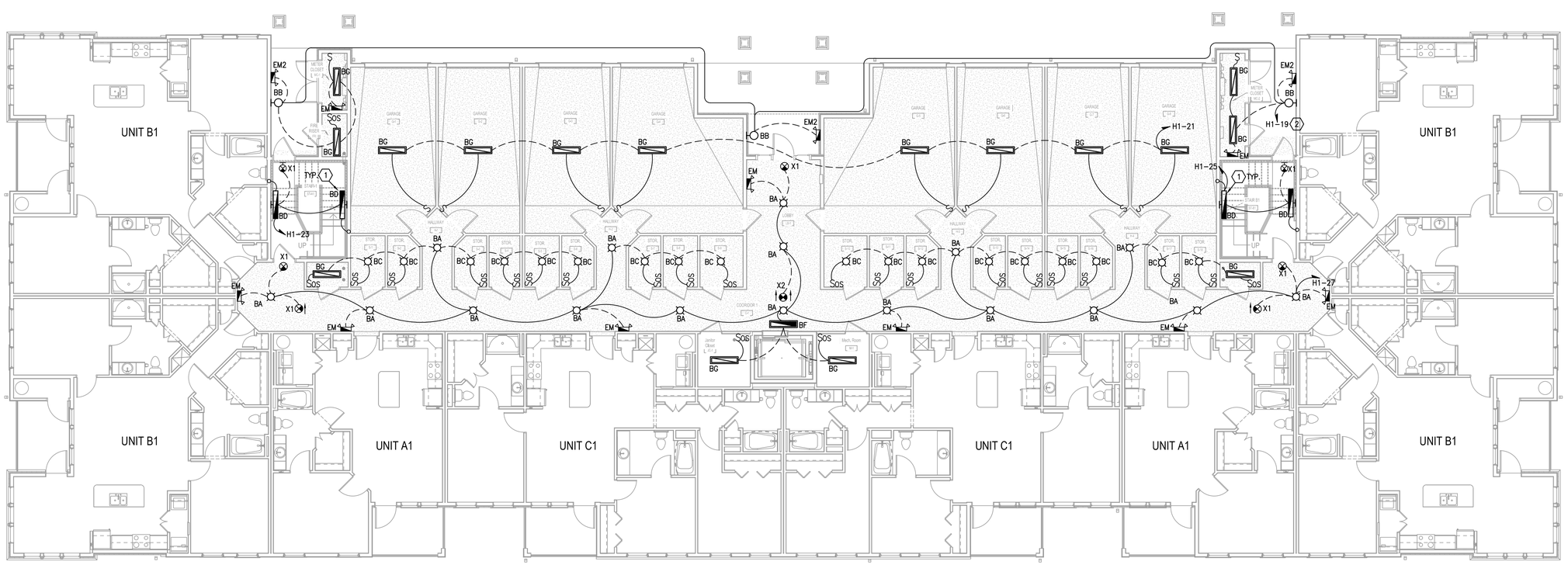

H1 BUILDING TYPE 1 - GROUND LEVEL - LIGHTING
1/8" = 1'-0"

PERMIT REVIEW STAMP

ISSUE HISTORY

No.	Date	Description
1	10/06/2017	COORDINATION SET
2	11/10/2017	75%-90% REVIEW COORD. SET

REVISION HISTORY

No.	Date	Description

© 2015 These documents and their contents are the property of FUGLEBERG KOCH, PLLC - AA26002103, and are issued only for the specific project noted on these drawings. Any reproductions, revisions, or modifications of these documents without the expressed written consent of Fugleberg Koch, PLLC is prohibited by law.

FUGLEBERG KOCH
2555 Temple Trail, Winter Park, FL 32789 (407) 629-0595
www.fuglebergkoch.com BR569

CONSULTANT
Joseph, Lawrence & Co
Consulting Engineers
1180 HARWOOD AVE. SUITE 3000
ALTAMONTE SPRINGS, FLORIDA 32714
TEL: 321.972.4466
WWW.JLCENG.COM
CA NO. 28730

JLC 17.0137.00

Blake Lawrence Suddeth
P.E. #: 69060

SUMMER BAY APTS. II
LAKE COUNTY, FL

Drawn:	MJR/KCM
Checked:	BLS/AJB
Approval:	BLS/AJB
Date:	11/10/2017
Project #:	5389

BUILDING TYPE 1 - GROUND FLOOR PLAN - LIGHTING

E2.06

GENERAL NOTES:

A. DO NOT SCALE ELECTRICAL DRAWING FOR ANY DIMENSIONS.

B. ALL WORK SHALL COMPLY WITH THE 2011 NATIONAL ELECTRIC CODE, NATIONAL, STATE AND LOCAL CODES. PROVIDE GROUNDING AND BONDING PER NEC 250.

C. SEE SINGLE LINE DIAGRAM FOR FEEDER WIRE AND CONDUIT SIZE. ALL CIRCUITS NOT SIZED ON DRAWING SHALL BE INSTALLED TO MEET MINIMUM SIZE REQUIRED BY NEC. ALL CONDUCTORS SHALL HAVE AN EQUIPMENT GROUND WIRE SIZED PER NEC.

D. FIELD VERIFY EXACT LOCATION OF ALL DEVICES AND EQUIPMENT PRIOR TO ROUGH IN.

E. REFER TO ENLARGED TYPICAL UNIT PLANS FOR ALL ELECTRICAL IN UNITS.

REFERENCE NOTES: (X)

(1) COORDINATE MOUNTING HEIGHT AND LOCATION OF FIXTURE OVER STAIR WITH ARCHITECT PRIOR TO ROUGH-IN.

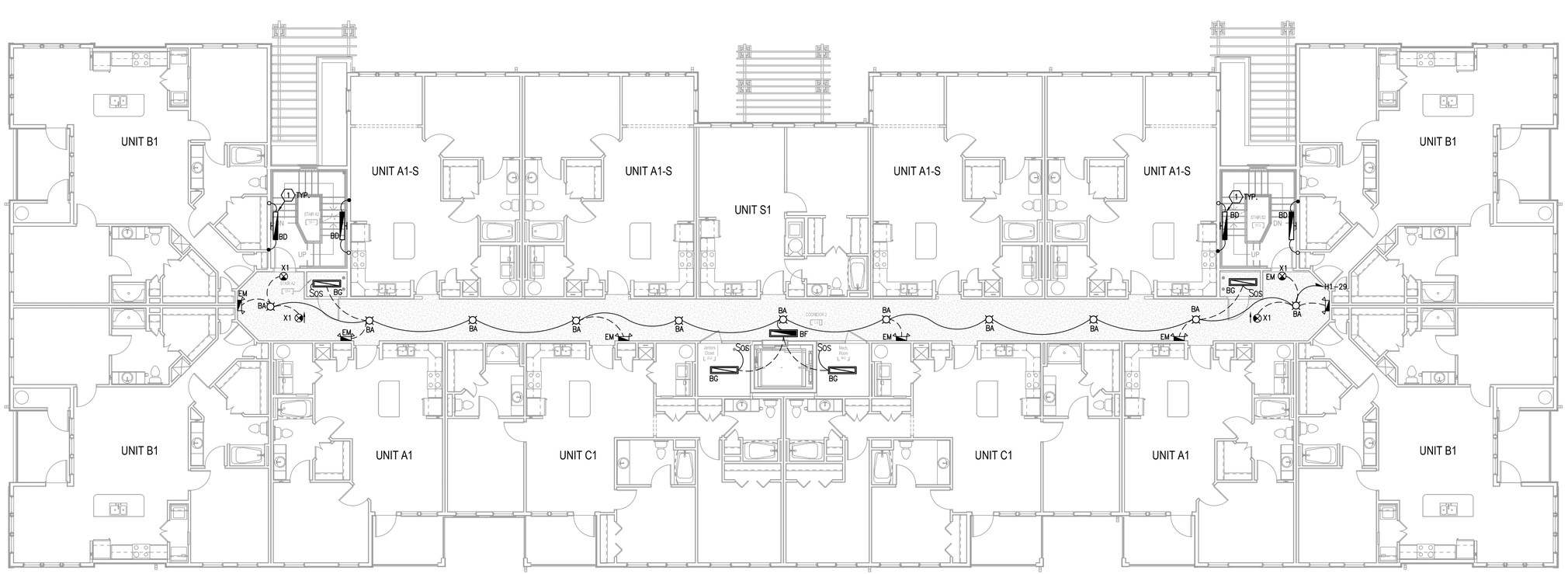

H1 BUILDING TYPE 1 - LEVEL 2 - LIGHTING
1/8" = 1'-0"

PERMIT REVIEW STAMP

ISSUE HISTORY

No.	Date	Description
1	10/06/2017	COORDINATION SET
2	11/10/2017	75%-90% REVIEW COORD. SET

REVISION HISTORY

No.	Date	Description

© 2015 These documents and their contents are the property of FUGLEBERG KOCH, PLLC - AA26002103, and are issued only for the specific project noted on these drawings. Any reproductions, revisions, or modifications of these documents without the expressed written consent of Fugleberg Koch, PLLC is prohibited by law.

FUGLEBERG KOCH
2555 Temple Trail, Winter Park, FL 32789 (407) 629-0595
www.fuglebergkoch.com BR569

CONSULTANT
Joseph, Lawrence & Co
Consulting Engineers
1180 HARWOOD AVE. SUITE 3000
ALTAMONTE SPRINGS, FLORIDA 32714
TEL: 321.972.4466
WWW.JLCENG.COM
CA NO. 28730

JLC 17.0137.00

Blake Lawrence Suddeth
P.E. #: 69060

SUMMER BAY APTS. II
LAKE COUNTY, FL

Drawn:	MJR/KCM
Checked:	BLS/AJB
Approval:	BLS/AJB
Date:	11/10/2017
Project #:	5389

BUILDING TYPE 1 - LEVEL 2
PLAN - LIGHTING

E2.07

GENERAL NOTES:

A. DO NOT SCALE ELECTRICAL DRAWING FOR ANY DIMENSIONS.

B. ALL WORK SHALL COMPLY WITH THE 2011 NATIONAL ELECTRIC CODE, NATIONAL, STATE AND LOCAL CODES. PROVIDE GROUNDING AND BONDING PER NEC 250.

C. SEE SINGLE LINE DIAGRAM FOR FEEDER WIRE AND CONDUIT SIZE. ALL CIRCUITS NOT SIZED ON DRAWING SHALL BE INSTALLED TO MEET MINIMUM SIZE REQUIRED BY NEC. ALL CONDUCTORS SHALL HAVE AN EQUIPMENT GROUND WIRE SIZED PER NEC.

D. FIELD VERIFY EXACT LOCATION OF ALL DEVICES AND EQUIPMENT PRIOR TO ROUGH IN.

E. REFER TO ENLARGED TYPICAL UNIT PLANS FOR ALL ELECTRICAL IN UNITS.

REFERENCE NOTES: (X)

(1) COORDINATE MOUNTING HEIGHT AND LOCATION OF FIXTURE OVER STAIR WITH ARCHITECT PRIOR TO ROUGH-IN.

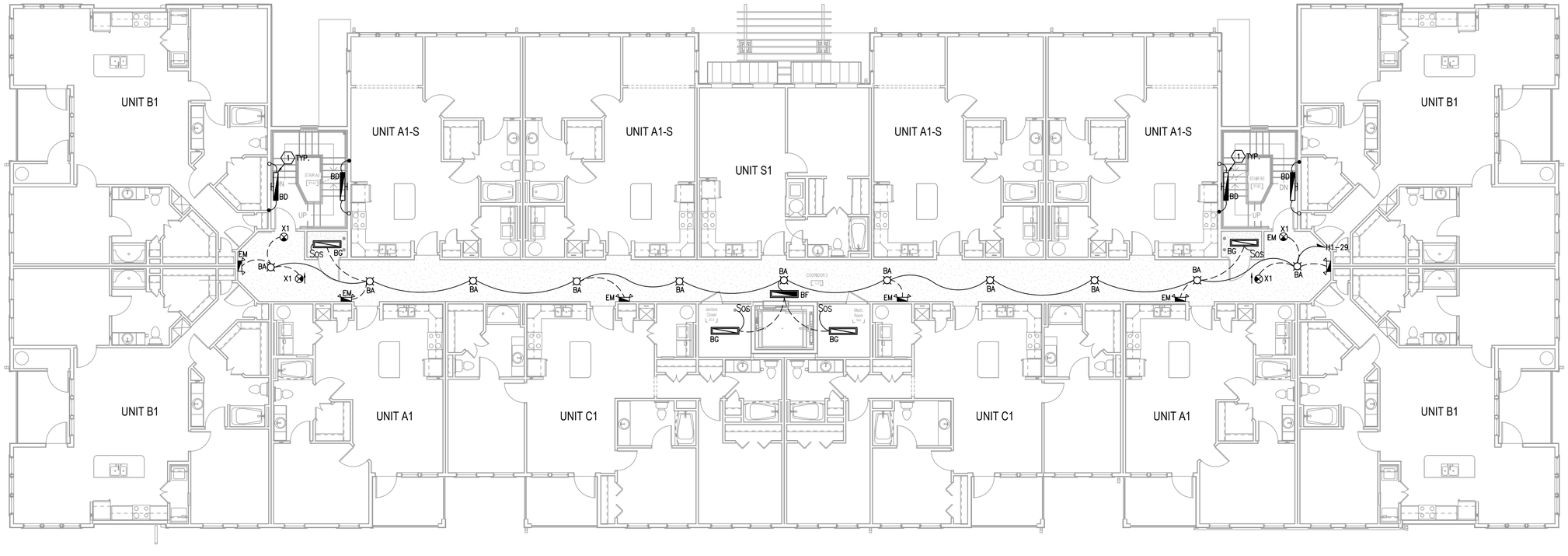

H1 BUILDING TYPE 1 - LEVEL 3 - LIGHTING
1/8" = 1'-0"

PERMIT REVIEW STAMP

ISSUE HISTORY

No.	Date	Description
1	10/06/2017	COORDINATION SET
2	11/10/2017	75%-90% REVIEW COORD. SET

REVISION HISTORY

No.	Date	Description

FUGLEBERG KOCH
2555 Temple Trail, Winter Park, FL 32789 (407) 629-0595
www.fuglebergkoch.com BR569

CONSULTANT
Joseph, Lawrence & Co
Consulting Engineers
1180 HARWOOD AVE. SUITE 3000
ALTAMONTE SPRINGS, FLORIDA 32714
TEL: 321.972.4466
WWW.JLCENG.COM
CA NO. 28730

JLC 17.0137.00

Blake Lawrence Suddeth
P.E. #: 69060

SUMMER BAY APTS. II
LAKE COUNTY, FL

Drawn:	MJR/KCM
Checked:	BLS/AJB
Approval:	BLS/AJB
Date:	11/10/2017
Project #:	5389

BUILDING TYPE 1 - LEVEL 3
PLAN - LIGHTING

E2.08

© 2015 These documents and their contents are the property of FUGLEBERG KOCH, PLLC - AA26002103, and are issued only for the specific project noted on these drawings. Any reproductions, revisions, or modifications of these documents without the expressed written consent of Fugleberg Koch, PLLC is prohibited by law.

GENERAL NOTES:

A. DO NOT SCALE ELECTRICAL DRAWING FOR ANY DIMENSIONS.

B. ALL WORK SHALL COMPLY WITH THE 2011 NATIONAL ELECTRIC CODE, NATIONAL, STATE AND LOCAL CODES. PROVIDE GROUNDING AND BONDING PER NEC 250.

C. SEE SINGLE LINE DIAGRAM FOR FEEDER WIRE AND CONDUIT SIZE. ALL CIRCUITS NOT SIZED ON DRAWING SHALL BE INSTALLED TO MEET MINIMUM SIZE REQUIRED BY NEC. ALL CONDUCTORS SHALL HAVE AN EQUIPMENT GROUND WIRE SIZED PER NEC.

D. FIELD VERIFY EXACT LOCATION OF ALL DEVICES AND EQUIPMENT PRIOR TO ROUGH IN.

E. REFER TO ENLARGED TYPICAL UNIT PLANS FOR ALL ELECTRICAL IN UNITS.

REFERENCE NOTES: ⟨X⟩

⟨1⟩ COORDINATE MOUNTING HEIGHT AND LOCATION OF FIXTURE OVER STAIR WITH ARCHITECT PRIOR TO ROUGH-IN.

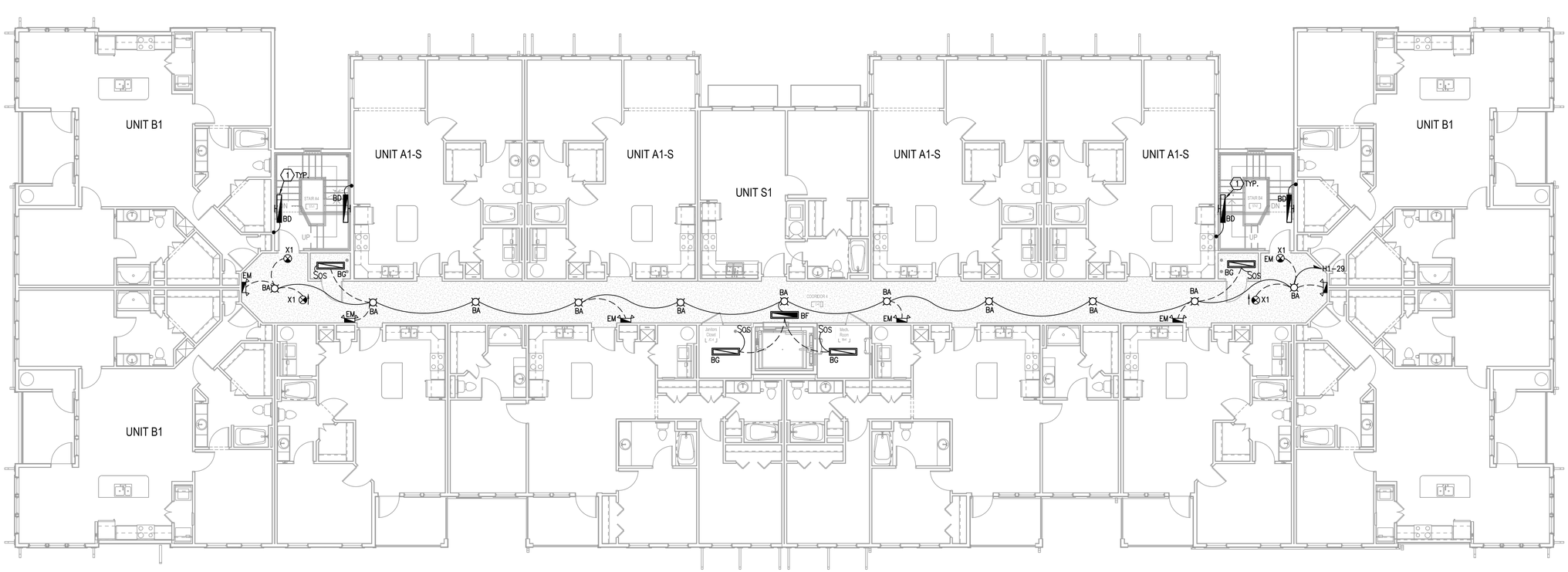

H1 BUILDING TYPE 1 - LEVEL 4 - LIGHTING
1/8" = 1'-0"

PERMIT REVIEW STAMP

ISSUE HISTORY

No.	Date	Description
1	10/06/2017	COORDINATION SET
2	11/10/2017	75%-90% REVIEW COORD. SET

REVISION HISTORY

No.	Date	Description

© 2015 These documents and their contents are the property of FUGLEBERG KOCH, P.L.C. • AA0002123 and are issued only for the specific project noted on these drawings. Any reproductions, revisions, or modifications of these documents without the expressed written consent of Fugleberg Koch, P.L.C. is prohibited by law.

FUGLEBERG KOCH
2555 Temple Trail, Winter Park, FL 32789 (407) 629-0595
www.fuglebergkoch.com BR569

CONSULTANT
Joseph, Lawrence & Co
Consulting Engineers
1180 HARWOOD AVE. SUITE 3000
ALTAMONTE SPRINGS, FLORIDA 32714
TEL. 321.972.4466
WWW.JLCENG.COM
CA NO. 28730

JLC 17.0137.00

Blake Lawrence Suddeth
P.E. #: 69060

SUMMER BAY APTS. II
LAKE COUNTY, FL

Drawn:	MJR/KCM
Checked:	BLS/AJB
Approval:	BLS/AJB
Date:	11/10/2017
Project #:	5389

BUILDING TYPE 1 - LEVEL 4 PLAN - LIGHTING

E2.09

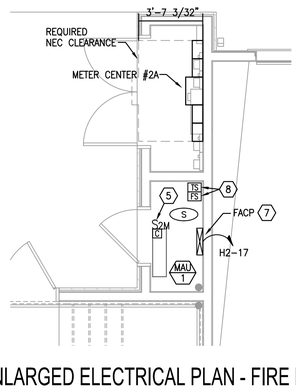

NOTE:
METER CLOSETS MC-1 AND MC-2 REQUIRE A MINIMUM WIDTH OF 3'-8" IN ORDER TO MEET REQUIRED N.E.C. CLEARANCES.

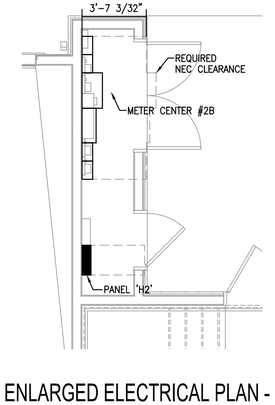

B1 ENLARGED ELECTRICAL PLAN - FIRE RISER / METER CLOSET
1/4" = 1'-0"

B4 ENLARGED ELECTRICAL PLAN - METER CLOSET
1/4" = 1'-0"

GENERAL NOTES:

A. DO NOT SCALE ELECTRICAL DRAWING FOR ANY DIMENSIONS.

B. ALL WORK SHALL COMPLY WITH THE 2011 NATIONAL ELECTRIC CODE, NATIONAL, STATE AND LOCAL CODES. PROVIDE GROUNDING AND BONDING PER NEC 250.

C. SEE SINGLE LINE DIAGRAM FOR FEEDER WIRE AND CONDUIT SIZE. ALL CIRCUITS NOT SIZED ON DRAWING SHALL BE INSTALLED TO MEET MINIMUM SIZE REQUIRED BY NEC. ALL CONDUCTORS SHALL HAVE AN EQUIPMENT GROUND WIRE SIZED PER NEC.

D. FIELD VERIFY EXACT LOCATION OF ALL DEVICES AND EQUIPMENT PRIOR TO ROUGH IN.

E. REFER TO ENLARGED TYPICAL UNIT PLANS FOR ALL ELECTRICAL IN UNITS.

REFERENCE NOTES: (X)

(1) PROVIDE PUSHBUTTON CONTROL AND LOW VOLTAGE WIRING FOR GARAGE DOOR OPENER AS REQUIRED BY OWNER/MANUFACTURER.

(2) PROVIDE 120V CEILING MOUNTED OUTLET FOR GARAGE DOOR OPENER. COORDINATE LOCATION WITH DOOR INSTALLER PRIOR TO ROUGH-IN. PROVIDE LOW VOLTAGE WIRING AND PUSH BUTTON LOCATED NEAR DOOR AS REQUIRED.

(3) GARAGE EXHAUST FAN TO BE CONTROLLED BY CARBON MONOXIDE DETECTOR PROVIDED BY MECHANICAL CONTRACTOR.

(4) PROVIDE 120V CONNECTION TO CARBON MONOXIDE SENSOR PROVIDED BY MECHANICAL CONTRACTOR. COORDINATE CONTROL WIRING WITH MECHANICAL CONTRACTOR AND PROVIDE AS REQUIRED. CONNECT TO LOCAL GARAGE CIRCUIT.

(5) CONNECT INTERIOR MECHANICAL MINI-SPLIT UNIT THROUGH EXTERIOR UNIT. CONNECT PER MANUFACTURER'S RECOMMENDATIONS, AND PROVIDE ALL CONTROL WIRING, CONDUIT, ETC. AS REQUIRED.

(6) PROVIDE 120V CIRCUIT FOR CONNECTION OF FIRE/SMOKE DAMPER, CIRCUIT H2-59. COORDINATE LOCATION AND CONNECTION REQUIREMENTS WITH MECHANICAL CONTRACTOR PRIOR TO ROUGH-IN.

(7) CONNECT FIRE ALARM CONTROL PANEL (FACP) TO HOUSE PANEL. PROVIDE 3/4"C. WITH #12 WIRE TO DUCT IN CLUBHOUSE FOR MONITORING, FIRE ALARM SYSTEM TO OPERATE DIALERS. PROVIDE SURGE SUPPRESSION ON HIGH AND LOW VOLTAGE, AND PHONE LINES FOR FIRE ALARM SYSTEMS. CONTRACTOR TO PROVIDE PHONE LOOP THRU PROJECT TO CLUBHOUSE FOR FIRE ALARMS FOR TWO PHONE LINES.

(8) COORDINATE EXACT LOCATION OF TAMPER AND FLOW SWITCHES WITH FIRE PROTECTION DRAWINGS PRIOR TO ROUGH-IN.

(9) ELECTRICAL CONTRACTOR SHALL COORDINATE DISCONNECT AND FUSE REQUIREMENTS FOR MECHANICAL UNIT WITH MECHANICAL CONTRACTOR AND EQUIPMENT MANUFACTURER PRIOR TO ROUGH-IN AND PROVIDE AS REQUIRED. COORDINATE LOCATION OF DISCONNECT WITH OWNER AND MECHANICAL CONTRACTOR PRIOR TO ROUGH-IN. LOCATE AS REQUIRED TO MAINTAIN NEC CLEARANCES.

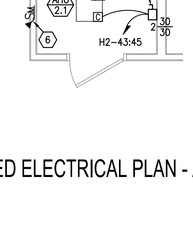

D1 ENLARGED ELECTRICAL PLAN - AC CLOSET
1/4" = 1'-0"

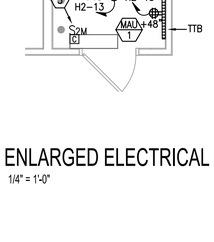

D4 ENLARGED ELECTRICAL PLAN - COMM/CABLE CLOSET
1/4" = 1'-0"

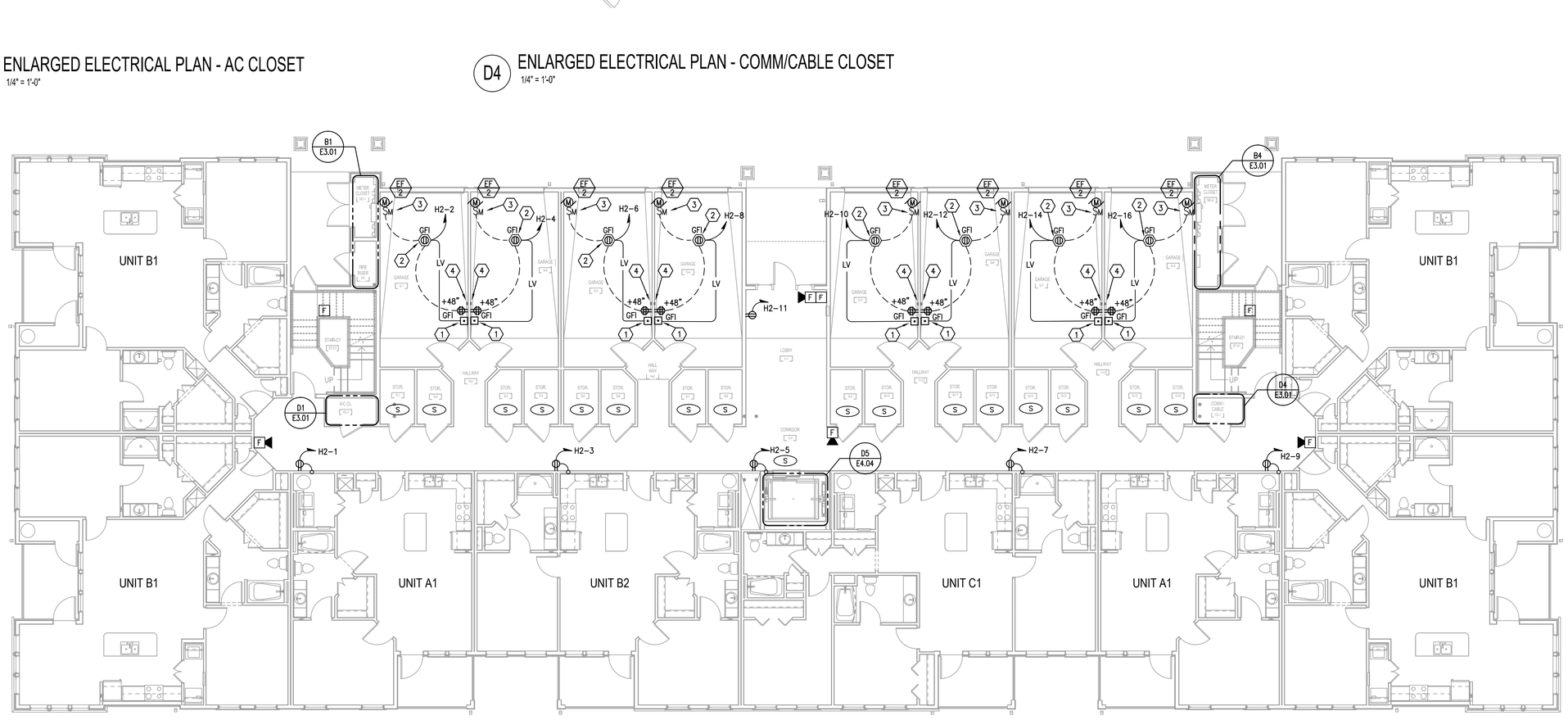

H1 BUILDING TYPE 2 - GROUND LEVEL - POWER & SYSTEMS
1/8" = 1'-0"

PERMIT REVIEW STAMP

ISSUE HISTORY

No.	Date	Description
1	10/06/2017	COORDINATION SET
2	11/10/2017	75%-90% REVIEW COORD. SET

REVISION HISTORY

No.	Date	Description

© 2015 These documents are the property of FUGLEBERG KOCH, P.L.C. LA0000125 and are issued only for the specific project noted on these drawings. No reproductions, revisions, or modifications of these documents without the expressed written consent of Fugleberg Koch, P.L.C. is permitted by law.

FUGLEBERG KOCH
2555 Temple Trail, Winter Park, FL 32789 (407) 629-0595
www.fuglebergkoch.com BR569

CONSULTANT
Joseph, Lawrence & Co
Consulting Engineers
1180 HARWOOD AVE. SUITE 3000
ALTAMONTE SPRINGS, FLORIDA 32714
TEL: 321.972.4466
WWW.JLCENG.COM
CA NO. 28730

JLC 17.0137.00

Blake Lawrence Suddeth
P.E. #: 69060

SUMMER BAY APTS. II
LAKE COUNTY, FL

Drawn:	MJR/KCM
Checked:	BLS/AJB
Approval:	BLS/AJB
Date:	11/10/2017
Project #:	5389

BUILDING TYPE 2 - GROUND FLOOR PLAN - PWR. & SYS.

E3.01

GENERAL NOTES:

A. DO NOT SCALE ELECTRICAL DRAWING FOR ANY DIMENSIONS.

B. ALL WORK SHALL COMPLY WITH THE 2011 NATIONAL ELECTRIC CODE, NATIONAL, STATE AND LOCAL CODES. PROVIDE GROUNDING AND BONDING PER NEC 250.

C. SEE SINGLE LINE DIAGRAM FOR FEEDER WIRE AND CONDUIT SIZE. ALL CIRCUITS NOT SIZED ON DRAWING SHALL BE INSTALLED TO MEET MINIMUM SIZE REQUIRED BY NEC. ALL CONDUCTORS SHALL HAVE AN EQUIPMENT GROUND WIRE SIZED PER NEC.

D. FIELD VERIFY EXACT LOCATION OF ALL DEVICES AND EQUIPMENT PRIOR TO ROUGH IN.

E. REFER TO ENLARGED TYPICAL UNIT PLANS FOR ALL ELECTRICAL IN UNITS.

REFERENCE NOTES: (X)

1. PROVIDE 120V CIRCUIT FOR CONNECTION OF FIRE/SMOKE DAMPER, CIRCUIT H2-59. COORDINATE LOCATION AND CONNECTION REQUIREMENTS WITH MECHANICAL CONTRACTOR PRIOR TO ROUGH-IN.
2. ELECTRICAL CONTRACTOR SHALL COORDINATE DISCONNECT AND FUSE REQUIREMENTS FOR MECHANICAL UNIT WITH MECHANICAL CONTRACTOR AND EQUIPMENT MANUFACTURER PRIOR TO ROUGH-IN AND PROVIDE AS REQUIRED. COORDINATE LOCATION OF DISCONNECT WITH OWNER AND MECHANICAL CONTRACTOR PRIOR TO ROUGH-IN. LOCATE AS REQUIRED TO MAINTAIN NEC CLEARANCES.
3. PROVIDE AREA OF REFUGE TWO-WAY COMMUNICATION SYSTEM AND CABLING TO MAIN BASE STATION AS REQUIRED BY 2012 IBC AND LIFE SAFETY CODE. COORDINATE LOCATION WITH OWNER AND AUTHORITY HAVING JURISDICTION PRIOR TO ROUGH-IN.

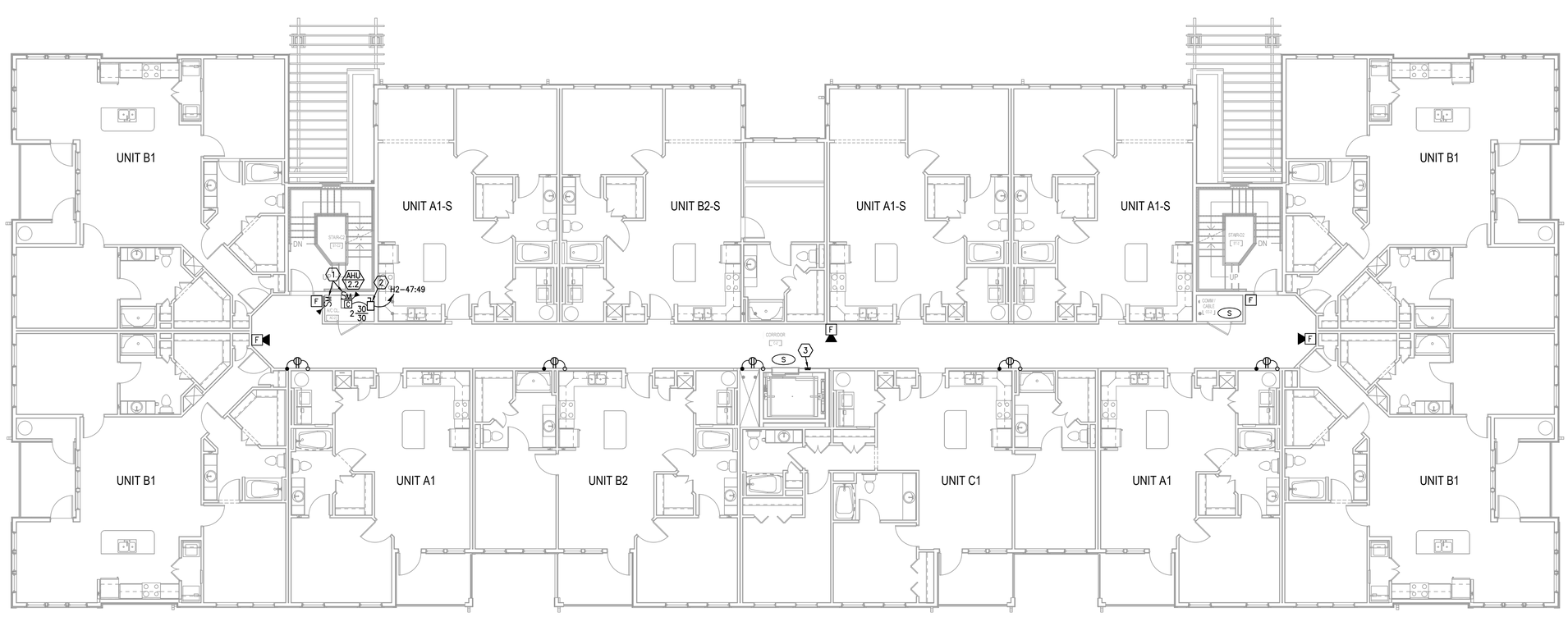

H1 BUILDING TYPE 2 - LEVEL 2 - POWER & SYSTEMS
1/8" = 1'-0"

PERMIT REVIEW STAMP

ISSUE HISTORY

No.	Date	Description
1	10/06/2017	COORDINATION SET
2	11/10/2017	75%-90% REVIEW COORD. SET

REVISION HISTORY

No.	Date	Description

© 2015 These documents and their contents are the property of FUGLEBERG KOCH, PLLC - AA26002103, and are issued only for the specific project noted on these drawings. Any reproductions, revisions, or modifications of these documents without the expressed written consent of Fugleberg Koch, PLLC is prohibited by law.

FUGLEBERG KOCH
2555 Temple Trail, Winter Park, FL 32789 (407) 629-0595
www.fuglebergkoch.com BR569

CONSULTANT
Joseph, Lawrence & Co
Consulting Engineers
1180 HARWOOD AVE. SUITE 3000
ALTAMONTE SPRINGS, FLORIDA 32714
TEL: 321.972.4466
WWW.JLCENG.COM
CA NO. 28730

JLC 17.0137.00

Blake Lawrence Suddeth
P.E. #: 69060

SUMMER BAY APTS. II
LAKE COUNTY, FL

Drawn:	MJR/KCM
Checked:	BLS/AJB
Approval:	BLS/AJB
Date:	11/10/2017
Project #:	5389

BUILDING TYPE 2 - LEVEL 2 PLAN - PWR. & SYS.

E3.02

GENERAL NOTES:

A. DO NOT SCALE ELECTRICAL DRAWING FOR ANY DIMENSIONS.

B. ALL WORK SHALL COMPLY WITH THE 2011 NATIONAL ELECTRIC CODE, NATIONAL, STATE AND LOCAL CODES. PROVIDE GROUNDING AND BONDING PER NEC 250.

C. SEE SINGLE LINE DIAGRAM FOR FEEDER WIRE AND CONDUIT SIZE. ALL CIRCUITS NOT SIZED ON DRAWING SHALL BE INSTALLED TO MEET MINIMUM SIZE REQUIRED BY NEC. ALL CONDUCTORS SHALL HAVE AN EQUIPMENT GROUND WIRE SIZED PER NEC.

D. FIELD VERIFY EXACT LOCATION OF ALL DEVICES AND EQUIPMENT PRIOR TO ROUGH IN.

E. REFER TO ENLARGED TYPICAL UNIT PLANS FOR ALL ELECTRICAL IN UNITS.

REFERENCE NOTES: (X)

1. PROVIDE 120V CIRCUIT FOR CONNECTION OF FIRE/SMOKE DAMPER, CIRCUIT H2-59. COORDINATE LOCATION AND CONNECTION REQUIREMENTS WITH MECHANICAL CONTRACTOR PRIOR TO ROUGH-IN.
2. ELECTRICAL CONTRACTOR SHALL COORDINATE DISCONNECT AND FUSE REQUIREMENTS FOR MECHANICAL UNIT WITH MECHANICAL CONTRACTOR AND EQUIPMENT MANUFACTURER PRIOR TO ROUGH-IN AND PROVIDE AS REQUIRED. COORDINATE LOCATION OF DISCONNECT WITH OWNER AND MECHANICAL CONTRACTOR PRIOR TO ROUGH-IN. LOCATE AS REQUIRED TO MAINTAIN NEC CLEARANCES.
3. PROVIDE AREA OF REFUGE TWO-WAY COMMUNICATION SYSTEM AND CABLING TO MAIN BASE STATION AS REQUIRED BY 2012 IBC AND LIFE SAFETY CODE. COORDINATE LOCATION WITH OWNER AND AUTHORITY HAVING JURISDICTION PRIOR TO ROUGH-IN.

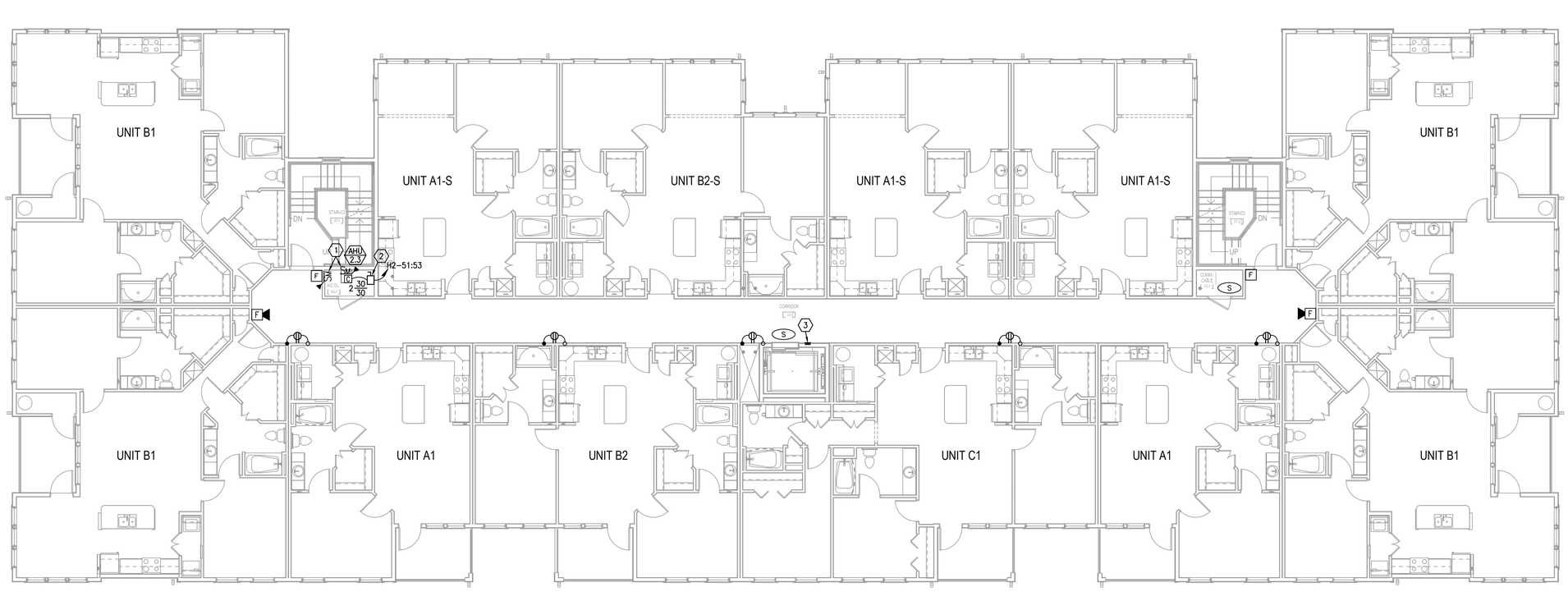

H1 BUILDING TYPE 2 - LEVEL 3 - POWER & SYSTEMS
1/8" = 1'-0"

PERMIT REVIEW STAMP

ISSUE HISTORY

No.	Date	Description
1	10/06/2017	COORDINATION SET
2	11/10/2017	75%-90% REVIEW COORD. SET

REVISION HISTORY

No.	Date	Description

FUGLEBERG KOCH
2555 Temple Trail, Winter Park, FL 32789 (407) 629-0595
www.fuglebergkoch.com BR569

CONSULTANT
Joseph, Lawrence & Co
Consulting Engineers
1180 HARWOOD AVE. SUITE 3000
ALTAMONTE SPRINGS, FLORIDA 32714
TEL: 321.972.4466
WWW.JLCENG.COM
CA NO. 28730

JLC 17.0137.00

Blake Lawrence Suddeth
P.E. #: 69060

SUMMER BAY APTS. II
LAKE COUNTY, FL

Drawn:	MJR/KCM
Checked:	BLS/AJB
Approval:	BLS/AJB
Date:	11/10/2017
Project #:	5389

BUILDING TYPE 2 - LEVEL 3 PLAN - PWR. & SYS.

E3.03

© 2015 These documents and their contents are the property of FUGLEBERG KOCH, PLLC - AA26002103, and are issued only for the specific project noted on these drawings. Any reproductions, revisions, or modifications of these documents without the expressed written consent of Fugleberg Koch, PLLC is prohibited by law.

GENERAL NOTES:

A. DO NOT SCALE ELECTRICAL DRAWING FOR ANY DIMENSIONS.

B. ALL WORK SHALL COMPLY WITH THE 2011 NATIONAL ELECTRIC CODE, NATIONAL, STATE AND LOCAL CODES. PROVIDE GROUNDING AND BONDING PER NEC 250.

C. SEE SINGLE LINE DIAGRAM FOR FEEDER WIRE AND CONDUIT SIZE. ALL CIRCUITS NOT SIZED ON DRAWING SHALL BE INSTALLED TO MEET MINIMUM SIZE REQUIRED BY NEC. ALL CONDUCTORS SHALL HAVE AN EQUIPMENT GROUND WIRE SIZED PER NEC.

D. FIELD VERIFY EXACT LOCATION OF ALL DEVICES AND EQUIPMENT PRIOR TO ROUGH IN.

E. REFER TO ENLARGED TYPICAL UNIT PLANS FOR ALL ELECTRICAL IN UNITS.

REFERENCE NOTES: (X)

1. PROVIDE 120V CIRCUIT FOR CONNECTION OF FIRE/SMOKE DAMPER, CIRCUIT H2-59. COORDINATE LOCATION AND CONNECTION REQUIREMENTS WITH MECHANICAL CONTRACTOR PRIOR TO ROUGH-IN.

2. ELECTRICAL CONTRACTOR SHALL COORDINATE DISCONNECT AND FUSE REQUIREMENTS FOR MECHANICAL UNIT WITH MECHANICAL CONTRACTOR AND EQUIPMENT MANUFACTURER PRIOR TO ROUGH-IN AND PROVIDE AS REQUIRED. COORDINATE LOCATION OF DISCONNECT WITH OWNER AND MECHANICAL CONTRACTOR PRIOR TO ROUGH-IN. LOCATE AS REQUIRED TO MAINTAIN NEC CLEARANCES.

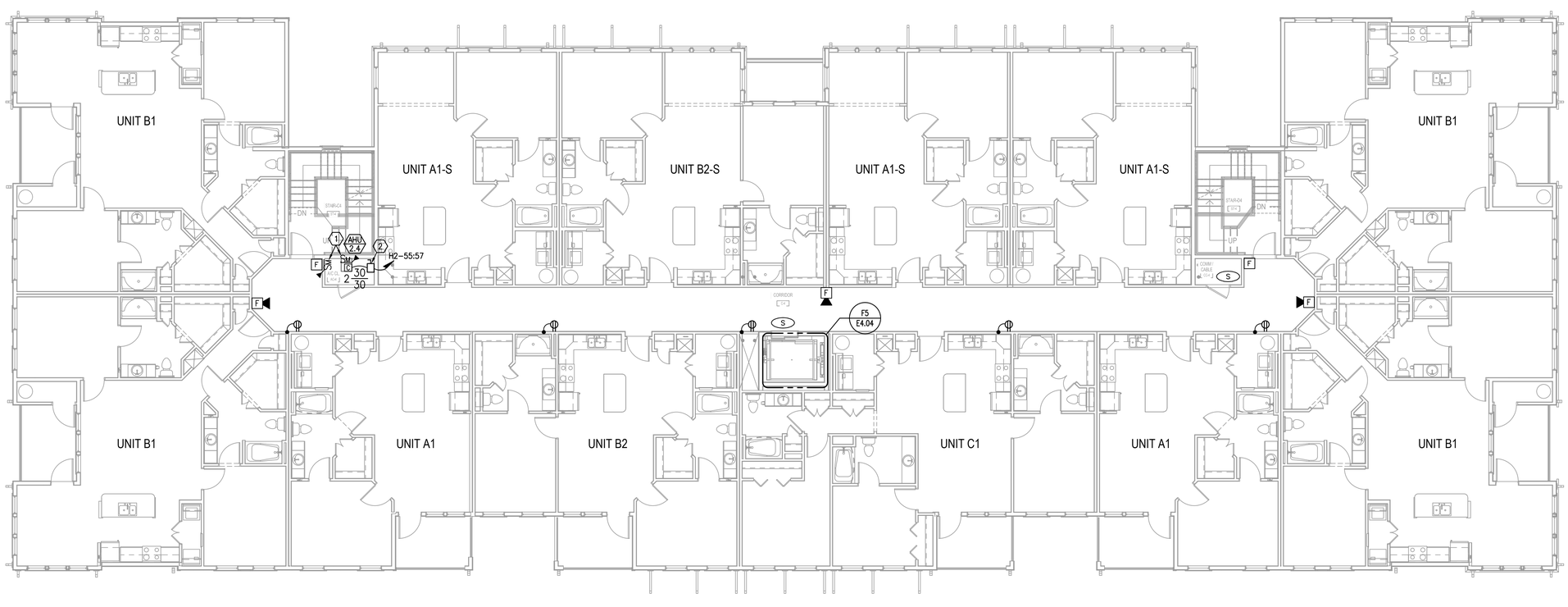

H1 BUILDING TYPE 2 - LEVEL 4 - POWER & SYSTEMS
1/8" = 1'-0"

PERMIT REVIEW STAMP

ISSUE HISTORY

No.	Date	Description
1	10/06/2017	COORDINATION SET
2	11/10/2017	75%-90% REVIEW COORD. SET

REVISION HISTORY

No.	Date	Description

FUGLEBERG KOCH
2555 Temple Trail, Winter Park, FL 32789 (407) 629-0595
www.fuglebergkoch.com BR569

CONSULTANT
Joseph, Lawrence & Co
Consulting Engineers
1180 HARWOOD AVE. SUITE 3000
ALTAMONTE SPRINGS, FLORIDA 32714
TEL: 321.972.4466
WWW.JLCENG.COM
CA NO. 28730

JLC 17.0137.00

Blake Lawrence Suddeth
P.E. #: 69060

SUMMER BAY APTS. II
LAKE COUNTY, FL

Drawn:	MJR/KCM
Checked:	BLS/AJB
Approval:	BLS/AJB
Date:	11/10/2017
Project #:	5389

BUILDING TYPE 2 - LEVEL 4 PLAN - PWR. & SYS.

E3.04

© 2015 These documents and their contents are the property of FUGLEBERG KOCH, PLLC - AA26002103, and are issued only for the specific project noted on these drawings. Any reproductions, revisions, or modifications of these documents without the expressed written consent of Fugleberg Koch, PLLC is prohibited by law.

GENERAL NOTES:

A. DO NOT SCALE ELECTRICAL DRAWING FOR ANY DIMENSIONS.

B. ALL WORK SHALL COMPLY WITH THE 2011 NATIONAL ELECTRIC CODE, NATIONAL, STATE AND LOCAL CODES. PROVIDE GROUNDING AND BONDING PER NEC 250.

C. SEE SINGLE LINE DIAGRAM FOR FEEDER WIRE AND CONDUIT SIZE. ALL CIRCUITS NOT SIZED ON DRAWING SHALL BE INSTALLED TO MEET MINIMUM SIZE REQUIRED BY NEC. ALL CONDUCTORS SHALL HAVE AN EQUIPMENT GROUND WIRE SIZED PER NEC.

D. FIELD VERIFY EXACT LOCATION OF ALL DEVICES AND EQUIPMENT PRIOR TO ROUGH IN.

E. REFER TO ENLARGED TYPICAL UNIT PLANS FOR ALL ELECTRICAL IN UNITS.

REFERENCE NOTES: ⟨X⟩

⟨1⟩ ELECTRICAL CONTRACTOR SHALL COORDINATE DISCONNECT AND FUSE REQUIREMENTS FOR MECHANICAL UNIT WITH MECHANICAL CONTRACTOR AND EQUIPMENT MANUFACTURER PRIOR TO ROUGH-IN AND PROVIDE AS REQUIRED. CONNECT CONDENSING UNIT TO CORRESPONDING UNIT PANEL, REFER TO TYPICAL PLANS AND SCHEDULES FOR CIRCUITING AND SIZING INFORMATION. COORDINATE LOCATION OF DISCONNECT WITH OWNER AND MECHANICAL CONTRACTOR PRIOR TO ROUGH-IN. LOCATE AS REQUIRED TO MAINTAIN NEC CLEARANCES.

⟨2⟩ ELECTRICAL CONTRACTOR SHALL COORDINATE DISCONNECT AND FUSE REQUIREMENTS FOR MECHANICAL UNIT WITH MECHANICAL CONTRACTOR AND EQUIPMENT MANUFACTURER PRIOR TO ROUGH-IN AND PROVIDE AS REQUIRED. COORDINATE LOCATION OF DISCONNECT WITH OWNER AND MECHANICAL CONTRACTOR PRIOR TO ROUGH-IN. LOCATE AS REQUIRED TO MAINTAIN NEC CLEARANCES.

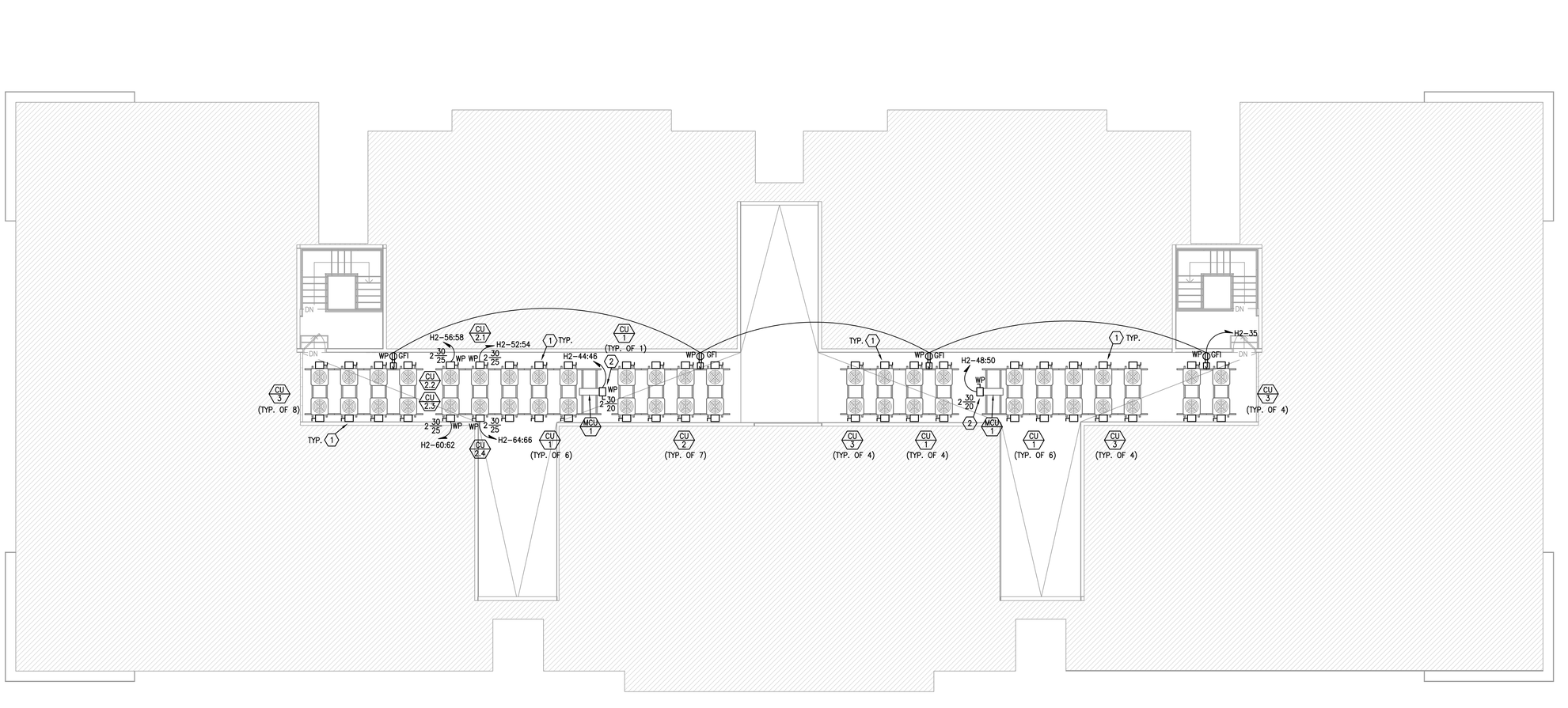

H1 BUILDING TYPE 2 - ROOF - ELECTRICAL
1/8" = 1'-0"

PERMIT REVIEW STAMP

ISSUE HISTORY

No.	Date	Description
1	10/06/2017	COORDINATION SET
2	11/10/2017	75%-90% REVIEW COORD. SET

REVISION HISTORY

No.	Date	Description

© 2015 These documents and their contents are the property of FUGLEBERG KOCH, P.L.C. • AA0002120 and are issued only for the specific project noted on these drawings. Any reproductions, revisions, or modifications of these documents without the expressed written consent of Fugleberg Koch, P.L.C. is prohibited by law.

FUGLEBERG KOCH
2555 Temple Trail, Winter Park, FL 32789 (407) 629-0595
www.fuglebergkoch.com BR569

CONSULTANT
Joseph, Lawrence & Co
Consulting Engineers
1180 HARWOOD AVE. SUITE 3000
ALTAMONTE SPRINGS, FLORIDA 32714
TEL: 321.972.4466
WWW.JLCENG.COM
CA NO. 28730

JLC 17.0137.00

Blake Lawrence Suddeth
P.E. #: 69060

SUMMER BAY APTS. II
LAKE COUNTY, FL

Drawn:	MJR/KCM
Checked:	BLS/AJB
Approval:	BLS/AJB
Date:	11/10/2017
Project #:	5389

BUILDING TYPE 2 - ROOF - ELECTRICAL

E3.05

GENERAL NOTES:

A. DO NOT SCALE ELECTRICAL DRAWING FOR ANY DIMENSIONS.

B. ALL WORK SHALL COMPLY WITH THE 2011 NATIONAL ELECTRIC CODE, NATIONAL, STATE AND LOCAL CODES. PROVIDE GROUNDING AND BONDING PER NEC 250.

C. SEE SINGLE LINE DIAGRAM FOR FEEDER WIRE AND CONDUIT SIZE. ALL CIRCUITS NOT SIZED ON DRAWING SHALL BE INSTALLED TO MEET MINIMUM SIZE REQUIRED BY NEC. ALL CONDUCTORS SHALL HAVE AN EQUIPMENT GROUND WIRE SIZED PER NEC.

D. FIELD VERIFY EXACT LOCATION OF ALL DEVICES AND EQUIPMENT PRIOR TO ROUGH IN.

E. REFER TO ENLARGED TYPICAL UNIT PLANS FOR ALL ELECTRICAL IN UNITS.

REFERENCE NOTES: ⓧ

(1) COORDINATE MOUNTING HEIGHT AND LOCATION OF FIXTURE OVER STAIR WITH ARCHITECT PRIOR TO ROUGH-IN.

(2) CONNECT LIGHT FIXTURES VIA PHOTOCELL FOR AUTOMATIC CONTROL OF FIXTURES.

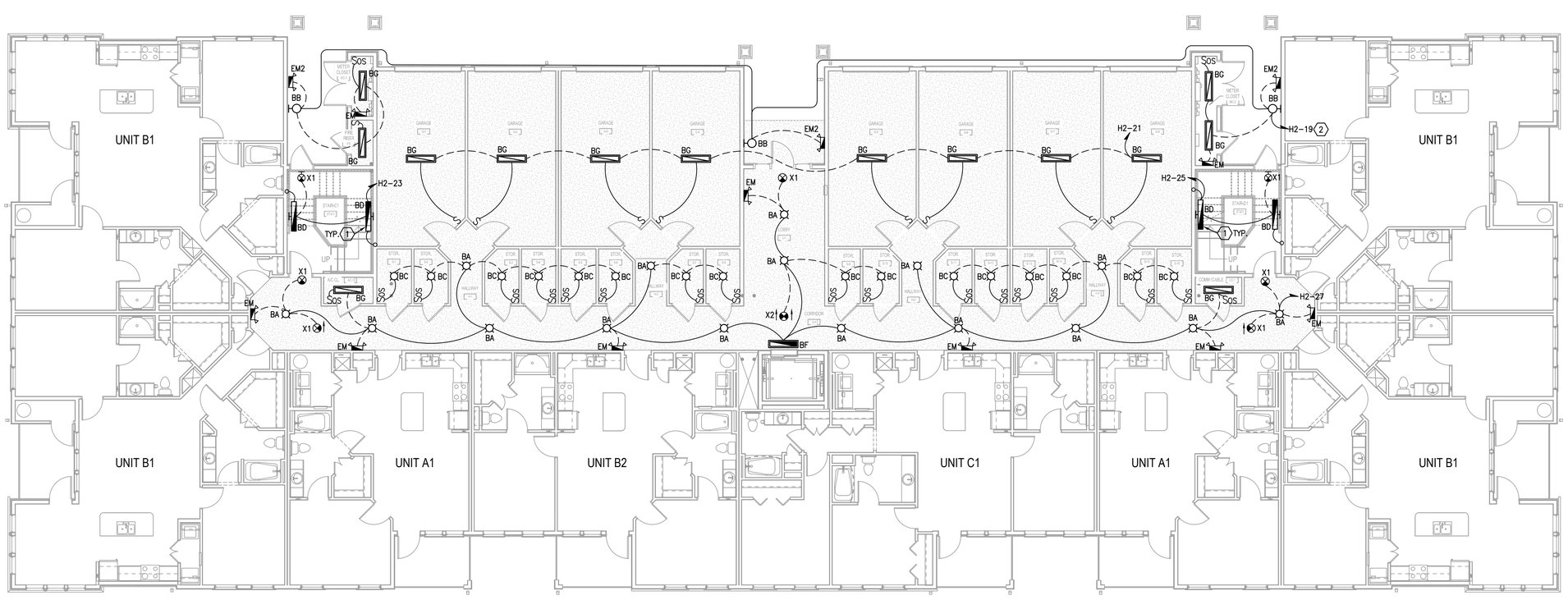

H1 BUILDING TYPE 2 - GROUND LEVEL - LIGHTING
1/8" = 1'-0"

PERMIT REVIEW STAMP

ISSUE HISTORY

No.	Date	Description
1	10/06/2017	COORDINATION SET
2	11/10/2017	75%-90% REVIEW COORD. SET

REVISION HISTORY

No.	Date	Description

© 2015 These documents and the ideas and designs incorporated herein, as an instrument of service, are the property of FUGLEBERG KOCH, P.L.L.C. • 4250021/20 and are loaned only for the specific project noted on these drawings. Any reproductions, revisions, or modifications of these documents without the expressed written consent of Fugleberg Koch, P.L.L.C. is prohibited by law.

FUGLEBERG KOCH
2555 Temple Trail, Winter Park, FL 32789 (407) 629-0595
www.fuglebergkoch.com BR569

CONSULTANT
Joseph, Lawrence & Co
Consulting Engineers
1180 HARWOOD AVE. SUITE 3000
ALTAMONTE SPRINGS, FLORIDA 32714
TEL: 321.972.4466
WWW.JLCENG.COM
CA NO. 28730

JLC 17.0137.00

Blake Lawrence Suddeth
P.E. #: 69060

SUMMER BAY APTS. II
LAKE COUNTY, FL

Drawn:	MJR/KCM
Checked:	BLS/AJB
Approval:	BLS/AJB
Date:	11/10/2017
Project #:	5389

BUILDING TYPE 2 - GROUND FLOOR PLAN - LIGHTING

E3.06

GENERAL NOTES:

A. DO NOT SCALE ELECTRICAL DRAWING FOR ANY DIMENSIONS.

B. ALL WORK SHALL COMPLY WITH THE 2011 NATIONAL ELECTRIC CODE, NATIONAL, STATE AND LOCAL CODES. PROVIDE GROUNDING AND BONDING PER NEC 250.

C. SEE SINGLE LINE DIAGRAM FOR FEEDER WIRE AND CONDUIT SIZE. ALL CIRCUITS NOT SIZED ON DRAWING SHALL BE INSTALLED TO MEET MINIMUM SIZE REQUIRED BY NEC. ALL CONDUCTORS SHALL HAVE AN EQUIPMENT GROUND WIRE SIZED PER NEC.

D. FIELD VERIFY EXACT LOCATION OF ALL DEVICES AND EQUIPMENT PRIOR TO ROUGH IN.

E. REFER TO ENLARGED TYPICAL UNIT PLANS FOR ALL ELECTRICAL IN UNITS.

REFERENCE NOTES: ⟨X⟩

⟨1⟩ COORDINATE MOUNTING HEIGHT AND LOCATION OF FIXTURE OVER STAIR WITH ARCHITECT PRIOR TO ROUGH-IN.

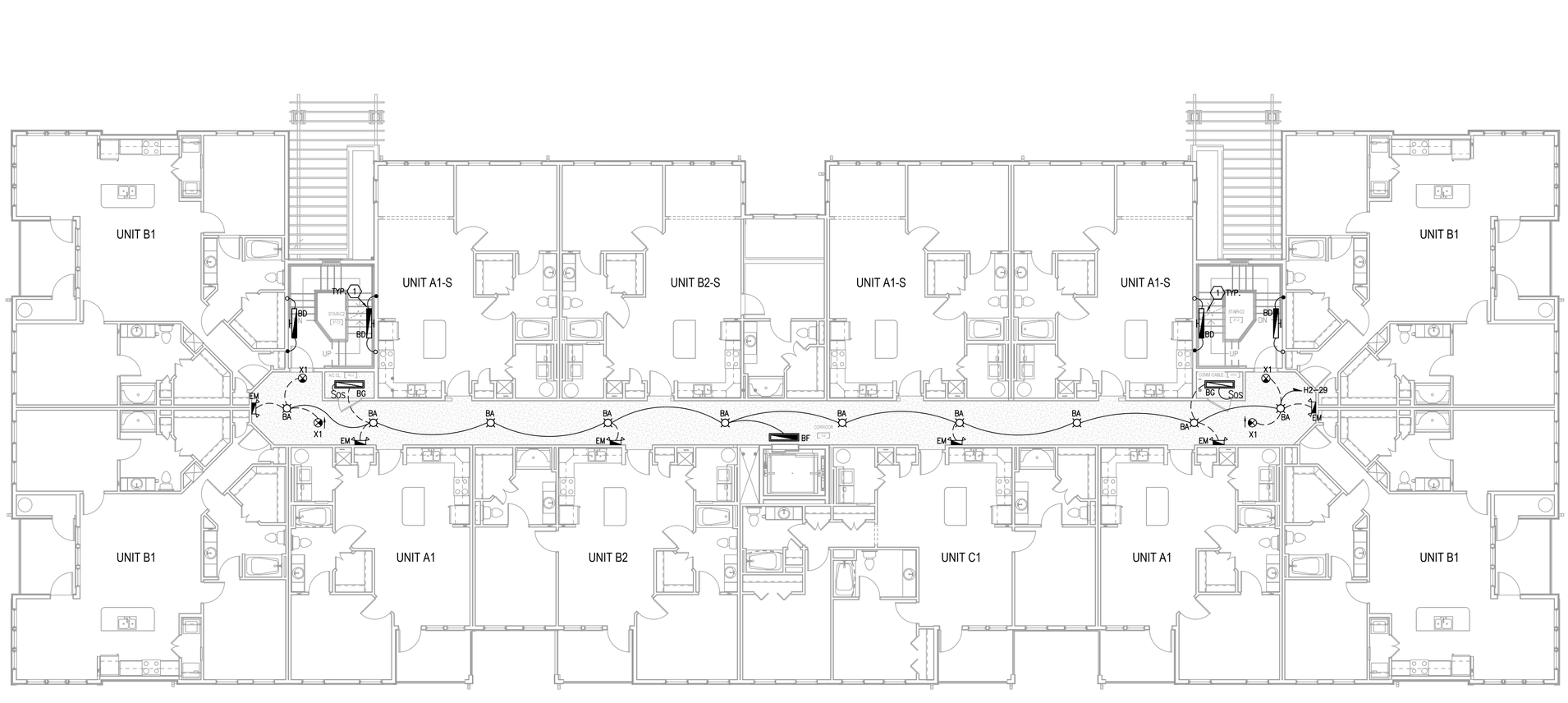

H1 BUILDING TYPE 2 - LEVEL 2 - LIGHTING
1/8" = 1'-0"

PERMIT REVIEW STAMP

ISSUE HISTORY

No.	Date	Description
1	10/06/2017	COORDINATION SET
2	11/10/2017	75%-90% REVIEW COORD. SET

REVISION HISTORY

No.	Date	Description

© 2015 These documents and their contents are the property of FUGLEBERG KOCH, P.L.C. • ADDED 2/20 and are issued only for the specific project noted on these drawings. Any reproductions, revisions, or modifications of these documents without the expressed written consent of Fugleberg Koch, P.L.C. is prohibited by law.

FUGLEBERG KOCH
2555 Temple Trail, Winter Park, FL 32789 (407) 629-0595
www.fuglebergkoch.com BR569

CONSULTANT
Joseph, Lawrence & Co
Consulting Engineers
1180 HARWOOD AVE. SUITE 3000
ALTAMONTE SPRINGS, FLORIDA 32714
TEL: 321.972.4466
WWW.JLCENG.COM
CA NO. 28730

JLC 17.0137.00

Blake Lawrence Suddeth
P.E. #: 69060

SUMMER BAY APTS. II
LAKE COUNTY, FL

Drawn:	MJR/KCM
Checked:	BLS/AJB
Approval:	BLS/AJB
Date:	11/10/2017
Project #:	5389

BUILDING TYPE 2 - LEVEL 2
PLAN - LIGHTING

E3.07

GENERAL NOTES:

A. DO NOT SCALE ELECTRICAL DRAWING FOR ANY DIMENSIONS.

B. ALL WORK SHALL COMPLY WITH THE 2011 NATIONAL ELECTRIC CODE, NATIONAL, STATE AND LOCAL CODES. PROVIDE GROUNDING AND BONDING PER NEC 250.

C. SEE SINGLE LINE DIAGRAM FOR FEEDER WIRE AND CONDUIT SIZE. ALL CIRCUITS NOT SIZED ON DRAWING SHALL BE INSTALLED TO MEET MINIMUM SIZE REQUIRED BY NEC. ALL CONDUCTORS SHALL HAVE AN EQUIPMENT GROUND WIRE SIZED PER NEC.

D. FIELD VERIFY EXACT LOCATION OF ALL DEVICES AND EQUIPMENT PRIOR TO ROUGH IN.

E. REFER TO ENLARGED TYPICAL UNIT PLANS FOR ALL ELECTRICAL IN UNITS.

REFERENCE NOTES: ⟨X⟩

⟨1⟩ COORDINATE MOUNTING HEIGHT AND LOCATION OF FIXTURE OVER STAIR WITH ARCHITECT PRIOR TO ROUGH-IN.

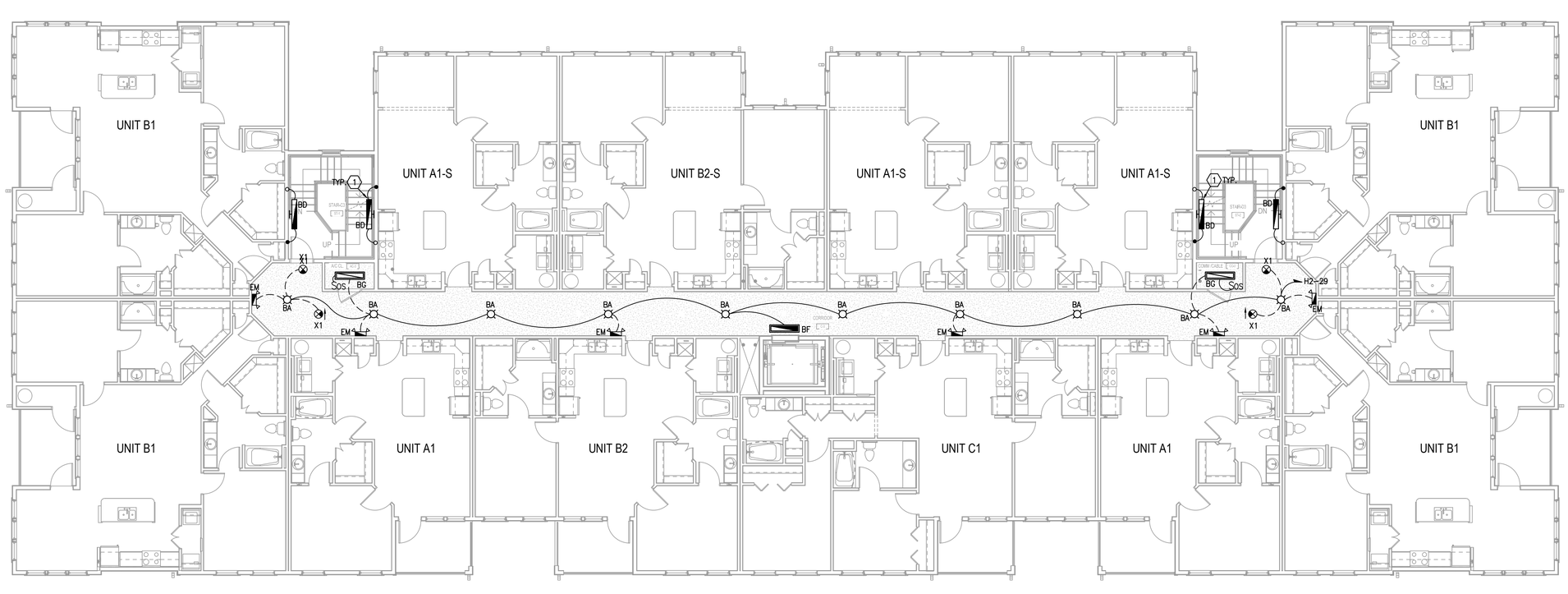

H1 BUILDING TYPE 2 - LEVEL 3 - LIGHTING
1/8" = 1'-0"

PERMIT REVIEW STAMP

ISSUE HISTORY

No.	Date	Description
1	10/06/2017	COORDINATION SET
2	11/10/2017	75%-90% REVIEW COORD. SET

REVISION HISTORY

No.	Date	Description

© 2015 These drawings and their contents are the property of FUGLEBERG KOCH, P.L.L.C. • 4250021203 and are issued only for the specific project noted on these drawings. Any reproductions, revisions, or modifications of these documents without the expressed written consent of Fugleberg Koch, P.L.L.C. is prohibited by law.

FUGLEBERG KOCH
2555 Temple Trail, Winter Park, FL 32789 (407) 629-0595
www.fuglebergkoch.com BR569

CONSULTANT
Joseph, Lawrence & Co
Consulting Engineers
1180 HARWOOD AVE. SUITE 3000
ALTAMONTE SPRINGS, FLORIDA 32714
TEL: 321.972.4466
WWW.JLCENG.COM
CA NO. 28730

JLC 17.0137.00

Blake Lawrence Suddeth
P.E. #: 69060

SUMMER BAY APTS. II	Drawn: MJR/KCM
LAKE COUNTY, FL	Checked: BLS/AJB
	Approval: BLS/AJB
	Date: 11/10/2017
	Project #: 5389

BUILDING TYPE 2 - LEVEL 3 PLAN - LIGHTING

E3.08

GENERAL NOTES:

A. DO NOT SCALE ELECTRICAL DRAWING FOR ANY DIMENSIONS.

B. ALL WORK SHALL COMPLY WITH THE 2011 NATIONAL ELECTRIC CODE, NATIONAL, STATE AND LOCAL CODES. PROVIDE GROUNDING AND BONDING PER NEC 250.

C. SEE SINGLE LINE DIAGRAM FOR FEEDER WIRE AND CONDUIT SIZE. ALL CIRCUITS NOT SIZED ON DRAWING SHALL BE INSTALLED TO MEET MINIMUM SIZE REQUIRED BY NEC. ALL CONDUCTORS SHALL HAVE AN EQUIPMENT GROUND WIRE SIZED PER NEC.

D. FIELD VERIFY EXACT LOCATION OF ALL DEVICES AND EQUIPMENT PRIOR TO ROUGH IN.

E. REFER TO ENLARGED TYPICAL UNIT PLANS FOR ALL ELECTRICAL IN UNITS.

REFERENCE NOTES: (X)

(1) COORDINATE MOUNTING HEIGHT AND LOCATION OF FIXTURE OVER STAIR WITH ARCHITECT PRIOR TO ROUGH-IN.

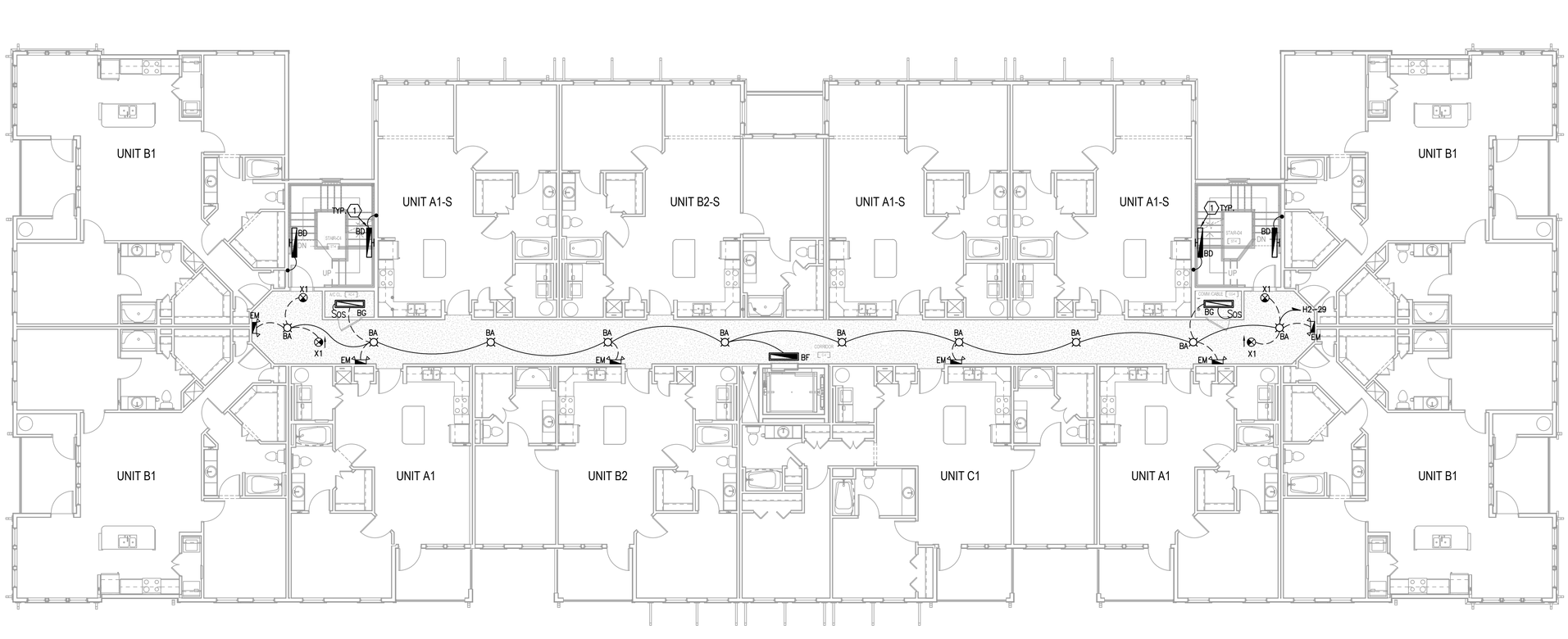

H1 BUILDING TYPE 2 - LEVEL 4 - LIGHTING
1/8" = 1'-0"

PERMIT REVIEW STAMP

ISSUE HISTORY

No.	Date	Description
1	10/06/2017	COORDINATION SET
2	11/10/2017	75%-90% REVIEW COORD. SET

REVISION HISTORY

No.	Date	Description

FUGLEBERG KOCH
2555 Temple Trail, Winter Park, FL 32789 (407) 629-0595
www.fuglebergkoch.com BR569

CONSULTANT
Joseph, Lawrence & Co
Consulting Engineers
1180 HARWOOD AVE. SUITE 3000
ALTAMONTE SPRINGS, FLORIDA 32714
TEL: 321.972.4466
WWW.JLCENG.COM
CA NO. 28730

JLC 17.0137.00

Blake Lawrence Suddeth
P.E. #: 69060

SUMMER BAY APTS. II
LAKE COUNTY, FL

Drawn:	MJR/KCM
Checked:	BLS/AJB
Approval:	BLS/AJB
Date:	11/10/2017
Project #:	5389

BUILDING TYPE 2 - LEVEL 4
PLAN - LIGHTING

E3.09

© 2015 These documents and their contents are the property of FUGLEBERG KOCH, PLLC - AA26002103, and are issued only for the specific project noted on these drawings. Any reproductions, revisions, or modifications of these documents without the expressed written consent of Fugleberg Koch, PLLC is prohibited by law.

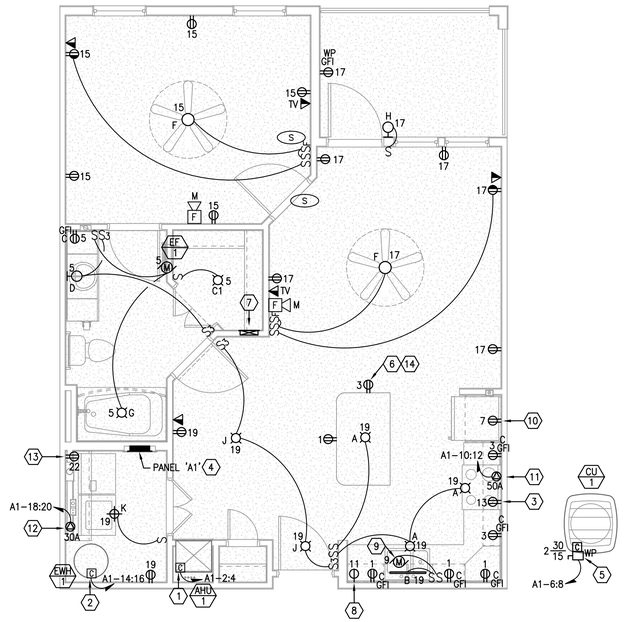

D1 ENLARGED TYPICAL UNIT TYPE 'A1' - ELECTRICAL
1/4" = 1'-0"

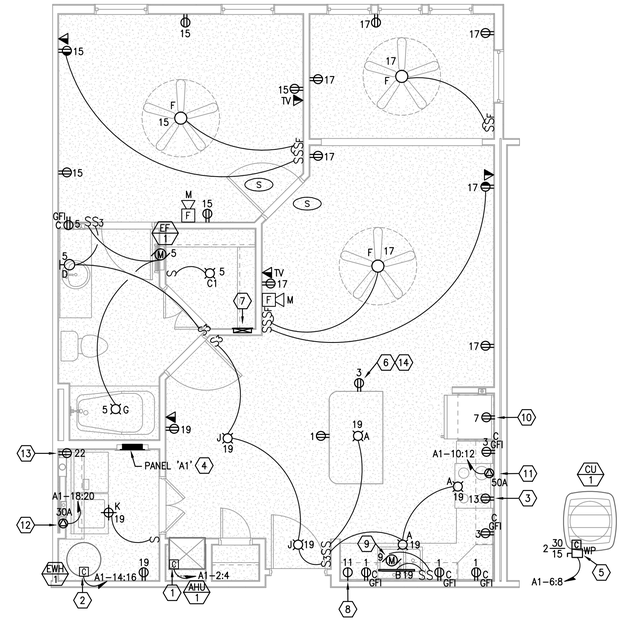

H1 ENLARGED TYPICAL UNIT TYPE 'A1S' - ELECTRICAL
1/4" = 1'-0"

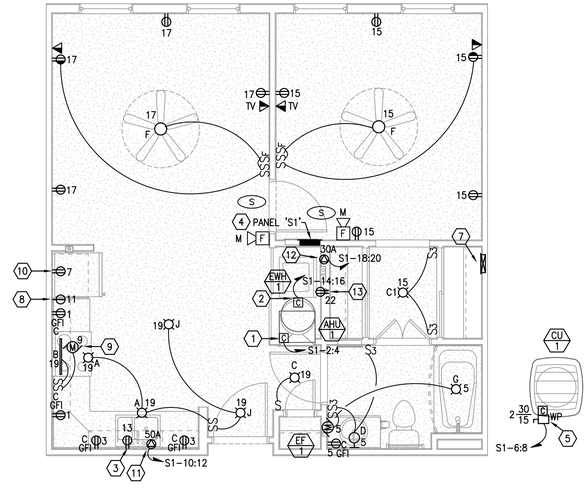

H5 ENLARGED TYPICAL UNIT TYPE 'S1' - ELECTRICAL
1/4" = 1'-0"

REFERENCE NOTES: ⓧ

1. CONNECT MECHANICAL UNIT VIA INTEGRAL DISCONNECT PROVIDED WITH UNIT. COORDINATE EXACT REQUIREMENTS WITH MECHANICAL CONTRACTOR PRIOR TO ROUGH-IN.
2. PROVIDE CIRCUIT BREAKER FEEDING WATER HEATER WITH "LOCK OUT" STYLE BREAKER HANDLE PER NEC 422.31.
3. PROVIDE 120V ELECTRICAL CONNECTION FOR MICROWAVE/HOOD CONNECTION. INSTALL JUNCTION BOX AT 78"AFF INSIDE THE CABINET. COORDINATE LOCATION WITH MILLWORK INSTALLER PRIOR TO ROUGH-IN.
4. REFER TO POWER RISER DIAGRAM AND UNIT PANEL SCHEDULES FOR ADDITIONAL INFORMATION.
5. PROVIDE ELECTRICAL CONNECTION TO UNIT'S ASSOCIATED CONDENSING UNIT. COORDINATE LOCATION WITH MECHANICAL CONTRACTOR PRIOR TO ROUGH-IN. COORDINATE ROUTING OF CONDUIT THROUGH BUILDING WITH GENERAL CONTRACTOR PRIOR TO ROUGH-IN. INCREASE WIRE SIZE AS REQUIRED FOR CIRCUIT LENGTH PER FBC AND NEC.
6. PROVIDE COMBINATION 120V TAMPER RESISTANT RECEPTACLE AND USB CHARGER OUTLET (COOPER #TR7741 OR APPROVED SUBSTITUTION). COLOR AS SELECTED BY OWNER. PROVIDE JUNCTION BOX SIZED AS REQUIRED BY NEC AND MANUFACTURER FOR DEVICE. COORDINATE OUTLET LOCATION WITH OWNER PRIOR TO ROUGH-IN.
7. 12"x18"x3" DEEP FLUSH MOUNTED CABINET WITH DOOR FOR TELEPHONE AND TV CABLE TERMINATIONS. "NTC" CABINET. INSTALL AT 52"AFF TO BOTTOM OF CABINET. CONTRACTOR TO PULL AND LABEL ALL LINES IN STAR CONFIGURATION.
8. PROVIDE 120V CONNECTION FOR DISHWASHER. COORDINATE CONNECTION REQUIREMENTS AND LOCATION WITH EQUIPMENT INSTALLER PRIOR TO ROUGH-IN.
9. PROVIDE 120V CONNECTION FOR GARBAGE DISPOSAL. COORDINATE CONNECTION REQUIREMENTS AND LOCATION WITH EQUIPMENT INSTALLER PRIOR TO ROUGH-IN.
10. PROVIDE 120V OUTLET FOR REFRIGERATOR, 48"AFF.
11. PROVIDE 240V/50A/1ø OUTLET FOR RANGE. COORDINATE PLUG CONFIGURATION AND LOCATION WITH EQUIPMENT INSTALLER PRIOR TO ROUGH-IN.
12. PROVIDE 240V/30A/1ø OUTLET FOR DRYER. COORDINATE PLUG CONFIGURATION AND LOCATION WITH EQUIPMENT INSTALLER PRIOR TO ROUGH-IN.
13. PROVIDE 120V OUTLET FOR WASHER, 36"AFF.
14. LOCATE 120V RECEPTACLE IN LOW WALL BELOW COUNTER HEIGHT. COORDINATE LOCATION WITH OWNER PRIOR TO ROUGH-IN. PER NEC 210.52(C)(5)

GENERAL NOTES:

A. DO NOT SCALE ELECTRICAL DRAWINGS FOR ANY DIMENSIONS.

B. ALL WORK SHALL COMPLY WITH THE 2011 NATIONAL ELECTRIC CODE, NATIONAL, STATE AND LOCAL CODES. PROVIDE GROUNDING AND BONDING PER NEC 250.

C. SEE SINGLE LINE DIAGRAM FOR FEEDER WIRE AND CONDUIT SIZE. ALL CIRCUITS NOT SIZED ON DRAWING SHALL BE INSTALLED TO MEET MINIMUM SIZE REQUIRED BY NEC. ALL CONDUCTORS SHALL HAVE AN EQUIPMENT GROUND WIRE SIZED PER NEC.

D. FIELD VERIFY EXACT LOCATION OF ALL DEVICES AND EQUIPMENT PRIOR TO ROUGH IN.

E. ALL 120V, SINGLE PHASE, 15A AND 20A BRANCH CIRCUITS SUPPLYING OUTLETS INSTALLED IN DWELING UNIT FAMILY ROOMS, DINING ROOMS, LIVING ROOMS, DENS, BEDROOMS, CLOSETS, HALLWAYS OR SIMILAR ROOMS OR AREAS SHALL BE PROTECTED BY A LISTED ARC-FAULT CIRCUIT INTERRUPTER, COMBINATION-TYPE INSTALLED TO PROVIDE PROTECTION OF THE BRANCH CIRCUIT AS REQUIRED BY NEC 210.12 AND LOCAL ORDINANCES.

F. ALL 125V, 15A AND 20A RECEPTACLES INSTALLED IN DWELLING UNITS SHALL BE LISTED TAMPER-RESISTANT AS REQUIRED BY NEC 406.12.

G. ALL SMOKE DETECTORS IN DWELLING UNITS SHALL BE INTERCONNECTED AND INSTALLED IN ACCORDANCE WITH NFPA 101, 2015 EDITION, SECTION 30.3.4.5.

H. ALL FIRE ALARM NOTIFICATION APPLIANCES LOCATED IN SLEEPING AREAS SHALL BE OF A LOW FREQUENCY SIGNAL TYPE IN ACCORDANCE WITH NFPA 72, 2014 EDITION, SECTION 18.4.5.3.

PERMIT REVIEW STAMP

ISSUE HISTORY

No.	Date	Description
1	10/06/2017	COORDINATION SET
2	11/10/2017	75%-90% REVIEW COORD. SET

REVISION HISTORY

No.	Date	Description

© 2015 These documents and their contents are the property of FUGLEBERG KOCH, P.L.C. (407)629-0595 and are issued only for the specific project noted on these drawings. Any reproductions, revisions, or modifications of these documents without the expressed written consent of Fugleberg Koch, P.L.C. is prohibited by law.

FUGLEBERG KOCH
2555 Temple Trail, Winter Park, FL 32789 (407) 629-0595
www.fuglebergkoch.com BR569

CONSULTANT
Joseph, Lawrence & Co
Consulting Engineers
1180 HARWOOD AVE. SUITE 3000
ALTAMONTE SPRINGS, FLORIDA 32714
TEL: 321.972.4466
WWW.JLCENG.COM
CA NO. 28730

JLC 17.0137.00

Blake Joseph Bardsley
P.E. #: 69024

SUMMER BAY APTS. II
LAKE COUNTY, FL

Drawn:	MJR/KCM
Checked:	BLS/AJB
Approval:	BLS/AJB
Date:	11/10/2017
Project #:	5389

ENLARGED TYPICAL UNIT PLANS - ELECTRICAL

E4.01

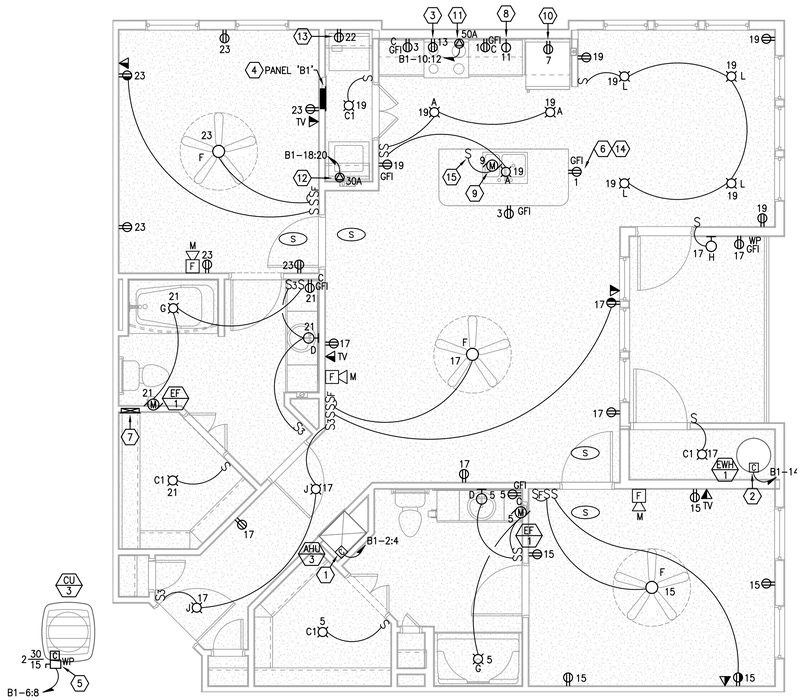

D1 ENLARGED TYPICAL UNIT TYPE 'B1' - ELECTRICAL

1/4" = 1'-0"

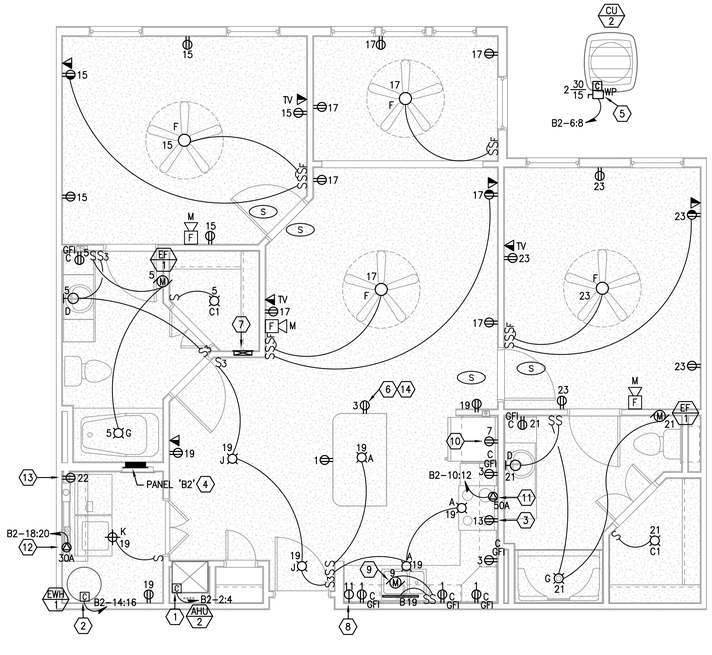

H1 ENLARGED TYPICAL UNIT TYPE 'B2S' - ELECTRICAL

1/4" = 1'-0"

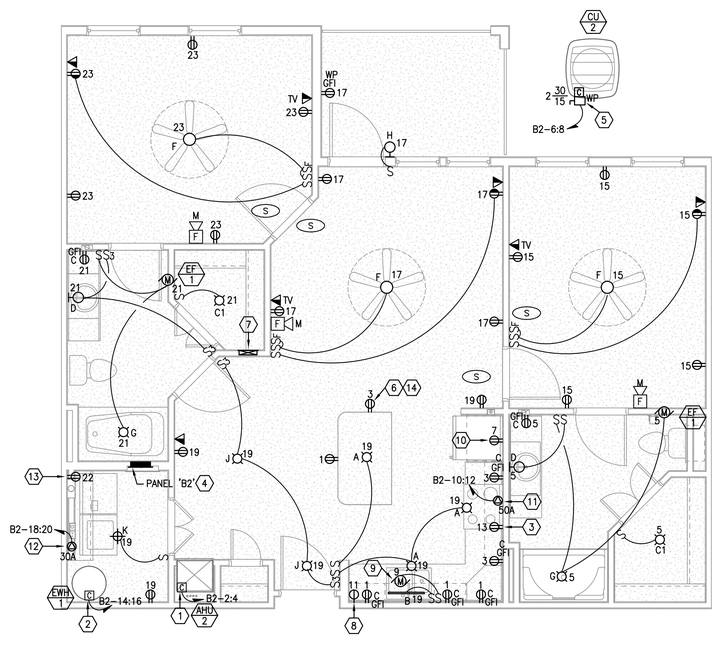

H5 ENLARGED TYPICAL UNIT TYPE 'B2' - ELECTRICAL

1/4" = 1'-0"

REFERENCE NOTES: ⓧ

1. CONNECT MECHANICAL UNIT VIA INTEGRAL DISCONNECT PROVIDED WITH UNIT. COORDINATE EXACT REQUIREMENTS WITH MECHANICAL CONTRACTOR PRIOR TO ROUGH-IN.
2. PROVIDE CIRCUIT BREAKER FEEDING WATER HEATER WITH "LOCK OUT" STYLE BREAKER HANDLE PER NEC 422.31.
3. PROVIDE 120V ELECTRICAL CONNECTION FOR MICROWAVE/HOOD CONNECTION. INSTALL JUNCTION BOX AT 78"AFF INSIDE THE CABINET. COORDINATE LOCATION WITH MILLWORK INSTALLER PRIOR TO ROUGH-IN.
4. REFER TO POWER RISER DIAGRAM AND UNIT PANEL SCHEDULES FOR ADDITIONAL INFORMATION.
5. PROVIDE ELECTRICAL CONNECTION TO UNIT'S ASSOCIATED CONDENSING UNIT. COORDINATE LOCATION WITH MECHANICAL CONTRACTOR PRIOR TO ROUGH-IN. COORDINATE ROUTING OF CONDUIT THROUGH BUILDING WITH GENERAL CONTRACTOR PRIOR TO ROUGH-IN. INCREASE WIRE SIZE AS REQUIRED FOR CIRCUIT LENGTH PER FBC AND NEC.
6. PROVIDE COMBINATION 120V TAMPER RESISTANT RECEPTACLE AND USB CHARGER OUTLET (COOPER #TR7741 OR APPROVED SUBSTITUTION). COLOR AS SELECTED BY OWNER. PROVIDE JUNCTION BOX SIZED AS REQUIRED BY NEC AND MANUFACTURER FOR DEVICE. COORDINATE OUTLET LOCATION WITH OWNER PRIOR TO ROUGH-IN.
7. 12"x18"x3" DEEP FLUSH MOUNTED CABINET WITH DOOR FOR TELEPHONE AND TV CABLE TERMINATIONS. "NTC" CABINET. INSTALL AT 52"AFF TO BOTTOM OF CABINET. CONTRACTOR TO PULL AND LABEL ALL LINES IN STAR CONFIGURATION.
8. PROVIDE 120V CONNECTION FOR DISHWASHER. COORDINATE CONNECTION REQUIREMENTS AND LOCATION WITH EQUIPMENT INSTALLER PRIOR TO ROUGH-IN.
9. PROVIDE 120V CONNECTION FOR GARBAGE DISPOSAL. COORDINATE CONNECTION REQUIREMENTS AND LOCATION WITH EQUIPMENT INSTALLER PRIOR TO ROUGH-IN.
10. PROVIDE 120V OUTLET FOR REFRIGERATOR, 48"AFF.
11. PROVIDE 240V/50A/1ø OUTLET FOR RANGE. COORDINATE PLUG CONFIGURATION AND LOCATION WITH EQUIPMENT INSTALLER PRIOR TO ROUGH-IN.
12. PROVIDE 240V/30A/1ø OUTLET FOR DRYER. COORDINATE PLUG CONFIGURATION AND LOCATION WITH EQUIPMENT INSTALLER PRIOR TO ROUGH-IN.
13. PROVIDE 120V OUTLET FOR WASHER, 36"AFF.
14. LOCATE 120V RECEPTACLE IN LOW WALL BELOW COUNTER HEIGHT. COORDINATE LOCATION WITH OWNER PRIOR TO ROUGH-IN. PER NEC 210.52(C)(5)
15. INSTALL SWITCH INSIDE OF CABINET. COORDINATE INSTALLATION WITH MANUFACTURER'S INSTRUCTIONS AND MILLWORK INSTALLER PRIOR TO ROUGH-IN.

GENERAL NOTES:

A. DO NOT SCALE ELECTRICAL DRAWINGS FOR ANY DIMENSIONS.

B. ALL WORK SHALL COMPLY WITH THE 2011 NATIONAL ELECTRIC CODE, NATIONAL, STATE AND LOCAL CODES. PROVIDE GROUNDING AND BONDING PER NEC 250.

C. SEE SINGLE LINE DIAGRAM FOR FEEDER WIRE AND CONDUIT SIZE. ALL CIRCUITS NOT SIZED ON DRAWING SHALL BE INSTALLED TO MEET MINIMUM SIZE REQUIRED BY NEC. ALL CONDUCTORS SHALL HAVE AN EQUIPMENT GROUND WIRE SIZED PER NEC.

D. FIELD VERIFY EXACT LOCATION OF ALL DEVICES AND EQUIPMENT PRIOR TO ROUGH IN.

E. ALL 120V, SINGLE PHASE, 15A AND 20A BRANCH CIRCUITS SUPPLYING OUTLETS INSTALLED IN DWELING UNIT FAMILY ROOMS, DINING ROOMS, LIVING ROOMS, DENS, BEDROOMS, CLOSETS, HALLWAYS OR SIMILAR ROOMS OR AREAS SHALL BE PROTECTED BY A LISTED ARC-FAULT CIRCUIT INTERRUPTER, COMBINATION-TYPE INSTALLED TO PROVIDE PROTECTION OF THE BRANCH CIRCUIT AS REQUIRED BY NEC 210.12 AND LOCAL ORDINANCES.

F. ALL 125V, 15A AND 20A RECEPTACLES INSTALLED IN DWELLING UNITS SHALL BE LISTED TAMPER-RESISTANT AS REQUIRED BY NEC 406.12.

G. ALL SMOKE DETECTORS IN DWELLING UNITS SHALL BE INTERCONNECTED AND INSTALLED IN ACCORDANCE WITH NFPA 101, 2015 EDITION, SECTION 30.3.4.5.

H. ALL FIRE ALARM NOTIFICATION APPLIANCES LOCATED IN SLEEPING AREAS SHALL BE OF A LOW FREQUENCY SIGNAL TYPE IN ACCORDANCE WITH NFPA 72, 2014 EDITION, SECTION 18.4.5.3.

PERMIT REVIEW STAMP

ISSUE HISTORY

No.	Date	Description
1	10/06/2017	COORDINATION SET
2	11/10/2017	75%-90% REVIEW COORD. SET

REVISION HISTORY

No.	Date	Description

© 2017 - These drawings and their contents are the property of FUGLEBERG KOCH, P.L.C. +40000103 and are issued only for the specific project noted on these drawings. Any reproductions, revisions, or modifications of these documents without the expressed written consent of Fugleberg Koch, P.L.C. is prohibited by law.

FUGLEBERG KOCH

2555 Temple Trail, Winter Park, FL 32789 (407) 629-0595
www.fuglebergkoch.com BR569

CONSULTANT

Joseph, Lawrence & Co
Consulting Engineers
1180 HARWOOD AVE. SUITE 3000
ALTAMONTE SPRINGS, FLORIDA 32714
TEL: 321.972.4466
WWW.JLCENG.COM
CA NO. 28730

JLC 17.0137.00

Blake Joseph Bardsley
P.E. #: 69024

Drawn:	MJR/KCM
Checked:	BLS/AJB
Approval:	BLS/AJB
Date:	11/10/2017
Project #:	5389

SUMMER BAY APTS. II

LAKE COUNTY, FL

ENLARGED TYPICAL UNIT PLANS - ELECTRICAL

E4.02

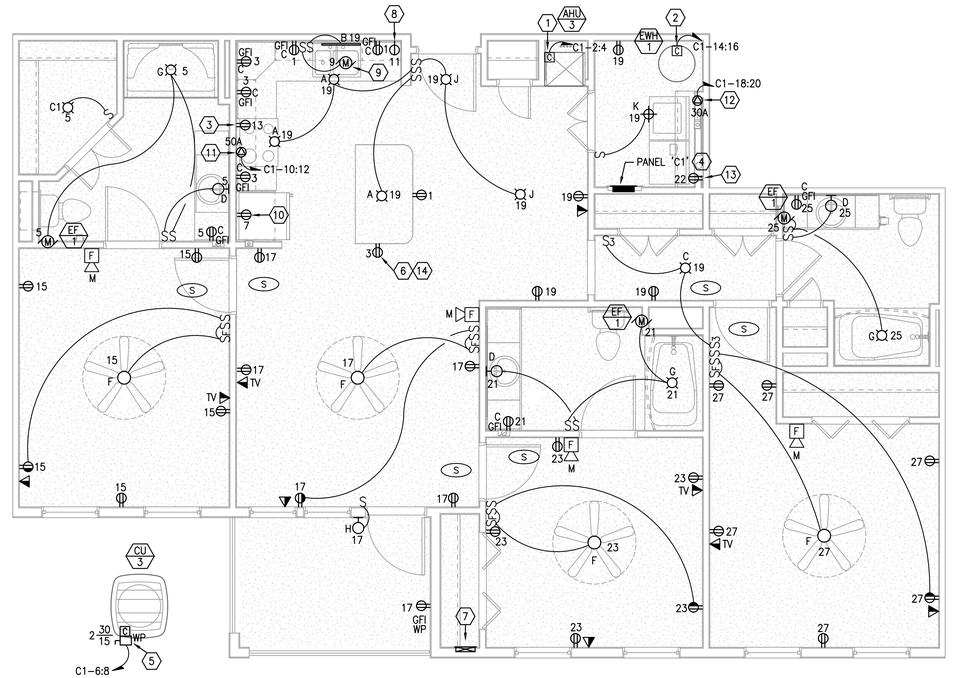

F4 ENLARGED TYPICAL UNIT TYPE 'C1' - ELECTRICAL
1/4" = 1'-0"

GENERAL NOTES:

A. DO NOT SCALE ELECTRICAL DRAWINGS FOR ANY DIMENSIONS.

B. ALL WORK SHALL COMPLY WITH THE 2011 NATIONAL ELECTRIC CODE, NATIONAL, STATE AND LOCAL CODES. PROVIDE GROUNDING AND BONDING PER NEC 250.

C. SEE SINGLE LINE DIAGRAM FOR FEEDER WIRE AND CONDUIT SIZE. ALL CIRCUITS NOT SIZED ON DRAWING SHALL BE INSTALLED TO MEET MINIMUM SIZE REQUIRED BY NEC. ALL CONDUCTORS SHALL HAVE AN EQUIPMENT GROUND WIRE SIZED PER NEC.

D. FIELD VERIFY EXACT LOCATION OF ALL DEVICES AND EQUIPMENT PRIOR TO ROUGH IN.

E. ALL 120V, SINGLE PHASE, 15A AND 20A BRANCH CIRCUITS SUPPLYING OUTLETS INSTALLED IN DWELING UNIT FAMILY ROOMS, DINING ROOMS, LIVING ROOMS, DENS, BEDROOMS, CLOSETS, HALLWAYS OR SIMILAR ROOMS OR AREAS SHALL BE PROTECTED BY A LISTED ARC-FAULT CIRCUIT INTERRUPTER, COMBINATION-TYPE INSTALLED TO PROVIDE PROTECTION OF THE BRANCH CIRCUIT AS REQUIRED BY NEC 210.12 AND LOCAL ORDINANCES.

F. ALL 125V, 15A AND 20A RECEPTACLES INSTALLED IN DWELLING UNITS SHALL BE LISTED TAMPER-RESISTANT AS REQUIRED BY NEC 406.12.

G. ALL SMOKE DETECTORS IN DWELLING UNITS SHALL BE INTERCONNECTED AND INSTALLED IN ACCORDANCE WITH NFPA 101, 2015 EDITION, SECTION 30.3.4.5.

H. ALL FIRE ALARM NOTIFICATION APPLIANCES LOCATED IN SLEEPING AREAS SHALL BE OF A LOW FREQUENCY SIGNAL TYPE IN ACCORDANCE WITH NFPA 72, 2014 EDITION, SECTION 18.4.5.3.

REFERENCE NOTES: ⓧ

1. CONNECT MECHANICAL UNIT VIA INTEGRAL DISCONNECT PROVIDED WITH UNIT. COORDINATE EXACT REQUIREMENTS WITH MECHANICAL CONTRACTOR PRIOR TO ROUGH-IN.
2. PROVIDE CIRCUIT BREAKER FEEDING WATER HEATER WITH "LOCK OUT" STYLE BREAKER HANDLE PER NEC 422.31.
3. PROVIDE 120V ELECTRICAL CONNECTION FOR MICROWAVE/HOOD CONNECTION. INSTALL JUNCTION BOX AT 78"AFF INSIDE THE CABINET. COORDINATE LOCATION WITH MILLWORK INSTALLER PRIOR TO ROUGH-IN.
4. REFER TO POWER RISER DIAGRAM AND UNIT PANEL SCHEDULES FOR ADDITIONAL INFORMATION.
5. PROVIDE ELECTRICAL CONNECTION TO UNIT'S ASSOCIATED CONDENSING UNIT. COORDINATE LOCATION WITH MECHANICAL CONTRACTOR PRIOR TO ROUGH-IN. COORDINATE ROUTING OF CONDUIT THROUGH BUILDING WITH GENERAL CONTRACTOR PRIOR TO ROUGH-IN. INCREASE WIRE SIZE AS REQUIRED FOR CIRCUIT LENGTH PER FBC AND NEC.
6. PROVIDE COMBINATION 120V TAMPER RESISTANT RECEPTACLE AND USB CHARGER OUTLET (COOPER #TR7741 OR APPROVED SUBSTITUTION). COLOR AS SELECTED BY OWNER. PROVIDE JUNCTION BOX SIZED AS REQUIRED BY NEC AND MANUFACTURER FOR DEVICE. COORDINATE OUTLET LOCATION WITH OWNER PRIOR TO ROUGH-IN.
7. 12"x18"x3" DEEP FLUSH MOUNTED CABINET WITH DOOR FOR TELEPHONE AND TV CABLE TERMINATIONS. "NTC" CABINET. INSTALL AT 52"AFF TO BOTTOM OF CABINET. CONTRACTOR TO PULL AND LABEL ALL LINES IN STAR CONFIGURATION.
8. PROVIDE 120V CONNECTION FOR DISHWASHER. COORDINATE CONNECTION REQUIREMENTS AND LOCATION WITH EQUIPMENT INSTALLER PRIOR TO ROUGH-IN.
9. PROVIDE 120V CONNECTION FOR GARBAGE DISPOSAL. COORDINATE CONNECTION REQUIREMENTS AND LOCATION WITH EQUIPMENT INSTALLER PRIOR TO ROUGH-IN.
10. PROVIDE 120V OUTLET FOR REFRIGERATOR, 48"AFF.
11. PROVIDE 240V/50A/1ø OUTLET FOR RANGE. COORDINATE PLUG CONFIGURATION AND LOCATION WITH EQUIPMENT INSTALLER PRIOR TO ROUGH-IN.
12. PROVIDE 240V/30A/1ø OUTLET FOR DRYER. COORDINATE PLUG CONFIGURATION AND LOCATION WITH EQUIPMENT INSTALLER PRIOR TO ROUGH-IN.
13. PROVIDE 120V OUTLET FOR WASHER, 36"AFF.
14. LOCATE 120V RECEPTACLE IN LOW WALL BELOW COUNTER HEIGHT. COORDINATE LOCATION WITH OWNER PRIOR TO ROUGH-IN. PER NEC 210.52(C)(5)

PERMIT REVIEW STAMP

ISSUE HISTORY

No.	Date	Description
1	10/06/2017	COORDINATION SET
2	11/10/2017	75%-90% REVIEW COORD. SET

REVISION HISTORY

No.	Date	Description

FUGLEBERG KOCH
2555 Temple Trail, Winter Park, FL 32789 (407) 629-0595
www.fuglebergkoch.com BR569

CONSULTANT
Joseph, Lawrence & Co
Consulting Engineers
1180 HARWOOD AVE. SUITE 3000
ALTAMONTE SPRINGS, FLORIDA 32714
TEL: 321.972.4466
WWW.JLCENG.COM
CA NO. 28730

JLC 17.0137.00

Blake Joseph Lawrence
P.E. #68024

SUMMER BAY APTS. II
LAKE COUNTY, FL

Drawn:	MJR/KCM
Checked:	BLS/AJB
Approval:	BLS/AJB
Date:	11/10/2017
Project #:	5389

ENLARGED TYPICAL UNIT PLANS - ELECTRICAL

E4.03

Unauthorized and other potential use of the property of FUGLEBERG KOCH, P.L.C. (407)629-0595 - and are issued only for the specific project noted on these drawings. Any reproductions, revisions, or modifications of these documents without the expressed written consent of Fuglebergkoch, P.L.C. is prohibited by law.
© 2017

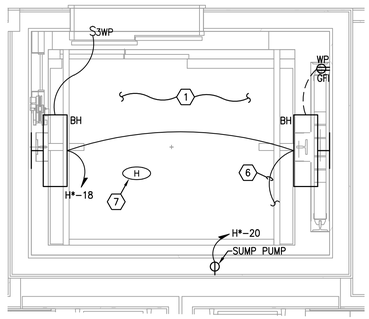

D5 ENLARGED PLAN - TYPICAL FIRST FLOOR ELEVATOR
1/2" = 1'-0"

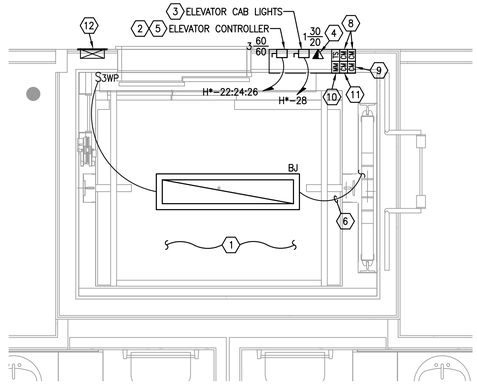

F5 ENLARGED PLAN - TYPICAL FOURTH FLOOR ELEVATOR
1/2" = 1'-0"

GENERAL NOTES:

A. DO NOT SCALE ELECTRICAL DRAWING FOR ANY DIMENSIONS.

B. ALL WORK SHALL COMPLY WITH THE 2011 NATIONAL ELECTRIC CODE, NATIONAL, STATE AND LOCAL CODES. PROVIDE GROUNDING AND BONDING PER NEC 250.

C. SEE SINGLE LINE DIAGRAM FOR FEEDER WIRE AND CONDUIT SIZE. ALL CIRCUITS NOT SIZED ON DRAWING SHALL BE INSTALLED TO MEET MINIMUM SIZE REQUIRED BY NEC. ALL CONDUCTORS SHALL HAVE AN EQUIPMENT GROUND WIRE SIZED PER NEC.

D. FIELD VERIFY EXACT LOCATION OF ALL DEVICES AND EQUIPMENT PRIOR TO ROUGH IN.

REFERENCE NOTES: (X)

(1) REFER TO ELEVATOR SHOP DRAWINGS FOR EXACT LOCATIONS OF ELECTRICAL WORK IN ELEVATOR PIT AND MACHINE ROOM. PROVIDE CONNECTION SWITCHES, LIGHTS AND RECEPTACLES AS PER NEC 620.23 AND 24. CONNECT FIRE ALARM AND TELEPHONE DEVICES IN ELEVATOR SHAFT LOBBY AND EQUIPMENT ROOM PER STATE FIRE MARSHALL REQUIREMENTS.

(2) PROVIDE LOCKABLE RK5 DISCONNECT SWITCH WITH 20A AUXILIARY CONTACTS, REJECTION CLIPS AND RK5 FUSES AS REQUIRED BY ELEVATOR INSTALLER. CONNECT ELEVATOR CONTROLLER. REFER TO PANEL SCHEDULES FOR ADDITIONAL INFORMATION.

(3) 30A, 120V LOCKABLE DISCONNECT SWITCH WITH REJECTION CLIPS AND 20A RK5 FUSE. LABEL "ELEVATOR CAB LIGHTS". CONNECT ELEVATOR CONTROLLERS: (2)#12 AND (1)#12 GND. IN 1/2"C.

(4) ELEVATOR CAB TELEPHONE. COORDINATE WITH ELEVATOR CONTRACTOR PRIOR TO ROUGH-IN.

(5) COORDINATE DISCONNECT SIZE, BREAKER SIZE, AND CONDUIT/CONDUCTOR SIZING WITH APPROVED ELEVATOR SHOP DRAWINGS AND PROVIDE AS REQUIRED.

(6) CONNECT ELEVATOR SHAFT LIGHTING ON TOP FLOOR TO ELEVATOR PIT LIGHTING ON FIRST FLOOR. FIXTURES TO BE CONTROLLED BY 3-WAY SWITCH AS SHOWN ON PLANS.

(7) MOUNT HEAT DETECTOR WITHIN 24" OF FIRE PROTECTION SPRINKLER HEAD. FIELD COORDINATE PRIOR TO ROUGH-IN.

(8) ELEVATOR RECALL CONTROL MODULES. COORDINATE WITH ELEVATOR CONTRACTOR PRIOR TO ROUGH-IN.

(9) ELEVATOR POWER SHUTDOWN CONTROL MODULE.

(10) ELEVATOR POWER SHUTDOWN CONTROL CIRCUIT SUPERVISORY MONITOR MODULE.

(11) ELEVATOR PHASE 1 EMERGENCY RECALL VISUAL SIGNAL CONTROL MODULE. COORDINATE TERMINATION REQUIREMENTS WITH ELEVATOR CONTROLLER.

(12) PROVIDE AREA OF REFUGE TWO-WAY COMMUNICATION SYSTEM AND CABLING TO MAIN BASE STATION AS REQUIRED BY 2012 IBC AND LIFE SAFETY CODE. COORDINATE LOCATION WITH OWNER AND AUTHORITY HAVING JURISDICTION PRIOR TO ROUGH-IN.

PERMIT REVIEW STAMP

ISSUE HISTORY

No.	Date	Description
1	10/06/2017	COORDINATION SET
2	11/10/2017	75%-90% REVIEW COORD. SET

REVISION HISTORY

No.	Date	Description

© 2015 These documents and their contents are the property of FUGLEBERG KOCH, P.L.C. +A20001203 and are issued only for the specific project noted on these drawings. Any reproductions, revisions, or modifications of these documents without the expressed written consent of Fugleberg Koch, P.L.C. is prohibited by law.

FUGLEBERG KOCH
2555 Temple Trail, Winter Park, FL 32789 (407) 629-0595
www.fuglebergkoch.com BR569

CONSULTANT
Joseph, Lawrence & Co
Consulting Engineers
1180 HARWOOD AVE. SUITE 3000
ALTAMONTE SPRINGS, FLORIDA 32714
TEL: 321.972.4466
WWW.JLCENG.COM
CA NO. 28730

JLC 17.0137.00

Blake Lawrence Suddeth
P.E. #: 69060

SUMMER BAY APTS. II
LAKE COUNTY, FL

Drawn:	MJR/KCM
Checked:	BLS/AJB
Approval:	BLS/AJB
Date:	11/10/2017
Project #:	5389

ENLARGED PLANS - ELEVATORS

E4.04

CONDUIT & CONDUCTOR SIZES: (X)

(A) 4 SETS [(4)#400 kcmil AL., 4"C.]

(B) (3)#2/0 AWG AL., (1)#4 AWG AL. GND., SER CABLE

GENERAL NOTES:

A. DO NOT SCALE ELECTRICAL DRAWING FOR ANY DIMENSIONS.

B. ALL WORK SHALL COMPLY WITH THE 2011 NATIONAL ELECTRIC CODE, NATIONAL, STATE AND LOCAL CODES. PROVIDE GROUNDING AND BONDING PER NEC 250

C. COORDINATE ALL WORK WITH LOCAL UTILITY COMPANY.

NOTE:
PER (FBC C405.7.3):
FEEDERS ARE DESIGNED FOR A MAXIMUM VOLTAGE DROP OF 2% AT DESIGN LOAD.
BRANCH CIRCUITS ARE DESIGNED FOR A MAXIMUM VOLTAGE DROP OF 3% AT DESIGN LOAD.

REFERENCE NOTES: (X)

(1) REFER TO CIVIL DRAWINGS FOR LOCATION OF UTILITY TRANSFORMER.

(2) COORDINATE ALL REQUIREMENTS WITH LOCAL UTILITY COMPANY PRIOR TO ROUGH-IN AND PROVIDE AS REQUIRED.

(3) COORDINATE ROUTING OF SERVICE ENTRANCE RATED CABLE WITH GENERAL CONTRACTOR AND ARCHITECT PRIOR TO ROUGH-IN.

(4) COORDINATE LOCATION WITH CIVIL DRAWINGS, OWNER AND UTILITY COMPANY PRIOR TO ROUGH-IN. PROVIDE METER LABELING AS REQUIRED BY UTILITY COMPANY.

(5) PROVIDE HARD WIRED SURGE PROTECTIVE DEVICE OF SAME MANUFACTURER AS PANEL/METER CENTER.

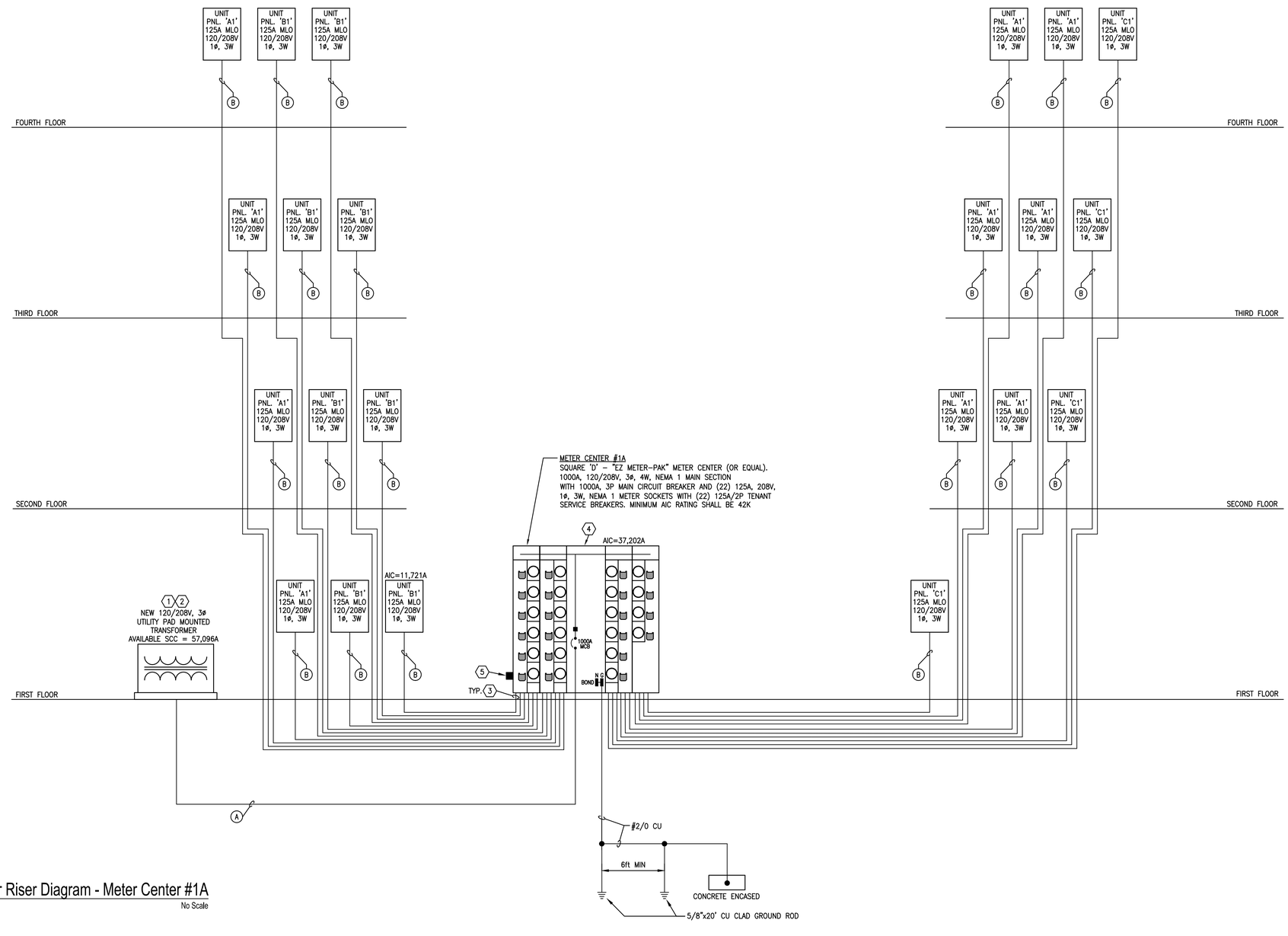

H1 Power Riser Diagram - Meter Center #1A
No Scale

PERMIT REVIEW STAMP

ISSUE HISTORY

No.	Date	Description
1	10/06/2017	COORDINATION SET
2	11/10/2017	75%-90% REVIEW COORD. SET

REVISION HISTORY

No.	Date	Description

© 2015 These drawings and their contents are the property of FUGLEBERG KOCH, P.L.C. +42000103 and are issued only for the specific project noted on these drawings. Any reproductions, revisions, or modifications of these documents without the expressed written consent of Fugleberg Koch, P.L.C. is prohibited by law.

FUGLEBERG KOCH
2555 Temple Trail, Winter Park, FL 32789 (407) 629-0595
www.fuglebergkoch.com BR569

CONSULTANT
Joseph, Lawrence & Co
Consulting Engineers
1180 HARWOOD AVE. SUITE 3000
ALTAMONTE SPRINGS, FLORIDA 32714
TEL: 321.972.4466
WWW.JLCENG.COM
CA NO. 28730

JLC 17.0137.00

Blake Lawrence Suddeth
P.E. #: 69060

SUMMER BAY APTS. II
LAKE COUNTY, FL

Drawn:	MJR/KCM
Checked:	BLS/AJB
Approval:	BLS/AJB
Date:	11/10/2017
Project #:	5389

RISER DIAGRAMS - ELECTRICAL

E5.01

CONDUIT & CONDUCTOR SIZES: (X)

- (A) 4 SETS [(4)#500 kcmil AL., 4"C.]
- (B) (3)#2/0 AWG AL., (1)#4 AWG AL. GND., SER CABLE
- (C) (4)#500 kcmil AL., (1)#2 AWG AL. GND., IN 4"C.
- (D) (3)#1/0 AWG AL., (1)#4 AWG AL. GND., SER CABLE

GENERAL NOTES:

A. DO NOT SCALE ELECTRICAL DRAWING FOR ANY DIMENSIONS.

B. ALL WORK SHALL COMPLY WITH THE 2011 NATIONAL ELECTRIC CODE, NATIONAL, STATE AND LOCAL CODES. PROVIDE GROUNDING AND BONDING PER NEC 250

C. COORDINATE ALL WORK WITH LOCAL UTILITY COMPANY.

NOTE:
PER (FBC C405.7.3):
FEEDERS ARE DESIGNED FOR A MAXIMUM VOLTAGE DROP OF 2% AT DESIGN LOAD.
BRANCH CIRCUITS ARE DESIGNED FOR A MAXIMUM VOLTAGE DROP OF 3% AT DESIGN LOAD.

REFERENCE NOTES: (X)

1. REFER TO CIVIL DRAWINGS FOR LOCATION OF UTILITY TRANSFORMER.
2. COORDINATE ALL REQUIREMENTS WITH LOCAL UTILITY COMPANY PRIOR TO ROUGH-IN AND PROVIDE AS REQUIRED.
3. COORDINATE ROUTING OF SERVICE ENTRANCE RATED CABLE WITH GENERAL CONTRACTOR AND ARCHITECT PRIOR TO ROUGH-IN.
4. COORDINATE LOCATION WITH CIVIL DRAWINGS, OWNER AND UTILITY COMPANY PRIOR TO ROUGH-IN. PROVIDE METER LABELING AS REQUIRED BY UTILITY COMPANY.
5. PROVIDE HARD WIRED SURGE PROTECTIVE DEVICE OF SAME MANUFACTURER AS PANEL/METER CENTER.

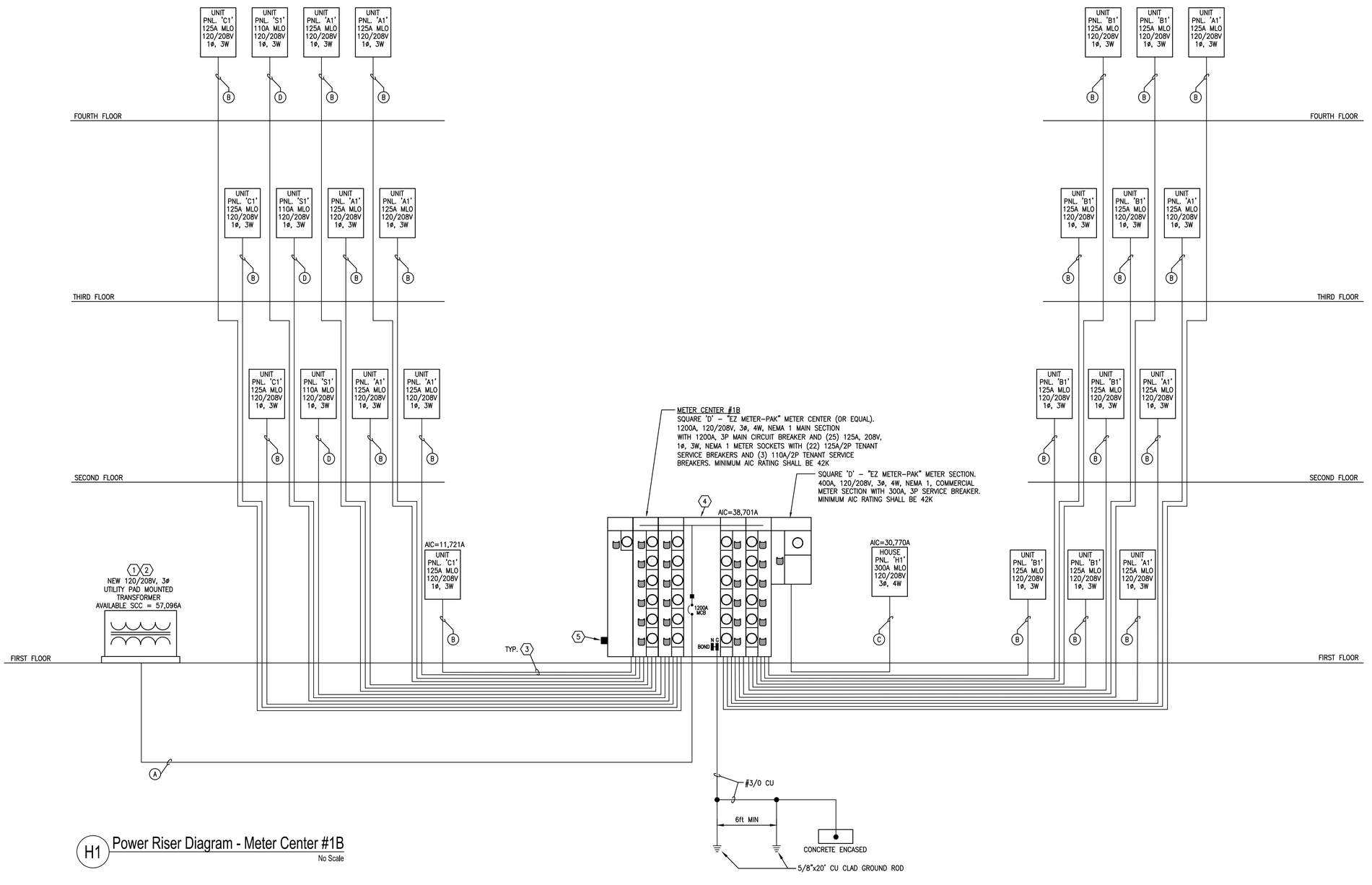

H1 Power Riser Diagram - Meter Center #1B
No Scale

PERMIT REVIEW STAMP

ISSUE HISTORY

No.	Date	Description
1	10/06/2017	COORDINATION SET
2	11/10/2017	75%-90% REVIEW COORD. SET

REVISION HISTORY

No.	Date	Description

© 2015 - These drawings and their contents are the property of FUGLEBERG KOCH, P.L.C. (v.4/2007) and are issued only for the specific project noted on these drawings. Any reproductions, revisions, or modifications of these documents without the expressed written consent of Fugleberg Koch, P.L.C. is prohibited by law.

FUGLEBERG KOCH
2555 Temple Trail, Winter Park, FL 32789 (407) 629-0595
www.fuglebergkoch.com BR569

CONSULTANT
Joseph, Lawrence & Co
Consulting Engineers
1180 HARWOOD AVE. SUITE 3000
ALTAMONTE SPRINGS, FLORIDA 32714
TEL: 321.972.4466
WWW.JLCENG.COM
CA NO. 28730

JLC 17.0137.00

Blake Lawrence Suddeth
P.E. #: 69060

SUMMER BAY APTS. II
LAKE COUNTY, FL

Drawn:	MJR/KCM
Checked:	BLS/AJB
Approval:	BLS/AJB
Date:	11/10/2017
Project #:	5389

RISER DIAGRAMS - ELECTRICAL

E5.02

CONDUIT & CONDUCTOR SIZES: (X)

(A) 4 SETS [(4)#400 kcmil AL., 4"C.]

(B) (3)#2/0 AWG AL., (1)#4 AWG AL. GND., SER CABLE

GENERAL NOTES:

A. DO NOT SCALE ELECTRICAL DRAWING FOR ANY DIMENSIONS.

B. ALL WORK SHALL COMPLY WITH THE 2011 NATIONAL ELECTRIC CODE, NATIONAL, STATE AND LOCAL CODES. PROVIDE GROUNDING AND BONDING PER NEC 250

C. COORDINATE ALL WORK WITH LOCAL UTILITY COMPANY.

NOTE:
PER (FBC C405.7.3):
FEEDERS ARE DESIGNED FOR A MAXIMUM VOLTAGE DROP OF 2% AT DESIGN LOAD.
BRANCH CIRCUITS ARE DESIGNED FOR A MAXIMUM VOLTAGE DROP OF 3% AT DESIGN LOAD.

REFERENCE NOTES: (X)

1. REFER TO CIVIL DRAWINGS FOR LOCATION OF UTILITY TRANSFORMER.
2. COORDINATE ALL REQUIREMENTS WITH LOCAL UTILITY COMPANY PRIOR TO ROUGH-IN AND PROVIDE AS REQUIRED.
3. COORDINATE ROUTING OF SERVICE ENTRANCE RATED CABLE WITH GENERAL CONTRACTOR AND ARCHITECT PRIOR TO ROUGH-IN.
4. COORDINATE LOCATION WITH CIVIL DRAWINGS, OWNER AND UTILITY COMPANY PRIOR TO ROUGH-IN. PROVIDE METER LABELING AS REQUIRED BY UTILITY COMPANY.
5. PROVIDE HARD WIRED SURGE PROTECTIVE DEVICE OF SAME MANUFACTURER AS PANEL/METER CENTER.

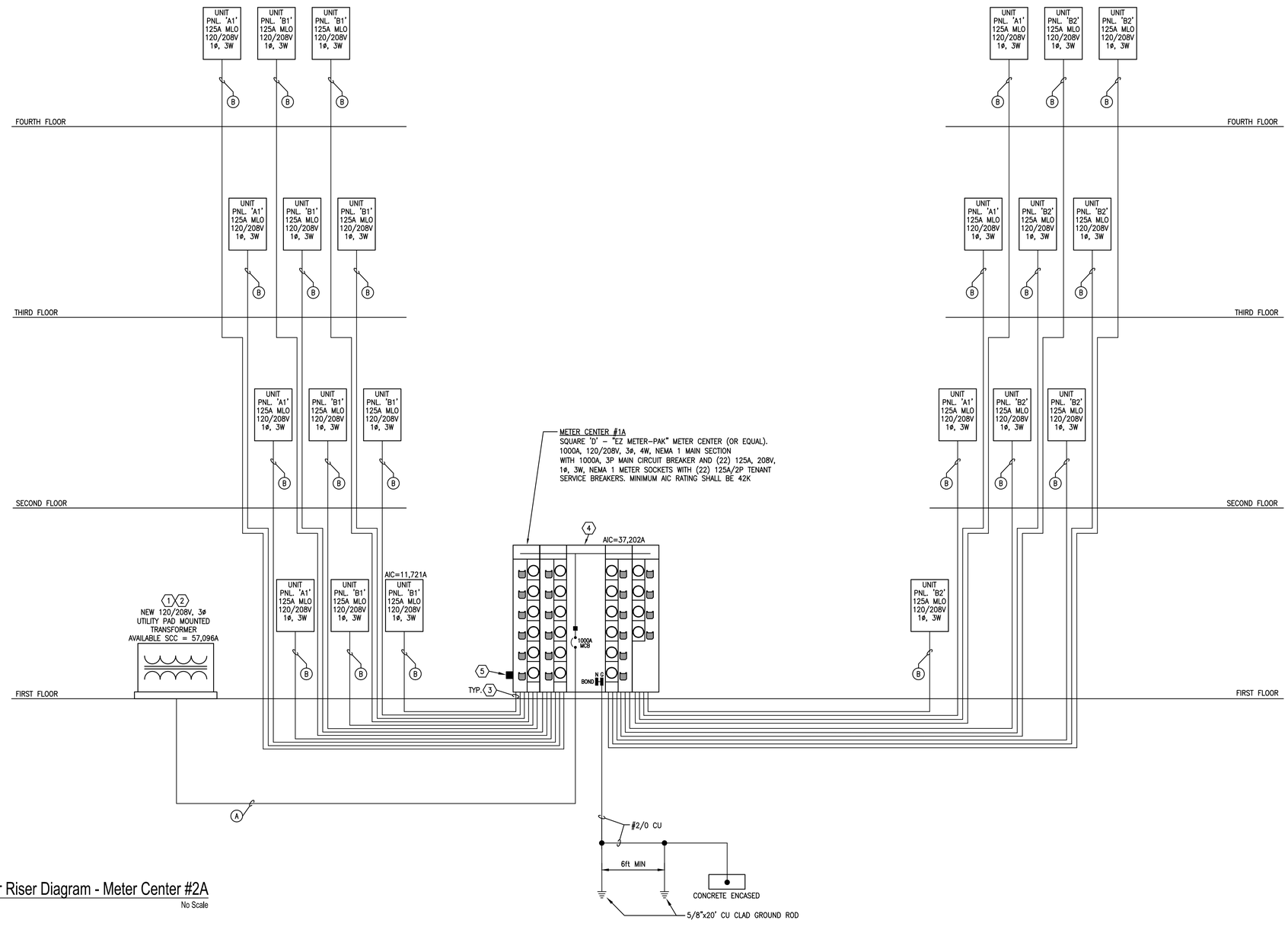

H1 Power Riser Diagram - Meter Center #2A
No Scale

PERMIT REVIEW STAMP

ISSUE HISTORY

No.	Date	Description
1	10/06/2017	COORDINATION SET
2	11/10/2017	75%-90% REVIEW COORD. SET

REVISION HISTORY

No.	Date	Description

FUGLEBERG KOCH
2555 Temple Trail, Winter Park, FL 32789 (407) 629-0595
www.fuglebergkoch.com BR569

CONSULTANT
Joseph, Lawrence & Co
Consulting Engineers
1180 HARWOOD AVE. SUITE 3000
ALTAMONTE SPRINGS, FLORIDA 32714
TEL: 321.972.4466
WWW.JLCENG.COM
CA NO. 28730

JLC 17.0137.00

Blake Lawrence Suddeth
P.E. #: 69060

SUMMER BAY APTS. II
LAKE COUNTY, FL

Drawn:	MJR/KCM
Checked:	BLS/AJB
Approval:	BLS/AJB
Date:	11/10/2017
Project #:	5389

RISER DIAGRAMS - ELECTRICAL

E5.03

© 2015 These documents and their contents are the property of FUGLEBERG KOCH, PLLC - AA26002103, and are issued only for the specific project noted on these drawings. Any reproductions, revisions, or modifications of these documents without the expressed written consent of Fugleberg Koch, PLLC is prohibited by law.

CONDUIT & CONDUCTOR SIZES: (X)

- (A) 4 SETS [(4)#500 kcmil AL., 4"C.]
- (B) (3)#2/0 AWG AL., (1)#4 AWG AL. GND., SER CABLE
- (C) (4)#500 kcmil AL., (1)#2 AWG AL. GND., IN 4"C.

GENERAL NOTES:

A. DO NOT SCALE ELECTRICAL DRAWING FOR ANY DIMENSIONS.

B. ALL WORK SHALL COMPLY WITH THE 2011 NATIONAL ELECTRIC CODE, NATIONAL, STATE AND LOCAL CODES. PROVIDE GROUNDING AND BONDING PER NEC 250

C. COORDINATE ALL WORK WITH LOCAL UTILITY COMPANY.

NOTE:
PER (FBC C405.7.3):
FEEDERS ARE DESIGNED FOR A MAXIMUM VOLTAGE DROP OF 2% AT DESIGN LOAD.
BRANCH CIRCUITS ARE DESIGNED FOR A MAXIMUM VOLTAGE DROP OF 3% AT DESIGN LOAD.

REFERENCE NOTES: (X)

1. REFER TO CIVIL DRAWINGS FOR LOCATION OF UTILITY TRANSFORMER.
2. COORDINATE ALL REQUIREMENTS WITH LOCAL UTILITY COMPANY PRIOR TO ROUGH-IN AND PROVIDE AS REQUIRED.
3. COORDINATE ROUTING OF SERVICE ENTRANCE RATED CABLE WITH GENERAL CONTRACTOR AND ARCHITECT PRIOR TO ROUGH-IN.
4. COORDINATE LOCATION WITH CIVIL DRAWINGS, OWNER AND UTILITY COMPANY PRIOR TO ROUGH-IN. PROVIDE METER LABELING AS REQUIRED BY UTILITY COMPANY.
5. PROVIDE HARD WIRED SURGE PROTECTIVE DEVICE OF SAME MANUFACTURER AS PANEL/METER CENTER.

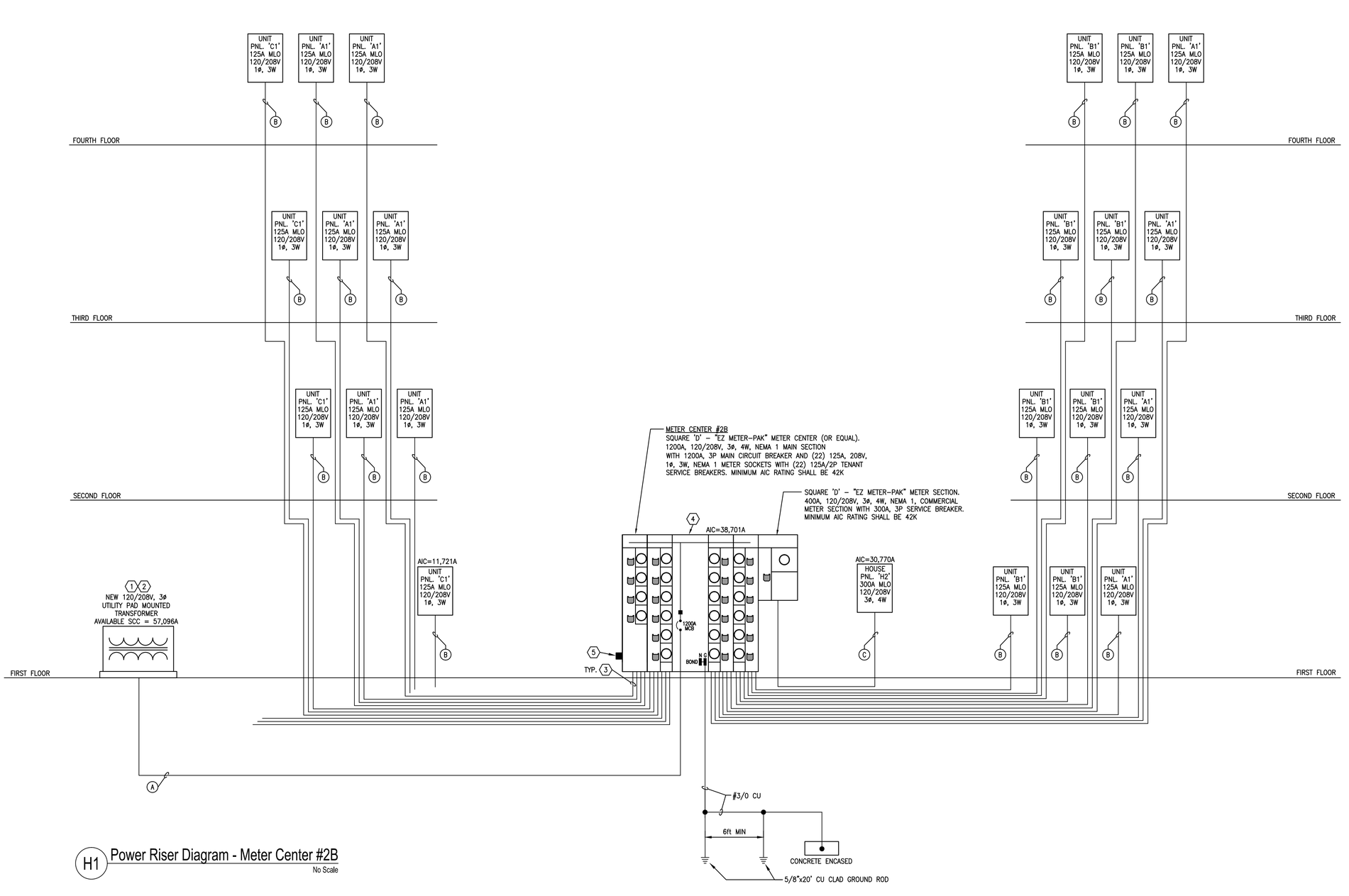

H1 Power Riser Diagram - Meter Center #2B
No Scale

PERMIT REVIEW STAMP

ISSUE HISTORY

No.	Date	Description
1	10/06/2017	COORDINATION SET
2	11/10/2017	75%-90% REVIEW COORD. SET

REVISION HISTORY

No.	Date	Description

© 2015 These drawings and their contents are the property of FUGLEBERG KOCH, P.L.C. +42000103 and are issued only for the specific project noted on these drawings. Any reproductions, revisions, or modifications of these documents without the expressed written consent of Fugleberg Koch, P.L.C. is prohibited by law.

FUGLEBERG KOCH
2555 Temple Trail, Winter Park, FL 32789 (407) 629-0595
www.fuglebergkoch.com BR569

CONSULTANT
Joseph, Lawrence & Co
Consulting Engineers
1180 HARWOOD AVE. SUITE 3000
ALTAMONTE SPRINGS, FLORIDA 32714
TEL: 321.972.4466
WWW.JLCENG.COM
CA NO. 28730

JLC 17.0137.00

Blake Lawrence Suddeth
P.E. #: 69060

SUMMER BAY APTS. II
LAKE COUNTY, FL

Drawn:	MJR/KCM
Checked:	BLS/AJB
Approval:	BLS/AJB
Date:	11/10/2017
Project #:	5389

RISER DIAGRAMS - ELECTRICAL

E5.04

RESIDENTIAL UNIT TYPE S1
ELECTRICAL SERVICE LOAD SUMMARY

620	SQUARE FT. x 3 VA	=	1,860	VA	(GENERAL LIGHTING/RECEPTACLE LOAD)
1,500	VA x 2	=	3,000	VA	(SMALL APPLIANCE LOAD)
1,500	VA x 1	=	1,500	VA	(WASHING MACHNE)
5,000	VA x 1	=	5,000	VA	(ELECTRIC DRYER)
4,500	VA x 1	=	4,500	VA	(ELECTRIC WATER HEATER)
1,200	VA x 1	=	1,200	VA	(DISHWASHER)
800	VA x 1	=	800	VA	(DISPOSAL)
840	VA x 1	=	840	VA	(REFRIGERATOR)
1,200	VA x 1	=	1,200	VA	(MICROVAVE/HOOD)
8,000	VA x 1	=	8,000	VA	(ELECTRIC RANGE/OVEN)
CONNECTED GENERAL LOAD		=	27,900	VA	
CONNECT HEAT/AC LOAD		=	5,696	VA	(PER NEC 220.82)
TOTAL CONNECTED LOAD		=	33,596	VA	
TOTAL DEMAND LOAD		=	22,856	VA	(PER NEC 220.82)
TOTAL DEMAND AMPS		=	109.88	AMPS	110A @ 208V/1PH SERVICE

RESIDENTIAL UNIT TYPES A1, A1S
ELECTRICAL SERVICE LOAD SUMMARY

740	SQUARE FT. x 3 VA	=	2,220	VA	(GENERAL LIGHTING/RECEPTACLE LOAD)
1,500	VA x 2	=	3,000	VA	(SMALL APPLIANCE LOAD)
1,500	VA x 1	=	1,500	VA	(WASHING MACHNE)
5,000	VA x 1	=	5,000	VA	(ELECTRIC DRYER)
4,500	VA x 1	=	4,500	VA	(ELECTRIC WATER HEATER)
1,200	VA x 1	=	1,200	VA	(DISHWASHER)
800	VA x 1	=	800	VA	(DISPOSAL)
840	VA x 1	=	840	VA	(REFRIGERATOR)
1,200	VA x 1	=	1,200	VA	(MICROVAVE/HOOD)
8,000	VA x 1	=	8,000	VA	(ELECTRIC RANGE/OVEN)
CONNECTED GENERAL LOAD		=	28,260	VA	
CONNECT HEAT/AC LOAD		=	5,696	VA	(PER NEC 220.82)
TOTAL CONNECTED LOAD		=	33,956	VA	
TOTAL DEMAND LOAD		=	23,000	VA	(PER NEC 220.82)
TOTAL DEMAND AMPS		=	110.58	AMPS	125A @ 208V/1PH SERVICE

RESIDENTIAL UNIT TYPE B1
ELECTRICAL SERVICE LOAD SUMMARY

1,320	SQUARE FT. x 3 VA	=	3,960	VA	(GENERAL LIGHTING/RECEPTACLE LOAD)
1,500	VA x 2	=	3,000	VA	(SMALL APPLIANCE LOAD)
1,500	VA x 1	=	1,500	VA	(WASHING MACHNE)
5,000	VA x 1	=	5,000	VA	(ELECTRIC DRYER)
4,500	VA x 1	=	4,500	VA	(ELECTRIC WATER HEATER)
1,200	VA x 1	=	1,200	VA	(DISHWASHER)
800	VA x 1	=	800	VA	(DISPOSAL)
840	VA x 1	=	840	VA	(REFRIGERATOR)
1,200	VA x 1	=	1,200	VA	(MICROVAVE/HOOD)
8,000	VA x 1	=	8,000	VA	(ELECTRIC RANGE/OVEN)
CONNECTED GENERAL LOAD		=	30,000	VA	
CONNECT HEAT/AC LOAD		=	5,864	VA	(PER NEC 220.82)
TOTAL CONNECTED LOAD		=	35,864	VA	
TOTAL DEMAND LOAD		=	23,864	VA	(PER NEC 220.82)
TOTAL DEMAND AMPS		=	114.73	AMPS	125A @ 208V/1PH SERVICE

RESIDENTIAL UNIT TYPES B2, B2S
ELECTRICAL SERVICE LOAD SUMMARY

1,110	SQUARE FT. x 3 VA	=	3,330	VA	(GENERAL LIGHTING/RECEPTACLE LOAD)
1,500	VA x 2	=	3,000	VA	(SMALL APPLIANCE LOAD)
1,500	VA x 1	=	1,500	VA	(WASHING MACHNE)
5,000	VA x 1	=	5,000	VA	(ELECTRIC DRYER)
4,500	VA x 1	=	4,500	VA	(ELECTRIC WATER HEATER)
1,200	VA x 1	=	1,200	VA	(DISHWASHER)
800	VA x 1	=	800	VA	(DISPOSAL)
840	VA x 1	=	840	VA	(REFRIGERATOR)
1,200	VA x 1	=	1,200	VA	(MICROVAVE/HOOD)
8,000	VA x 1	=	8,000	VA	(ELECTRIC RANGE/OVEN)
CONNECTED GENERAL LOAD		=	29,370	VA	
CONNECT HEAT/AC LOAD		=	5,696	VA	(PER NEC 220.82)
TOTAL CONNECTED LOAD		=	35,066	VA	
TOTAL DEMAND LOAD		=	23,444	VA	(PER NEC 220.82)
TOTAL DEMAND AMPS		=	112.71	AMPS	125A @ 208V/1PH SERVICE

RESIDENTIAL UNIT TYPE C1
ELECTRICAL SERVICE LOAD SUMMARY

1,330	SQUARE FT. x 3 VA	=	3,990	VA	(GENERAL LIGHTING/RECEPTACLE LOAD)
1,500	VA x 2	=	3,000	VA	(SMALL APPLIANCE LOAD)
1,500	VA x 1	=	1,500	VA	(WASHING MACHNE)
5,000	VA x 1	=	5,000	VA	(ELECTRIC DRYER)
4,500	VA x 1	=	4,500	VA	(ELECTRIC WATER HEATER)
1,200	VA x 1	=	1,200	VA	(DISHWASHER)
800	VA x 1	=	800	VA	(DISPOSAL)
840	VA x 1	=	840	VA	(REFRIGERATOR)
1,200	VA x 1	=	1,200	VA	(MICROVAVE/HOOD)
8,000	VA x 1	=	8,000	VA	(ELECTRIC RANGE/OVEN)
CONNECTED GENERAL LOAD		=	30,030	VA	
CONNECT HEAT/AC LOAD		=	5,864	VA	(PER NEC 220.82)
TOTAL CONNECTED LOAD		=	35,894	VA	
TOTAL DEMAND LOAD		=	23,876	VA	(PER NEC 220.82)
TOTAL DEMAND AMPS		=	114.79	AMPS	125A @ 208V/1PH SERVICE

RESIDENTIAL BUILDING TYPE I
LOAD SUMMARY - METER CENTER #1A

Unit Type A1	33,956	VA x 10	=	339,560	VA	
Unit Type B1	35,864	VA x 8	=	286,912	VA	
Unit Type C1	35,894	VA x 4	=	143,576	VA	
		VA x 0	=	0	VA	
		VA x 0	=	0	VA	
		VA x 0	=	0	VA	
		VA x 0	=	0	VA	
		VA x 0	=	0	VA	
TOTAL CONNECTED UNIT LOAD			=	770,048	VA	
TOTAL UNIT DEMAND LOAD			=	277,217	VA	(PER NEC 220.84)
TOTAL HOUSE PANEL LOAD			=	0	VA	
TOTAL DEMAND AMPS			=	770.05	AMPS	1000A @ 208V/3PH, 4W SERVICE

RESIDENTIAL BUILDING TYPE I
LOAD SUMMARY - METER CENTER #1B

Unit Type S1	33,596	VA x 3	=	100,788	VA	
Unit Type A1	33,956	VA x 10	=	339,560	VA	
Unit Type B1	35,864	VA x 8	=	286,912	VA	
Unit Type C1	35,894	VA x 4	=	143,576	VA	
		VA x 0	=	0	VA	
		VA x 0	=	0	VA	
		VA x 0	=	0	VA	
		VA x 0	=	0	VA	
TOTAL CONNECTED UNIT LOAD			=	870,836	VA	
TOTAL UNIT DEMAND LOAD			=	304,793	VA	(PER NEC 220.84)
TOTAL HOUSE PANEL LOAD			=	68,140	VA	
TOTAL DEMAND AMPS			=	1,035.92	AMPS	1200A @ 208V/3PH, 4W SERVICE

RESIDENTIAL BUILDING TYPE II
LOAD SUMMARY - METER CENTER #2A

Unit Type A1	33,956	VA x 7	=	237,692	VA	
Unit Type B1	35,864	VA x 8	=	286,912	VA	
Unit Type B2	35,066	VA x 7	=	245,462	VA	
		VA x 0	=	0	VA	
		VA x 0	=	0	VA	
		VA x 0	=	0	VA	
		VA x 0	=	0	VA	
		VA x 0	=	0	VA	
TOTAL CONNECTED UNIT LOAD			=	770,066	VA	
TOTAL UNIT DEMAND LOAD			=	277,224	VA	(PER NEC 220.84)
TOTAL HOUSE PANEL LOAD			=	0	VA	
TOTAL DEMAND AMPS			=	770.07	AMPS	1000A @ 208V/3PH, 4W SERVICE

RESIDENTIAL BUILDING TYPE II
LOAD SUMMARY - METER CENTER #2B

Unit Type A1	33,956	VA x 10	=	339,560	VA	
Unit Type B1	35,864	VA x 8	=	286,912	VA	
Unit Type C1	35,894	VA x 4	=	143,576	VA	
		VA x 0	=	0	VA	
		VA x 0	=	0	VA	
		VA x 0	=	0	VA	
		VA x 0	=	0	VA	
		VA x 0	=	0	VA	
TOTAL CONNECTED UNIT LOAD			=	770,048	VA	
TOTAL UNIT DEMAND LOAD			=	277,217	VA	(PER NEC 220.84)
TOTAL HOUSE PANEL LOAD			=	70,560	VA	
TOTAL DEMAND AMPS			=	966.05	AMPS	1200A @ 208V/3PH, 4W SERVICE

PERMIT REVIEW STAMP

ISSUE HISTORY

No.	Date	Description
1	10/06/2017	COORDINATION SET
2	11/10/2017	75%-90% REVIEW COORD. SET

REVISION HISTORY

No.	Date	Description

© 2015 These documents and their contents are the property of FUGLEBERG KOCH, PLLC • LA0000103 and are issued only for the specific project noted on these drawings. Any reproductions, revisions, or modifications of these documents without the expressed written consent of Fugleberg Koch, PLLC is prohibited by law.

FUGLEBERG KOCH

2555 Temple Trail, Winter Park, FL 32789 (407) 629-0595
www.fuglebergkoch.com BR569

CONSULTANT

Joseph, Lawrence & Co
Consulting Engineers
1180 HARWOOD AVE. SUITE 3000
ALTAMONTE SPRINGS, FLORIDA 32714
TEL: 321.972.4466
WWW.JLCENG.COM
CA NO. 28730

JLC 17.0137.00

Blake Lawrence Suddeth
P.E. #: 69060

SUMMER BAY APTS. II
LAKE COUNTY, FL

Drawn:	MJR/KCM
Checked:	BLS/AJB
Approval:	BLS/AJB
Date:	11/10/2017
Project #:	5389

SCHEDULES - ELECTRICAL

E6.01

TYPICAL UNIT PANEL 'S1'

LOCATION: 'A' UNIT TYPES | VOLTAGE: 120/208V 1ø 3W | MIN. AIC RATING: 22K AIC | NOTES: PROVIDE TYPED WRITTEN DIRECTORY
TYPE: SQUARE 'D' – TYPE QO | MAINS: 110A ☒ MLO ☐ MCB | MOUNTING: FLUSH | PROVIDE GROUND & NEUTRAL BUS
FED FROM: METER CENTER | LUGS: ☐ SUB-FEED ☐ FEED-THRU | ENCLOSURE: NEMA 1 | PROVIDE 'NM' WHERE ALLOWED BY AHJ

CKT	CIRCUIT DESCRIPTION	NOTES	BRANCH CIRCUIT ø	NEUT	GND	COND	BKR	LOAD KVA	PHASE ø	LOAD KVA	BKR	BRANCH CIRCUIT ø	NEUT	GND	COND	NOTES	CIRCUIT DESCRIPTION	CKT
1	KITCHEN RECEPTACLES		12	12	NM	20/1	1.50	A	1.96	30/2	10	–	10	NM		AHU-1	2
3	KITCHEN RECEPTACLES		12	12	NM	20/1	1.50	B	1.96	–	10	–	–	–		–	4
5	BATHROOM LIGHTS/RECEPTACLES		12	12	NM	20/1	1.50	A	0.68	15/2	12	–	12	1/2"		CU-1	6
7	REFRIG		14	14	NM	15/1	0.84	B	0.68	–	12	–	–	–		–	8
9	GARBAGE DISPOSAL		14	14	NM	15/1	0.60	A	4.00	50/2	6	–	10	NM		RANGE	10
11	DISHWASHER		14	14	NM	15/1	1.20	B	4.00	–	6	–	–	–		–	12
13	RANGE HOOD		14	14	NM	15/1	1.20	A	2.25	30/2	10	–	10	NM	2	EWH-1	14
15	BEDROOM LIGHTS/RECEPTACLES	1	14	14	NM	15/1	1.20	B	2.25	–	10	–	–	–		–	16
17	LIVING LIGHTS/RECEPTACLES	1	14	14	NM	15/1	1.20	A	2.50	30/2	10	–	10	NM		DRYER	18
19	KITCHEN LIGHTS/CORRIDOR RECEPTS.	1	14	14	NM	15/1	1.20	B	2.50	–	10	–	–	–		–	20
21	SPACE ONLY		–	–	–	–	–	A	1.50	20/1	12	12	12	NM		WASHER	22
23	SPACE ONLY		–	–	–	–	–	B	–	–	–	–	–	–		SPACE ONLY	24

EQUIPMENT SERVED	CONN. LOAD	L.F.	D.F.	DEMAND LOAD	

NOTES:
1) PROVIDE ARC-FAULT CIRCUIT BREAKER PER NEC 210.12
2) PROVIDE "LOCK OUT" STYLE BREAKER HANDLE PER NEC 422.31

TOTAL DEMAND AMPS: 109.88 AMPS PER UNIT SERVICE CALCULATION

TYPICAL UNIT PANEL 'A1'

LOCATION: 'A' UNIT TYPES | VOLTAGE: 120/208V 1ø 3W | MIN. AIC RATING: 22K AIC | NOTES: PROVIDE TYPED WRITTEN DIRECTORY
TYPE: SQUARE 'D' – TYPE QO | MAINS: 125A ☒ MLO ☐ MCB | MOUNTING: FLUSH | PROVIDE GROUND & NEUTRAL BUS
FED FROM: METER CENTER | LUGS: ☐ SUB-FEED ☐ FEED-THRU | ENCLOSURE: NEMA 1 | PROVIDE 'NM' WHERE ALLOWED BY AHJ

CKT	CIRCUIT DESCRIPTION	NOTES	BRANCH CIRCUIT ø	NEUT	GND	COND	BKR	LOAD KVA	PHASE ø	LOAD KVA	BKR	BRANCH CIRCUIT ø	NEUT	GND	COND	NOTES	CIRCUIT DESCRIPTION	CKT
1	KITCHEN RECEPTACLES		12	12	NM	20/1	1.50	A	1.96	30/2	10	–	10	NM		AHU-1	2
3	KITCHEN RECEPTACLES		12	12	NM	20/1	1.50	B	1.96	–	10	–	–	–		–	4
5	BATHROOM LIGHTS/RECEPTACLES		12	12	NM	20/1	1.50	A	0.68	15/2	12	–	12	1/2"		CU-1	6
7	REFRIG		14	14	NM	15/1	0.84	B	0.68	–	12	–	–	–		–	8
9	GARBAGE DISPOSAL		14	14	NM	15/1	0.60	A	4.00	50/2	6	–	10	NM		RANGE	10
11	DISHWASHER		14	14	NM	15/1	1.20	B	4.00	–	6	–	–	–		–	12
13	RANGE HOOD		14	14	NM	15/1	1.20	A	2.25	30/2	10	–	10	NM	2	EWH-1	14
15	BEDROOM LIGHTS/RECEPTACLES	1	14	14	NM	15/1	1.20	B	2.25	–	10	–	–	–		–	16
17	LIVING LIGHTS/RECEPTACLES	1	14	14	NM	15/1	1.20	A	2.50	30/2	10	–	10	NM		DRYER	18
19	KITCHEN LIGHTS/CORRIDOR RECEPTS.	1	14	14	NM	15/1	1.20	B	2.50	–	10	–	–	–		–	20
21	SPACE ONLY		–	–	–	–	–	A	1.50	20/1	12	12	12	NM		WASHER	22
23	SPACE ONLY		–	–	–	–	–	B	–	–	–	–	–	–		SPACE ONLY	24

EQUIPMENT SERVED	CONN. LOAD	L.F.	D.F.	DEMAND LOAD	

NOTES:
1) PROVIDE ARC-FAULT CIRCUIT BREAKER PER NEC 210.12
2) PROVIDE "LOCK OUT" STYLE BREAKER HANDLE PER NEC 422.31

TOTAL DEMAND AMPS: 110.58 AMPS PER UNIT SERVICE CALCULATION

TYPICAL UNIT PANEL 'B1'

LOCATION: 'B' UNIT TYPES | VOLTAGE: 120/208V 1ø 3W | MIN. AIC RATING: 22K AIC | NOTES: PROVIDE TYPED WRITTEN DIRECTORY
TYPE: SQUARE 'D' – TYPE QO | MAINS: 125A ☒ MLO ☐ MCB | MOUNTING: FLUSH | PROVIDE GROUND & NEUTRAL BUS
FED FROM: METER CENTER | LUGS: ☐ SUB-FEED ☐ FEED-THRU | ENCLOSURE: NEMA 1 | PROVIDE 'NM' WHERE ALLOWED BY AHJ

CKT	CIRCUIT DESCRIPTION	NOTES	BRANCH CIRCUIT ø	NEUT	GND	COND	BKR	LOAD KVA	PHASE ø	LOAD KVA	BKR	BRANCH CIRCUIT ø	NEUT	GND	COND	NOTES	CIRCUIT DESCRIPTION	CKT
1	KITCHEN RECEPTACLES		12	12	NM	20/1	1.50	A	1.96	30/2	10	–	10	NM		AHU-3	2
3	KITCHEN RECEPTACLES		12	12	NM	20/1	1.50	B	1.96	–	10	–	–	–		–	4
5	BATHROOM LIGHTS/RECEPTACLES		12	12	NM	20/1	1.50	A	1.18	20/2	10	–	10	3/4"		CU-3	6
7	REFRIG		14	14	NM	15/1	0.84	B	1.18	–	10	–	–	–		–	8
9	GARBAGE DISPOSAL		14	14	NM	15/1	0.60	A	4.00	50/2	6	–	10	NM		RANGE	10
11	DISHWASHER		14	14	NM	15/1	1.20	B	4.00	–	6	–	–	–		–	12
13	RANGE HOOD		14	14	NM	15/1	1.20	A	2.25	30/2	10	–	10	NM	2	EWH-1	14
15	BEDROOM LIGHTS/RECEPTACLES	1	14	14	NM	15/1	1.20	B	2.25	–	10	–	–	–		–	16
17	LIVING LIGHTS/RECEPTACLES	1	14	14	NM	15/1	1.20	A	2.50	30/2	10	–	10	NM		DRYER	18
19	KITCHEN LIGHTS/CORRIDOR RECEPTS.	1	14	14	NM	15/1	1.20	B	2.50	–	10	–	–	–		–	20
21	BATHROOM LIGHTS/RECEPTACLES		12	12	NM	20/1	1.50	A	1.50	20/1	12	12	12	NM		WASHER	22
23	BEDROOM LIGHTS/RECEPTACLES	1	14	14	NM	15/1	1.20	B	–	–	–	–	–	–		SPACE ONLY	24

EQUIPMENT SERVED	CONN. LOAD	L.F.	D.F.	DEMAND LOAD	

NOTES:
1) PROVIDE ARC-FAULT CIRCUIT BREAKER PER NEC 210.12
2) PROVIDE "LOCK OUT" STYLE BREAKER HANDLE PER NEC 422.31

TOTAL DEMAND AMPS: 114.73 AMPS PER UNIT SERVICE CALCULATION

TYPICAL UNIT PANEL 'B2'

LOCATION: 'B' UNIT TYPES | VOLTAGE: 120/208V 1ø 3W | MIN. AIC RATING: 22K AIC | NOTES: PROVIDE TYPED WRITTEN DIRECTORY
TYPE: SQUARE 'D' – TYPE QO | MAINS: 125A ☒ MLO ☐ MCB | MOUNTING: FLUSH | PROVIDE GROUND & NEUTRAL BUS
FED FROM: METER CENTER | LUGS: ☐ SUB-FEED ☐ FEED-THRU | ENCLOSURE: NEMA 1 | PROVIDE 'NM' WHERE ALLOWED BY AHJ

CKT	CIRCUIT DESCRIPTION	NOTES	BRANCH CIRCUIT ø	NEUT	GND	COND	BKR	LOAD KVA	PHASE ø	LOAD KVA	BKR	BRANCH CIRCUIT ø	NEUT	GND	COND	NOTES	CIRCUIT DESCRIPTION	CKT
1	KITCHEN RECEPTACLES		12	12	NM	20/1	1.50	A	1.96	30/2	10	–	10	NM		AHU-2	2
3	KITCHEN RECEPTACLES		12	12	NM	20/1	1.50	B	1.96	–	10	–	–	–		–	4
5	BATHROOM LIGHTS/RECEPTACLES		12	12	NM	20/1	1.50	A	0.86	15/2	10	–	10	3/4"		CU-2	6
7	REFRIG		14	14	NM	15/1	0.84	B	0.86	–	10	–	–	–		–	8
9	GARBAGE DISPOSAL		14	14	NM	15/1	0.60	A	4.00	50/2	6	–	10	NM		RANGE	10
11	DISHWASHER		14	14	NM	15/1	1.20	B	4.00	–	6	–	–	–		–	12
13	RANGE HOOD		14	14	NM	15/1	1.20	A	2.25	30/2	10	–	10	NM	2	EWH-1	14
15	BEDROOM LIGHTS/RECEPTACLES	1	14	14	NM	15/1	1.20	B	2.25	–	10	–	–	–		–	16
17	LIVING LIGHTS/RECEPTACLES	1	14	14	NM	15/1	1.20	A	2.50	30/2	10	–	10	NM		DRYER	18
19	KITCHEN LIGHTS/CORRIDOR RECEPTS.	1	14	14	NM	15/1	1.20	B	2.50	–	10	–	–	–		–	20
21	BATHROOM LIGHTS/RECEPTACLES		12	12	NM	20/1	1.50	A	1.50	20/1	12	12	12	NM		WASHER	22
23	BEDROOM LIGHTS/RECEPTACLES	1	14	14	NM	15/1	1.20	B	–	–	–	–	–	–		SPACE ONLY	24

EQUIPMENT SERVED	CONN. LOAD	L.F.	D.F.	DEMAND LOAD	

NOTES:
1) PROVIDE ARC-FAULT CIRCUIT BREAKER PER NEC 210.12
2) PROVIDE "LOCK OUT" STYLE BREAKER HANDLE PER NEC 422.31

TOTAL DEMAND AMPS: 112.71 AMPS PER UNIT SERVICE CALCULATION

LIGHTING FIXTURE SCHEDULE - TYPICAL UNITS

MARK	DESCRIPTION	MANUFACTURER	MODEL	VOLTS	LAMP QTY	LAMP WATTS	LAMP MODEL	FIXTURE WATTS
A	DECORATIVE LED CEILING MOUNT FIXTURE LOCATED IN KITCHEN	TBD	TBD	120	1	17	LED	17
B	2' LED STRIP LIGHT LOCATED ABOVE KITCHEN SINK	TBD	TBD	120	1	17	LED	17
C	DECORATIVE LED CEILING MOUNT FIXTURE LOCATED AT CLOSETS	TBD	TBD	120	1	17	LED	17
D	LED WALL MOUNTED VANITY LIGHT FIXTURE LOCATED ABOVE BATHROOM SINK	TBD	TBD	120	1	17	LED	17
F	52" CEILING FAN WITH LIGHT KIT LOCATED AT BEDROOMS AND LIVING ROOM	TBD	TBD	120	1	30	LED	30
G	LED SURFACE MOUNTED CLOSE-TO-TUB FIXTURE. UL DAMP LABEL RATED	TBD	TBD	120	1	17	LED	167
H	EXTERIOR STAINLESS STEEL BRACKET LED LIGHT WITH CLEAR GLASS LENS. UL WET LABEL RATED	TBD	TBD	120	1	17	LED	17
J	DECORATIVE LED CEILING MOUNT FIXTURE LOCATED AT HALLWAYS, CORRIDORS, AND ENTRY WAY	TBD	TBD	120	1	17	LED	17
K	DECORATIVE LED MINI-PENDANT FIXTURE LOCATED IN LAUNDRY ROOM	TBD	TBD	120	1	17	LED	17

NOTES:
1) DIVISION 16 CONTRACTOR SHALL VERIFY ALL FIXTURE TYPES AND FINISHES WITH OWNER PRIOR TO ORDERING.

TYPICAL UNIT PANEL C1

LOCATION: 'C' UNIT TYPES | VOLTAGE: 120/208V 1ø 3W | MIN. AIC RATING: 22 KAIC | NOTES: PROVIDE TYPED WRITTEN DIRECTORY
TYPE: SQUARE 'D' – TYPE QO | MAINS: 125A ☒ MLO ☐ MCB | MOUNTING: FLUSH | PROVIDE GROUND & NEUTRAL BUS
FED FROM: METER CENTER | LUGS: ☐ SUB-FEED ☐ FEED-THRU | ENCLOSURE: NEMA 1 | TYPE 'NM' CABLE WHERE APPROVED BY A.H.J.

CKT	CIRCUIT DESCRIPTION	NOTES	BRANCH CIRCUIT ø	NEUT	GND	COND	BKR	LOAD KVA	PHASE ø	LOAD KVA	BKR	BRANCH CIRCUIT ø	NEUT	GND	COND	NOTES	CIRCUIT DESCRIPTION	CKT
1	KITCHEN RECEPTACLES		12	12	NM	20/1	1.50	A	1.96	30/2	10	–	10	NM		AHU-3	2
3	KITCHEN RECEPTACLES		12	12	NM	20/1	1.50	B	1.96	–	10	–	–	–		–	4
5	BATHROOM LIGHTS/RECEPTACLES		12	12	NM	20/1	1.50	A	1.18	20/2	10	–	10	3/4"		CU-3	6
7	REFRIGERATOR		14	14	NM	15/1	0.84	B	1.18	–	10	–	–	–		–	8
9	GARBAGE DISPOSAL		14	14	NM	15/1	0.60	A	4.10	50/2	6	–	10	NM		RANGE	10
11	DISHWASHER		14	14	NM	15/1	1.20	B	4.10	50/2	6	–	–	–		–	12
13	RANGE HOOD		14	14	NM	15/1	0.60	A	2.25	30/2	10	–	10	NM	2	EWH-1	14
15	BEDROOM LIGHTS/RECEPTACLES	1	14	14	NM	15/1	0.50	B	2.25	–	10	–	–	–		–	16
17	LIVING ROOM LIGHTS/RECEPTACLES	1	14	14	NM	15/1	1.20	A	2.50	30/2	10	–	10	NM		DRYER	18
19	KITCHEN LIGHTS/CORRIDOR RECEPTS.	1	14	14	NM	15/1	1.20	B	2.50	–	10	–	–	–		–	20
21	BATHROOM LIGHTS/RECEPTACLES		12	12	NM	20/1	1.20	A	1.50	20/1	12	12	12	NM		WASHER	22
23	BEDROOM LIGHTS/RECEPTACLES	1	14	14	NM	15/1	1.20	B	–	–	–	–	–	–		SPACE ONLY	24
25	BATHROOM LIGHTS/RECEPTACLES		12	12	NM	20/1	1.20	A	–	–	–	–	–	–		SPACE ONLY	26
27	BEDROOM LIGHTS/RECEPTACLES	1	14	14	NM	15/1	1.20	B	–	–	–	–	–	–		SPACE ONLY	28

EQUIPMENT SERVED	CONN. LOAD	L.F.	D.F.	DEMAND LOAD	

NOTES:
1) PROVIDE ARC-FAULT CIRCUIT BREAKER PER NEC 210.12
2) PROVIDE "LOCK OUT" STYLE BREAKER HANDLE PER NEC 422.31

TOTAL DEMAND AMPS: 114.79 AMPS PER UNIT SERVICE CALCULATION

PERMIT REVIEW STAMP

ISSUE HISTORY

No.	Date	Description
1	10/06/2017	COORDINATION SET
2	11/10/2017	75%-90% REVIEW COORD. SET

REVISION HISTORY

No.	Date	Description

© 2015 These drawings and their contents are the property of FUGLEBERG KOCH, P.L.C. (4250012.00) and are loaned only for the specific project noted on these drawings. Any reproductions, revisions, or modifications of these documents without the expressed written consent of Fugleberg Koch, P.L.C. is prohibited by law.

FUGLEBERG KOCH
2555 Temple Trail, Winter Park, FL 32789 (407) 629-0595
www.fuglebergkoch.com BR569

CONSULTANT
Joseph, Lawrence & Co
Consulting Engineers
1180 HARWOOD AVE. SUITE 3000
ALTAMONTE SPRINGS, FLORIDA 32714
TEL: 321.972.4466
WWW.JLCENG.COM
CA NO. 28730

JLC 17.0137.00

Blake Lawrence Suddeth
P.E. #: 69060

SUMMER BAY APTS. II
LAKE COUNTY, FL

Drawn:	MJR/KCM
Checked:	BLS/AJB
Approval:	BLS/AJB
Date:	11/10/2017
Project #:	5389

SCHEDULES - ELECTRICAL

E6.02

PANEL H1 (SECTION 1)

LOCATION: BUILDING TYPE I | VOLTAGE: 208Y/120V 3ø 4W | MIN. AIC RATING: 22K AIC | NOTES: PROVIDE TYPED WRITTEN DIRECTORY PROVIDE GROUND & NEUTRAL BUS
TYPE: SQUARE-D | MAINS: 300A ☒ MLO ☐ MCB | MOUNTING: SURFACE
FED FROM: METER CENTER #1B | LUGS: ☐ SUB-FEED ☐ FEED-THRU | ENCLOSURE: NEMA 1

CKT	CIRCUIT DESCRIPTION	NOTES	BRANCH CIRCUIT ø	NEUT	GND	COND	BKR	LOAD KVA	PHASE ø	LOAD KVA	BKR	BRANCH CIRCUIT ø	NEUT	GND	COND	NOTES	CIRCUIT DESCRIPTION	CKT
1	RECEPS – CORRIDOR		10	10	10	1/2"	20/1	0.72	A	1.00	20/1	12	12	12	1/2"		GARAGE RECEPTACLES	2
3	RECEPS – CORRIDOR		10	10	10	1/2"	20/1	0.72	B	1.00	20/1	12	12	12	1/2"		GARAGE RECEPTACLES	4
5	RECEPS – CORRIDOR		10	10	10	1/2"	20/1	0.72	C	1.00	20/1	12	12	12	1/2"		GARAGE RECEPTACLES	6
7	RECEPS – CORRIDOR		10	10	10	1/2"	20/1	0.72	A	1.00	20/1	12	12	12	1/2"		GARAGE RECEPTACLES	8
9	RECEPS – CORRIDOR		10	10	10	1/2"	20/1	0.72	B	1.00	20/1	12	12	12	1/2"		GARAGE RECEPTACLES	10
11	RECEPS – CORRIDOR		10	10	10	1/2"	20/1	0.18	C	1.00	20/1	12	12	12	1/2"		GARAGE RECEPTACLES	12
13	RECEPS – TTB		12	12	12	1/2"	20/1	0.36	A	1.00	20/1	12	12	12	1/2"		GARAGE RECEPTACLES	14
15	RECEPS – TTB		12	12	12	1/2"	20/1	0.36	B	1.00	20/1	12	12	12	1/2"		GARAGE RECEPTACLES	16
17	FACP		12	12	12	1/2"	20/1	0.50	C	1.00	20/1	12	12	12	1/2"		ELEVATOR PIT LIGHTS/RECEPTACLES	18
19	LIGHTING – EXTERIOR		10	10	10	1/2"	20/1	0.16	A	1.00	20/1	12	12	12	1/2"		SUMP PUMP	20
21	LIGHTING – GARAGES		10	10	10	1/2"	20/1	0.20	B	4.80	60/3	4	4	10	1.25"		ELEVATOR CONTROLLER	22
23	LIGHTING – STAIRS		10	10	10	1/2"	20/1	0.42	C	4.80	–	4	–	–	–		–	24
25	LIGHTING – STAIRS		10	10	10	1/2"	20/1	0.42	A	4.80	–	4	–	–	–		–	26
27	LIGHTING – FIRST FLOOR CORRIDOR		10	10	10	1/2"	20/1	0.80	B	1.00	20/1	12	12	12	1/2"		ELEVATOR CAB LIGHTS	28
29	LIGHTING – SECOND FLOOR CORRIDOR		10	10	10	1/2"	20/1	0.39	C	–	20/1	–	–	–	–		SPARE	30
31	LIGHTING – THIRD FLOOR CORRIDOR		10	10	10	1/2"	20/1	0.39	A	–	20/1	–	–	–	–		SPARE	32
33	LIGHTING – FOURTH FLOOR CORRIDOR		10	10	10	1/2"	20/1	0.39	B	–	20/1	–	–	–	–		SPARE	34
35	RECEPS – ROOF TOP		10	10	10	1/2"	20/1	0.72	C	–	20/1	–	–	–	–		SPARE	36
37	SPARE		–	–	–	–	20/1	–	A	–	20/1	–	–	–	–		SPARE	38
39	SPARE		–	–	–	–	20/1	–	B	–	20/1	–	–	–	–		SPARE	40
41	SPARE		–	–	–	–	20/1	–	C	–	20/1	–	–	–	–		SPARE	42

EQUIPMENT SERVED	CONN. LOAD	L.F.	D.F.	DEMAND LOAD	
LIGHTING	3.17 KVA		125%	3.96 KVA	
RECEPTACLES – GENERAL	5.22 KVA		100%	5.22 KVA	
EQUIPMENT	25.90 KVA		100%	25.90 KVA	
SECOND SECTION	33.06 KVA		100%	33.06 KVA	

NOTES:

TOTAL DEMAND LOAD: 68.14 KVA
TOTAL DEMAND AMPS: 189.28 AMPS

PANEL H1 (SECTION 2)

LOCATION: BUILDING TYPE I | VOLTAGE: 208Y/120V 3ø 4W | MIN. AIC RATING: 22K AIC | NOTES: PROVIDE TYPED WRITTEN DIRECTORY PROVIDE GROUND & NEUTRAL BUS
TYPE: SQUARE-D | MAINS: 300A ☒ MLO ☐ MCB | MOUNTING: SURFACE
FED FROM: METER CENTER #1B | LUGS: ☐ SUB-FEED ☐ FEED-THRU | ENCLOSURE: NEMA 1

CKT	CIRCUIT DESCRIPTION	NOTES	BRANCH CIRCUIT ø	NEUT	GND	COND	BKR	LOAD KVA	PHASE ø	LOAD KVA	BKR	BRANCH CIRCUIT ø	NEUT	GND	COND	NOTES	CIRCUIT DESCRIPTION	CKT
43	AHU 1.1		10	10	10	1/2"	30/2	2.25	A	1.16	20/2	10	10	10	1/2"		MCU–1	44
45	–		10	–	–	–	–	2.25	B	1.16	–	10	–	–	–		–	46
47	AHU 1.2		10	10	10	1/2"	30/2	2.25	C	1.16	20/2	10	10	10	1/2"		MCU–1	48
49	–		10	–	–	–	–	2.25	A	1.16	–	10	–	–	–		–	50
51	AHU 1.3		10	10	10	1/2"	30/2	2.25	B	1.42	25/2	10	10	10	1/2"		CU–1.1	52
53	–		10	–	–	–	–	2.25	C	1.42	–	10	–	–	–		–	54
55	AHU 1.4		10	10	10	1/2"	30/2	2.25	A	1.18	25/2	10	10	10	1/2"		CU 1.2	56
57	–		10	–	–	–	–	2.25	B	1.18	–	10	–	–	–		–	58
59	FIRE SMOKE DAMPERS		10	10	10	1/2"	20/1	0.50	C	1.18	25/2	10	10	10	1/2"		CU 1.3	60
61	SPACE ONLY		–	–	–	–	–	–	A	1.18	–	10	–	–	–		–	62
63	SPACE ONLY		–	–	–	–	–	–	B	1.18	25/2	10	10	10	1/2"		CU 1.4	64
65	SPACE ONLY		–	–	–	–	–	–	C	1.18	–	10	–	–	–		–	66
67	SPACE ONLY		–	–	–	–	–	–	A	–	–	–	–	–	–		SPACE ONLY	68
69	SPACE ONLY		–	–	–	–	–	–	B	–	–	–	–	–	–		SPACE ONLY	70
71	SPACE ONLY		–	–	–	–	–	–	C	–	–	–	–	–	–		SPACE ONLY	72
73	SPACE ONLY		–	–	–	–	–	–	A	–	–	–	–	–	–		SPACE ONLY	74
75	SPACE ONLY		–	–	–	–	–	–	B	–	–	–	–	–	–		SPACE ONLY	76
77	SPACE ONLY		–	–	–	–	–	–	C	–	–	–	–	–	–		SPACE ONLY	78
79	SPACE ONLY		–	–	–	–	–	–	A	–	–	–	–	–	–		SPACE ONLY	80
81	SPACE ONLY		–	–	–	–	–	–	B	–	–	–	–	–	–		SPACE ONLY	82
83	SPACE ONLY		–	–	–	–	–	–	C	–	–	–	–	–	–		SPACE ONLY	84

EQUIPMENT SERVED	CONN. LOAD	L.F.	D.F.	DEMAND LOAD	
EQUIPMENT	33.06 KVA		100%	33.06 KVA	

NOTES:

TOTAL DEMAND LOAD: 33.06 KVA
LOAD CARRIED OVER TO FIRST SECTION

PANEL H2 (SECTION 1)

LOCATION: BUILDING TYPE II | VOLTAGE: 208Y/120V 3ø 4W | MIN. AIC RATING: 22K AIC | NOTES: PROVIDE TYPED WRITTEN DIRECTORY PROVIDE GROUND & NEUTRAL BUS
TYPE: SQUARE-D | MAINS: 300A ☒ MLO ☐ MCB | MOUNTING: SURFACE
FED FROM: METER CENTER #2B | LUGS: ☐ SUB-FEED ☐ FEED-THRU | ENCLOSURE: NEMA 1

CKT	CIRCUIT DESCRIPTION	NOTES	BRANCH CIRCUIT ø	NEUT	GND	COND	BKR	LOAD KVA	PHASE ø	LOAD KVA	BKR	BRANCH CIRCUIT ø	NEUT	GND	COND	NOTES	CIRCUIT DESCRIPTION	CKT
1	RECEPS – CORRIDOR		10	10	10	1/2"	20/1	0.72	A	1.00	20/1	12	12	12	1/2"		GARAGE RECEPTACLES	2
3	RECEPS – CORRIDOR		10	10	10	1/2"	20/1	0.72	B	1.00	20/1	12	12	12	1/2"		GARAGE RECEPTACLES	4
5	RECEPS – CORRIDOR		10	10	10	1/2"	20/1	0.72	C	1.00	20/1	12	12	12	1/2"		GARAGE RECEPTACLES	6
7	RECEPS – CORRIDOR		10	10	10	1/2"	20/1	0.72	A	1.00	20/1	12	12	12	1/2"		GARAGE RECEPTACLES	8
9	RECEPS – CORRIDOR		10	10	10	1/2"	20/1	0.72	B	1.00	20/1	12	12	12	1/2"		GARAGE RECEPTACLES	10
11	RECEPS – CORRIDOR		10	10	10	1/2"	20/1	0.18	C	1.00	20/1	12	12	12	1/2"		GARAGE RECEPTACLES	12
13	RECEPS – TTB		12	12	12	1/2"	20/1	0.36	A	1.00	20/1	12	12	12	1/2"		GARAGE RECEPTACLES	14
15	RECEPS – TTB		12	12	12	1/2"	20/1	0.36	B	1.00	20/1	12	12	12	1/2"		GARAGE RECEPTACLES	16
17	FACP		12	12	12	1/2"	20/1	0.50	C	1.00	20/1	12	12	12	1/2"		ELEVATOR PIT LIGHTS/RECEPTACLES	18
19	LIGHTING – EXTERIOR		10	10	10	1/2"	20/1	0.16	A	1.00	20/1	12	12	12	1/2"		SUMP PUMP	20
21	LIGHTING – GARAGES		10	10	10	1/2"	20/1	0.20	B	4.80	60/3	4	4	10	1.25"		ELEVATOR CONTROLLER	22
23	LIGHTING – STAIRS		10	10	10	1/2"	20/1	0.42	C	4.80	–	4	–	–	–		–	24
25	LIGHTING – STAIRS		10	10	10	1/2"	20/1	0.42	A	4.80	–	4	–	–	–		–	26
27	LIGHTING – FIRST FLOOR CORRIDOR		10	10	10	1/2"	20/1	0.68	B	1.00	20/1	12	12	12	1/2"		ELEVATOR CAB LIGHTS	28
29	LIGHTING – SECOND FLOOR CORRIDOR		10	10	10	1/2"	20/1	0.30	C	–	20/1	–	–	–	–		SPARE	30
31	LIGHTING – THIRD FLOOR CORRIDOR		10	10	10	1/2"	20/1	0.30	A	–	20/1	–	–	–	–		SPARE	32
33	LIGHTING – FOURTH FLOOR CORRIDOR		10	10	10	1/2"	20/1	0.30	B	–	20/1	–	–	–	–		SPARE	34
35	RECEPS – ROOF TOP		10	10	10	1/2"	20/1	0.72	C	–	20/1	–	–	–	–		SPARE	36
37	SPARE		–	–	–	–	20/1	–	A	–	20/1	–	–	–	–		SPARE	38
39	SPARE		–	–	–	–	20/1	–	B	–	20/1	–	–	–	–		SPARE	40
41	SPARE		–	–	–	–	20/1	–	C	–	20/1	–	–	–	–		SPARE	42

EQUIPMENT SERVED	CONN. LOAD	L.F.	D.F.	DEMAND LOAD	
LIGHTING	2.78 KVA		125%	3.48 KVA	
RECEPTACLES – GENERAL	5.22 KVA		100%	5.22 KVA	
EQUIPMENT	25.90 KVA		100%	25.90 KVA	
SECOND SECTION	35.96 KVA		100%	35.96 KVA	

NOTES:

TOTAL DEMAND LOAD: 70.56 KVA
TOTAL DEMAND AMPS: 196.00 AMPS

PANEL H2 (SECTION 2)

LOCATION: BUILDING TYPE II | VOLTAGE: 208Y/120V 3ø 4W | MIN. AIC RATING: 22K AIC | NOTES: PROVIDE TYPED WRITTEN DIRECTORY PROVIDE GROUND & NEUTRAL BUS
TYPE: SQUARE-D | MAINS: 300A ☒ MLO ☐ MCB | MOUNTING: SURFACE
FED FROM: METER CENTER #2B | LUGS: ☐ SUB-FEED ☐ FEED-THRU | ENCLOSURE: NEMA 1

CKT	CIRCUIT DESCRIPTION	NOTES	BRANCH CIRCUIT ø	NEUT	GND	COND	BKR	LOAD KVA	PHASE ø	LOAD KVA	BKR	BRANCH CIRCUIT ø	NEUT	GND	COND	NOTES	CIRCUIT DESCRIPTION	CKT
43	AHU 2.1		10	10	10	1/2"	30/2	2.25	A	1.16	20/2	10	10	10	1/2"		MCU–1	44
45	–		10	–	–	–	–	2.25	B	1.16	–	10	–	–	–		–	46
47	AHU 2.2		10	10	10	1/2"	30/2	2.25	C	1.16	20/2	10	10	10	1/2"		MCU–1	48
49	–		10	–	–	–	–	2.25	A	1.16	–	10	–	–	–		–	50
51	AHU 2.3		10	10	10	1/2"	30/2	2.25	B	1.42	25/2	10	10	10	1/2"		CU–2.1	52
53	–		10	–	–	–	–	2.25	C	1.42	–	10	–	–	–		–	54
55	AHU 2.4		10	10	10	1/2"	30/2	2.25	A	1.18	25/2	10	10	10	1/2"		CU 2.2	56
57	–		10	–	–	–	–	2.25	B	1.18	–	10	–	–	–		–	58
59	FIRE SMOKE DAMPERS		10	10	10	1/2"	20/1	0.50	C	1.18	25/2	10	10	10	1/2"		CU 2.3	60
61	SITE GATE MOTOR	1	10	10	10	3/4"	20/1	1.20	A	1.18	–	10	–	–	–		–	62
63	SITE GATE MOTOR	1	10	10	10	3/4"	20/1	1.20	B	1.18	25/2	10	10	10	1/2"		CU 2.4	64
65	SITE GATE SENSOR	1	10	10	10	3/4"	20/1	0.50	C	1.18	–	10	–	–	–		–	66
67	SPACE ONLY		–	–	–	–	–	–	A	–	–	–	–	–	–		SPACE ONLY	68
69	SPACE ONLY		–	–	–	–	–	–	B	–	–	–	–	–	–		SPACE ONLY	70
71	SPACE ONLY		–	–	–	–	–	–	C	–	–	–	–	–	–		SPACE ONLY	72
73	SPACE ONLY		–	–	–	–	–	–	A	–	–	–	–	–	–		SPACE ONLY	74
75	SPACE ONLY		–	–	–	–	–	–	B	–	–	–	–	–	–		SPACE ONLY	76
77	SPACE ONLY		–	–	–	–	–	–	C	–	–	–	–	–	–		SPACE ONLY	78
79	SPACE ONLY		–	–	–	–	–	–	A	–	–	–	–	–	–		SPACE ONLY	80
81	SPACE ONLY		–	–	–	–	–	–	B	–	–	–	–	–	–		SPACE ONLY	82
83	SPACE ONLY		–	–	–	–	–	–	C	–	–	–	–	–	–		SPACE ONLY	84

EQUIPMENT SERVED	CONN. LOAD	L.F.	D.F.	DEMAND LOAD	
EQUIPMENT	35.96 KVA		100%	35.96 KVA	

NOTES:
1) CIRCUIT APPLIES TO BUILDING #1 ONLY

TOTAL DEMAND LOAD: 35.96 KVA
LOAD CARRIED OVER TO FIRST SECTION

LIGHTING FIXTURE SCHEDULE

MARK	DESCRIPTION	MANUFACTURER	MODEL	VOLTS	LAMP QTY	LAMP WATTS	LAMP MODEL	FIXTURE WATTS
BA	SURFACE MOUNTED LED LOCATED AT MAIN CORRIDORS.	TBD	TBD	120	1	17	LED	17
BB	DECORATIVE EXTERIOR WALL SCONCE LOCATED AT BUILDING ENTRANCES. UL WET LABEL RATED.	TBD	TBD	120	1	15	LED	15
BC	SURFACE MOUNTED LED LOCATED AT STORAGE CLOSESTS.	TBD	TBD	120	1	17	LED	17
BD	WELL MOUNTED LED STAIRWELL WITH INTEGRATED MOTION SENSOR AND BI–LEVEL BALLAST	PHILIPS	SF–4–C–38A–40–U–DZT–US–EMLED	120	1	53	LED	53
BF	4' SURFACE MOUNTED HIGH OUTPUT LED WRAP WITH EMERGENCY BATTERY BACKUP.	PRUDENTIAL LIGHTING	S1–LED35–HO–4–WA–YGW–UNV–SUR–ND–EMH	120	1	44	LED	44
BG	4' LED WRAPAROUND FIXTURE LOCATED AT GARAGES, MECHANICAL ROOMS, AND ELECTRICAL ROOMS.	COLUMBIA	LAW–4–30–LW–E–U	120	1	25	LED	25
EM	WALL MOUNTED EMERGENCY LIGHT WITH THERMOPLASTIC HOUSING, TWIN HEADS AND BATTERY BACKUP	DUAL LITE	EV4–02L	120	2	2	LED	4
EM2	WALL MOUNTED EMERGENCY LIGHT WITH THERMOPLASTIC HOUSING, TWIN HEADS AND BATTERY BACKUP, WET LOCATION.	DUAL LITE	EV4–02L	120	2	2	LED	4
X1	SINGLE FACE EXIT SIGN WITH WHITE THERMOPLASTIC HOUSING, RED LETTERS AND BATTERY BACKUP	DUAL LITE	EVE–U–R–W–E	120	–	–	LED	–
X2	DOUBLE FACE EXIT SIGN WITH WHITE THERMOPLASTIC HOUSING, RED LETTERS AND BATTERY BACKUP	DUAL LITE	EVE–U–R–W–E	120	–	–	LED	–

PERMIT REVIEW STAMP

ISSUE HISTORY

No.	Date	Description
1	10/06/2017	COORDINATION SET
2	11/10/2017	75%-90% REVIEW COORD. SET

REVISION HISTORY

No.	Date	Description

© 2015 These drawings and their contents are the property of FUGLEBERG KOCH, P.L.C. 14000010 and are issued only for the specific project noted on these drawings. Any reproductions, revisions, or modifications of these documents without the expressed written consent of Fugleberg Koch, P.L.C. is prohibited by law.

FUGLEBERG KOCH
2555 Temple Trail, Winter Park, FL 32789 (407) 629-0595
www.fuglebergkoch.com BR569

CONSULTANT

Joseph, Lawrence & Co
Consulting Engineers
1180 HARWOOD AVE. SUITE 3000
ALTAMONTE SPRINGS, FLORIDA 32714
TEL: 321.972.4466
WWW.JLCENG.COM
CA NO. 28730

JLC 17.0137.00

Blake Lawrence Suddeth
P.E. #: 69060

SUMMER BAY APTS. II
LAKE COUNTY, FL

Drawn:	MJR/KCM
Checked:	BLS/AJB
Approval:	BLS/AJB
Date:	11/10/2017
Project #:	5389

SCHEDULES - ELECTRICAL

E6.03

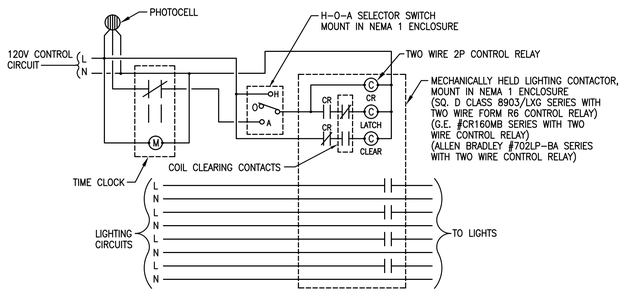

NOTE:
PROVIDE, INSTALL & CONNECT ADDITIONAL CONTACTS AND/OR CONTACTORS COMPLETE WITH ENCLOSURES AS REQUIRED PER APPLICATION, SEE ELECTRICAL DRAWINGS TO DETERMINE EXACT NUMBER OF POLES. SEE ELECTRICAL DRAWINGS FOR ACTUAL CIRCUIT NUMBERS. PROVIDE MINIMUM OF (2) ADDITIONAL/SPARE CONTACTS.

6 CONTACTOR 'LC1' SCHEMATIC – PHOTOCELL & TIMECLOCK CONTROLLED

SCALE: NTS

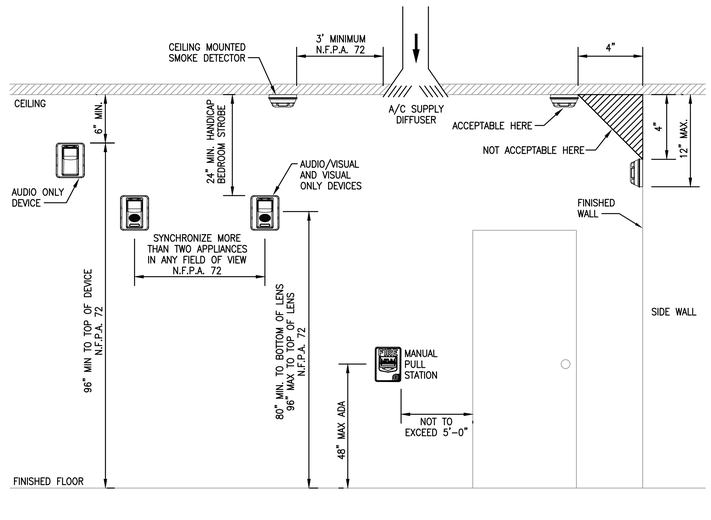

5 FIRE ALARM MOUNTING HEIGHT DETAIL

SCALE: NTS

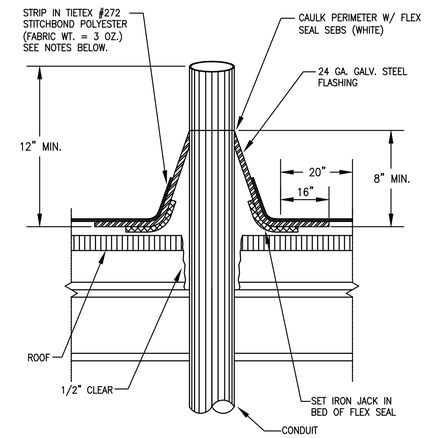

NOTES:
1. ALL SURFACES TO BE CLEAN (FREE OF DIRT, GREASE, SCALE, PAINT, ETC.)
2. WIRE BRUSH ALL LOOSE MATERIAL AS REQUIRED.
3. PRIME EXISTING ROOF AND FLASHING W/ SB ELASTOMERIC PRIMER.
4. 5 COURSE: 2 PLYS TIETEX W/ SB ELASTOMERIC GEL (FEATHER SECOND PLY) AT MIN. 40 MIL UNCURED PER COURSE.
5. TOP COAT W/ K-2 EXTREME DUTY ELASTOMER (MATCH ROOF COLOR)
6. DETAIL SHOW FOR WEATHERPROOFING PENETRATION ONLY. CONTRACTOR SHALL PROVIDE FIRESTOPPING AS REQUIRED TO MAINTAIN FIRE RATING OF ROOF.

4 ROOF PENETRATION WEATHERPROOF DETAIL

SCALE: NTS

Product Information HILTI

Firestop Putty Pad (CP 617, CP 617L and CP 617XL)

Product description
- A moldable firestop putty designed to help protect electrical outlet boxes

Product features
- Applied by hand
- Fast installation

Areas of application
- Protection of electrical outlet boxes

For use with
- Gypsum wall assemblies with wood or metal studs

Examples
- Where two outlets are within a single stud/cavity or within 24" measured horizontally (not back to back unless specified by the specific UL approval)

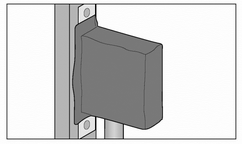

Technical Data*	CP 617
Dimensions (LxWxH)	CP 617: 6" x 7" x 1,8" (15 x 18 x 0.3 cm) CP 617L: 7" x 7" x 1,8" (18 x 18 x 0.3 cm) CP 617XL: 9" x 9" x 1,8" (23 x 23 x 0.3 cm)
Consistency	Moldable putty
Color	Red
Application temperature	40°F (5°C) to 95°F (35°C)
Storage temperature	40°F (5°C) to 104°F (40°C)
Curing time	Non-curing
Density	1.48 g/cm³
Intumescent activation	Approx. 220°F to 250°F (104°C to 121°C)
Volatile solvents	None
Asbestos fibers	None
Surface burning characteristics (ASTM E 84-06)	Flame Spread: 15 Smoke development: 10
Sound transmission classification (ASTM E 90-07)	59 (Relates to specific construction)
Tested in accordance with • UL 263 • ASTM E 84 • ASTM G21	

*At 73°F (23°C) and 50% relative humidity

WALL OPENING PROTECTIVE MATERIAL
FIRE RESISTANCE CLASSIFICATION
SEE CURRENT ISSUE OF UL FIRE RESISTANCE DIRECTORY
6917

Installation instructions for CP 617

Notice
- Before handling, read Material Safety Data Sheet and product label for safe usage and health information.
- Instructions below are general guidelines — always refer to the applicable listing (CLIV) in the UL Fire Resistance Directory or Hilti Firestop Systems Guide for complete installation information

Application of firestop putty
1. After ensuring box is cleared of loose debris, dirt, oil, moisture, frost and wax, remove label from one side of pad. For a 1 to 2 hour fire rating, one CP 617 pad is required. Exposed side of pad is placed against box.
2. CP 617 Firestop Putty Pads are to be installed to completely cover the exterior surfaces of the outlet box (except for the side of the outlet box against the stud) and completely seal against the stud within the stud cavity.
3. Reshape CP 617 to fit around conduit or cables.
4. Press CP 617 to all sides of electrical box.
5. Remove other side of label.

Not for use
- In areas exposed to water

Storage
- Store only in the original packaging in a location at temperatures 40°F (5°C) to 104°F (40°C)

Hilti Firestop
Saving lives through innovation and education

Hilti. Outperform. Outlast.

Hilti, Inc. (U.S.) 1-800-879-8000 • www.us.hilti.com • en español 1-800-879-5000 • Hilti Firestop Systems Guide

3 OUTLET BOX MOUNTED IN FIRE RATED WALL

SCALE: NTS

UL/cUL SYSTEM NO. W-J-1020

METAL PIPE THROUGH CONCRETE WALL OR BLOCK WALL

F-RATING = 2-HR.
T-RATING = 0-HR. OR 1/4-HR.
L-RATING AT AMBIENT = LESS THAN 1 CFM/SQ. FT.
L-RATING AT 400°F = 4 CFM/SQ. FT.

WJ1020e.091699

FRONT VIEW

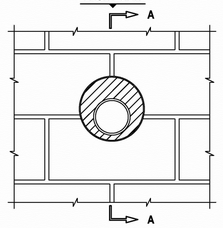

SECTION A-A

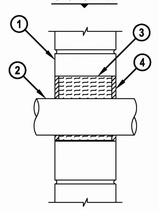

1. CONCRETE WALL ASSEMBLY (2-HR. FIRE-RATING):
   A. LIGHTWEIGHT OR NORMAL WEIGHT CONCRETE WALL (MIN. 5" THICK).
   B. ANY UL/ULC CLASSIFIED CONCRETE BLOCK WALL.
2. PENETRATING ITEM TO BE ONE OF THE FOLLOWING:
   A. MAXIMUM 4" NOMINAL DIAMETER COPPER PIPE.
   B. MAXIMUM 4" NOMINAL DIAMETER STEEL CONDUIT.
   C. MAXIMUM 4" NOMINAL DIAMETER EMT.
3. MINERAL WOOL (MIN. 4 PCF DENSITY), BACKER ROD, OR HILTI CF 128 FILLER FOAM TO BE USED AS A BACKER.
4. HILTI FS-ONE INTUMESCENT FIRESTOP SEALANT:
   A. MINIMUM 1/4" DEPTH WHEN EMT OR STEEL CONDUIT IS THE PENETRATING ITEM.
   B. MINIMUM 1/2" DEPTH WHEN COPPER PIPE IS THE PENETRATING ITEM.

NOTES : 1. MAXIMUM DIAMETER OF OPENING = 8".
2. ANNULAR SPACE = MINIMUM 3/4", MAXIMUM 3-1/2".
3. FOR HOLLOW BLOCK WALLS, USE NO. 8 STEEL WIRE MESH TO AID IN THE INSTALLATION.

HILTI® FIRESTOP SYSTEMS

HILTI, Inc.
Tulsa, Oklahoma USA (918) 252-6000

Sheet	1 of 1
Scale	1/8" = 1"
Date	SEPT. 16, 1999

Drawing No. WJ 1020e

Saving Lives through Innovation and Education

2 UL FIRE RATED DETAIL (W-J-1020)

SCALE: NTS

UL/cUL SYSTEM NO. W-L-1175

METAL PIPE THROUGH GYPSUM WALL ASSEMBLY

F-RATING = 1-HR. OR 2-HR.
T-RATING = 0-HR.
L-RATING AT AMBIENT = 1 CFM/SQ. FT.
L-RATING AT 400°F = 1 CFM/SQ. FT.

WL1175b.032206

FRONT VIEW

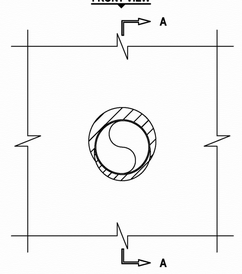

SECTION A-A

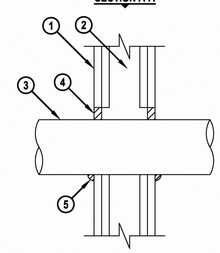

1. GYPSUM WALL ASSEMBLY (UL/cUL CLASSIFIED U300 OR U400 SERIES) (1-HR. OR 2-HR. FIRE-RATING) (2-HR. SHOWN).
2. [NOT SHOWN] WOOD STUDS TO CONSIST OF NOMINAL 2" x 4" LUMBER. STEEL STUDS TO BE MINIMUM 2-1/2" WIDE.
3. PENETRATING ITEM TO BE ONE OF THE FOLLOWING :
   A. MAXIMUM 4" NOMINAL DIAMETER EMT.
   B. MAXIMUM 4" NOMINAL DIAMETER STEEL CONDUIT.
4. MINIMUM 5/8" DEPTH HILTI CP 618 FIRESTOP PUTTY STICK.
5. MINIMUM 1/4" CROWN HILTI CP 618 FIRESTOP PUTTY STICK AT POINT OF CONTACT.

NOTES : 1. MAXIMUM DIAMETER OF OPENING = 5-1/2".
2. ANNULAR SPACE = MINIMUM 0", MAXIMUM 1".

Hilti Firestop Systems

HILTI, Inc.
Tulsa, Oklahoma USA (918) 252-6000

Sheet	1 of 1
Scale	3/16" = 1"
Date	Mar. 22, 2006

Drawing No. WL 1175b

Saving Lives through Innovation and Education

1 UL FIRE RATED DETAIL (W-L-1175)

SCALE: NTS

PERMIT REVIEW STAMP

ISSUE HISTORY

No.	Date	Description
1	10/06/2017	COORDINATION SET
2	11/10/2017	75%-90% REVIEW COORD. SET

REVISION HISTORY

No.	Date	Description

© 2015 These documents and their contents are the property of FUGLEBERG KOCH, P.L.C. 4400001320 and are issued only for the specific project named on these drawings. Any reproductions, revisions, or modifications of these documents without the expressed written consent of Fugleberg Koch, P.L.C. is prohibited by law.

FUGLEBERG KOCH
2555 Temple Trail, Winter Park, FL 32789 (407) 629-0595
www.fuglebergkoch.com BR569
CONSULTANT

Joseph, Lawrence & Co Consulting Engineers
1180 HADWOOD AVE. SUITE 3000
ALTAMONTE SPRINGS, FLORIDA 32714
TEL: 321.972.4466
WWW.JLCENG.COM
CA NO. 28730

JLC 17.0137.00

Blake Lawrence Suddeth
P.E. #: 69060

SUMMER BAY APTS. II
LAKE COUNTY, FL

Drawn:	MJR/KCM
Checked:	BLS/AJB
Approval:	BLS/AJB
Date:	11/10/2017
Project #:	5389

DETAILS - ELECTRICAL

E6.04

F.A.C. 61G15-32.008 DESIGN OF FIRE ALARMS & DETECTION SYSTEMS

61G15-32.008 DESIGN OF FIRE ALARM AND DETECTION SYSTEM COMPLIANCE NOTES FOR APARTMENTS AND CLUBHOUSE:

APPLICABLE CODES: FBC FLORIDA BUILDING CODE (2014) 5TH EDITION
FFPC FLORIDA FIRE PREVENTION CODE (2014) 5TH EDITION
- NFPA 1 FIRE CODE (2012) FLORIDA EDITION
- NFPA 101 LIFE SAFETY CODE (2012) FLORIDA EDITION

NFPA 70 NATIONAL ELECTRIC CODE (2011)
NFPA 72 NATIONAL FIRE ALARM & SIGNALING CODE (2010)
AHJ – LAKE COUNTY, FLORIDA – LOCAL CODES & AMENDMENTS

A. DESIGN INTENT

1. SYSTEM TYPE: MASTER FIRE ALARM CONTROL PANEL LOCATED IN CLUBHOUSE SHALL BE AN ADDRESSABLE PANEL BY EDWARDS, HONEYWELL, NOTIFIER, SILENT KNIGHT, OR APPROVED EQUIVALENT. SUB-PANEL FACP'S IN EACH APARTMENT BUILDING SHALL BE ADDRESSABLE TYPES.
2. SEE SYMBOL LEGEND ON THIS SHEET.
3. SEE FIRE ALARM RISER DIAGRAM THIS SHEET.
4. CABLING REQUIREMENTS:
   a. WIRING METHOD: THE SYSTEM WILL BE FREE WIRED USING APPROPRIATE STRAPS, TIES, FITTINGS, ETC. TO PREVENT DAMAGE TO THE WIRING.
   b. INITIATION CIRCUITS (LOOP): INITIATION LOOP CONDUCTORS SHALL BE WEST PENN #D991 FOR 3000'0" IN LENGTH AND LESS. WEST PENN #D995 SHALL BE USED FOR CIRCUITS OVER 3000'0" IN LENGTH. BELOW GRADE, WET OR DAMP LOCATION INSTALLED CABLE, INCLUDING CABLE INSTALLED ON THE TOP OF EXTERIOR WALKWAYS, SHALL BE WEST PENN AQUASEAL MULTI-CONDUCTOR (14 GAUGE), UNLESS NOTED OTHERWISE, SHALL BE INSTALLED IN CONDUIT.
   c. SIGNAL CIRCUITS: SIGNAL CIRCUITS SHALL BE #14 AWG THWN 19 STRAND COPPER (USE #12 AWG IF VOLTAGE DROP EXCEEDS MANUFACTURER'S SPECIFICATIONS).
   d. ANNUNCIATOR CIRCUITS: #14 AWG THWN 19 STRAND COPPER (USE #12 AWG IF VOLTAGE DROP EXCEEDS MANUFACTURER'S SPECIFICATIONS).
   e. EACH AND EVERY WIRE SHALL BE LABELED AT EACH END WITH SLC #, CHANNEL # OR SIGNAL #. EACH SEPARATE CIRCUIT, INITIATION, SIGNAL AND AUXILIARY SHALL HAVE A SPECIFIC NUMBER. LABEL EACH CONDUCTOR BY THIS CIRCUIT NUMBER AT THE CONTROL CONNECTIONS AND AT EACH TERMINAL CONNECTION IN THE TERMINAL CABINETS.
5. FIRE RATINGS REQUIRED FOR SURVIVABILITY: UNLESS NOTED OTHERWISE, PATHWAY SURVIVABILITY SHALL BE LEVEL 0 OR 1.

B. DEVICE LOCATIONS AND RELATED SYSTEMS

1. ALL INITIATION AND NOTIFICATION DEVICES ARE SHOWN ON ELECTRICAL POWER AND SYSTEMS PLANS WITHIN THIS ELECTRICAL DRAWING SET.
2. CONNECTIONS TO OTHER SYSTEMS: PROVIDE RELAYS FOR OTHER LOCAL CONTROL SUCH AS HVAC SHUTDOWN AND FIRE/SMOKE DAMPER RELEASE. RELAYS SHALL BE 10 AMP RATED RELAYS. UPON ACTIVATION OF THE FIRE ALARM SYSTEM, THE RELAY SHALL ACTIVATE AND SHUTDOWN THE CONTROLLED EQUIPMENT. LOCATE ALL RELAYS WITHIN 36" OF EQUIPMENT CONTROLLED. PROVIDE WEATHERPROOF UNITS WHERE INDICATED OR INSTALL IN WEATHERPROOF BOXES.

C. STROBE INTENSITY AND SPEAKER OUTPUT RATINGS

1. PER NFPA 72 SECTION 18.4.3 AUDIBLE SIGNALS SHALL BE AT LEAST 15dB ABOVE AVERAGE AMBIENT SOUND LEVEL OR 5dB ABOVE MAXIMUM SOUND LEVEL, WHICHEVER IS GREATER.
2. ALL VISUAL NOTIFICATION DEVICES SHALL HAVE A MINIMUM 75CD CANDELA RATING PER FBC.
3. AUDIBLE APPLIANCES FOR SLEEPING AREAS SHALL PRODUCE A LOW FREQUENCY ALARM SIGNAL THAT COMPLIES WITH NFPA SECTION 18.4.5.3.

D. CIRCUIT CLASSES

INITIATING DEVICE CIRCUITS – CLASS B. SIGNALING LINE CIRCUITS – CLASS B. NOTIFICATION APPLIANCE CIRCUIT – CLASS B.

E. FUNCTIONS

SEE SEQUENCE OF OPERATIONS THIS SHEET.

F. FIRE ALARM TYPE AND ZONING

1. FIRE ALARM SYSTEM IS AN ADDRESSABLE TYPE. SUB-PANELS ARE ADDRESSABLE TYPE.
2. INITIATING DEVICES SHALL BE ZONED BY BUILDING.
3. EVACUATION SIGNALS SHALL BE ZONED BY BUILDING.

G. SURGE PROTECTION

DITEK SURGE PROTECTION DEVICES DEVICES SHALL BE PROVIDED AT EACH CONNECTION TO MAIN POWER AND WHERE A CIRCUIT ENTERS/EXITS THE BUILDING. ALL SURGE/TRANSIENT SUPPRESSORS MUST BE CONNECTED TO APPROVED BUILDING GROUND.

H. ENVIRONMENTAL FACTORS

NO SPECIAL ENVIRONMENTAL FACTORS APPLY. FIRE ALARM DEVICES AND EQUIPMENT TO BE INSTALLED OUTDOORS IN EXTERIOR LOCATIONS SHALL BE SPECIFICALLY DESIGNED AND U.L. LISTED AS WEATHER AND WATERPROOF.

I. SITE PLAN

AN ELECTRICAL SITE PLAN HAS BEEN PROVIDED ON SHEET E1.01 INDICATING THE LOCATIONS OF MASTER FACP IN CLUBHOUSE AND SUB PANEL FACP'S IN APARTMENT BUILDINGS.

J. AREA SMOKE DETECTION

1. WHERE SMOKE DETECTORS ARE USED TO PROVIDE AREA COVERAGE, THEY SHALL BE LOCATED IN ACCORDANCE WITH NFPA 72 SECTION 17.7.3 "LOCATION AND SPACING" AND NFPA SECTION 29.8.3.4 "SPECIFIC LOCATION REQUIREMENTS" FOR THE APPLICABLE CONDITIONS.
2. SMOKE ALARMS AND SMOKE DETECTORS SHALL NOT BE LOCATED WHERE AMBIENT CONDITIONS, INCLUDING HUMIDITY AND TEMPERATURE, ARE OUTSIDE THE LIMITS SPECIFIED BY THE MANUFACTURER'S PUBLISHED INSTRUCTIONS.
3. SMOKE ALARMS AND SMOKE DETECTORS SHALL NOT BE LOCATED WITHIN UNFINISHED ATTICS OR GARAGES OR IN OTHER SPACES WHERE TEMPERATURES CAN FALL BELOW 40°F OR EXCEED 100°F.
4. SMOKE ALARMS AND SMOKE DETECTORS SHALL NOT BE INSTALLED WITHIN 10 FT FROM A STATIONARY OR FIXED COOKING APPLIANCE, UNLESS LISTED FOR INSTALLATION IN CLOSE PROXIMITY TO COOKING APPLIANCES OR MEETING THE ADDITIONAL CRITERIA LIST IN SECTION 29.8.3.4(4).
5. SMOKE ALARMS AND SMOKE DETECTORS SHALL NOT BE INSTALLED WITHIN 3 FT FROM THE FOLLOWING: A DOOR TO A BATHROOM CONTAINING A SHOWER OR TUB, SUPPLY AIR REGISTERS, AND/OR THE TIP OF THE BLADE OF A CEILING PADDLE FAN.

K. SMOKE STRATIFICATION

SMOKE STRATIFICATION IS NOT EXPECTED TO OCCUR IN THIS/THESE INTERIOR BUILDING(S).

L. PERFORMANCE BASED DESIGN (PBD)

THE DESIGN IS DERIVED FROM A PRESCRIPTIVE DESIGN BASIS.

M. EVACUATION SIGNAL

EVACUATION SIGNAL IS A GENERAL SIGNAL ☐ BY FLOOR ☒ BY BUILDING.

N. WIRING REQUIREMENTS

1. WIRING SHALL BE IN ACCORDANCE WITH NFPA 72 AND NFPA 70 ARTICLES 300, 760, 770, AND 800, AS APPLICABLE, UNLESS OTHERWISE NOTED.
2. PROTECTION AGAINST DAMAGE: INSTALL WIRING IN METAL RACEWAY. CONCEAL RACEWAY EXCEPT IN UNFINISHED SPACES AND AS INDICATED.
3. FIRE ALARM DEVICES AND EQUIPMENT TO BE INSTALLED OUTDOORS IN EXTERIOR LOCATIONS SHALL BE SPECIFICALLY DESIGNED AND U.L. LISTED AS WEATHER AND WATERPROOF. PROVIDE WEATHERPROOF NEOPRENE GASKETS BETWEEN WALL MOUNTING SURFACE AND FIRE ALARM DEVICE FOR ALL DEVICES MOUNTED OUTDOORS.

O. OPERATIONS AND MAINTENANCE PROCEDURES

1. PROVIDE THE SERVICES OF A FACTORY-AUTHORIZED SERVICE REPRESENTATIVE TO DEMONSTRATE THE SYSTEM AND TRAIN OWNER'S MAINTENANCE PERSONNEL AS SPECIFIED BELOW:
   a. TRAIN OWNER'S MAINTENANCE PERSONNEL IN THE LOCATION OF DEVICES, BOXES, PROCEDURES AND SCHEDULES INVOLVED IN OPERATING, TROUBLESHOOTING, SERVICING, AND PREVENTIVE MAINTAINING OF THE SYSTEM. PROVIDE A MINIMUM OF 4 HOURS' TRAINING. TRAINING SHALL INCLUDE A COMPLETE PROJECT WALKDOWN WITH OWNER'S AUTHORIZED REPRESENTATIVE TO IDENTIFY DEVICE LOCATIONS, JUNCTION BOX LOCATIONS AND SURGE SUPPRESSION MODULE LOCATIONS.
   b. SCHEDULE TRAINING WITH THE OWNER AT LEAST SEVEN WORKING DAYS IN ADVANCE.

(6) SYSTEM TEST AND DOCUMENTATION REQUIREMENTS

FIRE ALARM CONTRACTOR SHALL PERFORM THE TESTING LISTED BELOW AND PREPARE RECORDS PER NFPA 72 SECTION 14.6.

☒ INITIAL ACCEPTANCE TESTING IN ACCORDANCE WITH NFPA 72 SECTION 14.4.1 FOR ALL NEW APPLIANCE AND CIRCUITS.
☐ RE-ACCEPTANCE TESTING IN ACCORDANCE WITH NFPA 72 14.4.2 FOR MODIFICATIONS OF EXISTING CIRCUITS.

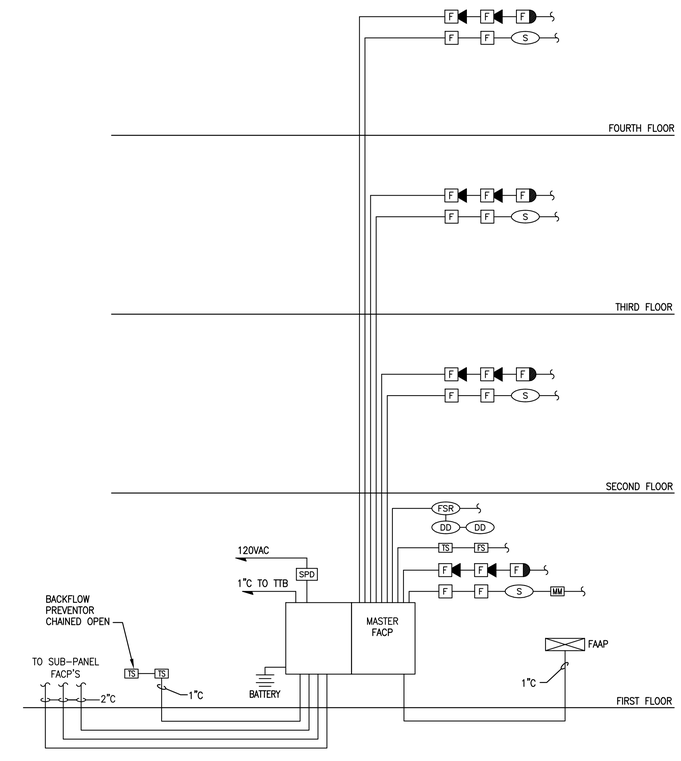

FIRE ALARM SYSTEM RISER DIAGRAM

NO SCALE

FIRE ALARM RISER - GENERAL NOTES:

A. FIRE ALARM SYSTEM RISER DIAGRAM IS DIAGRAMMATICAL. SEE FLOOR PLANS FOR EXACT QUANTITIES OF DEVICES. WIRING SHALL BE AS RECOMMENDED BY SYSTEMS MANUFACTURER.

B. DO NOT SCALE ELECTRICAL DRAWING FOR ANY DIMENSIONS.

C. ALL WORK SHALL COMPLY WITH THE 2011 NATIONAL ELECTRIC CODE, NATIONAL, STATE AND LOCAL CODES. PROVIDE GROUNDING AND BONDING PER NEC 250.

D. PROVIDE 120VAC SURGE SUPPRESSION AND LOW VOLTAGE FIRE ALARM CIRCUIT SURGE SUPPRESSION.

E. PROVIDE NOTIFICATION APPLIANCE CIRCUITS AND POWER SUPPLIES AS REQUIRED.

F. REFER TO POWER AND SYSTEMS FLOOR PLANS FOR FIRE ALARM EQUIPMENT COUNT.

G. PROVIDE 1" CONDUIT FROM FACP TO TTB.

H. ALL FIRE ALARM CIRCUITS SHALL BE IN CONDUIT WHERE REQUIRED BY CODE OR AHJ. PROVIDE ALL REQUIRED MONITORING AND CONTROL OF MECHANICAL UNITS AS REQUIRED BY AUTHORITY HAVING JURISDICTION.

I. VERIFY FIRE PROTECTION FLOW AND TAMPER SWITCH LOCATION WITH FIRE PROTECTION DRAWINGS. PROVIDE ALL REQUIRED MONITORING OF FIRE PROTECTION SYSTEM.

FIRE ALARM SYMBOL LEGEND

FACP	FIRE ALARM CONTROL PANEL	F M	FIRE ALARM MINI HORN
FAAP	FIRE ALARM ANNUNCIATOR PANEL	F M	FIRE ALARM MINI HORN & STROBE COMBINATION
F	FIRE ALARM PULL STATION	SPD	SURGE PROTECTOR DEVICE
F	FIRE ALARM HORN	S	SMOKE DETECTOR
F	FIRE ALARM HORN & STROBE COMBINATION	H	HEAT DETECTOR
F	FIRE ALARM HORN & STROBE COMBINATION (CEILING MTD)	DD	DUCT DETECTOR
F	FIRE ALARM STROBE	RTS	REMOTE TEST STATION FOR DUCT DETECTOR
		FSR	FIRE ALARM SHUT DOWN RELAY

FIRE ALARM SEQUENCE OF OPERATIONS

CATEGORIES	MANUAL PULL	AREA SMOKE/ HEAT DETECTORS	DUCT SMOKE DETECTORS	SPRINKLER VALVE FLOW SWITCH	SPRINKLER VALVE TAMPER SWITCH	BUILDING POWER FAILURE
ANNUNCIATION AT FIRE ALARM CONTROL PANEL (TROUBLE AND ALARM)	YES	YES	YES	YES	YES	YES
ANNUNCIATE AT REMOTE ANNUNCIATOR (TROUBLE AND ALARM)	YES	YES	YES	YES	YES	YES
ACTIVATE AUDIBLE AND VISUAL ALARM SIGNALS	YES	YES	YES	YES	NO	NO
SHUT DOWN AIR HANDLING UNIT(S) WITHIN THE ALARM ZONE	NO	NO	YES	NO	NO	NO
CLOSE ALL SMOKE/FIRE DAMPERS	NO	NO	YES	NO	NO	NO
RELEASE ALL MOTORIZED AND ELECRO-MAGNETICALLY HELD DOORS	YES	YES	YES	YES	NO	YES
RELEASE APPROVED SECURITY DOOR LOCKS	YES	YES	NO	YES	NO	YES

F.A.C. 61G15-32.008

THE CONTRACTOR'S FIRE ALARM ENGINEER, AS THE "DELEGATED ENGINEER" SHALL BE THE "ENGINEER OF RECORD" FOR THE FIRE ALARM SYSTEM AND SHALL PREPARE COMPLETE AND FINAL FIRE ALARM DESIGN DOCUMENTS WITH BATTERY CALCULATIONS, SIGNED AND SEALED, AS DEFINED BY THE F.A.C. 61G15-32.008 AND SHALL SUBMIT REQUIRED DOCUMENTATION TO THE ARCHITECT FOR REVIEW BY THEIR "PRIME PROFESSIONAL ENGINEER" CONSULTANT TO REVIEW FOR BASIC DESIGN CRITERIA. UPON APPROVAL THE CONTRACTOR SHALL SUBMIT SIGNED AND SEALED DOCUMENTS TO THE AHJ FOR REVIEW AND APPROVAL.

PERMIT REVIEW STAMP

ISSUE HISTORY

No.	Date	Description
1	10/06/2017	COORDINATION SET
2	11/10/2017	75%-90% REVIEW COORD. SET

REVISION HISTORY

No.	Date	Description

© 2015 - These drawings and their contents are the property of FUGLEBERG KOCH, P.L.C. +A0000103 and are issued only for the specific project noted on these drawings. Any reproductions, revisions, or modifications of these documents without the expressed written consent of Fugleberg Koch, P.L.C. is prohibited by law.

FUGLEBERG KOCH
2555 Temple Trail, Winter Park, FL 32789 (407) 629-0595
www.fuglebergkoch.com BR569

CONSULTANT
Joseph, Lawrence & Co
Consulting Engineers
1180 HARWOOD AVE. SUITE 3000
ALTAMONTE SPRINGS, FLORIDA 32714
TEL: 321.972.4466
WWW.JLCENG.COM
CA NO. 28730

JLC 17.0137.00

Blake Lawrence Suddeth
P.E. #: 69060

SUMMER BAY APTS. II
LAKE COUNTY, FL

Drawn:	MJR/KCM
Checked:	BLS/AJB
Approval:	BLS/AJB
Date:	11/10/2017
Project #:	5389

DETAILS - ELECTRICAL

E6.05

GENERAL NOTES:

A. DO NOT SCALE ELECTRICAL DRAWING FOR ANY DIMENSIONS.

B. ALL WORK SHALL COMPLY WITH THE 2011 NATIONAL ELECTRIC CODE, NATIONAL, STATE AND LOCAL CODES. PROVIDE GROUNDING AND BONDING PER NEC 250.

C. SEE SINGLE LINE DIAGRAM FOR FEEDER WIRE AND CONDUIT SIZE. ALL CIRCUITS NOT SIZED ON DRAWING SHALL BE INSTALLED TO MEET MINIMUM SIZE REQUIRED BY NEC. ALL CONDUCTORS SHALL HAVE AN EQUIPMENT GROUND WIRE SIZED PER NEC.

D. FIELD VERIFY EXACT LOCATION OF ALL DEVICES AND EQUIPMENT PRIOR TO ROUGH IN.

E. SOUND SYSTEM SPEAKERS TO BE TIED INTO FIRE ALARM SYSTEM SUCH THAT SPEAKERS AUTOMATICALLY TURN OFF WHEN FIRE ALARM SYSTEM IS TRIGGERED.

REFERENCE NOTES: (X)

(1) ELECTRICAL CONTRACTOR SHALL COORDINATE DISCONNECT AND FUSE REQUIREMENTS FOR MECHANICAL UNIT WITH MECHANICAL CONTRACTOR AND EQUIPMENT MANUFACTURER PRIOR TO ROUGH-IN AND PROVIDE AS REQUIRED. COORDINATE LOCATION OF DISCONNECT WITH OWNER AND MECHANICAL CONTRACTOR PRIOR TO ROUGH-IN. LOCATE AS REQUIRED TO MAINTAIN NEC CLEARANCES.

(2) CONNECT 120V FRACTIONAL HORSEPOWER EXHAUST FAN TO LOCAL LIGHTING CIRCUIT AND CONTROLS. FAN SHALL OPERATE SIMULTANEOUSLY WITH LIGHTS.

(3) PROVIDE 120V RECEPTACLE AND TELEVISION OUTLET FOR WALL MOUNTED TELEVISION. COORDINATE MOUNTING HEIGHT AND LOCATION WITH OWNER/EQUIPMENT INSTALLER PRIOR TO ROUGH-IN.

(4) COORDINATE DISCONNECT, METER, AND C.T. CABINET LOCATION WITH OWNER, CIVIL CONTRACTOR, AND UTILITY COMPANY PRIOR TO ROUGH-IN.

(5) CONNECT 120V RECEPTACLE IN OFFICE SPACE VIA WALL MOUNTED VACANCY SENSOR. SENSOR SHALL "TURN OFF" RECEPTACLES IF SPACE IS UNOCCUPIED FOR 20 MINUTES. RECEPTACLES SHALL BE VISUALLY MARKED AS REQUIRED TO DIFFERENTIATE CONTROLLED RECEPTACLES FROM UNCONTROLLED RECEPTACLES. INSTALLATION SHALL COMPLY WITH FLORIDA BUILDING CODE SECTION C405.7.1, 2014 EDITION AND ASHRAE STANDARD 90.1.

(6) MOUNT OCCUPANCY SENSOR FOR RECEPTACLES UNDER COMMON COVERPLATE WITH ROOM LIGHTING CONTROLS. REFER TO LIGHTING PLAN FOR ADDITIONAL INFORMATION.

(7) COORDINATE EXACT LOCATION WITH THE ELECTRIC UTILITY AND ARCHITECTURAL PLANS. VERIFY 3'-0" CLEARANCE EXISTS IN FRONT OF HOUSE PANEL. A MAXIMUM OF 6'-6" SHALL BE MAINTAINED FROM GRADE TO THE CENTER OF THE HIGHEST METER.

(8) PROVIDE DEDICATED 120V DUPLEX RECEPTACLE, CAT5e, AND COAX CABLE FOR CONNECTION OF TREADMILL. COORDINATE EXACT LOCATION AND CONNECTION REQUIREMENTS WITH EQUIPMENT INSTALLER PRIOR TO ROUGH-IN.

(9) PROVIDE 120V DUPLEX RECEPTACLE, CAT5e, AND COAX CABLE FOR CONNECTION OF FITNESS EQUIPMENT. COORDINATE EXACT LOCATION AND CONNECTION REQUIREMENTS WITH EQUIPMENT INSTALLER PRIOR TO ROUGH-IN.

(10) ELECTRICAL SERVICE EQUIPMENT LOCATION. REFER TO POWER RISER DIAGRAM FOR ADDITIONAL INFORMATION.

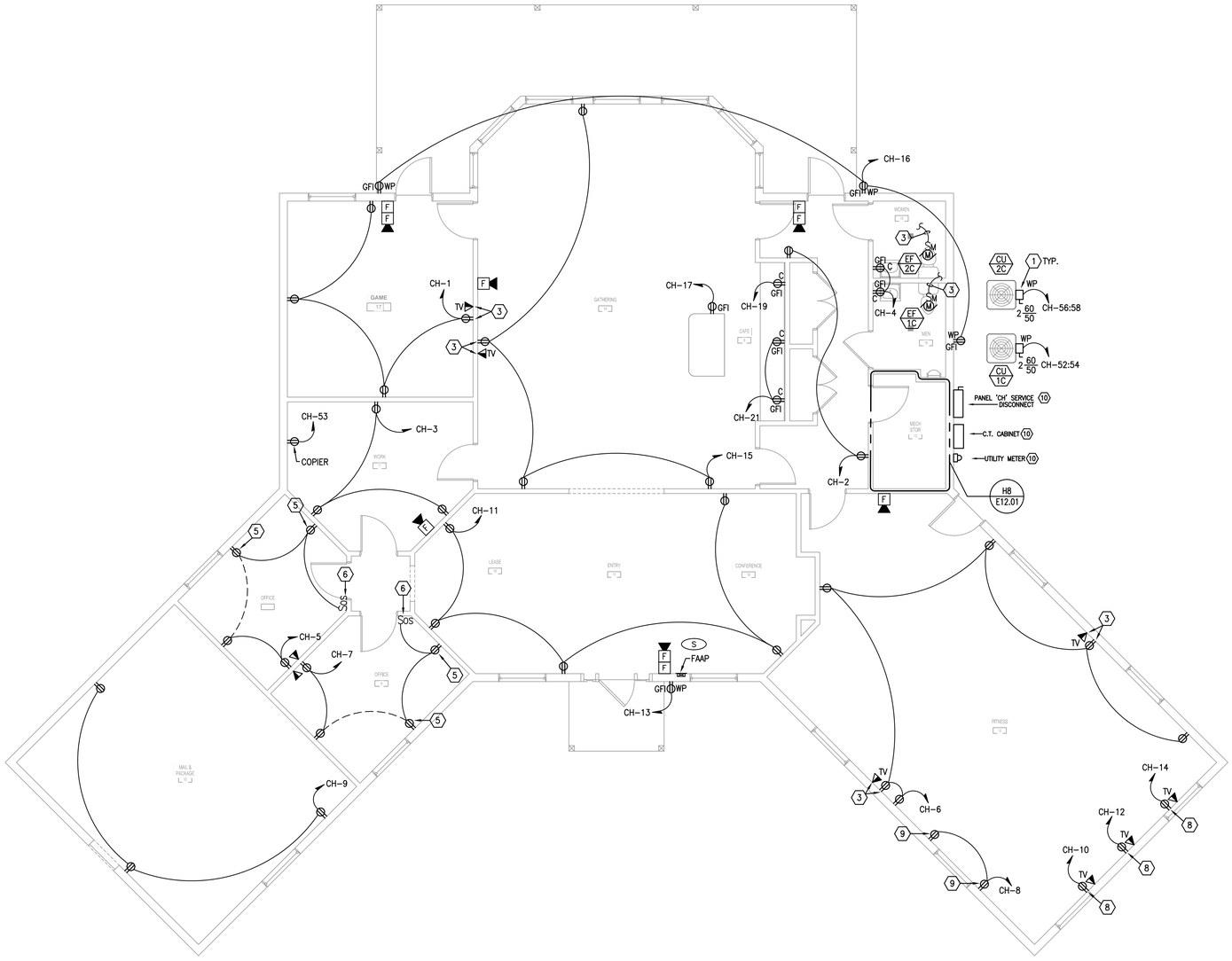

H1 CLUBHOUSE FLOOR PLAN - POWER AND SYSTEMS
3/16" = 1'-0"

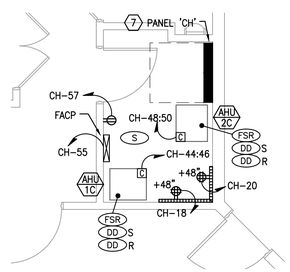

H8 ENLARGED PLAN - CLUBHOUSE MECHANICAL ROOM
1/4" = 1'-0"

PERMIT REVIEW STAMP

ISSUE HISTORY

No.	Date	Description
1	10/06/2017	COORDINATION SET
2	11/10/2017	75%-90% REVIEW COORD. SET

REVISION HISTORY

No.	Date	Description

© 2015 These documents and their contents are the property of FUGLEBERG KOCH, P.L.C. +42000103 and are issued only for the specific project shown. Any reproductions, revisions, or modifications of these documents without the expressed written consent of Fugleberg Koch, P.L.C. is prohibited by law.

FUGLEBERG KOCH
2555 Temple Trail, Winter Park, FL 32789 (407) 629-0595
www.fuglebergkoch.com BR569

CONSULTANT

Joseph, Lawrence & Co Consulting Engineers
1180 HARWOOD AVE. SUITE 3000
ALTAMONTE SPRINGS, FLORIDA 32714
TEL: 321.972.4466
WWW.JLCENG.COM
CA NO. 28730

JLC 17.0137.00

Blake Lawrence Suddeth
P.E. #: 69060

SUMMER BAY APTS. II
LAKE COUNTY, FL

Drawn:	MJR/KCM
Checked:	BLS/AJB
Approval:	BLS/AJB
Date:	11/10/2017
Project #:	5389

CLUBHOUSE FLOOR PLAN - POWER AND SYSTEMS

E12.01

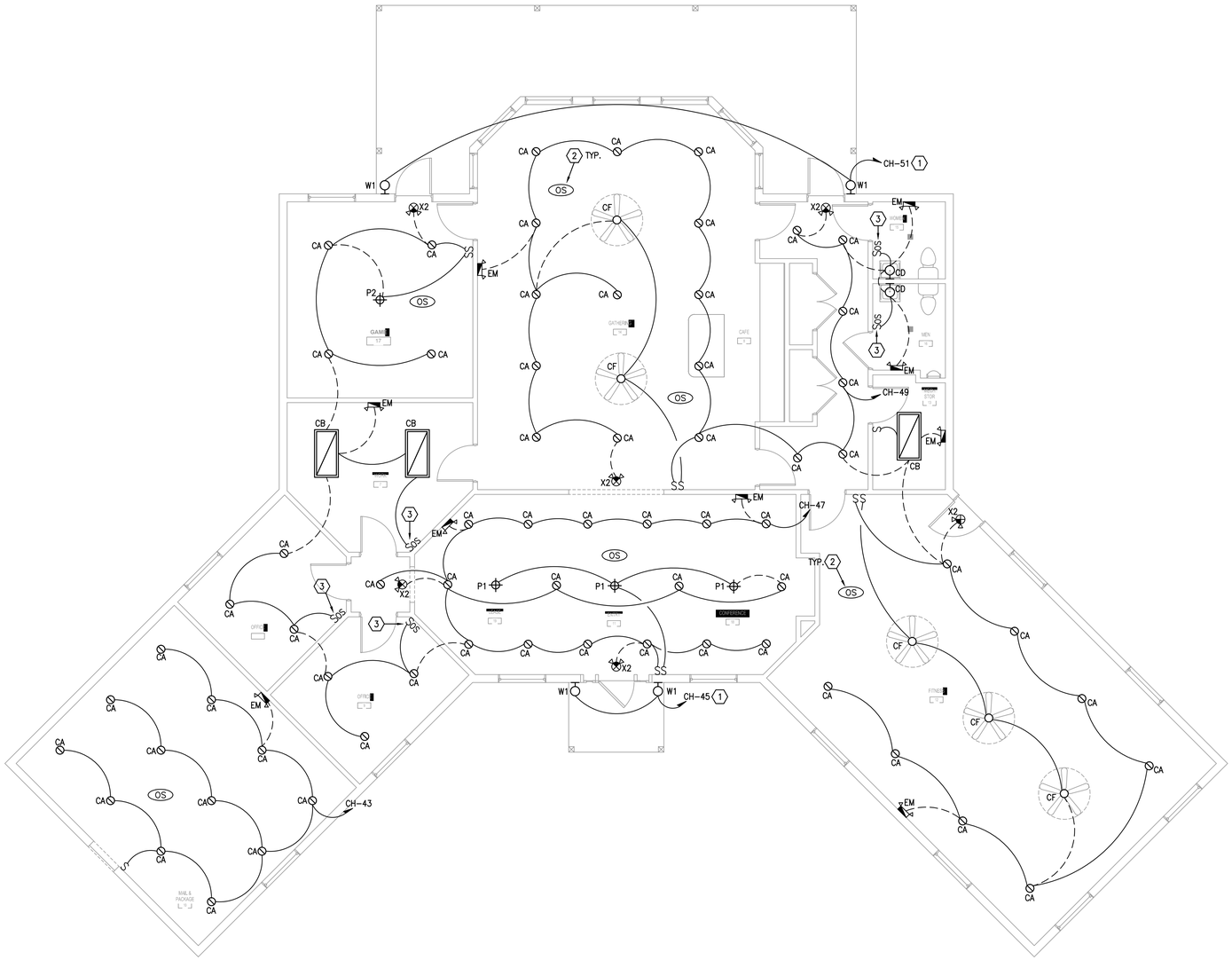

H1 CLUBHOUSE FLOOR PLAN - LIGHTING
3/16" = 1'-0"

GENERAL NOTES:

A. SEE ARCHITECTURAL REFLECTED CEILING PLAN FOR EXACT FIXTURE LOCATIONS AND ORIENTATIONS.

B. REFER TO ARCHITECTURAL ELEVATIONS AND SECTIONS FOR ADDITIONAL LIGHTING FIXTURE MOUNTING DETAILS AND INFORMATION.

C. ALL EMERGENCY LIGHTING FIXTURES AND EXIT SIGNS SHALL BE CONNECTED "HOT" TO THE INDICATED LOCAL LIGHTING CIRCUIT.

D. VERIFY ALL MOUNTING HEIGHTS AND PENDANT LENGTHS WITH ARCHITECT AND ENGINEER PRIOR TO ORDERING FIXTURES.

E. EMERGENCY ILLUMINATION SHALL BE PROVIDED FOR A PERIOD OF 90 MINUTES IN THE EVENT OF FAILURE OF NORMAL LIGHTING. EMERGENCY LIGHTING FACILITIES SHALL BE ARRANGED TO PROVIDE INITIAL ILLUMINATION THAT IS AT LEAST AN AVERAGE OF 1 FOOTCANDLE (10 LUX) AND A MINIMUM AT ANY POINT OF 0.1 FOOTCANDLE (1 LUX) MEASURED ALONG THE PATH OF EGRESS AT FLOOR LEVEL. ILLUMINATION LEVELS SHALL BE PERMITTED TO DECLINE TO 0.6 FOOTCANDLE (6 LUX) AVERAGE AND A MINIMUM AT ANY POINT OF 0.06 FOOTCANDLE (0.6 LUX) AT THE END OF THE EMERGENCY LIGHTING TIME DURATION. A MAXIMUM-TO-MINIMUM ILLUMINATION UNIFORMITY RATIO OF 40:1 SHALL NOT BE EXCEEDED.

REFERENCE NOTES: (X)

(1) CONNECT CIRCUIT VIA LIGHTING CONTACTOR 'LC1' FOR AUTOMATIC CONTROL OF EXTERIOR LIGHT FIXTURES. REFER TO DETAIL FOR ADDITIONAL INFORMATION.

(2) PROVIDE CEILING MOUNTED "MANUAL ON" VACANCY SENSOR TO OVERRIDE WALL SWITCHES AND TURN OFF LIGHTS IF ROOM IS UNOCCUPIED FOR MORE THAN 30 MINUTES. COORDINATE LOCATION WITH CONDITIONS IN FIELD TO PROVIDE MAXIMUM COVERAGE OF SPACE. PROVIDE ADDITIONAL SENSORS, RELAYS, POWER PACKS, ETC. AS REQUIRED TO CONTROL ALL LIGHTS IN ROOM.

(3) PROVIDE WALL MOUNTED OCCUPANCY SENSOR SWITCH TO TURN OFF LIGHTS IF ROOM IS UNOCCUPIED FOR MORE THAN 30 MINUTES. CONTROLS SHALL BE "MANUAL ON/AUTOMATIC OFF" WITH THE EXCEPTION OF RESTROOMS, PUBLIC CORRIDORS, AND LOBBIES. THESE AREAS SHALL BE FULLY "AUTOMATIC ON/AUTOMATIC OFF" IN ACCORDANCE WITH THE 2014 FLORIDA BUILDING CODE 5TH EDITION.

PERMIT REVIEW STAMP

ISSUE HISTORY

No.	Date	Description
1	10/06/2017	COORDINATION SET
2	11/10/2017	75%-90% REVIEW COORD. SET

REVISION HISTORY

No.	Date	Description

FUGLEBERG KOCH
2555 Temple Trail, Winter Park, FL 32789 (407) 629-0595
www.fuglebergkoch.com BR569

CONSULTANT
Joseph, Lawrence & Co
Consulting Engineers
1180 HARWOOD AVE. SUITE 3000
ALTAMONTE SPRINGS, FLORIDA 32714
TEL: 321.972.4466
WWW.JLCENG.COM
CA NO. 28730

JLC 17.0137.00

Blake Lawrence Sandy
P.E. #: 69024

Drawn:	MJR/KCM
Checked:	BLS/AJB
Approval:	BLS/AJB
Date:	11/10/2017
Project #:	5389

SUMMER BAY APTS. II
LAKE COUNTY, FL

CLUBHOUSE FLOOR PLAN - LIGHTING

E12.02

© 2015 These documents and their contents are the property of FUGLEBERG KOCH, PLLC - AA26002103, and are issued only for the specific project noted on these drawings. Any reproductions, revisions, or modifications of these documents without the expressed written consent of Fugleberg Koch, PLLC is prohibited by law.

CONDUIT & CONDUCTOR SIZES: (X)

- (A) 2 SETS [4#250 kcmil AL., IN 2"C.]
- (B) 2 SETS [4#250 kcmil AL., 1#1/0 AWG AL. GND., IN 2-1/2"C.]
- (C) 3#1/0 AWG AL., 1#1/0 AWG AL. GND., IN 2"C.
- (D) 3#1/0 AWG AL., 1#6 AWG AL. GND., IN 2"C.
- (E) 2 SETS [4#250 kcmil AL., 1#1 AWG AL. GND., IN 2-1/2"C.]
- (F) 3#1 AWG AL., 1#6 AWG AL. GND., IN 1-1/2"C.

GENERAL NOTES:

A. DO NOT SCALE ELECTRICAL DRAWING FOR ANY DIMENSIONS.

B. ALL WORK SHALL COMPLY WITH THE 2011 NATIONAL ELECTRIC CODE, NATIONAL, STATE AND LOCAL CODES. PROVIDE GROUNDING AND BONDING PER NEC 250

C. COORDINATE ALL WORK WITH LOCAL UTILITY COMPANY.

REFERENCE NOTES: (X)

(1) REFER TO SITE PLAN – ELECTRICAL, SHEET E18.41 FOR LOCATION OF UTILITY TRANSFORMER.

(2) COORDINATE ALL CONNECTION REQUIREMENTS OF NEW SERVICE WITH LOCAL UTILITY COMPANY PRIOR TO ROUGH-IN AND PROVIDE AS REQUIRED.

(3) PROVIDE HARD WIRED SURGE PROTECTIVE DEVICE OF SAME MANUFACTURER AS DISCONNECT SWITCH.

(4) PROVIDE 400A, 120/208V, 3ø, 4W, NEMA 3R, SERVICE ENTRANCE RATED DISCONNECT SWITCH FUSED AT 400AMPS. COORDINATE ALL REQUIREMENTS WITH UTILITY COMPANY PRIOR TO ROUGH-IN AND PROVIDE AS REQUIRED. PROVIDE PHENOLIC LABELING AT EACH DISCONNECT FOR SERVICE AS REQUIRED BY NEC.

(5) PROVIDE NEMA 3R WIREWAY SIZED AS REQUIRED PER NEC. MINIMUM LENGTH TO BE 6'-0"

(6) PROVIDE 100A, 120/208V, 1ø, 3W, NEMA 3R, SERVICE ENTRANCE RATED DISCONNECT SWITCH FUSED AT 100AMPS FOR POOL PANEL. COORDINATE ALL REQUIREMENTS WITH UTILITY COMPANY PRIOR TO ROUGH-IN AND PROVIDE AS REQUIRED. PROVIDE PHENOLIC LABELING AT EACH DISCONNECT FOR SERVICE AS REQUIRED BY NEC.

(7) POOL PANEL TO BE PROVIDED BY POOL CONTRACTOR AND INSTALLED BY ELECTRICAL CONTRACTOR. COORDINATE LOCATION AND REQUIREMENTS WITH POOL CONTRACTOR AND POOL EQUIPMENT DRAWINGS PRIOR TO ROUGH-IN.

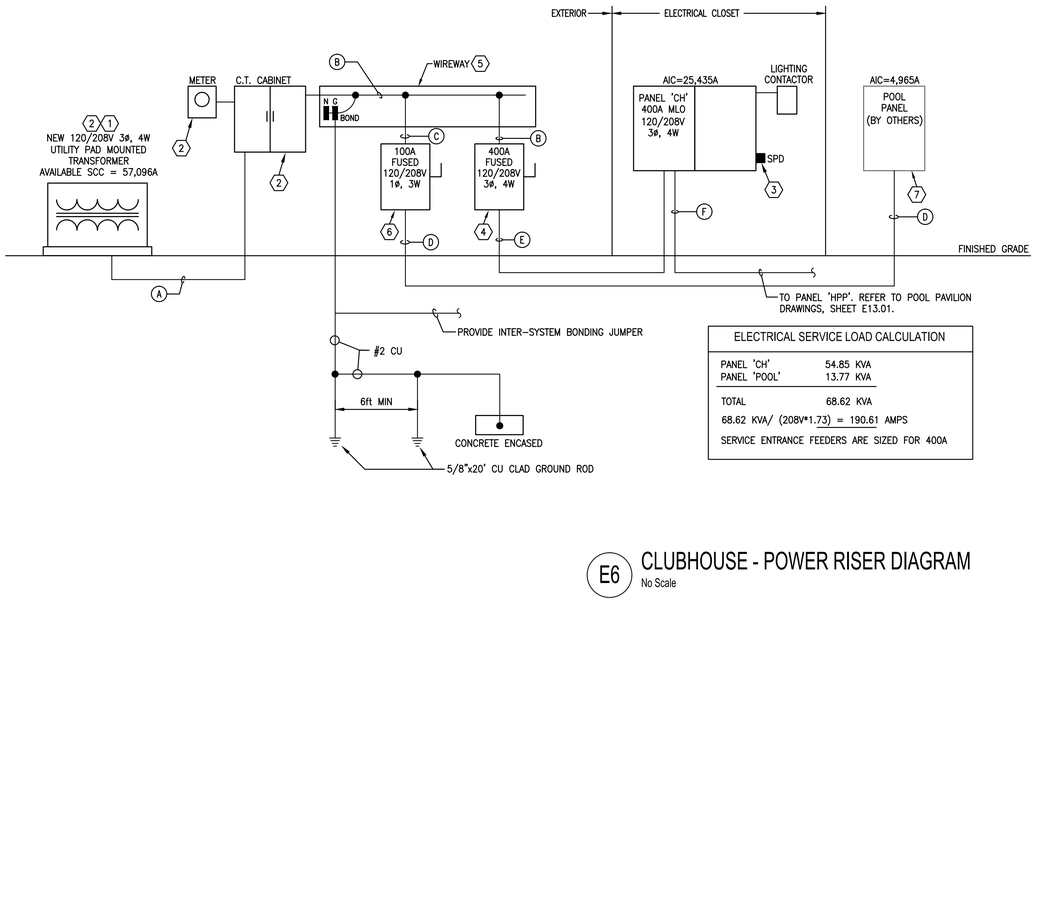

ELECTRICAL SERVICE LOAD CALCULATION

PANEL 'CH'	54.85 KVA
PANEL 'POOL'	13.77 KVA
TOTAL	68.62 KVA

68.62 KVA/ (208V*1.73) = 190.61 AMPS

SERVICE ENTRANCE FEEDERS ARE SIZED FOR 400A

NOTE:
PER (FBC C405.7.3):
FEEDERS ARE DESIGNED FOR A MAXIMUM VOLTAGE DROP OF 2% AT DESIGN LOAD.
BRANCH CIRCUITS ARE DESIGNED FOR A MAXIMUM VOLTAGE DROP OF 3% AT DESIGN LOAD.

E6 CLUBHOUSE - POWER RISER DIAGRAM
No Scale

PERMIT REVIEW STAMP

ISSUE HISTORY

No.	Date	Description
1	10/06/2017	COORDINATION SET
2	11/10/2017	75%-90% REVIEW COORD. SET

REVISION HISTORY

No.	Date	Description

© 2015 These documents and their contents are the property of FUGLEBERG KOCH, P.L.C. (v.4/2007.02) and are issued only for the specific project noted on these drawings. Any reproductions, revisions, or modifications of these documents without the expressed written consent of Fugleberg Koch, P.L.C. is prohibited by law.

FUGLEBERG KOCH
2555 Temple Trail, Winter Park, FL 32789 (407) 629-0595
www.fuglebergkoch.com BR569

CONSULTANT

Joseph, Lawrence & Co
Consulting Engineers
1180 HARWOOD AVE. SUITE 3000
ALTAMONTE SPRINGS, FLORIDA 32714
TEL: 321.972.4466
WWW.JLCENG.COM
CA NO. 28730

JLC 17.0137.00

Blake Joseph Bardsley
P.E. # 69024

SUMMER BAY APTS. II *LAKE COUNTY, FL*	Drawn: MJR/KCM Checked: BLS/AJB Approval: BLS/AJB Date: 11/10/2017 Project #: 5389
CLUBHOUSE RISER DIAGRAMS - ELECTRICAL	
E12.03	

PANEL 'CH' (FIRST SECTION)

LOCATION: MECHANICAL STORAGE ROOM | VOLTAGE: 120/208V 3ø 4W | MIN. AIC RATING: 42K AIC | NOTES: PROVIDE TYPED WRITTEN DIRECTORY PROVIDE GROUND & NEUTRAL BUS

TYPE: SQUARE 'D' – TYPE NQ | MAINS: 400A ☒ MLO ☐ MCB | MOUNTING: SURFACE

FED FROM: SERVICE DISCONNECT | LUGS: ☐ SUB-FEED ☐ FEED-THRU | ENCLOSURE: NEMA 1

CKT	CIRCUIT DESCRIPTION	NOTES	BRANCH CIRCUIT ø	NEUT	GND	COND	BKR	LOAD KVA	PHASE ø	LOAD KVA	BKR	BRANCH CIRCUIT ø	NEUT	GND	COND	NOTES	CIRCUIT DESCRIPTION	CKT
1	RECEPS – GAME ROOM		12	12	12	1/2"	20/1	0.72	A	0.36	20/1	12	12	12	1/2"		RECEPS – CORRIDOR	2
3	RECEPS – WORK ROOM		12	12	12	1/2"	20/1	0.54	B	0.36	20/1	12	12	12	1/2"		RECEPS –BATHROOMS	4
5	RECEPS – OFFICE		12	12	12	1/2"	20/1	0.72	C	1.08	20/1	12	12	12	1/2"		RECEPS – FITNESS AREA	6
7	RECEPS – OFFICE		12	12	12	1/2"	20/1	0.72	A	1.00	20/1	12	12	12	1/2"		FITNESS EQUIPMENT	8
9	RECEPS – MAIL AND PACKAGE ROOM		12	12	12	1/2"	20/1	0.54	B	1.50	20/1	12	12	12	1/2"		TREADMILL	10
11	RECEPS – ENTRY/LEASING		12	12	12	1/2"	20/1	0.90	C	1.50	20/1	12	12	12	1/2"		TREADMILL	12
13	RECEPS – EXTERIOR		12	12	12	1/2"	20/1	0.18	A	1.50	20/1	12	12	12	1/2"		TREADMILL	14
15	RECEPS – GATHERING ROOM		12	12	12	1/2"	20/1	0.72	B	0.54	20/1	12	12	12	1/2"		RECEPS – EXTERIOR	16
17	RECEPS – CAFE ISLAND		12	12	12	1/2"	20/1	0.18	C	0.36	20/1	12	12	12	1/2"		TTB	18
19	RECEPS – CAFE COUNTER		12	12	12	1/2"	20/1	0.18	A	0.36	20/1	12	12	12	1/2"		TTB	20
21	RECEPS – CAFE COUNTER		12	12	12	1/2"	20/1	0.36	B	1.20	20/1	10	10	10	3/4"		GATE MOTOR	22
23	SPARE		–	–	–	–	20/1	–	C	1.20	20/1	10	10	10	3/4"		GATE MOTOR	24
25	SPARE		–	–	–	–	20/1	–	A	0.50	20/1	10	10	10	3/4"		GATE SENSOR	26
27	SPARE		–	–	–	–	20/1	–	B	–	20/1	–	–	–	–		SPARE	28
29	SPARE		–	–	–	–	20/1	–	C	–	20/1	–	–	–	–		SPARE	30
31	SPARE		–	–	–	–	20/1	–	A	–	20/1	–	–	–	–		SPARE	32
33	SPACE ONLY		–	–	–	–	–	–	B	–	20/1	–	–	–	–		SPARE	34
35	SPACE ONLY		–	–	–	–	–	–	C	–	20/1	–	–	–	–		SPARE	36
37	SPACE ONLY		–	–	–	–	–	–	A	–	–	–	–	–	–		SPACE ONLY	38
39	SPACE ONLY		–	–	–	–	–	–	B	–	–	–	–	–	–		SPACE ONLY	40
41	SPACE ONLY		–	–	–	–	–	–	C	–	–	–	–	–	–		SPACE ONLY	42

EQUIPMENT SERVED	CONN. LOAD	L.F.	D.F.	DEMAND LOAD	
RECEPTACLES – GENERAL	8.10 KVA		100%	8.10 KVA	
EQUIPMENT	9.12 KVA		100%	9.12 KVA	
SECOND SECTION	40.53 KVA		100%	40.53 KVA	
NOTES: 1) CONNECT CIRCUIT VIA LIGHTING CONTACTOR 'LC1'					TOTAL DEMAND LOAD: 57.75 KVA
					TOTAL DEMAND AMPS: 160.42 AMPS

PANEL 'CH' (SECOND SECTION)

LOCATION: MECHANICAL STORAGE ROOM | VOLTAGE: 120/208V 3ø 4W | MIN. AIC RATING: 42K AIC | NOTES: PROVIDE TYPED WRITTEN DIRECTORY PROVIDE GROUND & NEUTRAL BUS

TYPE: SQUARE 'D' – TYPE NQ | MAINS: 400A ☒ MLO ☐ MCB | MOUNTING: SURFACE

FED FROM: SERVICE DISCONNECT | LUGS: ☐ SUB-FEED ☒ FEED-THRU | ENCLOSURE: NEMA 1

CKT	CIRCUIT DESCRIPTION	NOTES	BRANCH CIRCUIT ø	NEUT	GND	COND	BKR	LOAD KVA	PHASE ø	LOAD KVA	BKR	BRANCH CIRCUIT ø	NEUT	GND	COND	NOTES	CIRCUIT DESCRIPTION	CKT
43	LIGHTS – MAIL AND PACKAGE ROOM		12	12	12	1/2"	20/1	0.16	A	3.74	45/2	4	4	8	1"		AHU–1C	44
45	LIGHTS – EXTERIOR	1	12	12	12	1/2"	20/1	0.03	B	3.75	–	4	–	–	–		–	46
47	LIGHTS – LEASING/OFFICES/GAMEROOM		12	12	12	1/2"	20/1	0.58	C	3.74	45/2	4	4	8	1"		AHU–2C	48
49	LIGHTS – FITNESS/GATHERING/HALLWAY		12	12	12	1/2"	20/1	0.94	A	3.74	–	4	–	–	–		–	50
51	LIGHTS – EXTERIOR	1	12	12	12	1/2"	20/1	0.03	B	2.73	50/2	4	4	8	1"		CU–1C	52
53	COPIER		12	12	12	1/2"	20/1	1.00	C	2.73	–	4	–	–	–		–	54
55	FACP		12	12	12	1/2"	20/1	0.50	A	2.73	50/2	4	4	8	1"		CU–2C	56
57	RECEPS – MECH. STORAGE ROOM		12	12	12	1/2"	20/1	0.18	B	2.73	–	4	–	–	–		–	58
59	SPARE		–	–	–	–	20/1	–	C	–	20/1	–	–	–	–		SPARE	60
61	SPARE		–	–	–	–	20/1	–	A	–	20/1	–	–	–	–		SPARE	62
63	SPARE		–	–	–	–	20/1	–	B	–	20/1	–	–	–	–		SPARE	64
65	SPARE		–	–	–	–	20/1	–	C	–	20/1	–	–	–	–		SPARE	66
67	SPACE ONLY		–	–	–	–	–	–	A	–	–	–	–	–	–		SPACE ONLY	68
69	SPACE ONLY		–	–	–	–	–	–	B	–	–	–	–	–	–		SPACE ONLY	70
71	SPACE ONLY		–	–	–	–	–	–	C	–	–	–	–	–	–		SPACE ONLY	72
73	SPACE ONLY		–	–	–	–	–	–	A	–	–	–	–	–	–		SPACE ONLY	74
75	SPACE ONLY		–	–	–	–	–	–	B	5.40	80/2	–	–	–	–	2	PANEL 'HPP'	76
77	SPACE ONLY		–	–	–	–	–	–	C	5.40	–	–	–	–	–		–	78
79	SPACE ONLY		–	–	–	–	–	–	A	–	30/3	10	10	10	3/4"		SURGE PROTECTIVE DEVICE (SPD)	80
81	SPACE ONLY		–	–	–	–	–	–	B	–	–	10	–	–	–		–	82
83	SPACE ONLY		–	–	–	–	–	–	C	–	–	10	–	–	–		–	84

EQUIPMENT SERVED	CONN. LOAD	L.F.	D.F.	DEMAND LOAD	
LIGHTING	1.74 KVA		125%	2.18 KVA	
EQUIPMENT/RECEPTACLES	27.56 KVA		100%	27.56 KVA	
PANELS	10.79 KVA		100%	10.79 KVA	
NOTES: 1) CONNECT CIRCUIT VIA LIGHTING CONTACTOR 'LC1' 2) REFER TO RISER DIAGRAM FOR FEEDER INFORMATION					TOTAL DEMAND LOAD: 40.53 KVA
					LOAD CARRIED OVER TO FIRST SECTION

LIGHTING FIXTURE SCHEDULE - CLUBHOUSE

MARK	DESCRIPTION	MANUFACTURER	MODEL	VOLTS	LAMP QTY	LAMP WATTS	LAMP MODEL	FIXTURE WATTS
CA	AIR TIGHT, IC–RATED, RECESSED LED 6" DOWNLIGHT	JUNO	IC22LED–G4–14LM–30K–90CRI–MVOLT–ZT	120	–	13	LED	13
CB	SURFACE MOUNTED LED WRAPAROUND FIXTURE	COLUMBIA	LAW4–30LW–EU	120	1	23	LED	23
CD	DECORATIVE LED WALL MOUNTED VANITY FIXTURE LOCATED AT RESTROOMS	TBD	TBD	120	1	17	LED	17
CF	INTERIOR 52" CEILING FAN LOCATED AT FITNESS AND LOBBY	TBD	TBD	120	–	–	–	100
P1	LARGE DECORATIVE LED PENDANT FIXTURE LOCATED AT LOBBY	TBD	TBD	120	1	50	LED	50
P2	DECORATIVE LED PENDANT FIXTURE LOCATED AT GAME ROOM	TBD	TBD	120	1	25	LED	25
W1	EXTERIOR DECORATIVE LED WALL SCONCE FIXTURE LOCATED AT CLUBHOUSE ENTRANCE. UL WET LABEL RATED.	TBD	TBD	120	1	17	LED	17
EM	WALL MOUNTED EMERGENCY LIGHT WITH THERMOPLASTIC HOUSING, TWIN HEADS AND BATTERY BACKUP	DUAL LITE	EV4–02L	120	2	2	LED	4
X1	SINGLE FACE EXIT SIGN WITH WHITE THERMOPLASTIC HOUSING, RED LETTERS AND BATTERY BACKUP.	DUAL LITE	EVE–U–R–W–E	120	–	–	LED	–
X2	COMBINATION SINGLE FACE EXIT SIGN AND EMERGENCY LIGHT WITH THERMOPLASTIC HOUSING, BATTERY BACKUP, TWIN HEADS, AND RED LETTERS	DUAL LITE	EVC–U–R–W	120	2	2	LED	4

NOTES:
1) DIVISION 16 CONTRACTOR SHALL VERIFY ALL FIXTURE TYPES AND FINISHES WITH OWNER PRIOR TO ORDERING.

PERMIT REVIEW STAMP

ISSUE HISTORY

No.	Date	Description
1	10/06/2017	COORDINATION SET
2	11/10/2017	75%-90% REVIEW COORD. SET

REVISION HISTORY

No.	Date	Description

© 2015 These documents and their contents are the property of FUGLEBERG KOCH, P.L.C. and are issued only for the specific project noted on these drawings. Any reproductions, revisions, or modifications of these documents without the expressed written consent of Fugleberg Koch, P.L.C. is prohibited by law.

FUGLEBERG KOCH
2555 Temple Trail, Winter Park, FL 32789 (407) 629-0595
www.fuglebergkoch.com BR569

CONSULTANT
Joseph, Lawrence & Co
Consulting Engineers
1180 HARWOOD AVE. SUITE 3000
ALTAMONTE SPRINGS, FLORIDA 32714
TEL: 321.972.4466
WWW.JLCENG.COM
CA NO. 28730

JLC 17.0137.00

Blake Joseph Bardsley
P.E. #: 69024

Drawn:	MJR/KCM
Checked:	BLS/AJB
Approval:	BLS/AJB
Date:	11/10/2017
Project #:	5389

SUMMER BAY APTS. II
LAKE COUNTY, FL

CLUBHOUSE SCHEDULES - ELECTRICAL

E12.04

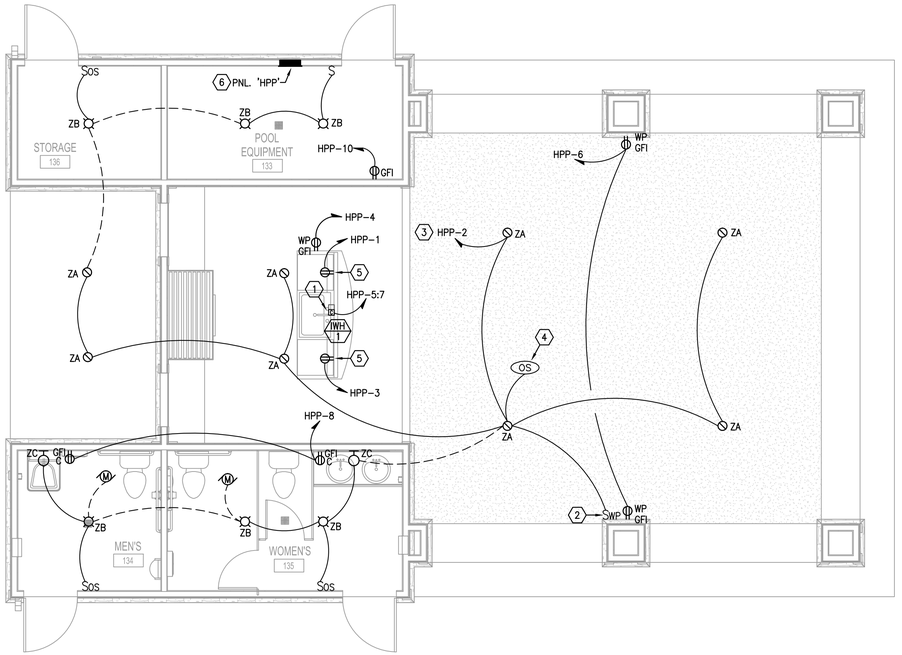

E4 POOL PAVILION FLOOR PLAN - ELECTRICAL

1/4" = 1'-0"

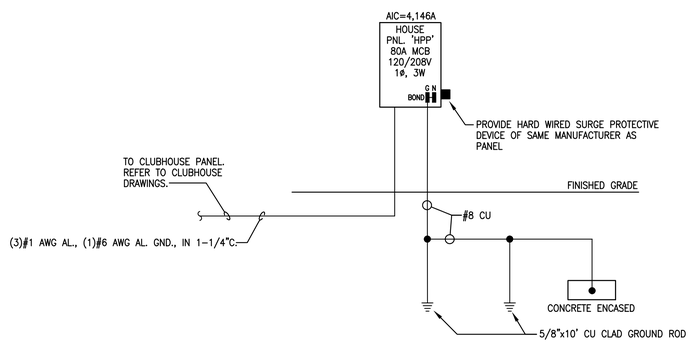

NOTE:
PER (FBC C405.7.3):
FEEDERS ARE DESIGNED FOR A MAXIMUM VOLTAGE DROP OF 2% AT DESIGN LOAD.
BRANCH CIRCUITS ARE DESIGNED FOR A MAXIMUM VOLTAGE DROP OF 3% AT DESIGN LOAD.

H1 POOL PAVILION BUILDING POWER RISER DIAGRAM

No Scale

GENERAL NOTES:

A. DO NOT SCALE ELECTRICAL DRAWINGS FOR ANY DIMENSIONS.

B. ALL WORK SHALL COMPLY WITH THE 2011 NATIONAL ELECTRIC CODE, NATIONAL, STATE AND LOCAL CODES. PROVIDE GROUNDING AND BONDING PER NEC 250.

C. SEE SINGLE LINE DIAGRAM FOR FEEDER WIRE AND CONDUIT SIZE. ALL CIRCUITS NOT SIZED ON DRAWING SHALL BE INSTALLED TO MEET MINIMUM SIZE REQUIRED BY NEC. ALL CONDUCTORS SHALL HAVE AN EQUIPMENT GROUND WIRE SIZED PER NEC.

D. FIELD VERIFY EXACT LOCATION OF ALL DEVICES AND EQUIPMENT PRIOR TO ROUGH IN.

E. SEE ARCHITECTURAL REFLECTED CEILING PLAN FOR EXACT FIXTURE LOCATIONS AND ORIENTATIONS.

F. REFER TO ARCHITECTURAL ELEVATIONS AND SECTIONS FOR ADDITIONAL LIGHTING FIXTURE MOUNTING DETAILS AND INFORMATION.

G. ALL EMERGENCY LIGHTING FIXTURES AND EXIT SIGNS SHALL BE CONNECTED "HOT" TO THE INDICATED LOCAL LIGHTING CIRCUIT.

H. VERIFY ALL MOUNTING HEIGHTS AND PENDANT LENGTHS WITH ARCHITECT AND ENGINEER PRIOR TO ORDERING FIXTURES.

REFERENCE NOTES: (X)

(1) PROVIDE CONNECTION FOR INSTA-HOT WATER HEATER. COORDINATE LOCATION AND CONNECTION REQUIREMENTS WITH PLUMBING CONTRACTOR AND OWNER PRIOR TO ROUGH-IN.

(2) WEATHERPROOF SWITCHES TO BE MOUNTED IN ARCHITECTURAL COLUMN. COORDINATE LOCATION WITH ARCHITECT/OWNER PRIOR TO ROUGH-IN.

(3) CONNECT CIRCUIT TO PANEL VIA PHOTOCELL FOR ON/OFF CONTROL.

(4) PROVIDE CEILING MOUNTED OCCUPANCY SENSOR TO "TURN OFF" LIGHTS AND FANS IF GAZEBO IS UNOCCUPIED.

(5) PROVIDE 120V RECEPTACLE BELOW COUNTER FOR KITCHEN EQUIPMENT PROVIDED BY OWNER. COORDINATE LOCATION AND CONNECTION REQUIREMENTS WITH OWNER PRIOR TO ROUGH-IN.

POOL PAVILION LIGHT FIXTURE SCHEDULE

MARK	DESCRIPTION	MANUFACTURER	MODEL	VOLTS	LAMP QTY	LAMP WATTS	LAMP MODEL	FIXTURE WATTS	REMARKS
ZA	6" DIAMETER COMPACT FLUORESCENT DOWNLIGHT, DAMP LOCATION, ELECTRONIC BALLAST	PROGRESS	P60-FB/P8088-21A	120	1	26	CFL	26	
ZB	SURFACE MOUNTED LED FIXTURE. UL DAMP LABEL RATED.	TBD	TBD	120	1	17	LED	17	
ZC	DECORATIVE WALL MOUNTED LED FIXTURE LOCATED AT VANITY. UL DAMP LABEL RATED.	TBD	TBD	120	–	17	LED	17	

NOTES:
DIVISION 16 CONTRACTOR SHALL VERIFY ALL FIXTURE TYPES AND FINISHES WITH OWNER PRIOR TO ORDERING.

PANEL HPP

LOCATION: POOL CABANA | VOLTAGE: 120/208V 1ø 3W | MIN. AIC RATING: 10 KAIC
TYPE: SQUARE 'D' – TYPE QO | MAINS: 80A ☐ MLO ☒ MCB | MOUNTING: SURFACE
FED FROM: UTILITY TRANSFORMER | LUGS: ☐ SUB-FEED ☐ FEED-THRU | ENCLOSURE: NEMA 3R

NOTES:
PROVIDE TYPED WRITTEN DIRECTORY
PROVIDE GROUND & NEUTRAL BUS
TYPE 'NM' CABLE WHERE APPROVED BY A.H.J.

CKT	CIRCUIT DESCRIPTION	NOTES	BRANCH CIRCUIT ø	NEUT	GND	COND	BKR	LOAD KVA	PHASE ø	LOAD KVA	BKR	BRANCH CIRCUIT ø	NEUT	GND	COND	NOTES	CIRCUIT DESCRIPTION	CKT
1	KITCHEN EQUIPMENT		12	12	12	1/2"	20/1	0.50	A	0.35	20/1	12	12	12	NM	1	LIGHTING	2
3	KITCHEN EQUIPMENT		12	12	12	1/2"	20/1	0.50	B	0.18	20/1	12	12	12	NM		RECEPTACLES	4
5	IWH-1		6	–	10	1.25"	50/2	4.15	A	0.36	20/1	12	12	12	NM		RECEPTACLES	6
7	–		6	–	–	–	–	4.15	B	0.36	20/1	12	12	12	NM		RECEPTACLES	8
9	SPARE		–	–	–	–	20/1	–	A	0.18	20/1	12	12	12	NM		RECEPTACLES	10
11	SPARE		–	–	–	–	20/1	–	B	–	–	–	–	–	–		SPACE ONLY	12
13	SPARE		–	–	–	–	20/1	–	A	–	–	–	–	–	–		SPACE ONLY	14
15	SPACE ONLY		–	–	–	–	–	–	B	–	30/2	10	10	10	1/2"		SURGE PROTECTIVE DEVICE (SPD)	16
17	SPACE ONLY		–	–	–	–	–	–	A	–	–	10	–	–	–		–	18

EQUIPMENT SERVED	CONN. LOAD	L.F.	D.F.	DEMAND LOAD	
LIGHTING	0.35 KVA		125%	0.44 KVA	
EQUIPMENT/RECEPTACLES	10.38 KVA		100%	10.38 KVA	
NOTES: 1) CONNECT CIRCUIT VIA PHOTOCELL				TOTAL DEMAND LOAD:	10.79 KVA
				TOTAL DEMAND AMPS:	51.88 AMPS

PERMIT REVIEW STAMP

ISSUE HISTORY

No.	Date	Description
1	10/06/2017	COORDINATION SET
2	11/10/2017	75%-90% REVIEW COORD. SET

REVISION HISTORY

No.	Date	Description

© 2017 These documents and the ideas and designs incorporated herein, as an instrument of service, are and shall remain the property of FUGLEBERG KOCH, P.L.C. +ADD01(0) and are not to be used in any way for the specific project noted on these drawings. Any reproductions, revisions, or modifications of these documents without the expressed written consent of Fugleberg Koch, P.L.C. is prohibited by law.

FUGLEBERG KOCH
2555 Temple Trail, Winter Park, FL 32789 (407) 629-0595
www.fuglebergkoch.com BR569

CONSULTANT

Joseph, Lawrence & Co
Consulting Engineers
1180 HARWOOD AVE. SUITE 3000
ALTAMONTE SPRINGS, FLORIDA 32714
TEL: 321.972.4466
WWW.JLCENG.COM
CA NO. 28730

JLC 17.0137.00

Blake Lawrence Suddeth
P.E. #: 69060

SUMMER BAY APTS. II
LAKE COUNTY, FL

Drawn:	MJR/KCM
Checked:	BLS/AJB
Approval:	BLS/AJB
Date:	11/10/2017
Project #:	5389

POOL PAVILION FLOOR PLAN - ELECTRICAL

E13.01

LIGHTING FIXTURE SCHEDULE - MAINT. GARAGE

MARK	DESCRIPTION	MANUFACTURER (OR EQUAL)	MODEL (OR EQUAL)	VOLTS	LAMP QTY	LAMP WATTS	LAMP MODEL	FIXTURE WATTS
MA	SURFACE MOUNTED LINEAR FLUORESCENT WRAPAROUND FIXTURE WITH PRISMATIC ACRYLIC LENS	COLUMBIA	AWN4-232-EU	120	2	32	T8	64
MB	EXTERIOR STAINLESS STEEL BRACKET LIGHT WITH CLEAR GLASS LENS. UL WET LABEL RATED	TBD	TBD	120	1	17	LED	17
EM	WALL MOUNTED EMERGENCY LIGHT WITH THERMOPLASTIC HOUSING, TWIN HEADS AND BATTERY BACKUP	DUAL LITE	EV2	120	2	2	LED	4
X1	SINGLE FACE EXIT SIGN WITH WHITE THERMOPLASTIC HOUSING, RED LETTERS AND BATTERY BACKUP	DUAL LITE	EVE-U-R-W-E	120	–	–	LED	–

NOTES:
DIVISION 16 CONTRACTOR SHALL VERIFY ALL FIXTURE TYPES AND FINISHES WITH OWNER PRIOR TO ORDERING.

PANEL HM

LOCATION: MAINT. GARAGE | VOLTAGE: 120/208V 3ø 4W | MIN. AIC RATING: 10 KAIC
TYPE: SQUARE 'D' - TYPE NQ | MAINS: 100A ☐ MLO ☒ MCB | MOUNTING: SURFACE
FED FROM: UTILITY TRANSFORMER | LUGS: ☐ SUB-FEED ☐ FEED-THRU | ENCLOSURE: NEMA 1

NOTES:
PROVIDE TYPED WRITTEN DIRECTORY
PROVIDE GROUND & NEUTRAL BUS

CKT	CIRCUIT DESCRIPTION	NOTES	BRANCH CIRCUIT ø	NEUT	GND	COND	BKR	LOAD KVA	PHASE ø	LOAD KVA	BKR	BRANCH CIRCUIT ø	NEUT	GND	COND	NOTES	CIRCUIT DESCRIPTION	CKT
1	RECEPS - MAINT. EQUIPMENT		12	12	12	1/2"	20/1	0.72	A	0.20	20/1	12	12	12	1/2"		LIGHTING - MAINT. GARAGE	2
3	RECEPS - GENERAL		12	12	12	1/2"	20/1	0.18	B	0.26	20/1	12	12	12	1/2"		LIGHTING - MAINT. GARAGE	4
5	RECEPS - MAINT. EQUIPMENT		12	12	12	1/2"	20/1	0.36	C	0.07	20/1	12	12	12	1/2"	1	LIGHTING - EXTERIOR	6
7	RECEPS - GARAGE		12	12	12	1/2"	20/1	0.36	A	1.00	20/1	12	12	12	1/2"		GARAGE DOOR OPENER	8
9	TRASH COMPACTOR		8	8	10	1"	40/3	3.70	B	0.15	20/1	12	12	12	1/2"		LIGHTING - TRASH EXTERIOR	10
11	–		8	–	–	–	–	3.70	C	0.18	20/1	12	12	12	1/2"		RECEPS - TRASH COMPACTOR	12
13	–		8	–	–	–	–	3.70	A	–	20/1	–	–	–	–		SPARE	14
15	SPARE		–	–	–	–	20/1	–	B	–	20/1	–	–	–	–		SPARE	16
17	SPARE		–	–	–	–	20/1	–	C	–	20/1	–	–	–	–		SPARE	18
19	SPARE		–	–	–	–	20/1	–	A	–	20/1	–	–	–	–		SPARE	20
21	SPARE		–	–	–	–	20/1	–	B	–	–	–	–	–	–		SPACE ONLY	22
23	SPACE ONLY		–	–	–	–	–	–	C	–	–	–	–	–	–		SPACE ONLY	24
25	SPACE ONLY		–	–	–	–	–	–	A	–	30/3	10	10	10	3/4"		SURGE PROTECTIVE DEVICE (SPD)	26
27	SPACE ONLY		–	–	–	–	–	–	B	–	–	10	–	–	–		–	28
29	SPACE ONLY		–	–	–	–	–	–	C	–	–	10	–	–	–		–	30

EQUIPMENT SERVED	CONN. LOAD	L.F.	D.F.	DEMAND LOAD	
LIGHTING	0.68 KVA		125%	0.85 KVA	
RECEPTACLES - GENERAL	1.80 KVA		100%	1.80 KVA	
EQUIPMENT	12.10 KVA		100%	12.10 KVA	
NOTES: 1) CONNECT CIRCUIT VIA PHOTOCELL					TOTAL DEMAND LOAD: 14.75 KVA
					TOTAL DEMAND AMPS: 40.97 AMPS

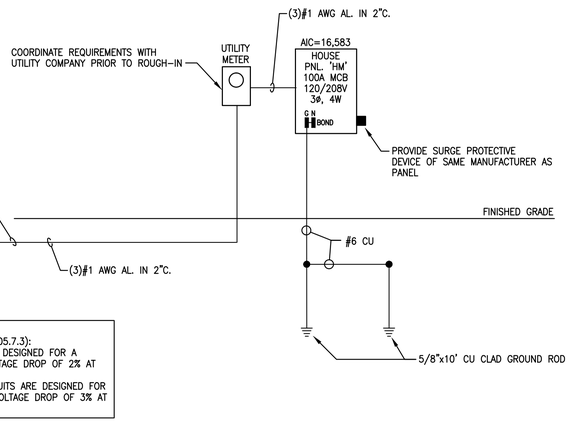

NOTE:
PER (FBC C405.7.3):
FEEDERS ARE DESIGNED FOR A MAXIMUM VOLTAGE DROP OF 2% AT DESIGN LOAD.
BRANCH CIRCUITS ARE DESIGNED FOR A MAXIMUM VOLTAGE DROP OF 3% AT DESIGN LOAD.

H1 Maintenance Building Power Riser Diagram
No Scale

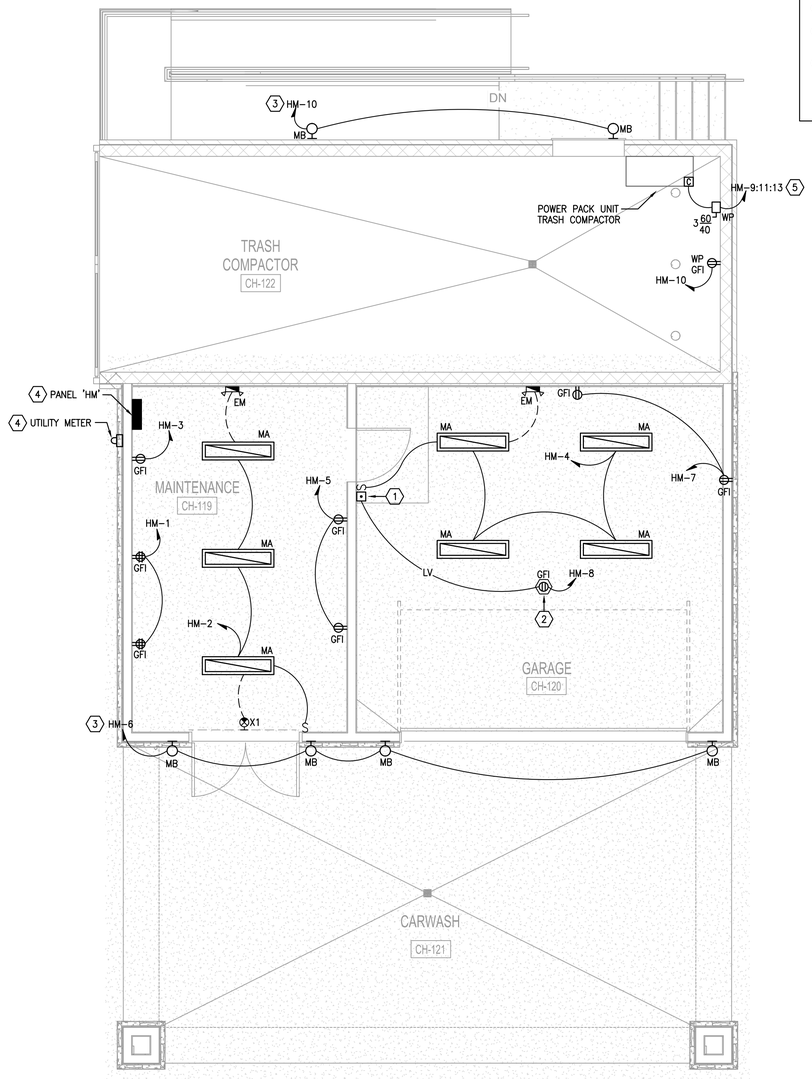

H5 MAINTENANCE FLOOR PLAN - ELECTRICAL
1/4" = 1'-0"

GENERAL NOTES:

A. DO NOT SCALE ELECTRICAL DRAWINGS FOR ANY DIMENSIONS.

B. ALL WORK SHALL COMPLY WITH THE 2011 NATIONAL ELECTRIC CODE, NATIONAL, STATE AND LOCAL CODES. PROVIDE GROUNDING AND BONDING PER NEC 250.

C. SEE SINGLE LINE DIAGRAM FOR FEEDER WIRE AND CONDUIT SIZE. ALL CIRCUITS NOT SIZED ON DRAWING SHALL BE INSTALLED TO MEET MINIMUM SIZE REQUIRED BY NEC. ALL CONDUCTORS SHALL HAVE AN EQUIPMENT GROUND WIRE SIZED PER NEC.

D. FIELD VERIFY EXACT LOCATION OF ALL DEVICES AND EQUIPMENT PRIOR TO ROUGH IN.

REFERENCE NOTES: ⟨X⟩

⟨1⟩ PROVIDE PUSHBUTTON CONTROL AND LOW VOLTAGE WIRING FOR GARAGE DOOR OPENER AS REQUIRED BY OWNER/MANUFACTURER.

⟨2⟩ PROVIDE 120V CEILING MOUNTED OUTLET FOR GARAGE DOOR OPENER. COORDINATE LOCATION WITH DOOR INSTALLER PRIOR TO ROUGH-IN. PROVIDE LOW VOLTAGE WIRING AND PUSH BUTTON LOCATED NEAR DOOR AS REQUIRED.

⟨3⟩ CONNECT CIRCUIT VIA PHOTOCELL FOR AUTOMATIC CONTROL OF LIGHT FIXTURES.

⟨4⟩ COORDINATE PANEL AND METER LOCATION WITH OWNER, CIVIL CONTRACTOR AND UTILITY COMPANY PRIOR TO ROUGH-IN.

⟨5⟩ PROVIDE DISCONNECT SWITCH FOR CONNECTION OF TRASH COMPACTOR. COORDINATE DISCONNECT SIZE, LOCATION, AND FUSING REQUIREMENTS WITH TRASH COMPACTOR MANUFACTURER PRIOR TO ROUGH-IN. PROVIDE CONDUIT AND CONTROL WIRING FOR CONTROL PANEL AS REQUIRED BY MANUFACTURER.

PERMIT REVIEW STAMP

ISSUE HISTORY

No.	Date	Description
1	10/06/2017	COORDINATION SET
2	11/10/2017	75%-90% REVIEW COORD. SET

REVISION HISTORY

No.	Date	Description

© 2015 These documents and their contents are the property of FUGLEBERG KOCH, P.L.C. (v.4200812.0) and are issued only for the specific project noted on these drawings. Any reproductions, revisions, or modifications of these documents without the expressed written consent of Fugleberg Koch, P.L.C. is prohibited by law.

FUGLEBERG KOCH
2555 Temple Trail, Winter Park, FL 32789 (407) 629-0595
www.fuglebergkoch.com BR569

CONSULTANT
Joseph, Lawrence & Co Consulting Engineers
1180 HARWOOD AVE. SUITE 3000
ALTAMONTE SPRINGS, FLORIDA 32714
TEL: 321.972.4466
WWW.JLCENG.COM
CA NO. 28730

JLC 17.0137.00

Blake Lawrence Suddeth
P.E. #: 69060

SUMMER BAY APTS. II
LAKE COUNTY, FL

Drawn:	MJR/KCM
Checked:	BLS/AJB
Approval:	BLS/AJB
Date:	11/10/2017
Project #:	5389

MAINTENANCE FLOOR PLAN - ELECTRICAL

E13.02

FIRE PROTECTION LEGEND

——F——	FIRE PROTECTION PIPING
——DP——	DRY PIPE SYSTEM PIPING
——STP——	STANDPIPE SYSTEM
	PIPE TURNING DOWN
	PIPE TURNING UP
	PIPE CAP
	CONTROL VALVE
	CHECK VALVE
	OS&Y GATE VALVE
	VALVE WITH TAMPER SWITCH
FHV	FIRE HOSE VALVE
FS	FLOW SWITCH
FVC	FIRE VALVE CABINET
GPM	GALLONS PER MINUTE
ITC	INSPECTOR'S TEST CONNECTION
PS	PRESSURE SWITCH
PSI	POUNDS PER SQUARE INCH
SF	SQUARE FOOT
SP	STANDPIPE
TS	TAMPER SWITCH
WP	WET PIPE

FIRE PROTECTION GENERAL NOTES (APARTMENTS)

APPLICABLE CODES: FBC FLORIDA BUILDING CODE (2014) 5TH EDITION
FFPC FLORIDA FIRE PREVENTION CODE (2014) 5TH EDITION
NFPA 13R, 14, 24 & 25. EDITION 2010

1. WET PIPE SPRINKLER SYSTEM DESIGNED PER NFPA 13R, CLASS 1, MANUAL WET STANDPIPE SYSTEM DESIGNED IN ACCORDANCE WITH NFPA 14. 500 GPM/100 PSI 1ST STANDPIPE, 250 GPM/100 PSI EACH ADDITIONAL STANDPIPE. RESIDENTIAL OCCUPANCY (DWELLING UNITS) USING ALL SPRINKLERS IN A COMPARTMENT, UP TO A MAXIMUM OF FOUR SPRINKLERS, THAT REQUIRES THE GREATEST HYDRAULIC DEMAND PER THEIR LISTING TO MEET OR EXCEED THE REQUIREMENTS OF NFPA 13R AND LOCAL AUTHORITIES.
2. ALL FIRE SPRINKLERS SHALL BE IN ACCORDANCE WITH NFPA 13R. RESIDENTIAL SPRINKLERS SHALL BE USED INSIDE THE DWELLING UNITS PER NFPA 13R, ALL OTHER SPRINKLERS SHALL BE OF THE QUICK RESPONSE TYPE.
3. ALL MATERIALS, FABRICATION AND INSTALLATION IS TO BE IN ACCORDANCE WITH NFPA 13R, 2010 EDITION, NFPA 14, AND APPROVED BY THE LOCAL AUTHORITIES.
4. ALL HANGERS & MATERIALS TO BE IN ACCORDANCE WITH NFPA 13R, NFPA 14.
5. FIRE SPRINKLER CONTRACTOR WILL VISIT THE SITE AND VERIFY ALL CONDITIONS BEFORE ANY FABRICATION AND INSTALLATION HAS BEGUN.
6. FIRE SPRINKLER CONTRACTOR WILL COORDINATE WORK WITH OTHER TRADES THAT MAY COME INTO CONFLICT BEFORE ANY INSTALLATION.
7. FIRE SPRINKLER CONTRACTOR TO COORDINATE SPRINKLER LOCATIONS WITH ALL OTHER CEILING AND WALL FIXTURES. SEE ARCHITECTURAL PLANS FOR CEILING FIXTURE LOCATIONS.
8. ALL BRANCH LINES AND CROSS MAINS ON RESIDENTIAL UNIT FLOORS TO BE BLAZEMASTER CPVC (OR APPROVED EQUAL) PER THEIR LISTING AND GALVANIZED STEEL PIPE FOR ANY EXPOSED PIPING INCLUDING THE FIRE SPRINKLER RISER. ALL TRANSITIONS FROM STEEL TO CPVC PIPING WILL BE MADE WITH UL APPROVED FITTINGS.
9. ALL FITTINGS FOR CPVC BRANCH LINES AND CROSS MAINS TO BE BLAZEMASTER CPVC (OR APPROVED EQUAL). ALL FITTINGS FOR THE GALVANIZED STEEL PIPING SHALL BE BLACK CAST IRON OR GROOVED.
10. ALL FIRE SPRINKLER COMPONENTS SHALL BE U.L. APPROVED.
11. UPRIGHT SPRINKLERS TO BE LOCATED BETWEEN 1" AND 12" BELOW ROOF DECK WHERE REQUIRED.
12. SPRINKLER HEAD SPACING IS PER NFPA 13R AND MANUFACTURER'S LISTING.
13. THE CONSTRUCTION MANAGER SHALL PROVIDE, OR HAVE PROVIDED, A SET OF COORDINATION DRAWINGS FOR ALL SYSTEMS AND FEATURES THAT OCCUR ABOVE THE CEILING PLANE. THE COORDINATION DRAWINGS SHALL INCLUDE, BUT NOT BE LIMITED TO, STRUCTURAL MEMBERS, HVAC DUCTWORK, HYDRAULIC PIPING, PLUMBING SUPPLY AND WASTE PIPING, FIRE PROTECTION PIPING, ELECTRICAL POWER CONDUITS AND RACEWAYS, AND ELECTRICAL LOW VOLTAGE CONDUITS AND RACEWAYS. THE COORDINATION DRAWINGS SHALL PROVIDE, APPORTION, AND COORDINATE SPACE FOR ALL SYSTEMS, HORIZONTALLY AND VERTICALLY ABOVE THE CEILING PLANE TO THE STRUCTURAL DECK ABOVE ALLOWING EACH TRADE CONTRACTOR THE SPACE TO PROPERLY EXECUTE HIS PORTION OF THE WORK.
14. THE FOLLOWING AREAS ARE NOT REQUIRED TO HAVE SPRINKLER HEADS PER NFPA 13R:
    A. BATHROOMS NOT EXCEEDING 55 SQ. FT. WITH NONCOMBUSTIBLE WALLS AND CEILINGS.
    B. CLOTHES CLOSETS, LINEN CLOSETS AND PANTRIES NOT EXCEEDING 24 SQ. FT. & 36" FOR THE LEAST WALL DIMENSION.
    C. PORCHES, STAIRS THAT ARE OPEN AND ATTACHED.
    D. ATTICS, PENTHOUSE EQUIPMENT ROOMS, ELEVATOR MACHINE ROOMS, CONCEALED SPACES DEDICATED EXCLUSIVELY TO AND CONTAINING ONLY DWELLING UNIT VENTILATION EQUIPMENT, CRAWL SPACES, FLOOR/CEILING SPACES, ELEVATOR SHAFTS, AND OTHER CONCEALED SPACES THAT ARE NOT USED OR INTENDED FOR LIVING PURPOSES OR STORAGE AND DO NOT CONTAIN FUEL FIRED EQUIPMENT. SPRINKLERS SHALL NOT BE REQUIRED IN CLOSETS ON EXTERIOR BALCONIES, REGARDLESS OF SIZE, AS LONG AS THERE ARE NO DOORS OR UNPROTECTED PENETRATIONS FROM THE CLOSET DIRECTLY INTO THE DWELLING UNIT.
15. ALL GROOVED FITTINGS TO BE "VICTAULIC" FITTINGS OR APPROVED EQUAL.
16. ALL PENETRATIONS THRU 1-HOUR AND 2-HOUR RATED WALLS TO BE PATCHED AS NECESSARY.
17. ALL DIMENSIONS TO BE VERIFIED DURING FIELD CHECK OF SPRINKLER SYSTEM.
18. THE FOLLOWING ARE ACCEPTABLE SPRINKLER HEAD MATERIAL MANUFACTURERS: RELIABLE, TYCO, VICTAULIC, VIKING.
19. FLOW SWITCHES, TAMPER SWITCHES AND ALARM BELL SHALL BE PROVIDED AND INSTALLED BY THE FIRE SPRINKLER CONTRACTOR. SPRINKLER SYSTEMS AND ALL ASSOCIATED FIRE PROTECTION SIGNALS SHALL BE SUPERVISED BY AN APPROVED CENTRAL, PROPRIETARY, AUXILIARY, OR REMOTE STATION SYSTEM IN ACCORDANCE WITH NFPA 13R. ALL WIRING TO BE PROVIDED BY ELECTRICAL CONTRACTOR.
20. FIRE PROTECTION SHOP DRAWINGS, HYDRAULIC CALCULATIONS, AND MATERIAL DATA SUBMITTALS ARE TO BE SUBMITTED TO THE ARCHITECT AND ENGINEER OF RECORD FOR REVIEW AND APPROVAL.
21. THE INTENT, AND EXTENT, OF THIS SYSTEM DESIGN IS AS ILLUSTRATED, BUT IS DIAGRAMMATIC ONLY. IT IS THE RESPONSIBILITY OF THE FIRE SPRINKLER CONTRACTOR TO ASSEMBLE A SET OF DRAWINGS DEPICTING THE ACTUAL PIPING CONFIGURATION FOR EACH BUILDING IN ITS ENTIRETY PRIOR TO SUBMITTAL TO ENGINEER OF RECORD FOR REVIEW. HYDRAULIC CALCULATIONS ARE PROVIDED TO VERIFY THE ADEQUACY OF THE WATER SUPPLY. THE SPRINKLER CONTRACTOR SHALL PROVIDE A SET OF HYDRAULIC CALCULATIONS FOR EACH BUILDING TYPE USING A FLOW TEST CURRENT TO WITHIN SIX MONTHS.
22. CORROSION PROTECTION FOR ALL UNDERGROUND BOLTED JOINT ACCESSORIES SHALL BE CLEANED AND THOROUGHLY COATED WITH ASPHALT OR OTHER CORROSION-RETARDING MATERIAL AFTER INSTALLATION IN ACCORDANCE WITH NFPA 13 SECTION 10.3.6.2.
23. THE UNDERGROUND MAIN STARTING AT THE PUBLIC WATER UTILITY POINT OF CONNECTION HAS BEEN DESIGNED TO NFPA 24. INSTALLATION AND TESTING MUST BE IN ACCORDANCE WITH NFPA 24.
24. ALL TEES, PLUGS, CAPS, BENDS, REDUCERS, VALVES, AND HYDRANT BRANCHES SHALL BE RESTRAINED AGAINST MOVEMENT BY USING THRUST BLOCKS OR RESTRAINED JOINT SYSTEMS IN ACCORDANCE WITH NFPA 24.
25. ALL FIRE SPRINKLER COMPONENTS ARE TO BE RATED FOR THE MAXIMUM SYSTEM WORKING PRESSURE TO WHICH THEY ARE EXPOSED IN ACCORDANCE WITH NFPA 13.
26. THE COMPONENTS OF THE FIRE PROTECTION SYSTEM(S) FURNISHED UNDER THIS DIVISION OF THE SPECIFICATIONS SHALL BE GUARANTEED FOR A PERIOD OF ONE (1) YEAR FROM THE DATE OF ACCEPTANCE THEREOF, EITHER FOR BENEFICIAL USE OR FINAL ACCEPTANCE, WHICHEVER IS EARLIER, AGAINST DEFECTIVE MATERIALS, DESIGN, AND WORKMANSHIP. UPON RECEIPT OF NOTICE FROM THE ARCHITECT OF FAILURE OF ANY PART OF THE EQUIPMENT DURING THE GUARANTEE PERIOD, THE AFFECTED PART OR PARTS SHALL BE REPLACED PROMPTLY WHICH INCLUDES REMOVING THE DEFECTIVE PART OR PARTS, REPLACING AND INSTALLING THE NEW PART OR PARTS AND AT THE EXPENSE OF THE CONTRACTOR.
27. CPVC PIPING SHALL BE COMPATIBLE WITH ANTI-MICROBIAL COATED BLACK STEEL FIRE SPRINKLER PIPE. TESTING HAS SHOWN THAT CERTAIN ANTI-MICROBIAL COATING PRODUCTS CAN BE COMPATIBLE WITH CPVC PIPING. HOWEVER, THE POTENTIAL FOR COMPATIBILITY PROBLEMS CAN BE PRESENT IN INSTALLATIONS WHERE CPVC MATERIALS ARE HIGHLY STRESSED.
28. SPRINKLER PROTECTION SHALL BE PROVIDED FOR EXTERIOR BALCONIES, DECKS AND GROUND FLOOR PATIOS OF DWELLING UNITS WHERE THE BUILDING IS OF TYPE V CONSTRUCTION, PROVIDED THERE IS A ROOF OR DECK ABOVE. SIDEWALL SPRINKLERS THAT ARE USED TO PROTECT SUCH AREAS SHALL BE PERMITTED TO BE LOCATED SUCH THAT THEIR DEFLECTORS ARE WITHIN 1 INCH TO 6 INCHES BELOW THE STRUCTURAL MEMBERS AND A MAXIMUM DISTANCE OF 14 INCHES BELOW THE DECK OF THE EXTERIOR BALCONIES AND DECKS THAT ARE CONSTRUCTED OF OPEN WOOD JOIST CONSTRUCTION.
29. THE FIRE SPRINKLER CONTRACTOR SHALL PREPARE DETAILED WORKING PLANS IN ACCORDANCE WITH NFPA 13R, NFPA 14 THE FIRE PROTECTION SYSTEM LAYOUT SHALL FOLLOW THE DESIGN GUIDELINES SET FORTH IN THESE FIRE PROTECTION SYSTEM ENGINEERING DOCUMENTS.
30. THE FIRE SPRINKLER CONTRACTOR SHALL OBTAIN THE ACCEPTANCE TESTS FROM THE LOCAL AUTHORITY. THE ACCEPTANCE TEST FOR THE OVERHEAD SPRINKLER SYSTEM PIPING SHALL BE IN ACCORDANCE WITH NFPA 13R CHAPTER 10 USING THE MATERIAL AND TEST CERTIFICATE FOR ABOVEGROUND PIPING IN FIGURE 10.1.2. THE ACCEPTANCE TEST FOR THE UNDERGROUND PIPING SHALL BE IN ACCORDANCE WITH NFPA 13 CHAPTER 10, SECTION 10.10 USING THE MATERIAL AND TEST CERTIFICATE FOR UNDERGROUND PIPING IN FIGURE 10.10.1.
31. THE POINT OF SERVICE IS INDICATED AT THE SYSTEM SIDE OF THE BACKFLOW PREVENTER. AT THIS POINT, THE SYSTEM IS DEDICATED SOLELY FOR FIRE PROTECTION PURPOSES. NO DOMESTIC WATER SHALL BE TAKEN FROM THE SYSTEM BEYOND THIS POINT FOR OTHER PURPOSES.
32. CLASSIFICATIONS OF HAZARD OCCUPANCIES FOR THE AREAS OF DESIGN SHALL BE AS FOLLOWS: (RESIDENTIAL FLOORS) RESIDENTIAL OCCUPANCY PER NFPA 13R.
33. THE SPRINKLER SYSTEM SHALL BE WET PIPE FOR THE RESIDENTIAL FLOORS, WITH THE REMOTE AREA USING ALL SPRINKLERS WITHIN A COMPARTMENT, UP TO A MAXIMUM OF 4 SPRINKLERS, THAT REQUIRE THE GREATEST HYDRAULIC DEMAND, TO MEET OR EXCEED THE REQUIREMENTS OF NFPA 13R, AND LOCAL AUTHORITIES. SPRINKLERS SHALL HAVE A MINIMUM TEMPERATURE RATING OF 155° AND THE SPACING SHALL BE PER NFPA 13R OR MANUFACTURERS LISTING.
34. SEE CIVIL UTILITIES PLAN FOR WATER SUPPLY PIPING LOCATIONS.
35. IF THE FLOW TEST BECOMES GREATER THAN SIX (6) MONTHS OLD BY THE TIME OF FIRE SPRINKLER PERMIT SUBMITTAL, A NEW TEST SHALL BE OBTAINED BY THE FIRE SPRINKLER CONTRACTOR.
36. VALVE AND ALARM REQUIREMENTS: ALL CONTROL VALVES ON SPRINKLER RISERS AND FIRE PROTECTION BACKFLOW PREVENTERS SHALL HAVE A TAMPER SWITCH. THE FLOW SWITCH SHALL BE SET TO NOT ALARM WITH MINOR CITY WATER PRESSURE FLUCTUATIONS, HOWEVER, THE FLOW OF ONE SPRINKLER HEAD SHALL PRODUCE AN ALARM CONDITION BY TRIPPING THE FLOW SWITCH. ALL FLOW AND TAMPER SWITCHES SHALL BE CONNECTED TO THE BUILDING FIRE ALARM PANEL. FLOW SWITCHES SHALL ALSO SOUND THE ELECTRIC ALARM BELL ON THE OUTSIDE WALL. FIRE SPRINKLER CONTRACTOR SHALL VERIFY AND TEST PER NFPA 13.
37. THE LOCAL WATER PURVEYOR IS REQUESTED TO ADVISE THE ENGINEER OF RECORD IF CONDITIONS EXIST IN THEIR WATER SUPPLY THAT COULD LEAD TO MIC, SO THAT THE ENGINEER CAN DESIGN CORRECTIVE MEASURES. THERE ARE NO KNOWN MIC CONDITIONS IN THE LOCAL WATER SUPPLY.
38. BACKFLOW PREVENTER AND METERING SPECIFICATIONS SHALL MEET OR EXCEED REQUIREMENTS OF THE LOCAL JURISDICTION.
39. YARD AND INTERIOR FIRE PROTECTION COMPONENTS: PRODUCT DATA SHEETS SHALL BE SUBMITTED BY THE SPRINKLER CONTRACTOR ALONG WITH THEIR SHOP DRAWINGS. ALL FIRE PROTECTION DEVICES AND COMPONENTS SHALL BE UL LISTED AND FM APPROVED.

FIRE SERVICE PIPE MATERIAL & TESTING NOTES

1. ALL PRIVATE FIRE SERVICE MAINS/LINES LOCATED DOWNSTREAM OF THE POINT OF SERVICE SHALL BE INSTALLED BY A QUALIFIED AND LICENSED CONTRACTOR CLASS I, II, OR V WITH 3' MINIMUM COVER. CONSTRUCTION SHALL COMPLY WITH ALL APPLICABLE FIRE CODES. CONTRACTOR TO VERIFY REQUIREMENTS BEFORE START OF CONSTRUCTION. COMBINATION MAINS (SHARED DOMESTIC AND FIRE SUPPRESSION SERVICE) UP TO THE DEDICATED FIRE SUPPRESSION SYSTEM POINT OF SERVICE CAN BE INSTALLED BY A LICENSED UNDERGROUND EXCAVATION OR SITE UTILITY CONTRACTOR.
2. POINT OF SERVICE IS TO BE DESIGNATED FOR ALL BUILDINGS EQUIPPED WITH AUTOMATIC SPRINKLER SYSTEM.
3. THE UNDERGROUND MAIN STARTING AT THE PUBLIC WATER UTILITY POINT OF CONNECTION HAS BEEN DESIGNED TO NFPA 24. MATERIALS, INSTALLATION AND TESTING MUST BE IN ACCORDANCE WITH NFPA 24.
4. ALL NEW PRIVATE FIRE SERVICE MAINS/LINES AND HYDRANTS SHALL BE FLUSHED AND HYDROSTATIC TESTED TO 200 PSI FROM THE POINT OF SERVICE AS PER NFPA 24 CHAPTER 9.
5. THE UNDERGROUND MAIN STARTING AT THE POINT OF SERVICE HAS BEEN DESIGNED TO NFPA 24.
6. FIRE SERVICE MAINS/LINES SHALL BE POLYVINYL CHLORIDE PRESSURE PIPE CONFORMING TO AWWA C900 WITH DIMENSION RATIO (DR) OF EIGHTEEN (18) AND A MINIMUM PRESSURE CLASS OF TWO HUNDRED POUNDS PER SQUARE INCH (200 P.S.I.) UNLESS NOTED OTHERWISE.

F.A.C. 61G15

THE CONTRACTOR'S FIRE PROTECTION ENGINEER, AS THE "DELEGATED ENGINEER" SHALL BE THE "ENGINEER OF "RECORD" FOR THE FIRE PROTECTION SYSTEM AND SHALL PREPARE COMPLETE AND FINAL FIRE PROTECTION DESIGN DOCUMENTS WITH THE HYDRAULIC CALCULATIONS, SIGNED AND SEALED, AS DEFINED BT THE F.A.C. 61G15 AND SHALL SUBMIT REQUIRED DOCUMENTATION TO THE ARCHITECT FOR REVIEW BY THIER "PRIME PROFESSIONAL ENGINEER" CONSULTANT TO REVIEW FOR BASIC DESIGN CRITERIA. UPON APPROVAL THE CONTRACTOR SHALL SUBMIT SIGNED AND SEALED DOCUMENTS TO THE AHJ FOR REVIEW AND APPROVAL.

61G15-32.004 DESIGN OF WATER BASED FIRE PROTECTION SYSTEMS

1. DESIGN FOR APARTMENT BUILDINGS IS WATER BASED FIRE PROTECTION SYSTEM WHICH INCLUDES A WET AUTOMATIC FIRE SPRINKLER SYSTEM CONSISTING OF FIRE WATER SPRINKLER MAINS, BRANCH LINES, FIRE SPRINKLER HEADS AND HANGER DEVICES CONNECTED TO A DEDICATED FIRE PROTECTION WATER SOURCE.
2. THESE FIRE PROTECTION SYSTEM ENGINEERING DOCUMENTS INCLUDE AS A MINIMUM THE FOLLOWING APPLICABLE INFORMATION, UNLESS NOTED OTHERWISE AS NOT APPLICABLE:
    A. THE POINT OF SERVICE (P.O.S) FOR THE FIRE PROTECTION WATER SUPPLY AS DEFINED BY SECTION 633.021(18), F.S. WHERE PIPING IS DEDICATED SOLELY FOR FIRE PROTECTION USE IS SHOWN ON CIVIL PLANS.
    B. APPLICABLE NFPA STANDARD TO BE APPLIED IS NFPA-13R AND NFPA-14, 2010 EDITION.
    C. CLASSIFICATION OF HAZARD OCCUPANCY FOR EACH ROOM OR AREA AS DEFINED IN NFPA-13 IS AS FOLLOWS: LIVING UNITS AND RELATED AREAS ARE LIGHT HAZARD OCCUPANCY.
    D. DESIGN APPROACH IS A WET SYSTEM TYPE. DESIGN DENSITIES ARE 0.10 GPM/SQUARE FOOT OVER THE MOST HYDRAULICALLY DEMANDING AREA OR WITH A MAXIMUM OF 4 HEADS FLOWING FOR LIGHT HAZARD OCCUPANCIES. FIRE SPRINKLER DEVICE TEMPERATURE RATING SHALL BE NOMINAL 165 DEGREES F., ORDINARY TEMPERATURE RATING CLASSIFICATION, UNLESS NOTED OTHERWISE.
    E. CHARACTERISTICS OF EXISTING WATER SUPPLY TO BE USED ARE MAINS SHOWN ON CIVIL SITE UTILITY PLANS.
    F. FIRE HYDRANT FLOW TEST CONDUCTED OFF THE EXISTING PUBLIC WATER SUPPLY IS INTENDED TO BE USED FOR VERIFICATION OF SELECTED FINAL PIPE SIZES.

LOCATION:	HWY 192 & SUMMER BAY APTS.
STATIC PRESSURE:	68 PSI
RESIDUAL PRESSURE:	56 PSI
FLOW AT TEST:	1130
DATE:	07/22/16 @ 8:50 A.M.
BY:	WAYNE' AUTOMATIC SPRINKLER

    G. VALVING AND ALARM REQUIREMENTS TO MINIMIZE POTENTIAL FOR IMPAIRMENTS AND UNRECOGNIZED FLOW OF WATER ARE PROVIDED BY SUPERVISORY VALVE TAMPER SWITCHES INSTALLED ON INTERIOR SHUT-OFF VALVES. WATER FLOW ALARM IS SIGNALED BY WATER FLOW SWITCH SHOWN ON FIRE SPRINKLER RISER DETAIL.
    H. FAMILIARITY WITH CONDITIONS IN THE LOCAL AREA INDICATE WATER SUPPLIES DO NOT RESULT IN MICROBIAL INDUCED CORROSION (MIC). THE FIRE SPRINKLER CONTRACTOR SHALL MAKE REASONABLE EFFORTS TO IDENTIFY WATER SUPPLIES THAT COULD LEAD TO MICROBIAL INDUCED CORROSION (MIC). ADDITIONAL EFFORTS MAY CONSIST OF DISCUSSIONS WITH THE LOCAL WATER PURVEYOR AND/OR FIRE OFFICIAL OR LABORATORY TESTING OF WATER SUPPLIES. WHEN CONDITIONS ARE FOUND THAT MAY RESULT IN MIC CONTAMINATION OF THE FIRE PROTECTION PIPING, CORRECTIVE MEASURES SHALL BE TAKEN.
    I. LOCATION OF CHECK BACKFLOW PREVENTER IS LOCATED IN THE RISER.
    J. QUALITY AND PERFORMANCE SPECIFICATIONS OF ALL EXTERIOR YARD FIRE PROTECTION COMPONENTS SUCH AS FIRE HYDRANT ASSEMBLIES AND THEIR LOCATIONS ARE SHOWN ON CIVIL SITE UTILITY PLANS. QUALITY AND PERFORMANCE SPECIFICATIONS OF ALL INTERIOR FIRE PROTECTION COMPONENTS ARE SHOWN ON FIRE PROTECTION DRAWING SHEET.
    K. FIRE PUMP TO SATISFY SYSTEM PRESSURE FOR APARTMENT BUILDINGS IS NOT ANTICIPATED TO BE REQUIRED.
    L. FIREWATER STORAGE TANK TO SATISFY SYSTEM VOLUME FOR APARTMENT BUILDINGS IS NOT ANTICIPATED TO BE REQUIRED.

DESIGN HAZARD SCHEDULE

APARTMENTS UNITS
THE SPRINKLER SYSTEM SHALL BE 13R WET PIPE FOR THE RESIDENTIAL FLOORS, WITH THE REMOTE AREA USING ALL SPRINKLERS WITHIN A COMPARTMENT, UP TO A MAXIMUM OF 4 SPRINKLERS, THAT REQUIRE THE GREATEST HYDRAULIC DEMAND, TO MEET OR EXCEED THE REQUIREMENTS OF NFPA 13R, 2010 EDITION, AND LOCAL AUTHORITIES. SPRINKLERS SHALL HAVE A MINIMUM TEMPERATURE RATING OF 155° AND THE SPACING SHALL BE PER NFPA 13R.

CLUBHOUSE, OFFICE SPACE

OCCUPANCY CLASSIFICATION:	LIGHT HAZARD, NFPA 13
SYSTEM TYPE:	WET
DESIGN DENSITY:	0.10 GPM/SQ. FT.
HYDRAULIC AREA OF APPLICATION:	MOST REMOTE 1,500 Sq.ft.
MAXIMUM HEAD COVERAGE:	225 sq.ft.
TEMPERATURE RATING:	165 DEGREES FAHRENHEIT U.N.O.
HOSE STREAM ALLOWANCE:	100 GPM
DURATION:	30 MINUTES

STORAGE SPACE, MECHANICAL ROOMS

OCCUPANCY CLASSIFICATION:	ORDINARY HAZARD GRP-1, NFPA 13
SYSTEM TYPE:	WET
DESIGN DENSITY:	0.15 GPM/SQ. FT.
HYDRAULIC AREA OF APPLICATION:	MOST REMOTE 1,500 Sq.ft.
MAXIMUM HEAD COVERAGE:	130 SQ. FT.
TEMPERATURE RATING:	165 DEGREES FAHRENHEIT U.N.O.
HOSE STREAM ALLOWANCE:	250 GPM
DURATION:	60 TO 90 MINUTES

RETAIL SPACE, RETAIL SHELL

OCCUPANCY CLASSIFICATION:	ORDINARY HAZARD GRP-2, NFPA 13
SYSTEM TYPE:	WET
DESIGN DENSITY:	0.20 GPM/SQ. FT.
HYDRAULIC AREA OF APPLICATION:	MOST REMOTE 1,500 Sq.ft.
MAXIMUM HEAD COVERAGE:	130 SQ. FT.
TEMPERATURE RATING:	165 DEGREES FAHRENHEIT U.N.O.
HOSE STREAM ALLOWANCE:	250 GPM
DURATION:	60 TO 90 MINUTES

PERMIT REVIEW STAMP

ISSUE HISTORY

No.	Date	Description
1	10/06/2017	COORDINATION SET
2	11/10/2017	75%-90% REVIEW COORD. SET

REVISION HISTORY

No.	Date	Description

© 2015 These documents and their contents are the property of FUGLEBERG KOCH, P.L.C. LA0001220 and are issued only for the specific project noted on these drawings. Any reproductions, revisions, or modifications of these documents without the expressed written consent of Fugleberg Koch, P.L.C. is prohibited by law.

FUGLEBERG KOCH
2555 Temple Trail, Winter Park, FL 32789 (407) 629-0595
www.fuglebergkoch.com BR569

CONSULTANT
Joseph, Lawrence & Co
Consulting Engineers
1180 HARWOOD AVE. SUITE 3000
ALTAMONTE SPRINGS, FLORIDA 32714
TEL: 321.972.4466
WWW.JLCENG.COM
CA NO. 28730

JLC 17.0137.00

Adam Joseph Barney
P.E. #:69124

SUMMER BAY APTS. II
LAKE COUNTY, FL

Drawn:	MJR/KCM
Checked:	BLS/AJB
Approval:	BLS/AJB
Date:	11/10/2017
Project #:	5389

SYMBOL LEGEND & GENERAL NOTES - FIRE PROTECTION

FP0.01

REFERENCE NOTES: (X)

1. SPRINKLER RISER UP TO UNITS ABOVE.
2. STANDPIPE UP.
3. 2½" FROM STANDPIPE CONNECT TO 2½" FIRE HOSE VALVE LOCATED WITHIN RECESSED FIRE HOSE VALVE CABINET.
4. STANDPIPE ISOLATION SHUT-OFF VALVE WITH VALVE TAMPER SWITCH.
5. FIRE SPRINKLER RISER, SEE DETAIL.
6. FIRE PROTECTION SUPPLY PIPING LOCATED BELOW GRADE, FOR CONTINUATION SEE CIVIL SITE UTILITY PLANS.
7. SPRINKLER PIPING TO SPRINKLER COVERAGE FOR GARAGES.
8. FLOOR CONTROL VALVE ASSEMBLY, SEE DETAIL.
9. FREEZE PROTECT PIPING TO MAINTAIN 40° DEG. F.

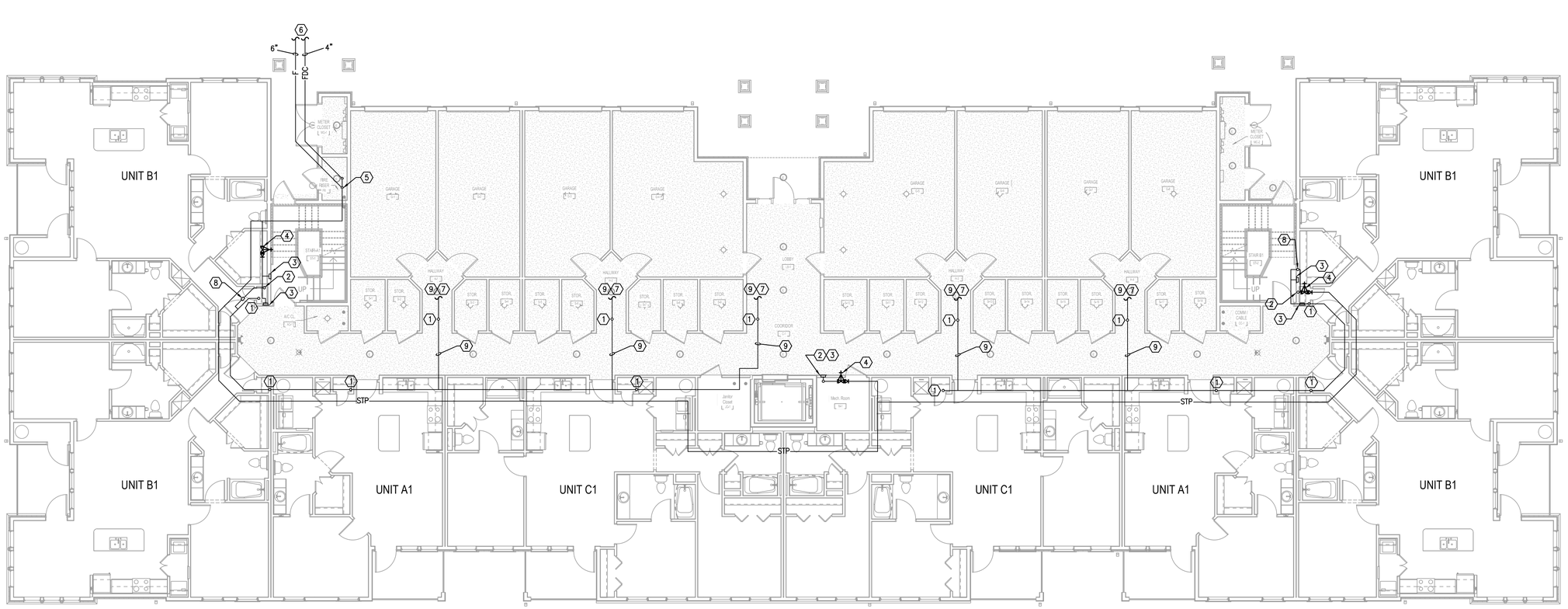

H1 BUILDING TYPE 1 - GROUND LEVEL - FIRE PROTECTION
1/8" = 1'-0"

PERMIT REVIEW STAMP

ISSUE HISTORY

No.	Date	Description
1	10/06/2017	COORDINATION SET
2	11/10/2017	75%-90% REVIEW COORD. SET

REVISION HISTORY

No.	Date	Description

© 2015 These documents and their contents are the property of FUGLEBERG KOCH, PLLC - AA26002103, and are issued only for the specific project noted on these drawings. Any reproductions, revisions, or modifications of these documents without the expressed written consent of Fugleberg Koch, PLLC is prohibited by law.

FUGLEBERG KOCH
2555 Temple Trail, Winter Park, FL 32789 (407) 629-0595
www.fuglebergkoch.com BR569

CONSULTANT
Joseph, Lawrence & Co
Consulting Engineers
1180 HARWOOD AVE. SUITE 3000
ALTAMONTE SPRINGS, FLORIDA 32714
TEL: 321.972.4466
WWW.JLCENG.COM
CA NO. 28730

JLC 17.0137.00

Adam Joseph Barney
P.E. #:69124

SUMMER BAY APTS. II
LAKE COUNTY, FL

Drawn:	MJR/KCM
Checked:	BLS/AJB
Approval:	BLS/AJB
Date:	11/10/2017
Project #:	5389

BUILDING TYPE 1 - GROUND FLOOR PLAN - FIRE PROT.

FP2.01

REFERENCE NOTES: ⟨X⟩

⟨1⟩ SPRINKLER RISER LOCATED WITHIN WALL.

⟨2⟩ STANDPIPE LOCATED WITHIN WALL.

⟨3⟩ 2½" FROM STANDPIPE CONNECT TO 2½" FIRE HOSE VALVE LOCATED WITHIN RECESSED FIRE HOSE VALVE CABINET.

⟨4⟩ ALTHOUGH NOT SHOWN, PROVIDE SPRINKLER COVERAGE FOR CORRIDORS.

⟨5⟩ STANDPIPE UP.

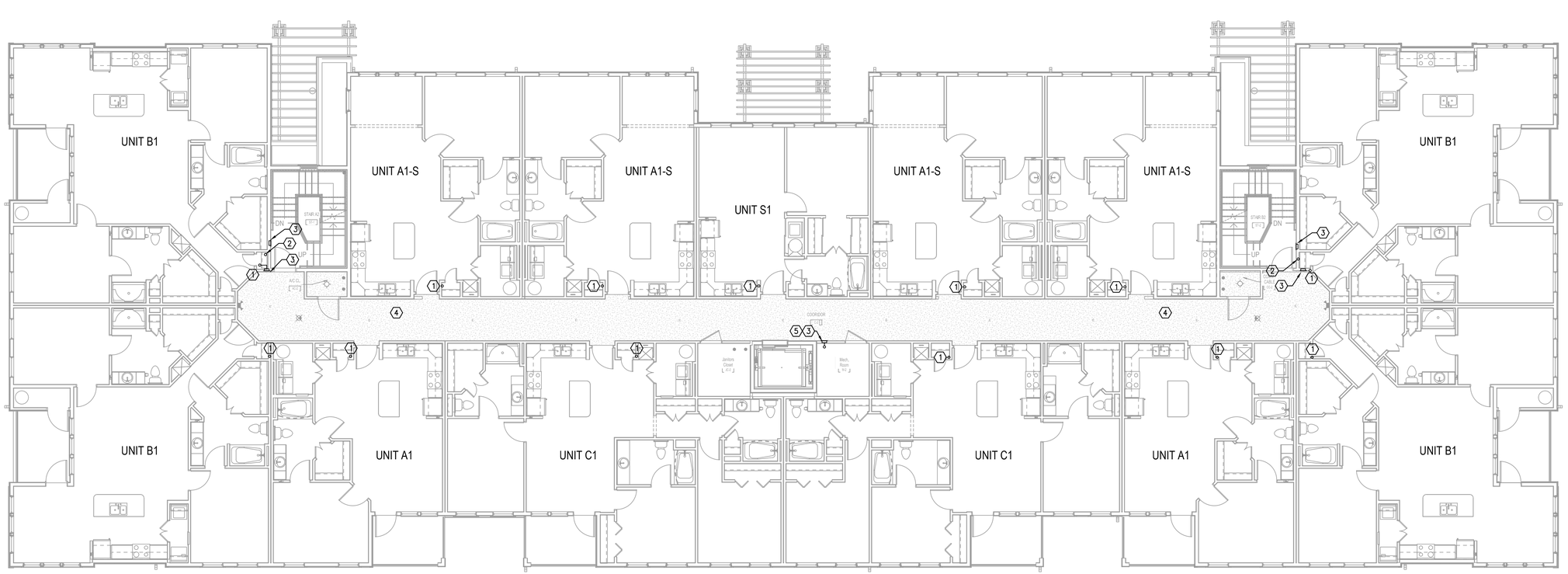

H1 BUILDING TYPE 1 - LEVEL 2 - FIRE PROTECTION
1/8" = 1'-0"

PERMIT REVIEW STAMP

ISSUE HISTORY

No.	Date	Description
1	10/06/2017	COORDINATION SET
2	11/10/2017	75%-90% REVIEW COORD. SET

REVISION HISTORY

No.	Date	Description

© 2015 These documents and their contents are the property of FUGLEBERG KOCH, P.L.C. • ARCHITECTS and are issued only for the specific project noted on these drawings. Any reproductions, revisions, or modifications of these documents without the expressed written consent of Fugleberg Koch, P.L.C. is prohibited by law.

FUGLEBERG KOCH
2555 Temple Trail, Winter Park, FL 32789 (407) 629-0595
www.fuglebergkoch.com BR569

CONSULTANT
Joseph, Lawrence & Co Consulting Engineers
1180 HARWOOD AVE. SUITE 3000
ALTAMONTE SPRINGS, FLORIDA 32714
TEL: 321.972.4466
WWW.JLCENG.COM
CA NO. 28730

JLC 17.0137.00

Adam Joseph Barney
P.E. #:69124

SUMMER BAY APTS. II
LAKE COUNTY, FL

Drawn:	MJR/KCM
Checked:	BLS/AJB
Approval:	BLS/AJB
Date:	11/10/2017
Project #:	5389

BUILDING TYPE 1 - LEVEL 2 PLAN - FIRE PROT.

FP2.02

REFERENCE NOTES: ⟨X⟩

1. SPRINKLER RISER LOCATED WITHIN WALL.
2. STANDPIPE LOCATED WITHIN WALL.
3. 2½" FROM STANDPIPE CONNECT TO 2½" FIRE HOSE VALVE LOCATED WITHIN RECESSED FIRE HOSE VALVE CABINET.
4. ALTHOUGH NOT SHOWN, PROVIDE SPRINKLER COVERAGE FOR CORRIDORS.
5. STANDPIPE UP.

H1 BUILDING TYPE 1 - LEVEL 3 - FIRE PROTECTION
1/8" = 1'-0"

PERMIT REVIEW STAMP

ISSUE HISTORY

No.	Date	Description
1	10/06/2017	COORDINATION SET
2	11/10/2017	75%-90% REVIEW COORD. SET

REVISION HISTORY

No.	Date	Description

© 2015 These drawings and their contents are the property of FUGLEBERG KOCH, P.L.C. • ARCHITECTS and are issued only for the specific project noted on these drawings. Any reproductions, revisions, or modifications of these documents without the expressed written consent of Fugleberg Koch, P.L.C. is prohibited by law.

FUGLEBERG KOCH
2555 Temple Trail, Winter Park, FL 32789 (407) 629-0595
www.fuglebergkoch.com BR569

CONSULTANT
Joseph, Lawrence & Co
Consulting Engineers
1180 HARWOOD AVE. SUITE 3000
ALTAMONTE SPRINGS, FLORIDA 32714
TEL: 321.972.4466
WWW.JLCENG.COM
CA NO. 28730

JLC 17.0137.00

Adam Joseph Barney
P.E. #:69124

SUMMER BAY APTS. II
LAKE COUNTY, FL

Drawn:	MJR/KCM
Checked:	BLS/AJB
Approval:	BLS/AJB
Date:	11/10/2017
Project #:	5389

BUILDING TYPE 1 - LEVEL 3
PLAN - FIRE PROT.

FP2.03

REFERENCE NOTES: (X)

1. SPRINKLER RISER LOCATED WITHIN WALL.
2. STANDPIPE LOCATED WITHIN WALL.
3. 2½" FROM STANDPIPE CONNECT TO 2½" FIRE HOSE VALVE LOCATED WITHIN RECESSED FIRE HOSE VALVE CABINET.
4. ALTHOUGH NOT SHOWN, PROVIDE SPRINKLER COVERAGE FOR CORRIDORS.
5. STANDPIPE UP.

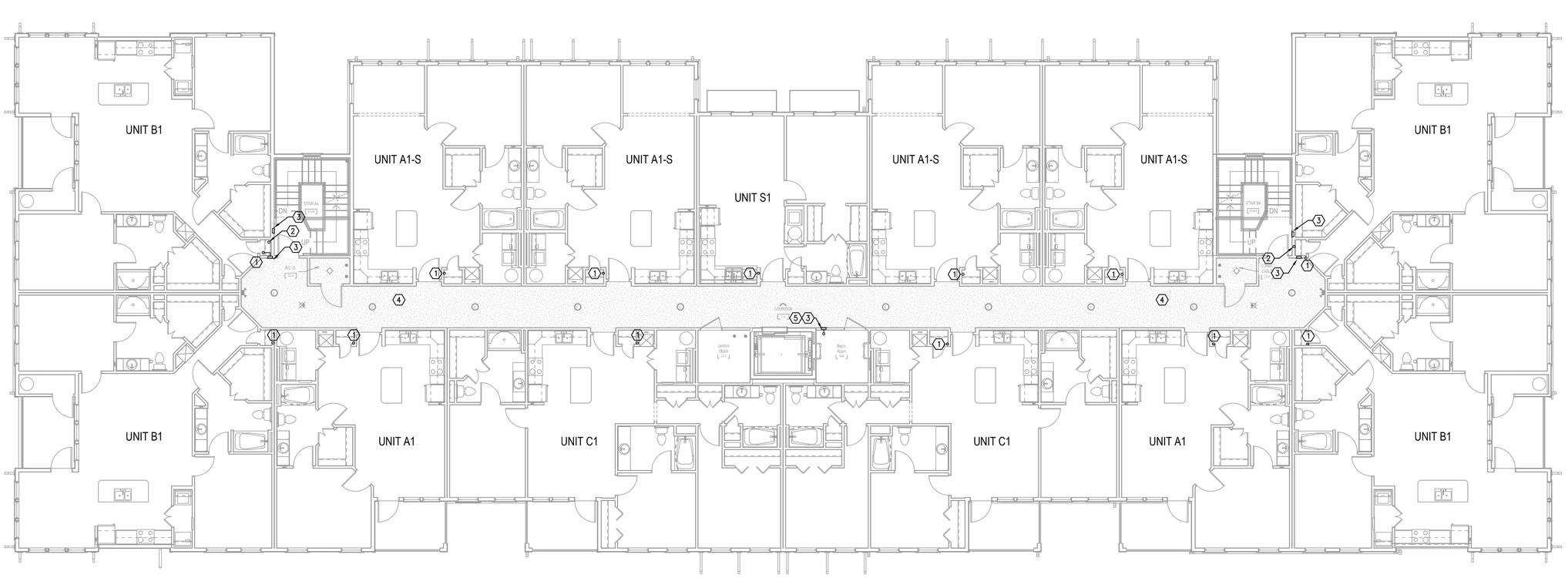

H1 BUILDING TYPE 1 - LEVEL 4 - FIRE PROTECTION
1/8" = 1'-0"

PERMIT REVIEW STAMP

ISSUE HISTORY

No.	Date	Description
1	10/06/2017	COORDINATION SET
2	11/10/2017	75%-90% REVIEW COORD. SET

REVISION HISTORY

No.	Date	Description

FUGLEBERG KOCH
2555 Temple Trail, Winter Park, FL 32789 (407) 629-0595
www.fuglebergkoch.com BR569

CONSULTANT
Joseph, Lawrence & Co
Consulting Engineers
1180 HARWOOD AVE. SUITE 3000
ALTAMONTE SPRINGS, FLORIDA 32714
TEL: 321.972.4466
WWW.JLCENG.COM
CA NO. 28730

JLC 17.0137.00

Adam Joseph Barney
P.E. #:69124

SUMMER BAY APTS. II
LAKE COUNTY, FL

Drawn:	MJR/KCM
Checked:	BLS/AJB
Approval:	BLS/AJB
Date:	11/10/2017
Project #:	5389

BUILDING TYPE 1 - LEVEL 4
PLAN - FIRE PROT.

FP2.04

© 2015 These documents and their contents are the property of FUGLEBERG KOCH, PLLC - AA26002103, and are issued only for the specific project noted on these drawings. Any reproductions, revisions, or modifications of these documents without the expressed written consent of Fugleberg Koch, PLLC is prohibited by law.

H1 BUILDING TYPE 1 - ROOF - FIRE PROTECTION
1/8" = 1'-0"

PERMIT REVIEW STAMP

ISSUE HISTORY

No.	Date	Description
1	10/06/2017	COORDINATION SET
2	11/10/2017	75%-90% REVIEW COORD. SET

REVISION HISTORY

No.	Date	Description

© 2015 These documents and their contents are the property of FUGLEBERG KOCH, P.L.C. • AA0002123 and are issued only for the specific project noted on these drawings. Any reproductions, revisions, or modifications of these documents without the expressed written consent of Fugleberg Koch, P.L.C. is prohibited by law.

FUGLEBERG KOCH
2555 Temple Trail, Winter Park, FL 32789 (407) 629-0595
www.fuglebergkoch.com BR569

CONSULTANT
Joseph, Lawrence & Co
Consulting Engineers
1180 HARWOOD AVE. SUITE 3000
ALTAMONTE SPRINGS, FLORIDA 32714
TEL: 321.972.4466
WWW.JLCENG.COM
CA NO. 28730

JLC 17.0137.00

Adam Joseph Barney
P.E. #:69124

SUMMER BAY APTS. II
LAKE COUNTY, FL

Drawn:	MJR/KCM
Checked:	BLS/AJB
Approval:	BLS/AJB
Date:	11/10/2017
Project #:	5389

BUILDING TYPE 1 - ROOF - FIRE PROTECTION

FP2.05

REFERENCE NOTES: (X)

1. SPRINKLER RISER UP TO UNITS ABOVE.
2. STANDPIPE UP.
3. 2½" FROM STANDPIPE CONNECT TO 2½" FIRE HOSE VALVE LOCATED WITHIN RECESSED FIRE HOSE VALVE CABINET.
4. STANDPIPE ISOLATION SHUT-OFF VALVE WITH VALVE TAMPER SWITCH.
5. FIRE SPRINKLER RISER, SEE DETAIL.
6. FIRE PROTECTION SUPPLY PIPING LOCATED BELOW GRADE, FOR CONTINUATION SEE CIVIL SITE UTILITY PLANS.
7. SPRINKLER PIPING TO SPRINKLER COVERAGE FOR GARAGES.
8. FLOOR CONTROL VALVE ASSEMBLY, SEE DETAIL.
9. FREEZE PROTECT PIPING TO MAINTAIN 40° DEG. F.

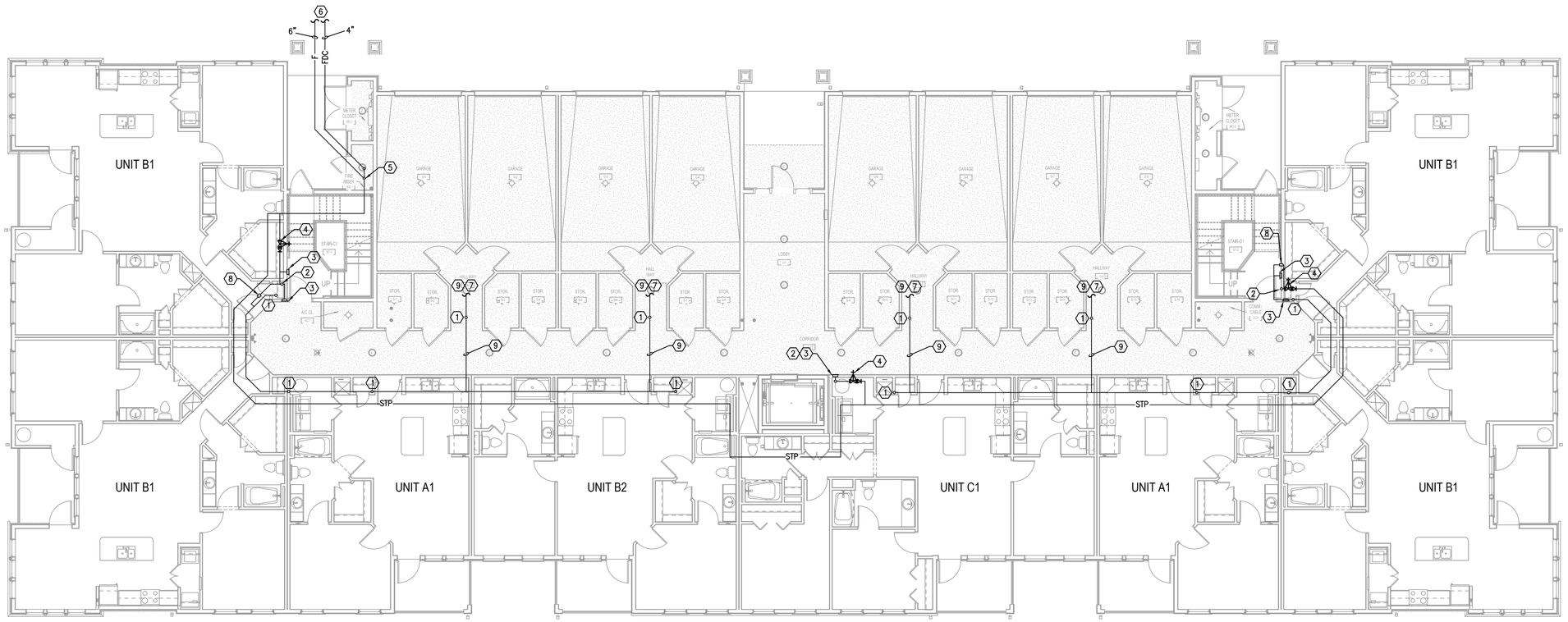

H1 BUILDING TYPE 2 - GROUND LEVEL - FIRE PROTECTION
1/8" = 1'-0"

PERMIT REVIEW STAMP

ISSUE HISTORY

No.	Date	Description
1	10/06/2017	COORDINATION SET
2	11/10/2017	75%-90% REVIEW COORD. SET

REVISION HISTORY

No.	Date	Description

© 2015 These documents and their contents are the property of FUGLEBERG KOCH, PLLC - AA26002103, and are issued only for the specific project noted on these drawings. Any reproductions, revisions, or modifications of these documents without the expressed written consent of Fugleberg Koch, PLLC is prohibited by law.

FUGLEBERG KOCH
2555 Temple Trail, Winter Park, FL 32789 (407) 629-0595
www.fuglebergkoch.com BR569

CONSULTANT
Joseph, Lawrence & Co
Consulting Engineers
1180 HARWOOD AVE. SUITE 3000
ALTAMONTE SPRINGS, FLORIDA 32714
TEL: 321.972.4466
WWW.JLCENG.COM
CA NO. 28730

JLC 17.0137.00

Adam Joseph Barney
P.E. #:69124

SUMMER BAY APTS. II
LAKE COUNTY, FL

Drawn:	MJR/KCM
Checked:	BLS/AJB
Approval:	BLS/AJB
Date:	11/10/2017
Project #:	5389

BUILDING TYPE 2 - GROUND FLOOR PLAN - FIRE PROT.

FP3.01

REFERENCE NOTES: (X)

1. SPRINKLER RISER LOCATED WITHIN WALL.
2. STANDPIPE LOCATED WITHIN WALL.
3. 2½" FROM STANDPIPE CONNECT TO 2½" FIRE HOSE VALVE LOCATED WITHIN RECESSED FIRE HOSE VALVE CABINET.
4. ALTHOUGH NOT SHOWN, PROVIDE SPRINKLER COVERAGE FOR CORRIDORS.
5. STANDPIPE UP.

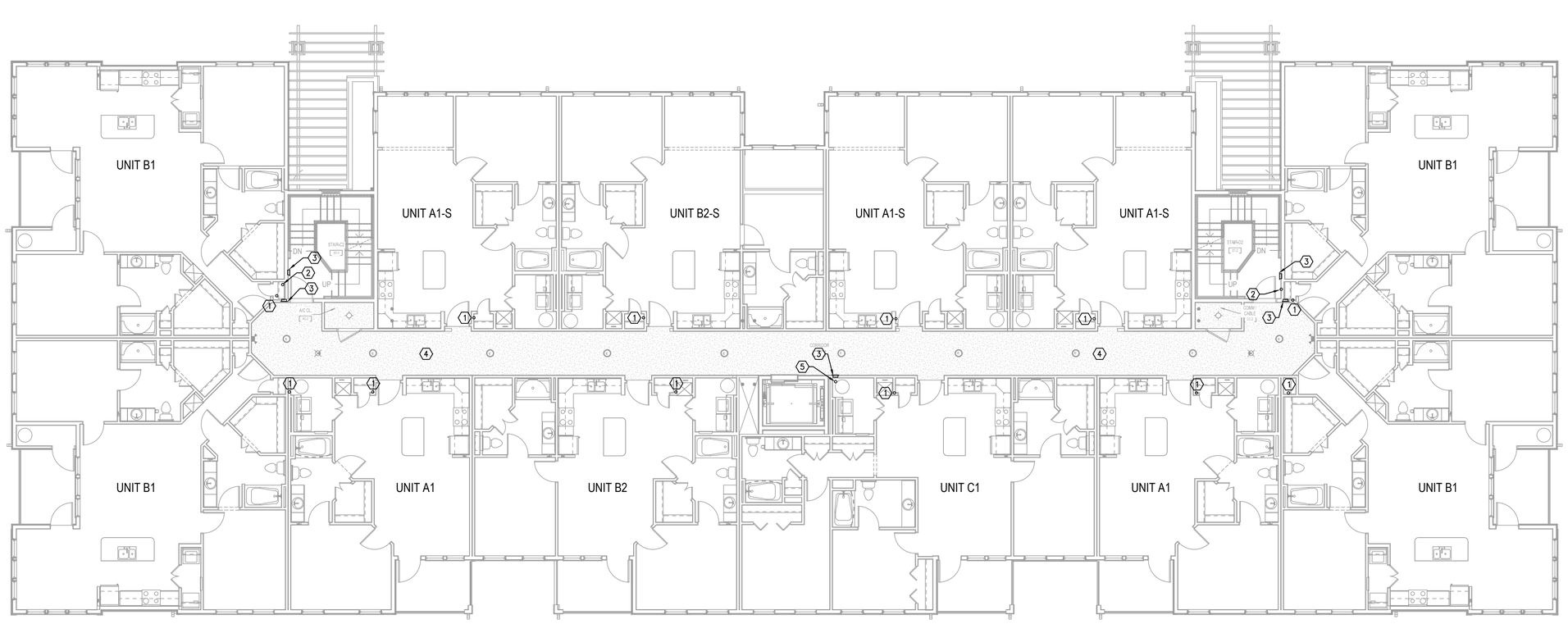

H1 BUILDING TYPE 2 - LEVEL 2 - FIRE PROTECTION
1/8" = 1'-0"

PERMIT REVIEW STAMP

ISSUE HISTORY

No.	Date	Description
1	10/06/2017	COORDINATION SET
2	11/10/2017	75%-90% REVIEW COORD. SET

REVISION HISTORY

No.	Date	Description

© 2015 These documents and their contents are the property of FUGLEBERG KOCH, PLLC - AA26002103, and are issued only for the specific project noted on these drawings. Any reproductions, revisions, or modifications of these documents without the expressed written consent of Fugleberg Koch, PLLC is prohibited by law.

FUGLEBERG KOCH
2555 Temple Trail, Winter Park, FL 32789 (407) 629-0595
www.fuglebergkoch.com BR569

CONSULTANT
Joseph, Lawrence & Co
Consulting Engineers
1180 HARWOOD AVE. SUITE 3000
ALTAMONTE SPRINGS, FLORIDA 32714
TEL: 321.972.4466
WWW.JLCENG.COM
CA NO. 28730

JLC 17.0137.00

Adam Joseph Barney
P.E. #:69124

SUMMER BAY APTS. II
LAKE COUNTY, FL

Drawn:	MJR/KCM
Checked:	BLS/AJB
Approval:	BLS/AJB
Date:	11/10/2017
Project #:	5389

BUILDING TYPE 2 - LEVEL 2 PLAN - FIRE PROT.

FP3.02

REFERENCE NOTES: ⟨X⟩

⟨1⟩ SPRINKLER RISER LOCATED WITHIN WALL.

⟨2⟩ STANDPIPE LOCATED WITHIN WALL.

⟨3⟩ 2½" FROM STANDPIPE CONNECT TO 2½" FIRE HOSE VALVE LOCATED WITHIN RECESSED FIRE HOSE VALVE CABINET.

⟨4⟩ ALTHOUGH NOT SHOWN, PROVIDE SPRINKLER COVERAGE FOR CORRIDORS.

⟨5⟩ STANDPIPE UP.

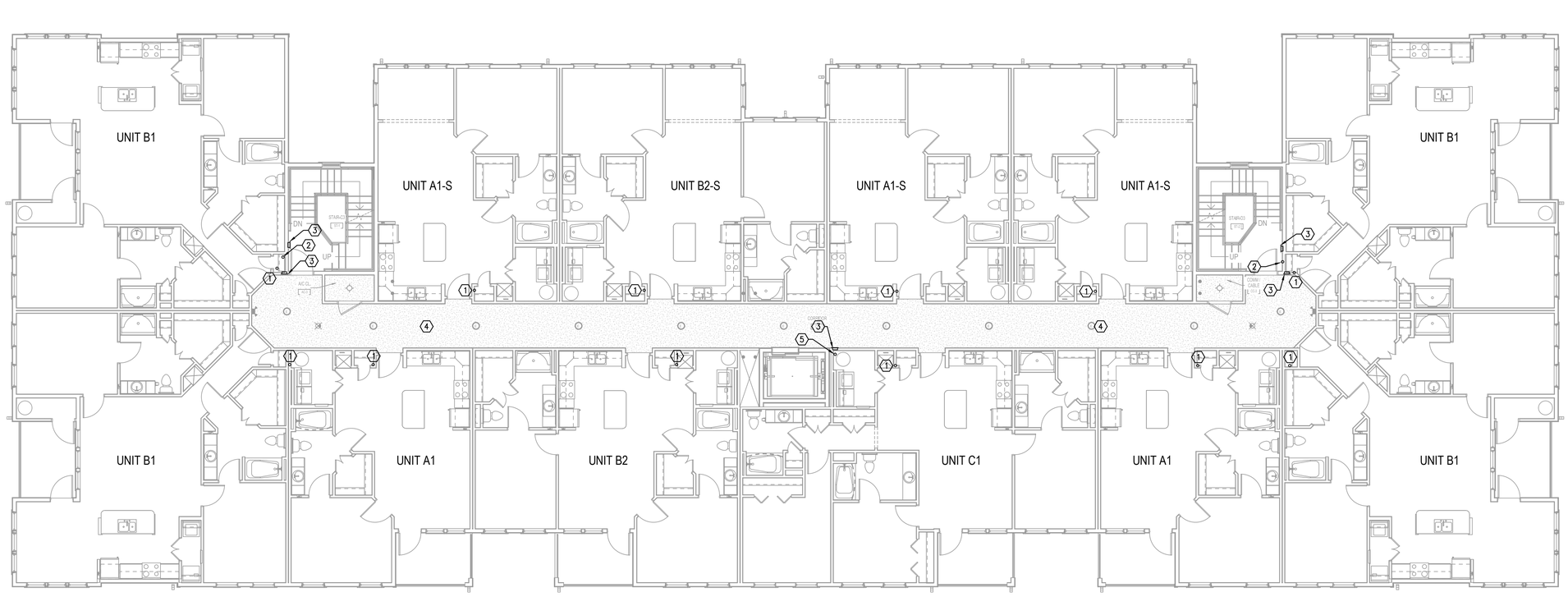

H1 BUILDING TYPE 2 - LEVEL 3 - FIRE PROTECTION
1/8" = 1'-0"

PERMIT REVIEW STAMP

ISSUE HISTORY

No.	Date	Description
1	10/06/2017	COORDINATION SET
2	11/10/2017	75%-90% REVIEW COORD. SET

REVISION HISTORY

No.	Date	Description

© 2015 These drawings and their contents are the property of FUGLEBERG KOCH, P.L.C. • ARCHITECTS and are issued only for the specific project noted on these drawings. Any reproductions, revisions, or modifications of these documents without the expressed written consent of Fugleberg Koch, P.L.C. is prohibited by law.

FUGLEBERG KOCH
2555 Temple Trail, Winter Park, FL 32789 (407) 629-0595
www.fuglebergkoch.com BR569

CONSULTANT

Joseph, Lawrence & Co
Consulting Engineers
1180 HARWOOD AVE. SUITE 3000
ALTAMONTE SPRINGS, FLORIDA 32714
TEL: 321.972.4466
WWW.JLCENG.COM
CA NO. 28730

JLC 17.0137.00

Adam Joseph Barney
P.E. #:69124

SUMMER BAY APTS. II
LAKE COUNTY, FL

Drawn:	MJR/KCM
Checked:	BLS/AJB
Approval:	BLS/AJB
Date:	11/10/2017
Project #:	5389

BUILDING TYPE 2 - LEVEL 3
PLAN - FIRE PROT.

FP3.03

REFERENCE NOTES: (X)

1. SPRINKLER RISER LOCATED WITHIN WALL.
2. STANDPIPE LOCATED WITHIN WALL.
3. 2½" FROM STANDPIPE CONNECT TO 2½" FIRE HOSE VALVE LOCATED WITHIN RECESSED FIRE HOSE VALVE CABINET.
4. ALTHOUGH NOT SHOWN, PROVIDE SPRINKLER COVERAGE FOR CORRIDORS.
5. STANDPIPE UP.

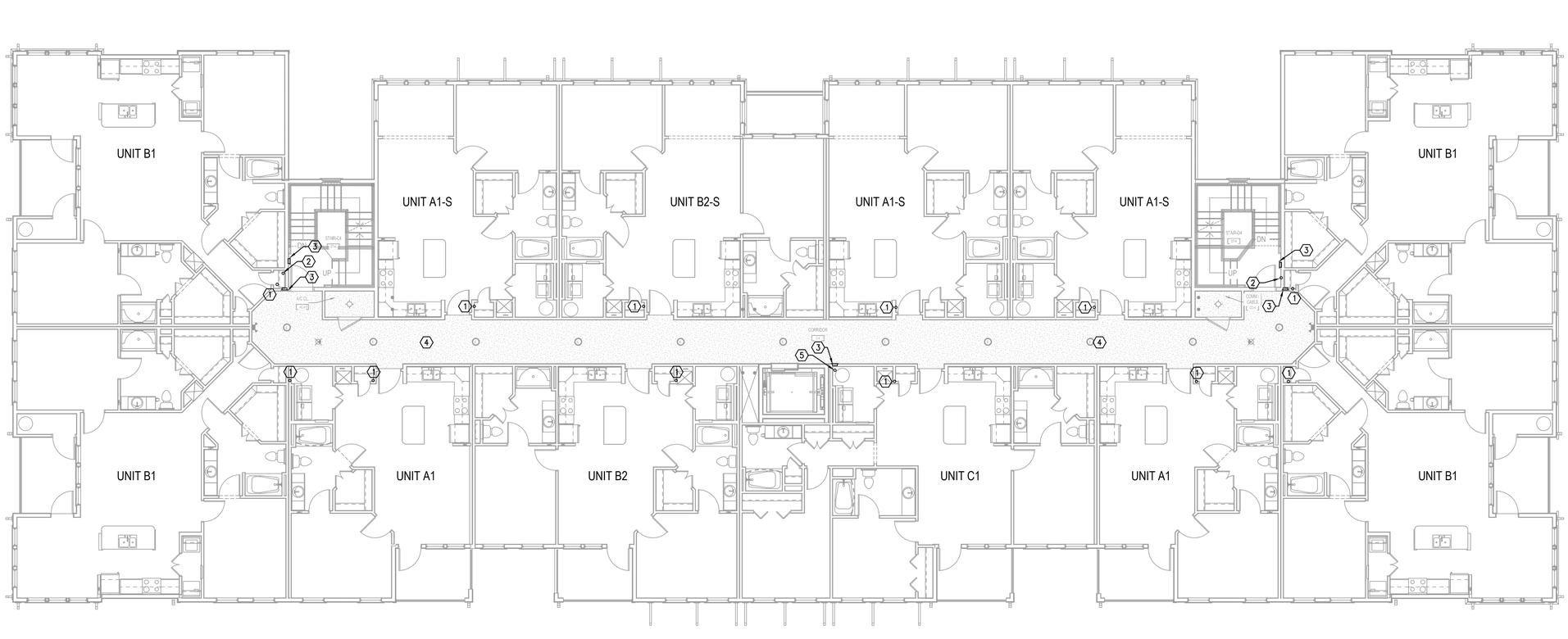

H1 BUILDING TYPE 2 - LEVEL 4 - FIRE PROTECTION
1/8" = 1'-0"

PERMIT REVIEW STAMP

ISSUE HISTORY

No.	Date	Description
1	10/06/2017	COORDINATION SET
2	11/10/2017	75%-90% REVIEW COORD. SET

REVISION HISTORY

No.	Date	Description

FUGLEBERG KOCH
2555 Temple Trail, Winter Park, FL 32789 (407) 629-0595
www.fuglebergkoch.com BR569

CONSULTANT
Joseph, Lawrence & Co
Consulting Engineers
1180 HARWOOD AVE. SUITE 3000
ALTAMONTE SPRINGS, FLORIDA 32714
TEL: 321.972.4466
WWW.JLCENG.COM
CA NO. 28730

JLC 17.0137.00

Adam Joseph Barney
P.E. #:69124

SUMMER BAY APTS. II
LAKE COUNTY, FL

Drawn:	MJR/KCM
Checked:	BLS/AJB
Approval:	BLS/AJB
Date:	11/10/2017
Project #:	5389

BUILDING TYPE 2 - LEVEL 4
PLAN - FIRE PROT.

FP3.04

© 2015 These documents and their contents are the property of FUGLEBERG KOCH, PLLC - AA26002103, and are issued only for the specific project noted on these drawings. Any reproductions, revisions, or modifications of these documents without the expressed written consent of Fugleberg Koch, PLLC is prohibited by law.

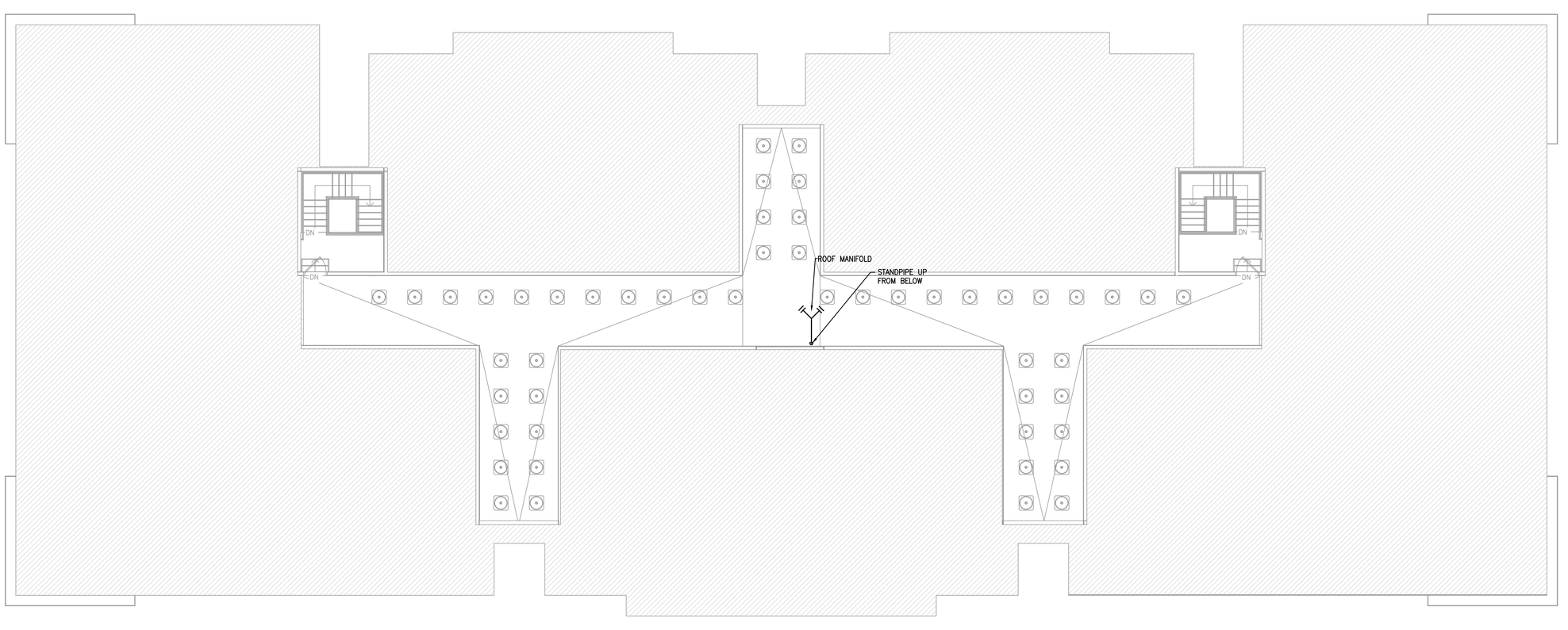

H1 BUILDING TYPE 2 - ROOF - FIRE PROTECTION
1/8" = 1'-0"

PERMIT REVIEW STAMP

ISSUE HISTORY

No.	Date	Description
1	10/06/2017	COORDINATION SET
2	11/10/2017	75%-90% REVIEW COORD. SET

REVISION HISTORY

No.	Date	Description

© 2015 These documents and their contents are the property of FUGLEBERG KOCH, P.L.C. • AA0002123 and are issued only for the specific project noted on these drawings. Any reproductions, revisions, or modifications of these documents without the expressed written consent of Fugleberg Koch, P.L.C. is prohibited by law.

FUGLEBERG KOCH
2555 Temple Trail, Winter Park, FL 32789 (407) 629-0595
www.fuglebergkoch.com BR569

CONSULTANT
Joseph, Lawrence & Co
Consulting Engineers
1180 HARWOOD AVE. SUITE 3000
ALTAMONTE SPRINGS, FLORIDA 32714
TEL: 321.972.4466
WWW.JLCENG.COM
CA NO. 28730

JLC 17.0137.00

Adam Joseph Barney
P.E. #:69124

SUMMER BAY APTS. II
LAKE COUNTY, FL

Drawn:	MJR/KCM
Checked:	BLS/AJB
Approval:	BLS/AJB
Date:	11/10/2017
Project #:	5389

BUILDING TYPE 2 - ROOF - FIRE PROTECTION

FP3.05

GENERAL NOTES:

A. SEE DESIGN HAZARD SCHEDULE SHEET FP0.01 FOR DETAILS OF ROOMS AND AREAS OCCUPANCY CLASSIFICATIONS AS DEFINED IN NFPA–13.

REFERENCE NOTES: ⟨X⟩

⟨1⟩ FIRE PROTECTION SUPPLY PIPING LOCATEED BELOW GRADE, FOR CONTINUATION SEE CIVIL SITE UTILITY PLANS.

⟨2⟩ FIRE SPRINKLER RISER, SEE DETAIL.

⟨3⟩ SPRINKLER MAIN TO WET PIPE SYSTEM.

⟨4⟩ DRY PIPE SYSTEM FROM DRY PIPE VALVE SERVING INTERMEDIATE TEMPERATURE CLASSIFICATION HEADS LOCATED WITHIN UNHEATED COMBUSTIBLE ROOF ATTIC SPACES.

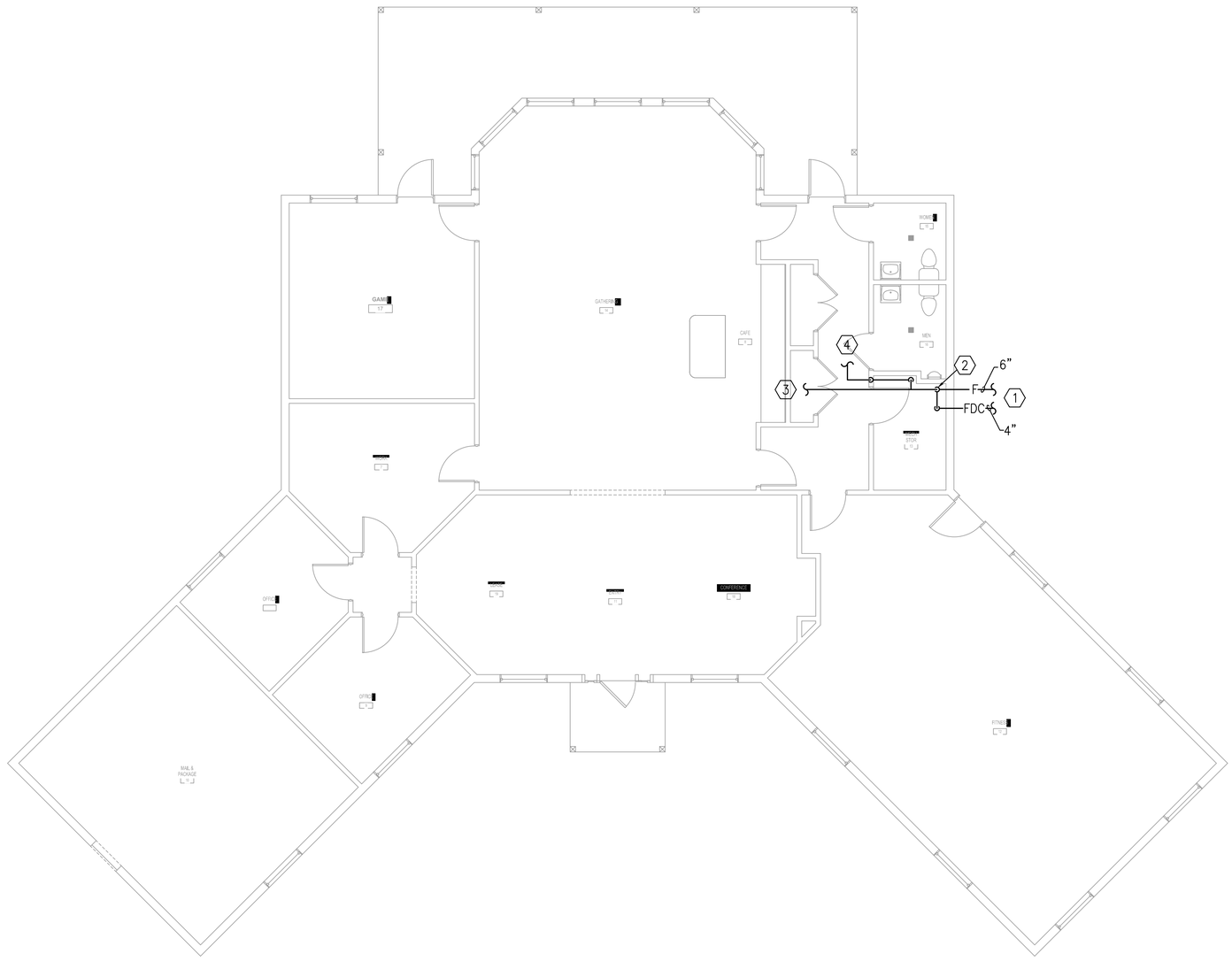

H1 CLUBHOUSE FLOOR PLAN - FIRE PROTECTION
3/16" = 1'-0"

PERMIT REVIEW STAMP

ISSUE HISTORY

No.	Date	Description
1	10/06/2017	COORDINATION SET
2	11/10/2017	75%-90% REVIEW COORD. SET

REVISION HISTORY

No.	Date	Description

© 2015 These documents and the ideas and designs incorporated in them, as instruments of service, are and shall remain the property of FUGLEBERG KOCH, P.L.C. +ADD0010 and are not to be used in any way for this specific project except by agreement in writing with FUGLEBERG KOCH, P.L.C. Visual contact with these documents shall constitute prima facie evidence of acceptance of these restrictions. Any unauthorized use, modifications of these documents without the expressed written consent of Fugleberg Koch, P.L.C. is prohibited by law.

FUGLEBERG KOCH
2555 Temple Trail, Winter Park, FL 32789 (407) 629-0595
www. fuglebergkoch.com BR569

CONSULTANT
Joseph, Lawrence & Co
Consulting Engineers
1180 HARWOOD AVE. SUITE 3000
ALTAMONTE SPRINGS, FLORIDA 32714
TEL: 321.972.4466
WWW.JLCENG.COM
CA NO. 28730

JLC 17.0137.00

Adam Joseph Barney
P.E. #:69124

SUMMER BAY APTS. II
LAKE COUNTY, FL

Drawn:	MJR/KCM
Checked:	BLS/AJB
Approval:	BLS/AJB
Date:	11/10/2017
Project #:	5389

CLUBHOUSE FLOOR PLAN - FIRE PROT.

FP12.01

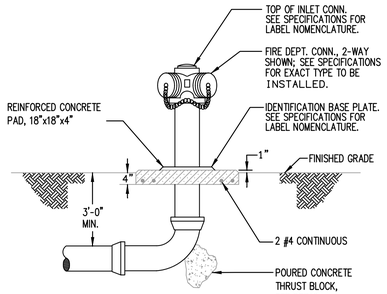

NOTE:
1. MOUNTING HEIGHT SHALL COMPLY WITH AUTHORITIES HAVING JURISDICTION.

8 NTS FREE STANDING VERTICAL FIRE DEPARTMENT CONNECTION DETAIL

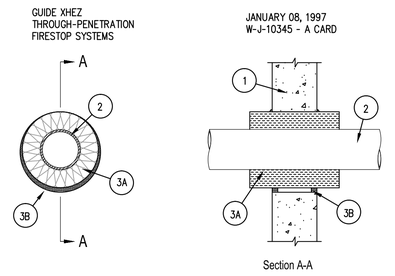

1. CONCRETE OR CONCRETE BLOCK WALL.
2. MAX. 4" STEEL OR IRON PIPE, COPPER PIPE OR TUBE.

3A. 2" THICK FIBERGLASS INSULATION (USED TO CREATE A BUFFER ZONE) EXTENDING A MINIMUM OF 2\" FROM EACH SURFACE OF THE WALL. ANNULUS RANGING FROM POINT CONTACT OF \" MAXIMUM.

3B. SPECSEAL SERIES 100 SEALANT INSTALLED TO 5/8"DEPTH, FLUSH WITH BOTH SURFACES OF THE WALL. AT POINT CONTACT, INSTALL A [" COVE BEAD OF SEALANT AT INSTULATION/ CONCRETE WALL INTERFACE.

7 NTS 2 HOUR FIRE WALL PENETRATION DETAIL

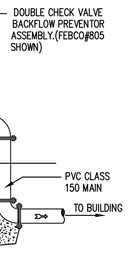

6 NTS FIRE PROTECTION BACKFLOW PREVENTOR DETAIL

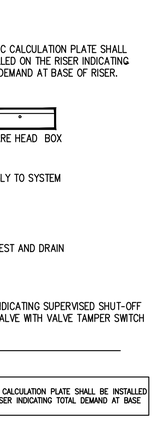

3 NTS FIRE SPRINKLER RISER ASSEMBLY DETAIL (CLUBHOUSE)

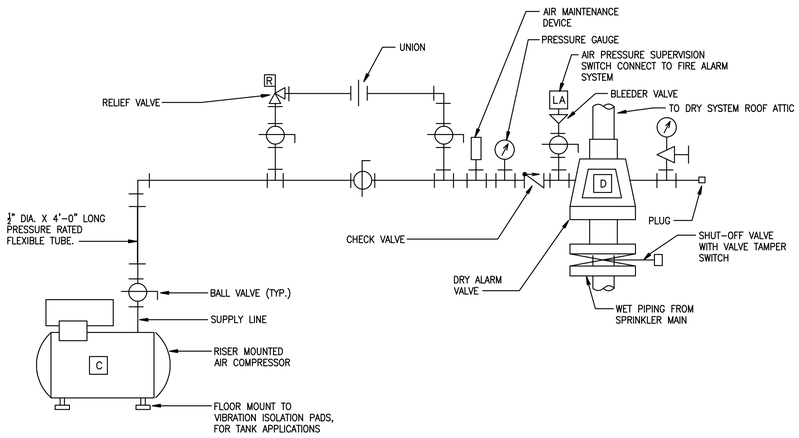

5 NTS DRY PIPE DETAIL

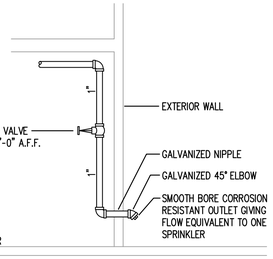

4 NTS INSPECTOR TEST DETAIL (CLUBHOUSE)

CPVC PIPE HANGER SCHEDULE

	TABLE 1		TABLE 2	
PIPE SIZE	LESS THAN 100 psi	MORE THAN 100 psi	LESS THAN 100 psi	MORE THAN 100 psi
3/4"	9"	6"	4'-0"	3'-0"
1"	12"	9"	5'-0"	4'-0"
1-1/4"	16"	12"	6'-0"	5'-0"
1-1/2"	24"	12"	7'-0"	7'-0"
2"	24"	12"	7'-0"	7'-0"
2-1/2"	24"	12"	7'-0"	7'-0"
3"	24"	12"	7'-0"	7'-0"

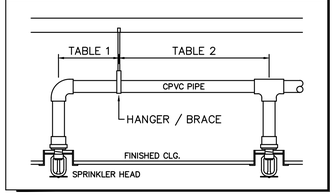

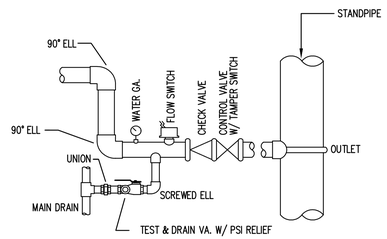

2 NTS SPRINKLER SYSTEM FLOOR CONTROL VALVE DETAIL (APARTMENTS)

NOTE: PAINT PIPING W/1 COAT PRIMER AND 2 COATS OR RED PAINT, SEMI-GLOSS.

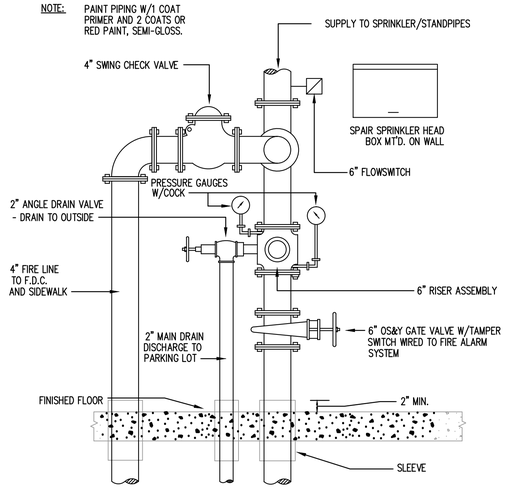

1 NTS FIRE SPRINKLER SUPPLY DETAIL (APARTMENTS)

PERMIT REVIEW STAMP

ISSUE HISTORY

No.	Date	Description
1	10/06/2017	COORDINATION SET
2	11/10/2017	75%-90% REVIEW COORD. SET

REVISION HISTORY

No.	Date	Description

© 2015 These drawings and their contents are the property of FUGLEBERG KOCH, P.L.C. +A20001220 - and are issued only for the specific project noted on these drawings. Any reproductions, revisions, or modifications of these documents without the expressed written consent of Fugleberg Koch, P.L.C. is prohibited by law.

FUGLEBERG KOCH
2555 Temple Trail, Winter Park, FL 32789 (407) 629-0595
www.fuglebergkoch.com BR569

CONSULTANT
Joseph, Lawrence & Co Consulting Engineers
1180 HARWOOD AVE. SUITE 3000
ALTAMONTE SPRINGS, FLORIDA 32714
TEL: 321.972.4466
WWW.JLCENG.COM
CA NO. 28730

JLC 17.0137.00

Adam Joseph Barney
P.E. #:69124

SUMMER BAY APTS. II
LAKE COUNTY, FL

Drawn:	MJR/KCM
Checked:	BLS/AJB
Approval:	BLS/AJB
Date:	11/10/2017
Project #:	5389

APARTMENT & CLUBHOUSE DETAILS- FIRE PROTECTION

FP13.01

ABBREVIATIONS

ABV	ABOVE
ADJ	ADJUSTABLE
AF	AIRFOIL
AFF	ABOVE FINISHED FLOOR
AC	AIR CONDITIONER
ACU	AIR CONDITIONING UNIT
AHU	AIR HANDLING UNIT
AP	ACCESS PANEL
BAS	BUILDING AUTOMATION SYSTEM
BI	BACKWARD INCLINE
BLDG	BUILDING
BHP	BRAKE HORSEPOWER
BTUH	BRITISH THERMAL UNIT PER HOUR
CD	CONDENSATE DRAIN
CFM	CUBIC FEET PER MINUTE
CLG	CEILING
CW	CHILLED WATER
CWR	CHILLED WATER RETURN
CWS	CHILLED WATER SUPPLY
CONC	CONCRETE
COND	CONDENSATE
CONT	CONTINUOUS
CO	CARBON MONOXIDE
COP	COEFFICIENT OF PERFORMANCE
CU	CONDENSING UNIT
DB	DRYBULB
DWDI	DOUBLE WIDTH, DOUBLE INLET
DWGS	DRAWINGS
DX	DIRECT EXPANSION
EF	EXHAUST FAN
EXH	EXHAUST
EA	EACH
EAT	ENTERING AIR TEMPERATURE
EER	ENERGY EFFICIENCY RATIO
ELECT	ELECTRICAL
ENT	ENTERING
EQ	EQUAL
ER	EXHAUST REGISTER
EWT	ENTERING WATER TEMPERATURE
FC	FORWARD CURVED
FCU	FAN COIL UNIT
FD	FIRE DAMPER
FL	FLOOR
FLEX	FLEXIBLE CONNECTOR OR DUCT
FPM	FEET PER MINUTE
F/S	COMBINATION FIRE AND SMOKE DAMPER
FT. H_2O	FEET WATER GAUGE
F	DEGREES FAHRENHEIT
GA	GAUGE
GAL	GALLON
GALV	GALVANIZED
GPM	GALLONS PER MINUTE
HP	HORSEPOWER
HTWR	HIGH TEMPERATURE HOT WATER RETURN
HTWS	HIGH TEMPERATURE HOT WATER SUPPLY
HW	HOT WATER
HWR	HOT WATER RETURN
HWS	HOT WATER SUPPLY
HVAC	HEATING VENTILATING AND AIR CONDITIONING
HV	HEATING AND VENTILATING
IN.WG	INCHES WATER GAGE
KW	KILOWATTS
LAT	LEAVING AIR TEMPERATURE
LD	LINEAR DIFFUSER
LWT	LEAVING WATER TEMPERATURE
MAX	MAXIMUM
MBH	1000 X BTUH
MIN	MINIMUM
MVD	MANUAL VOLUME DAMPER
MZ	MULTI-ZONE
N.T.S.	NOT TO SCALE
OA	OUTSIDE AIR
OBMVD	OPPOSED BLADE MANUAL VOLUME DAMPER
OPD	OPEN DRIP PROOF
PROP	PROPELLER
PCR	PRE-CONDITIONED AIR SYSTEM RETURN WATER
PCS	PERCENT
PD	PRESSURE DROP
PERF. PL.	PERFORATED PLATE
PLBG	PLUMBING
PSIA	POUNDS PER SQUARE INCH ABSOLUTE
PSIG	POUNDS PER SQUARE INCH GAUGE
RA	RETURN AIR
RD	RADIATION DAMPER
REG	REGISTER
REQ'D	REQUIRED
RG	RETURN AIR GRILLE
RH	RELATIVE HUMIDITY
RPM	REVOLUTIONS PER MINUTE
RR	RETURN AIR REGISTER
RTU	ROOFTOP UNIT
SA	SUPPLY AIR
SF	SUPPLY FAN
SDT	SMOKE DETECTOR
SD	SUPPLY DIFFUSER
SDMP	SMOKE DAMPER
SQ.FT.	SQUARE FOOT
SR	SUPPLY REGISTER
STR	STARTER
SWSI	SINGLE WIDTH, SINGLE INLET
SZ	SINGLE ZONE
TEFC	TOTALLY ENCLOSED FAN COOLED
TEMP	TEMPERATURE
TG	TRANSFER GRILLE
T/O	TRANSFER OPENING ABOVE CEILING
T'STAT	THERMOSTAT
TYP	TYPICAL
VFDC	VARIABLE FREQUENCY DRIVE CONTROLLER
VAV	VARIABLE AIR VOLUME
VS	VARIABLE SPEED
W	WATTS
W/	WITH
W/O	WITHOUT
WB	WETBULB
ZD	ZONE DAMPER

GENERAL NOTES

1. INSTALL EQUIPMENT AND MATERIALS IN COMPLIANCE WITH MANUFACTURER'S MINIMUM CLEARANCE REQUIREMENTS AND RECOMMENDATIONS.
2. COMPLY WITH THE LATEST EDITIONS OF NFPA AND THE LATEST ADOPTED EDITION GEORGIA BUILDING CODE (MECHANICAL, PLUMBING AND GAS).
3. ALL MATERIALS SHALL FIT THE SPACE AVAILABLE. VERIFY DIMENSIONS AND CLEARANCES ON BUILDING PLANS PRIOR TO COMMENCING WORK.
4. CONTRACTOR IS RESPONSIBLE FOR TESTING AND BALANCING OF AIR SYSTEMS IN ACCORDANCE WITH AABC GUIDELINES. A TEST AND BALANCE REPORT SHALL BE SUBMITTED TO THE ARCHITECT FOR APPROVAL.
5. PROVIDE 45 DEGREE BRANCH TAKE-OFF PER SMACNA FIG. 2-8 ON ALL RECTANGULAR DUCT TAKE-OFFS.
6. PROVIDE AND INSTALL DUCT MOUNTED HINGED ACCESS DOORS FOR ALL SMOKE AND/OR FIRE DAMPERS, NOT OTHERWISE ACCESSIBLE.
7. CONTRACTOR SHALL COORDINATE VOLTAGE AND PHASE OF EACH PIECE OF EQUIPMENT WITH THE ELECTRICAL CONTRACTOR PRIOR TO ORDERING AND SHALL COORDINATE WITH ALL OTHER TRADES PRIOR TO OR INSTALLING EQUIPMENT AND MATERIALS.
8. COORDINATE ALL HVAC SYSTEM DRAWINGS WITH EXISTING/NEW TRUSS TO AVOID INTERFERENCE BETWEEN MECHANICAL SYSTEMS AND ROOF STRUCTURE. CONTRACTOR SHALL BE RESPONSIBLE FOR ALL COSTS ASSOCIATED WITH TRUSS INTERFERENCE THAT OCCURS IN THE FIELD DURING CONSTRUCTION. COORDINATE IN ADVANCE. DUCT SIZES MAY BE REVISED TO FIT TRUSS SYSTEM SO LONG AS THE EQUIVALENT INSIDE CROSS SECTIONAL AREA IS NOT DECREASED.
9. GAUGES AND CONSTRUCTION FOR DUCTWORK SHALL CONFORM TO THE LATEST EDITION OF SMACNA'S HVAC DUCT CONSTRUCTION STANDARDS,
10. TRANSITION RECTANGULAR DUCTWORK ON BOTTOM AND SIDES. MAINTAIN TOP OF DUCTWORK LEVEL AND HIGH AS POSSIBLE. FLEXIBLE DUCT RUN-OUTS TO CEILING DIFFUSERS SHALL BE AS STRAIGHT AS POSSIBLE AND FREE OF SAGS & KINKS. FLEX DUCT SHALL BE THE SAME SIZE AS THE DIFFUSER NECK IT SERVES.
11. ALL DUCT TRANSITIONS FROM SQUARE TO ROUND SHALL BE SMOOTH SQUARE TO ROUND TRANSITIONS. SPIN-IN FITTINGS AT THE END OF CAPPED DUCTS ARE NOT ACCEPTABLE. DUCT DIMENSIONS SHOWN ARE INSIDE CLEAR DIMENSIONS.
12. THE CONTRACTOR SHALL FULFILL ALL REQUIREMENTS OF THE CONTRACT DOCUMENTS AND SHALL COMPLETE THE WORK SHOWN ON THESE DRAWINGS. ALL SYSTEMS SHALL BE FINISHED, TESTED AND BALANCED, ADJUSTED, AND PROVEN TO BE FULLY OPERATIONAL AND USEABLE.
13. ADJUST ALL DIFFUSERS IN CORRIDORS OR WITHIN THREE (3) FEET OF A WALL TO PROVIDE 2-WAY OR 3-WAY BLOW AWAY FROM OR PARALLEL TO WALLS. ALL DIFFUSERS SHALL HAVE 4-WAY BLOW UNLESS NOTED OTHERWISE.
14. PORTIONS OF DUCTWORK VISIBLE THROUGH GRILLES AND REGISTERS IN FINISHED AREAS SHALL BE PAINTED FLAT BLACK.
15. ALL DAMPERS IN AND ABOVE CEILING SHALL BE ACCESSIBLE. CONTRACTOR SHALL COORDINATE ALL ACCESS PANELS IN CEILINGS OR WALLS WITH ARCHITECTURAL REFLECTED CEILING PLANS AND INTERIOR DRAWINGS FOR PROPER LOCATION.
16. MOUNT THERMOSTATS WHERE INDICATED ON PLANS 48" A.F.F. UNLESS NOTED OTHERWISE. IN HANDICAPPED ACCESSIBLE AREAS, MOUNT CONTROLS AT 48" ABOVE FINISHED FLOOR.
17. COORDINATE DUCTWORK AND PIPING WITH PLUMBING, FIRE PROTECTION AND ELECTRICAL. MAKE OFFSETS AND TRANSITIONS TO COORDINATE WITH OTHER TRADES WITHOUT ANY ADDITIONAL EXPENSE TO THE CONTRACT.
18. SEAL ALL TRANSVERSE JOINTS AND FITTINGS WITH DUCT SEALER.
19. TRAP AND ROUTE CONDENSATE DRAINS LINES, FULL SIZE OF UNIT CONNECTION, AS INDICATED. SLOPE 1/8" PER FOOT.
20. ALTERNATE MANUFACTURERS AND MODELS WILL BE REVIEWED. THERE MAY BE ARCHITECTURAL, STRUCTURAL AND ELECTRICAL CHANGES RESULTING FROM THE ALTERNATES. THE COST OF IMPLEMENTING AND ENGINEERING THESE CHANGES SHALL BE BORNE BY THE MECHANICAL SUBCONTRACTOR.
21. PIPE AND DUCT ROUTING SHOWN IS SCHEMATIC. PROVIDE ANY ADDITIONAL OFFSETS AND FITTINGS, INCLUDING DIVIDED DUCTS, REQUIRED FOR PROPER INSTALLATION AND TO MAINTAIN CLEARANCES AS ENCOUNTERED IN THE FIELD.
22. COORDINATE CEILING MOUNTED AIR DEVICE LOCATION WITH REFLECTED CEILING PLAN AND OTHER TRADES.
23. ALL CONTROL WIRING AND CONDUIT SHALL COMPLY WITH NEC DIVISION 16 SPECIFICATIONS.
24. PROVIDE MATERIALS WHICH HAVE A FLAME SPREAD RATING OF 25 OR LESS AND A SMOKE DEVELOPED RATING OF 50 OR LESS WHEN TESTED IN ACCORD WITH ASTM E84.
25. SLEEVE AND FIRE STOP PENETRATIONS THROUGH FIRE RATED SYSTEMS TO MAINTAIN RATING OF SYSTEM. USE MINIMUM GALVANIZED STEEL GAUGE DUCT AS REQUIRED TO MAINTAIN RATING OF SYSTEM.
26. THE TABC SHALL BE EMPLOYED DIRECTLY BY THE GENERAL CONTRACTOR WHO SHALL BE SOLELY RESPONSIBLE FOR ITS PERFORMANCE AND THE TIMELY SCHEDULE OF ITS OPERATION.
27. WHERE THE EXHAUST DUCT IS CONCEALED WITHIN THE BUILDING CONSTRUCTION, THE EQUIVALENT LENGTH OF THE DUCT SHALL BE IDENTIFIED ON A PERMENANT LABEL OR TAG. THE LABEL OR TAG SHALL BE LOCATED WITHIN 6 FEET OF THE EXHAUST DUCT CONNECTION.

NOTE:
GENERAL NOTES ON THIS MECHANICAL SHEET ARE FOR GENERAL REFERENCE PURPOSES ONLY. ALL OF THESE NOTES MAY NOT BE USED FOR THIS PROJECT.

LEGEND

	SUPPLY DIFFUSER. (4-WAY)
	RETURN OR OUTDOOR AIR GRILLE
	EXHAUST GRILLE
	SUPPLY DUCT UP SECTION (RECTANGULAR)
	RETURN DUCT UP SECTION (RECTANGULAR)
	EXHAUST DUCT UP SECTION (RECTANGULAR)
	SUPPLY DUCT DOWN SECTION (RECTANGULAR)
	RETURN DUCT DOWN SECTION (RECTANGULAR)
	EXHAUST DUCT DOWN SECTION (RECTANGULAR)
	SUPPLY DUCT UP SECTION (ROUND).
	SUPPLY DUCT DOWN SECTION (ROUND).
	LINEAR SLOT DIFFUSER
	EXISTING LINEAR SLOT DIFFUSER (LIGHT LINETYPE)
A/B	RECTANGULAR DUCTWORK WITH TAKE-OFF, BALANCING DAMPER AND INSULATED FLEXIBLE ROUND DUCT. SAME SIZE AS DIFFUSER INLET UNLESS NOTED OTHERWISE. FIRST DIMENSION IS THAT OF SIDE SHOWN.
A ø	ROUND DUCTWORK.
	CONICAL FITTING WITH DAMPER ON BRANCH CONNECTION TO RECTANGULAR MAIN (PROVIDE DAMPER IN LOW PRESSURE DUCTWORK ONLY).
	EXISTING DUCTWORK TO REMAIN (LIGHT LINETYPE)
R	DUCT OFFSETS UP (RISE) IN DIRECTION INDICATED.
D	DUCT OFFSETS DOWN (DROP) IN DIRECTION INDICATED.
	OPPOSED BLADE VOLUME DAMPER (OBD).
	MANUAL DAMPER
	FLEXIBLE DUCT CONNECTION.
	FIRE DAMPER WITH ACCESS PANEL.
	COMBINATION FIRE/SMOKE DAMPER WITH ACCESS PANEL.
	EXISTING DUCTWORK TO BE REMOVED (DASHED LINETYPE)
(SD)	DUCT MOUNTED SMOKE DETECTOR PROVIDED AND WIRED BY ELECTRICAL CONTRACTOR AND INSTALLED IN DUCT BY MECHANICAL CONTRACTOR. REFER TO SPECIFICATIONS FOR CONTROL REQUIREMENTS.
A-100	AIR DEVICE TAG MARK-CFM
	SIDEWALL TRANSFER GRILLE
	SIDEWALL SUPPLY REGISTER
	SIDEWALL RETURN GRILLE OR OUTSIDE AIR LOUVER
	SIDEWALL EXHAUST GRILLE
TS	WALL MOUNTED DDC TEMPERATURE SENSOR MOUNT 48" ABOVE FINISHED FLOOR.
T	WALL MOUNTED THERMOSTAT MOUNT 48" ABOVE FINISHED FLOOR.
C	WALL MOUNTED CO SENSOR MOUNT 48" ABOVE FINISHED FLOOR.
H	WALL MOUNTED DDC HUMIDITY SENSOR MOUNT 48" ABOVE FINISHED FLOOR.
H^S	WALL MOUNTED HUMIDISTAT SENSOR MOUNT 48" ABOVE FINISHED FLOOR.
A / B	PHOTO DETAIL OR SECTION IDENTIFICATION TARGET A = DETAIL NUMBER. B = SHEET NUMBER ON WHICH DETAIL IS LOCATED.
RD	RADIATION DAMPER INSTALLED IN AIR DEVICE
RD	RADIATION DAMPER INSTALLED IN DUCT.
	ELBOW WITH TURNING VANES
X	REFERENCE NOTES
X	REFERENCE NOTE - MULTI-DISCIPLINE SHEETS
	FLOW DIRECTION
	INDICATES POINT OF CONNECTION BETWEEN NEW AND EXISTING.
	POINT OF DISCONNECT
CWS	CONDENSER WATER SUPPLY PIPING.
CWR	CONDENSER WATER RETURN PIPING.
BCWS	BUILDING CONDENSER WATER SUPPLY PIPING.
BCWR	BUILDING CONDENSER WATER RETURN PIPING.
CHWS	CHILLED WATER SUPPLY PIPING.
CHWR	CHILLED WATER RETURN PIPING.
HWS	HEATING WATER SUPPLY PIPING.
HWR	HEATING WATER RETURN PIPING.
CD	CONDENSATE DRAIN PIPING.
R	REFRIGERANT PIPING
FS	FLOW SENSOR.
SP	STATIC PRESSURE TRANSMITTER ASSEMBLY.
L=1.4W, MIN. 4" / 45° / W	RECTANGULAR BRANCH DUCT CONNECTION. (PROVIDE BALANCING DAMPER AT ALL BRANCH CONNECTIONS)
	TEE (PLAN, UP, DOWN).
	ELBOW (PLAN, UP, DOWN).
	VALVE.
	TWO WAY MOTORIZED CONTROL VALVE.
	THREE WAY MOTORIZED CONTROL VALVE.
	PRESSURE REDUCING VALVE.
	FLOW CONTROL VALVE.
	BALL VALVE FOR PIPING 2-INCHES AND SMALLER, BUTTERFLY VALVE FOR PIPING 2-1/2 INCHES AND LARGER.
	BUTTERFLY VALVE.
	CHECK VALVE.
	STRAINER.
	BALANCE VALVE WITH INTEGRAL TAPS FOR CONNECTION OF DIFFERENTIAL PRESSURE METER. VALVE SHALL HAVE NAMEPLATE INDICATING WATER FLOW RATE VERSUS VALVE PRESSURE DROP.
A	AUTOMATIC FLOW CONTROL VALVE WITH INTEGRAL TEMPERATURE AND PRESSURE TEST PORTS.
	UNION.
	VENTURI FLOW METER.
	PRESSURE AND/OR TEMPERATURE PORT
	THERMOMETER.
	PRESSURE GAUGE WITH GAUGE COCK.
	FLEXIBLE CONNECTION.
	PRESSURE RELIEF VALVE.
M	MOTORIZED ACTUATOR
	OPENING IN WALL ABOVE CEILING.
AHU 3 — EQUIPMENT TYPE / MARK	EQUIPMENT TAG
UC	1" DOOR UNDER CUT. ARROW INDICATES DIRECTION OF FLOW

NOTE:
SYMBOLS SHOWN ON THIS MECHANICAL LEGEND ARE FOR REFERENCE PURPOSES ONLY. ALL OF THESE SYMBOLS MAY NOT BE USED FOR THIS PROJECT.

PERMIT REVIEW STAMP

ISSUE HISTORY

No.	Date	Description
1	10/06/2017	COORDINATION SET
2	11/10/2017	75%-90% REVIEW COORD. SET

REVISION HISTORY

No.	Date	Description

© 2015 These documents and the contents thereof are the property of FUGLEBERG KOCH, P.L.C. (+4200012) and are issued only for the specific project noted on these drawings. Any reproductions, revisions, or modifications of these documents without the expressed written consent of Fugleberg Koch, P.L.C. is prohibited by law.

FUGLEBERG KOCH
2555 Temple Trail, Winter Park, FL 32789 (407) 629-0595
www.fuglebergkoch.com BR569

CONSULTANT
Joseph, Lawrence & Co
Consulting Engineers
1180 HARWOOD AVE. SUITE 3000
ALTAMONTE SPRINGS, FLORIDA 32714
TEL: 321.972.4466
WWW.JLCENG.COM
CA NO. 28730

JLC 17.0137.00

Adam Joseph Barney
P.E. #.69124

SUMMER BAY APTS. II
LAKE COUNTY, FL

Drawn:	MJR/KCM
Checked:	BLS/AJB
Approval:	BLS/AJB
Date:	11/10/2017
Project #:	5389

SYMBOL LEGEND - MECHANICAL

M0.01

REFERENCE NOTES: (X)

1. ROUTE EXHAUST DUCT FROM WALL MOUNTED EXHAUST FAN THROUGH TRUSS SPACE TO BUILDING SIDEWALL. TERMINATE DUCT AT EXTERIOR WALL CAP WITH BIRD SCREEN PER DIAGRAM ON SHEET M7.01. PRIME COAT AND PAINT WALL CAP TO MATCH BUILDING COLOR. SEE INDIVIDUAL UNIT PLANS FOR CONTINUATION.
2. ROUTE DRYER EXHAUST DUCT THROUGH TRUSS SPACE TO BUILDING SIDEWALL. TERMINATE DUCT AT EXTERIOR WALL CAP PER DIAGRAM ON SHEET M7.01. PRIME COAT AND PAINT WALL CAP TO MATCH BUILDING COLOR. SEE INDIVIDUAL UNIT PLAN FOR CONTINUATION.
3. ROUTE REFRIGERANT LINES WITHIN MECHANICAL CLOSET WALL UP TO ROOF MOUNTED CONDENSING UNIT. SEE PLUMBING PLANS FOR CONDENSATE LINE ROUTING.
4. PROVIDE HARD WIRED 120V CARBON MONOXIDE MONITOR EQUAL TO FIRST ALERT MODEL BRK-SC02B. INTERCONNECT TO DWELLING UNIT GARAGE EXHAUST FAN WITH BRK RELAY MODULE PER CARBON MONOXIDE ALARM WITH FAN RELAY DETAIL NUMBER 7 ON SHEET M6.01. FAN TO ACTIVATE UPON DETECTION OF CARBON MONOXIDE.
5. ROUTE 8"x8" GARAGE EXHAUST THROUGH TRUSS SPACE TO EXTERIOR WALL. PROVIDE WALL CAP PER DETAIL ON SHEET M6.01.
6. LOCATE MAU ABOVE DOOR. ROUTE CONDENSATE FROM MAU THRU WALL TO CONDENSATE RISER. SEE PLUMBING PLANS FOR CONDENSATE LINE ROUTING. ROUTE REFRIGERANT LINES IN WALL AND UP TO CONDENSING UNIT ON ROOF.
7. ROUTE OUTSIDE AIR DUCT FROM CORRIDOR AIR HANDLER ABOVE CEILING TO BUILDING SIDEWALL. TERMINATE WITH WALL CAP PER DETAIL ON SHEET M6.01. PRIME COAT AND PAINT WALL CAP TO MATCH BUILDING COLOR. PROVIDE MOTORIZED DAMPER IN VERTICAL SECTION OF OUTSIDE AIR DUCT IN MECHANICAL ROOM. OUTSIDE AIR INTAKE TO BE A MINIMUM OF 10'-0" FROM ALL EXHAUST OUTLETS.
8. PROVIDE NEW FULLY DIGITAL 7 DAY PROGRAMMABLE TYPE THERMOSTAT WITH AUTO CHANGE OVER AND AUTO SET BACK. MOUNT THERMOSTAT 48" ABOVE FINISHED FLOOR. PROVIDE WITH CLEAR ACRYLIC LOCKING COVER.

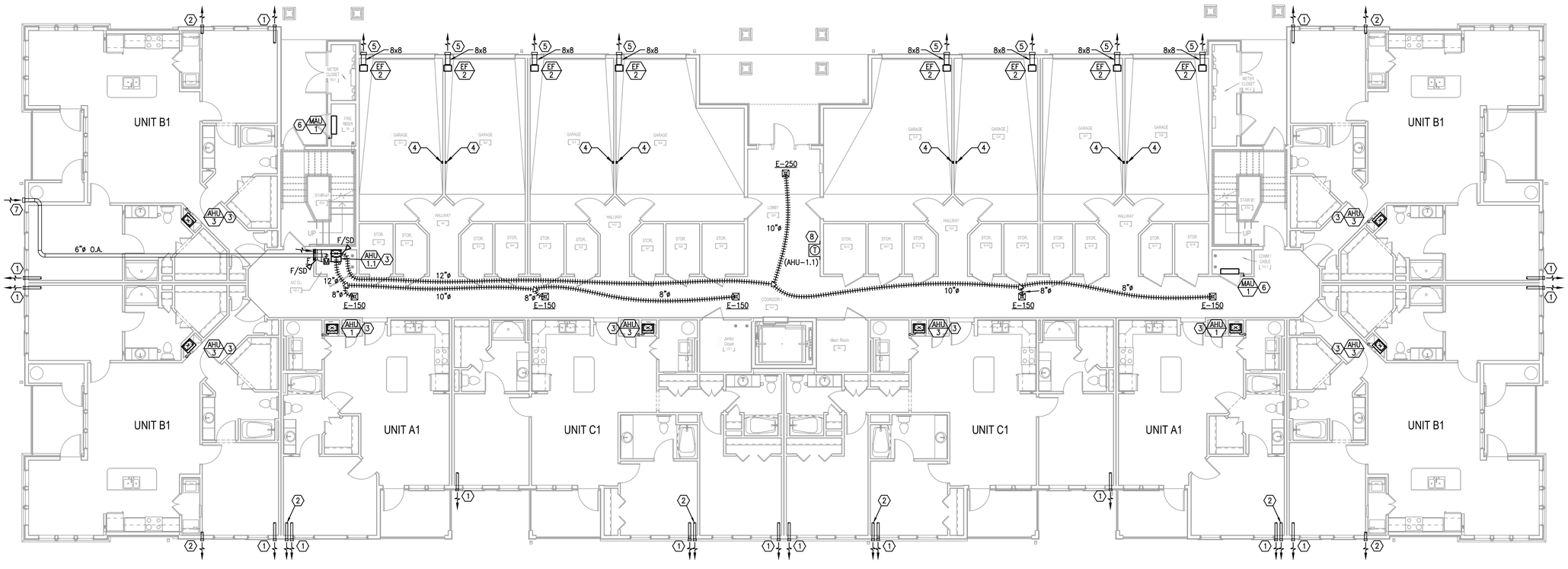

H1 BUILDING TYPE 1 - GROUND LEVEL - MECHANICAL
1/8" = 1'-0"

PERMIT REVIEW STAMP

ISSUE HISTORY

No.	Date	Description
1	10/06/2017	COORDINATION SET
2	11/10/2017	75%-90% REVIEW COORD. SET

REVISION HISTORY

No.	Date	Description

FUGLEBERG KOCH
2555 Temple Trail, Winter Park, FL 32789 (407) 629-0595
www.fuglebergkoch.com BR569

CONSULTANT
Joseph, Lawrence & Co
Consulting Engineers
1180 HARWOOD AVE. SUITE 3000
ALTAMONTE SPRINGS, FLORIDA 32714
TEL: 321.972.4466
WWW.JLCENG.COM
CA NO. 28730

JLC 17.0137.00

Adam Joseph Barney
P.E. #:69124

SUMMER BAY APTS. II
LAKE COUNTY, FL

Drawn:	MJR/KCM
Checked:	BLS/AJB
Approval:	BLS/AJB
Date:	11/10/2017
Project #:	5389

BUILDING TYPE 1 - GROUND FLOOR PLAN - MECHANICAL

M2.01

© 2015 These documents and their contents are the property of FUGLEBERG KOCH, PLLC - AA26002103, and are issued only for the specific project noted on these drawings. Any reproductions, revisions, or modifications of these documents without the expressed written consent of Fugleberg Koch, PLLC is prohibited by law.

REFERENCE NOTES: (X)

1. ROUTE EXHAUST DUCT FROM WALL MOUNTED EXHAUST FAN THROUGH TRUSS SPACE TO BUILDING SIDEWALL. TERMINATE DUCT AT EXTERIOR WALL CAP WITH BIRD SCREEN PER DIAGRAM ON SHEET M7.01. PRIME COAT AND PAINT WALL CAP TO MATCH BUILDING COLOR. SEE INDIVIDUAL UNIT PLANS FOR CONTINUATION.
2. ROUTE DRYER EXHAUST DUCT THROUGH TRUSS SPACE TO BUILDING SIDEWALL. TERMINATE DUCT AT EXTERIOR WALL CAP PER DIAGRAM ON SHEET M7.01. PRIME COAT AND PAINT WALL CAP TO MATCH BUILDING COLOR. SEE INDIVIDUAL UNIT PLAN FOR CONTINUATION.
3. ROUTE REFRIGERANT LINES WITHIN MECHANICAL CLOSET WALL UP TO ROOF MOUNTED CONDENSING UNIT. SEE PLUMBING PLANS FOR CONDENSATE LINE ROUTING.
4. ROUTE OUTSIDE AIR DUCT FROM CORRIDOR AIR HANDLER ABOVE CEILING TO BUILDING SIDEWALL. TERMINATE WITH WALL CAP PER DETAIL ON SHEET M6.01. PRIME COAT AND PAINT WALL CAP TO MATCH BUILDING COLOR. PROVIDE MOTORIZED DAMPER IN VERTICAL SECTION OF OUTSIDE AIR DUCT IN MECHANICAL ROOM. OUTSIDE AIR INTAKE TO BE A MINIMUM OF 10'-0" FROM ALL EXHAUST OUTLETS.
5. PROVIDE NEW FULLY DIGITAL 7 DAY PROGRAMMABLE TYPE THERMOSTAT WITH AUTO CHANGE OVER AND AUTO SET BACK. MOUNT THERMOSTAT 48" ABOVE FINISHED FLOOR. PROVIDE WITH CLEAR ACRYLIC LOCKING COVER.

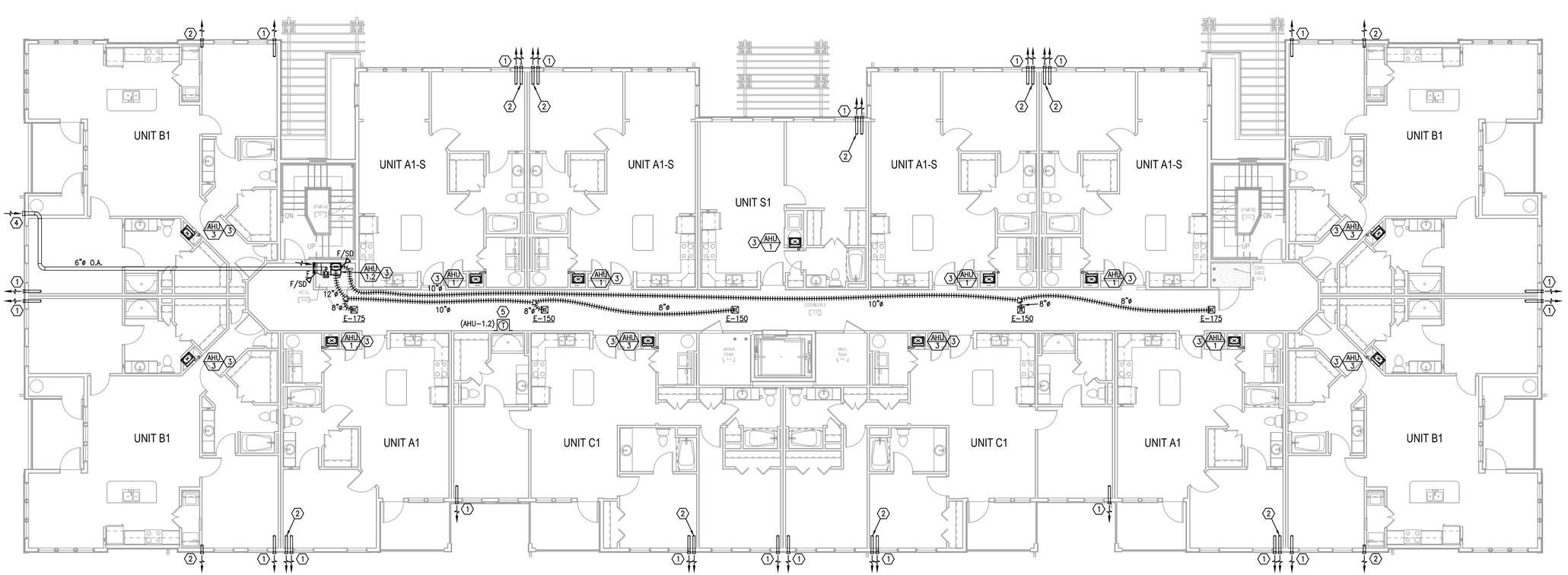

H1 BUILDING TYPE 1 - LEVEL 2 - MECHANICAL
1/8" = 1'-0"

PERMIT REVIEW STAMP

ISSUE HISTORY

No.	Date	Description
1	10/06/2017	COORDINATION SET
2	11/10/2017	75%-90% REVIEW COORD. SET

REVISION HISTORY

No.	Date	Description

FUGLEBERG KOCH
2555 Temple Trail, Winter Park, FL 32789 (407) 629-0595
www.fuglebergkoch.com BR569

CONSULTANT
Joseph, Lawrence & Co
Consulting Engineers
1180 HARWOOD AVE. SUITE 3000
ALTAMONTE SPRINGS, FLORIDA 32714
TEL: 321.972.4466
WWW.JLCENG.COM
CA NO. 28730

JLC 17.0137.00

Adam Joseph Barney
P.E. #:69124

SUMMER BAY APTS. II
LAKE COUNTY, FL

Drawn:	MJR/KCM
Checked:	BLS/AJB
Approval:	BLS/AJB
Date:	11/10/2017
Project #:	5389

BUILDING TYPE 1 - LEVEL 2 PLAN - MECHANICAL

M2.02

© 2015 These documents and their contents are the property of FUGLEBERG KOCH, PLLC - AA26002103, and are issued only for the specific project noted on these drawings. Any reproductions, revisions, or modifications of these documents without the expressed written consent of Fugleberg Koch, PLLC is prohibited by law.

REFERENCE NOTES: (X)

1. ROUTE EXHAUST DUCT FROM WALL MOUNTED EXHAUST FAN THROUGH TRUSS SPACE TO BUILDING SIDEWALL. TERMINATE DUCT AT EXTERIOR WALL CAP WITH BIRD SCREEN PER DIAGRAM ON SHEET M7.01. PRIME COAT AND PAINT WALL CAP TO MATCH BUILDING COLOR. SEE INDIVIDUAL UNIT PLANS FOR CONTINUATION.
2. ROUTE DRYER EXHAUST DUCT THROUGH TRUSS SPACE TO BUILDING SIDEWALL. TERMINATE DUCT AT EXTERIOR WALL CAP PER DIAGRAM ON SHEET M7.01. PRIME COAT AND PAINT WALL CAP TO MATCH BUILDING COLOR. SEE INDIVIDUAL UNIT PLAN FOR CONTINUATION.
3. ROUTE REFRIGERANT LINES WITHIN MECHANICAL CLOSET WALL UP TO ROOF MOUNTED CONDENSING UNIT. SEE PLUMBING PLANS FOR CONDENSATE LINE ROUTING.
4. ROUTE OUTSIDE AIR DUCT FROM CORRIDOR AIR HANDLER ABOVE CEILING TO BUILDING SIDEWALL. TERMINATE WITH WALL CAP PER DETAIL ON SHEET M6.01. PRIME COAT AND PAINT WALL CAP TO MATCH BUILDING COLOR. PROVIDE MOTORIZED DAMPER IN VERTICAL SECTION OF OUTSIDE AIR DUCT IN MECHANICAL ROOM. OUTSIDE AIR INTAKE TO BE A MINIMUM OF 10'-0" FROM ALL EXHAUST OUTLETS.
5. PROVIDE NEW FULLY DIGITAL 7 DAY PROGRAMMABLE TYPE THERMOSTAT WITH AUTO CHANGE OVER AND AUTO SET BACK. MOUNT THERMOSTAT 48" ABOVE FINISHED FLOOR. PROVIDE WITH CLEAR ACRYLIC LOCKING COVER.

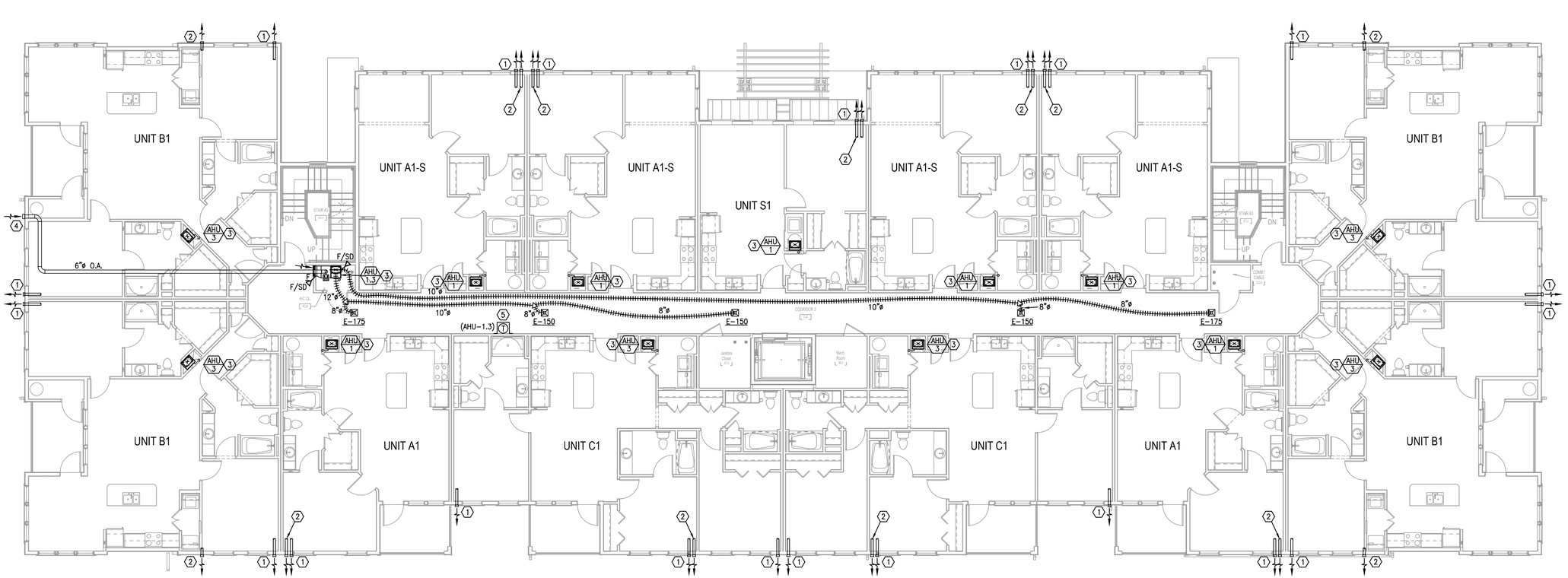

H1 BUILDING TYPE 1 - LEVEL 3 - MECHANICAL
1/8" = 1'-0"

PERMIT REVIEW STAMP

ISSUE HISTORY

No.	Date	Description
1	10/06/2017	COORDINATION SET
2	11/10/2017	75%-90% REVIEW COORD. SET

REVISION HISTORY

No.	Date	Description

© 2015 These documents and their contents are the property of FUGLEBERG KOCH, PLLC - AA26002103, and are issued only for the specific project noted on these drawings. Any reproductions, revisions, or modifications of these documents without the expressed written consent of Fugleberg Koch, PLLC is prohibited by law.

FUGLEBERG KOCH
2555 Temple Trail, Winter Park, FL 32789 (407) 629-0595
www.fuglebergkoch.com BR569

CONSULTANT
Joseph, Lawrence & Co
Consulting Engineers
1180 HARWOOD AVE. SUITE 3000
ALTAMONTE SPRINGS, FLORIDA 32714
TEL: 321.972.4466
WWW.JLCENG.COM
CA NO. 28730

JLC 17.0137.00

Adam Joseph Barney
P.E. #:69124

SUMMER BAY APTS. II
LAKE COUNTY, FL

Drawn:	MJR/KCM
Checked:	BLS/AJB
Approval:	BLS/AJB
Date:	11/10/2017
Project #:	5389

BUILDING TYPE 1 - LEVEL 3
PLAN - MECHANICAL

M2.03

REFERENCE NOTES: ⟨X⟩

⟨1⟩ ROUTE EXHAUST DUCT FROM WALL MOUNTED EXHAUST FAN THROUGH TRUSS SPACE TO BUILDING SIDEWALL. TERMINATE DUCT AT EXTERIOR WALL CAP WITH BIRD SCREEN PER DIAGRAM ON SHEET M7.01. PRIME COAT AND PAINT WALL CAP TO MATCH BUILDING COLOR. SEE INDIVIDUAL UNIT PLANS FOR CONTINUATION.

⟨2⟩ ROUTE DRYER EXHAUST DUCT THROUGH TRUSS SPACE TO BUILDING SIDEWALL. TERMINATE DUCT AT EXTERIOR WALL CAP PER DIAGRAM ON SHEET M7.01. PRIME COAT AND PAINT WALL CAP TO MATCH BUILDING COLOR. SEE INDIVIDUAL UNIT PLAN FOR CONTINUATION.

⟨3⟩ ROUTE REFRIGERANT LINES WITHIN MECHANICAL CLOSET WALL UP TO ROOF MOUNTED CONDENSING UNIT. SEE PLUMBING PLANS FOR CONDENSATE LINE ROUTING.

⟨4⟩ ROUTE OUTSIDE AIR DUCT FROM CORRIDOR AIR HANDLER ABOVE CEILING TO BUILDING SIDEWALL. TERMINATE WITH WALL CAP PER DETAIL ON SHEET M6.01. PRIME COAT AND PAINT WALL CAP TO MATCH BUILDING COLOR. PROVIDE MOTORIZED DAMPER IN VERTICAL SECTION OF OUTSIDE AIR DUCT IN MECHANICAL ROOM. OUTSIDE AIR INTAKE TO BE A MINIMUM OF 10'-0" FROM ALL EXHAUST OUTLETS.

⟨5⟩ PROVIDE NEW FULLY DIGITAL 7 DAY PROGRAMMABLE TYPE THERMOSTAT WITH AUTO CHANGE OVER AND AUTO SET BACK. MOUNT THERMOSTAT 48" ABOVE FINISHED FLOOR. PROVIDE WITH CLEAR ACRYLIC LOCKING COVER.

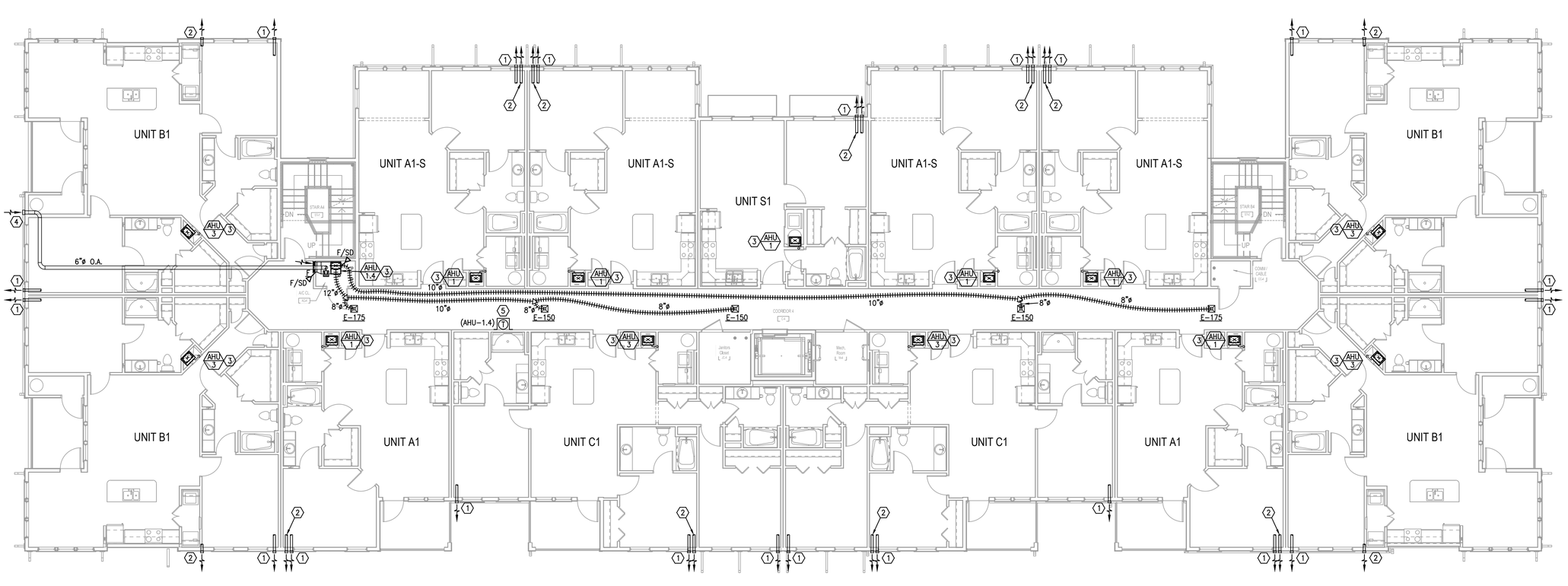

H1 BUILDING TYPE 1 - LEVEL 4 - MECHANICAL
1/8" = 1'-0"

PERMIT REVIEW STAMP

ISSUE HISTORY

No.	Date	Description
1	10/06/2017	COORDINATION SET
2	11/10/2017	75%-90% REVIEW COORD. SET

REVISION HISTORY

No.	Date	Description

© 2015 These documents and the ideas and designs incorporated herein, as an instrument of service, are the property of FUGLEBERG KOCH, P.L.C. (FK) and are loaned only for the specific project noted on these drawings. Any reproductions, revisions, or modifications of these documents without the expressed written consent of Fugleberg Koch, P.L.C. is prohibited by law.

FUGLEBERG KOCH
2555 Temple Trail, Winter Park, FL 32789 (407) 629-0595
www.fuglebergkoch.com BR569

CONSULTANT
Joseph, Lawrence & Co
Consulting Engineers
1180 HARWOOD AVE. SUITE 3000
ALTAMONTE SPRINGS, FLORIDA 32714
TEL: 321.972.4466
WWW.JLCENG.COM
CA NO. 28730

JLC 17.0137.00

Adam Joseph Barney
P.E. #:69124

SUMMER BAY APTS. II
LAKE COUNTY, FL

Drawn:	MJR/KCM
Checked:	BLS/AJB
Approval:	BLS/AJB
Date:	11/10/2017
Project #:	5389

BUILDING TYPE 1 - LEVEL 4 PLAN - MECHANICAL

M2.04

REFERENCE NOTES: ⟨X⟩

⟨1⟩ MOUNT NEW CONDENSING UNITS TO NEW ROOF MOUNTED RAIL SYSTEM. REFER TO DETAIL ON SHEET M15.92.

⟨2⟩ REFRIGERANT LINES UP THRU ROOF WITHIN STRUCTURAL BOX OUT FROM UNITS BELOW. PROVIDE REFRIGERANT LINE ROOF CAP PER DETAIL SHEET M15.92. KEEP PENETRATION THRU ROOF 3'-0" MINIMUM AWAY FROM VALLEYS AND GUTTERS.

⟨3⟩ SUPPORT REFRIGERANT PIPING ABOVE ROOF SURFACE PER ROOF SUPPORT DETAIL ON SHEET M15.92.

⟨4⟩ INSTALL 66"x18" ELEVATOR SHAFT RELIEF VENTILATION LOUVER ON SHAFT SIDEWALL. RUSKIN MODEL #ELF6425DD OR EQUIVALENT. THE AREA OF THE VENT SHALL BE NOT BE LESS THAN 3-1/2% OF THE AREA OF THE HOISTWAY NOR LESS THAN 3 SQUARE FEET FOR EACH ELEVATOR CAR. PROVIDE MOTORIZED DAMPER CONNECTED TO BUILDING FIRE ALARM SYSTEM. DAMPER TO REMAIN NO LESS THAN 1/3 OPEN DURING NORMAL OPERATION AND FULLY OPEN DURING A FIRE/ALARM EVENT.

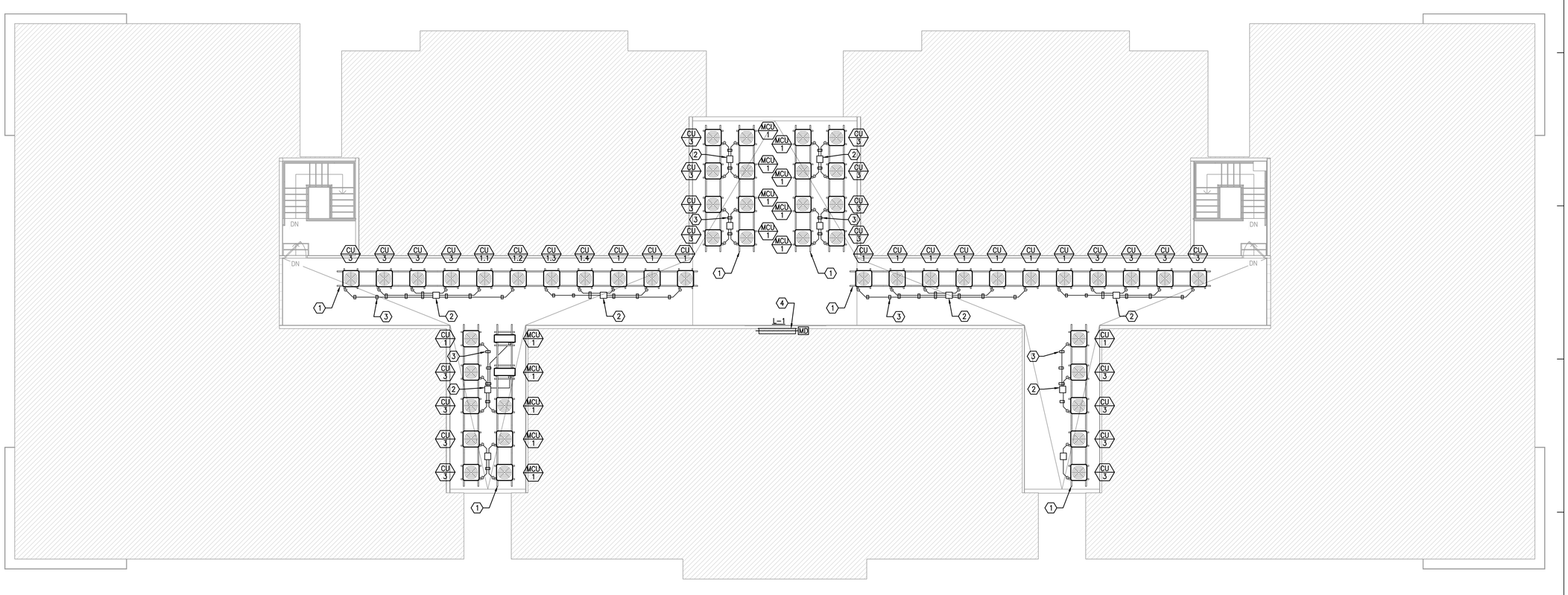

H1 BUILDING TYPE 1 - ROOF - MECHANICAL
1/8" = 1'-0"

PERMIT REVIEW STAMP

ISSUE HISTORY

No.	Date	Description
1	10/06/2017	COORDINATION SET
2	11/10/2017	75%-90% REVIEW COORD. SET

REVISION HISTORY

No.	Date	Description

© 2015 These documents and their contents are the property of FUGLEBERG KOCH, P.L.C. • 4200012203 and are issued only for the specific project noted on these drawings. Any reproductions, revisions, or modifications of these documents without the expressed written consent of Fugleberg Koch, P.L.C. is prohibited by law.

FUGLEBERG KOCH
2555 Temple Trail, Winter Park, FL 32789 (407) 629-0595
www.fuglebergkoch.com BR569

CONSULTANT
Joseph, Lawrence & Co
Consulting Engineers
1180 HARWOOD AVE. SUITE 3000
ALTAMONTE SPRINGS, FLORIDA 32714
TEL: 321.972.4466
WWW.JLCENG.COM
CA NO. 28730

JLC 17.0137.00

Adam Joseph Barney
P.E. #:69124

SUMMER BAY APTS. II
LAKE COUNTY, FL

Drawn:	MJR/KCM
Checked:	BLS/AJB
Approval:	BLS/AJB
Date:	11/10/2017
Project #:	5389

BUILDING TYPE 1 - ROOF - MECHANICAL

M2.05

REFERENCE NOTES: (X)

1. ROUTE EXHAUST DUCT FROM WALL MOUNTED EXHAUST FAN THROUGH TRUSS SPACE TO BUILDING SIDEWALL. TERMINATE DUCT AT EXTERIOR WALL CAP WITH BIRD SCREEN PER DIAGRAM ON SHEET M15.91. PRIME COAT AND PAINT WALL CAP TO MATCH BUILDING COLOR. SEE INDIVIDUAL UNIT PLANS FOR CONTINUATION.
2. ROUTE DRYER EXHAUST DUCT THROUGH TRUSS SPACE TO BUILDING SIDEWALL. TERMINATE DUCT AT EXTERIOR WALL CAP PER DIAGRAM ON SHEET M15.91. PRIME COAT AND PAINT WALL CAP TO MATCH BUILDING COLOR. SEE INDIVIDUAL UNIT PLAN FOR CONTINUATION.
3. ROUTE REFRIGERANT LINES WITHIN MECHANICAL CLOSET WALL UP TO ROOF MOUNTED CONDENSING UNIT. SEE PLUMBING PLANS FOR CONDENSATE LINE ROUTING.
4. PROVIDE HARD WIRED 120V CARBON MONOXIDE MONITOR EQUAL TO FIRST ALERT MODEL BRK-SC02B. INTERCONNECT TO DWELLING UNIT GARAGE EXHAUST FAN WITH BRK RELAY MODULE PER CARBON MONOXIDE ALARM WITH FAN RELAY DETAIL NUMBER 1 ON SHEET M15.71. FAN TO ACTIVATE UPON DETECTION OF CARBON MONOXIDE.
5. ROUTE 8"x8" GARAGE EXHAUST THROUGH TRUSS SPACE TO EXTERIOR WALL. PROVIDE WALL CAP PER DETAIL ON SHEET M15.82.
6. LOCATE MAU ABOVE DOOR. ROUTE CONDENSATE FROM MAU THRU WALL TO CONDENSATE RISER. SEE PLUMBING PLANS FOR CONDENSATE LINE ROUTING. ROUTE REFRIGERANT LINES IN WALL AND UP TO CONDENSING UNIT ON ROOF.

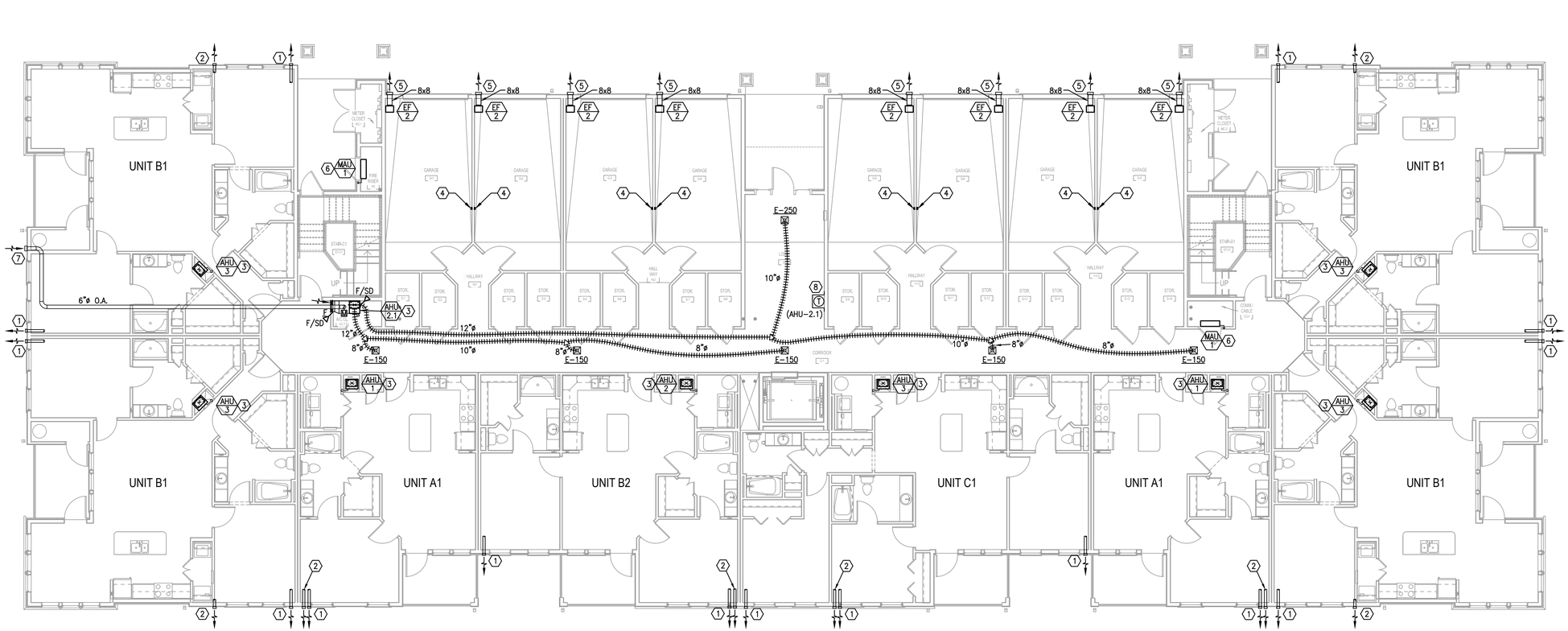

H1 BUILDING TYPE 2 - GROUND LEVEL - MECHANICAL
1/8" = 1'-0"

PERMIT REVIEW STAMP

ISSUE HISTORY

No.	Date	Description
1	10/06/2017	COORDINATION SET
2	11/10/2017	75%-90% REVIEW COORD. SET

REVISION HISTORY

No.	Date	Description

FUGLEBERG KOCH
2555 Temple Trail, Winter Park, FL 32789 (407) 629-0595
www.fuglebergkoch.com BR569

CONSULTANT
Joseph, Lawrence & Co
Consulting Engineers
1180 HARWOOD AVE. SUITE 3000
ALTAMONTE SPRINGS, FLORIDA 32714
TEL: 321.972.4466
WWW.JLCENG.COM
CA NO. 28730

JLC 17.0137.00

Adam Joseph Barney
P.E. #:69124

SUMMER BAY APTS. II
LAKE COUNTY, FL

Drawn:	MJR/KCM
Checked:	BLS/AJB
Approval:	BLS/AJB
Date:	11/10/2017
Project #:	5389

BUILDING TYPE 2 - GROUND FLOOR PLAN - MECHANICAL

M3.01

© 2015 These documents and their contents are the property of FUGLEBERG KOCH, PLLC - AA26002103, and are issued only for the specific project noted on these drawings. Any reproductions, revisions, or modifications of these documents without the expressed written consent of Fugleberg Koch, PLLC is prohibited by law.

REFERENCE NOTES: (X)

1. ROUTE EXHAUST DUCT FROM WALL MOUNTED EXHAUST FAN THROUGH TRUSS SPACE TO BUILDING SIDEWALL. TERMINATE DUCT AT EXTERIOR WALL CAP WITH BIRD SCREEN PER DIAGRAM ON SHEET M7.01. PRIME COAT AND PAINT WALL CAP TO MATCH BUILDING COLOR. SEE INDIVIDUAL UNIT PLANS FOR CONTINUATION.
2. ROUTE DRYER EXHAUST DUCT THROUGH TRUSS SPACE TO BUILDING SIDEWALL. TERMINATE DUCT AT EXTERIOR WALL CAP PER DIAGRAM ON SHEET M7.01. PRIME COAT AND PAINT WALL CAP TO MATCH BUILDING COLOR. SEE INDIVIDUAL UNIT PLAN FOR CONTINUATION.
3. ROUTE REFRIGERANT LINES WITHIN MECHANICAL CLOSET WALL UP TO ROOF MOUNTED CONDENSING UNIT. SEE PLUMBING PLANS FOR CONDENSATE LINE ROUTING.
4. ROUTE OUTSIDE AIR DUCT FROM CORRIDOR AIR HANDLER ABOVE CEILING TO BUILDING SIDEWALL. TERMINATE WITH WALL CAP PER DETAIL ON SHEET M6.01. PRIME COAT AND PAINT WALL CAP TO MATCH BUILDING COLOR. PROVIDE MOTORIZED DAMPER IN VERTICAL SECTION OF OUTSIDE AIR DUCT IN MECHANICAL ROOM. OUTSIDE AIR INTAKE TO BE A MINIMUM OF 10'-0" FROM ALL EXHAUST OUTLETS.
5. PROVIDE NEW FULLY DIGITAL 7 DAY PROGRAMMABLE TYPE THERMOSTAT WITH AUTO CHANGE OVER AND AUTO SET BACK. MOUNT THERMOSTAT 48" ABOVE FINISHED FLOOR. PROVIDE WITH CLEAR ACRYLIC LOCKING COVER.

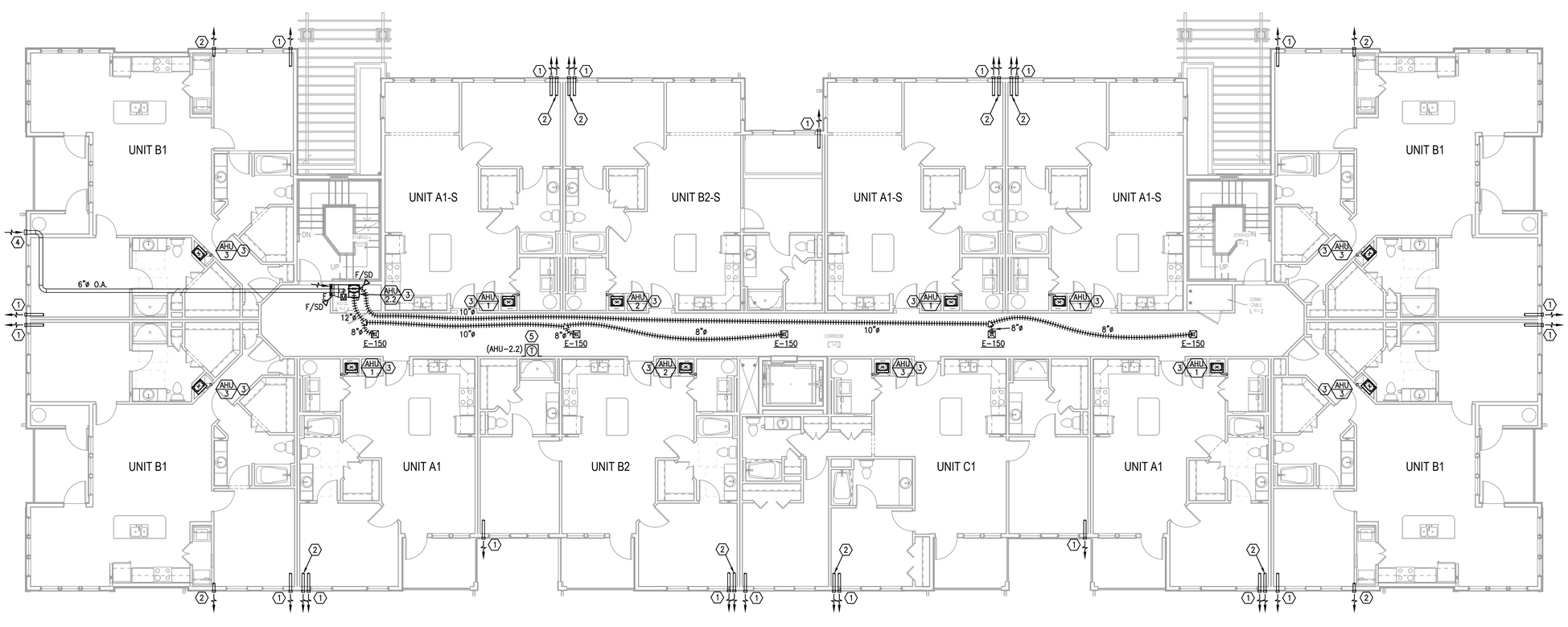

H1 BUILDING TYPE 2 - LEVEL 2 - MECHANICAL
1/8" = 1'-0"

PERMIT REVIEW STAMP

ISSUE HISTORY

No.	Date	Description
1	10/06/2017	COORDINATION SET
2	11/10/2017	75%-90% REVIEW COORD. SET

REVISION HISTORY

No.	Date	Description

© 2015 These documents and their contents are the property of FUGLEBERG KOCH, PLLC - AA26002103, and are issued only for the specific project noted on these drawings. Any reproductions, revisions, or modifications of these documents without the expressed written consent of Fugleberg Koch, PLLC is prohibited by law.

FUGLEBERG KOCH
2555 Temple Trail, Winter Park, FL 32789 (407) 629-0595
www.fuglebergkoch.com BR569

CONSULTANT
Joseph, Lawrence & Co
Consulting Engineers
1180 HARWOOD AVE. SUITE 3000
ALTAMONTE SPRINGS, FLORIDA 32714
TEL: 321.972.4466
WWW.JLCENG.COM
CA NO. 28730

JLC 17.0137.00

Adam Joseph Barney
P.E. #:69124

SUMMER BAY APTS. II
LAKE COUNTY, FL

Drawn:	MJR/KCM
Checked:	BLS/AJB
Approval:	BLS/AJB
Date:	11/10/2017
Project #:	5389

BUILDING TYPE 2 - LEVEL 2 PLAN - MECHANICAL

M3.02

REFERENCE NOTES: (X)

1. ROUTE EXHAUST DUCT FROM WALL MOUNTED EXHAUST FAN THROUGH TRUSS SPACE TO BUILDING SIDEWALL. TERMINATE DUCT AT EXTERIOR WALL CAP WITH BIRD SCREEN PER DIAGRAM ON SHEET M7.01. PRIME COAT AND PAINT WALL CAP TO MATCH BUILDING COLOR. SEE INDIVIDUAL UNIT PLANS FOR CONTINUATION.
2. ROUTE DRYER EXHAUST DUCT THROUGH TRUSS SPACE TO BUILDING SIDEWALL. TERMINATE DUCT AT EXTERIOR WALL CAP PER DIAGRAM ON SHEET M7.01. PRIME COAT AND PAINT WALL CAP TO MATCH BUILDING COLOR. SEE INDIVIDUAL UNIT PLAN FOR CONTINUATION.
3. ROUTE REFRIGERANT LINES WITHIN MECHANICAL CLOSET WALL UP TO ROOF MOUNTED CONDENSING UNIT. SEE PLUMBING PLANS FOR CONDENSATE LINE ROUTING.
4. ROUTE OUTSIDE AIR DUCT FROM CORRIDOR AIR HANDLER ABOVE CEILING TO BUILDING SIDEWALL. TERMINATE WITH WALL CAP PER DETAIL ON SHEET M6.01. PRIME COAT AND PAINT WALL CAP TO MATCH BUILDING COLOR. PROVIDE MOTORIZED DAMPER IN VERTICAL SECTION OF OUTSIDE AIR DUCT IN MECHANICAL ROOM. OUTSIDE AIR INTAKE TO BE A MINIMUM OF 10'-0" FROM ALL EXHAUST OUTLETS.
5. PROVIDE NEW FULLY DIGITAL 7 DAY PROGRAMMABLE TYPE THERMOSTAT WITH AUTO CHANGE OVER AND AUTO SET BACK. MOUNT THERMOSTAT 48" ABOVE FINISHED FLOOR. PROVIDE WITH CLEAR ACRYLIC LOCKING COVER.

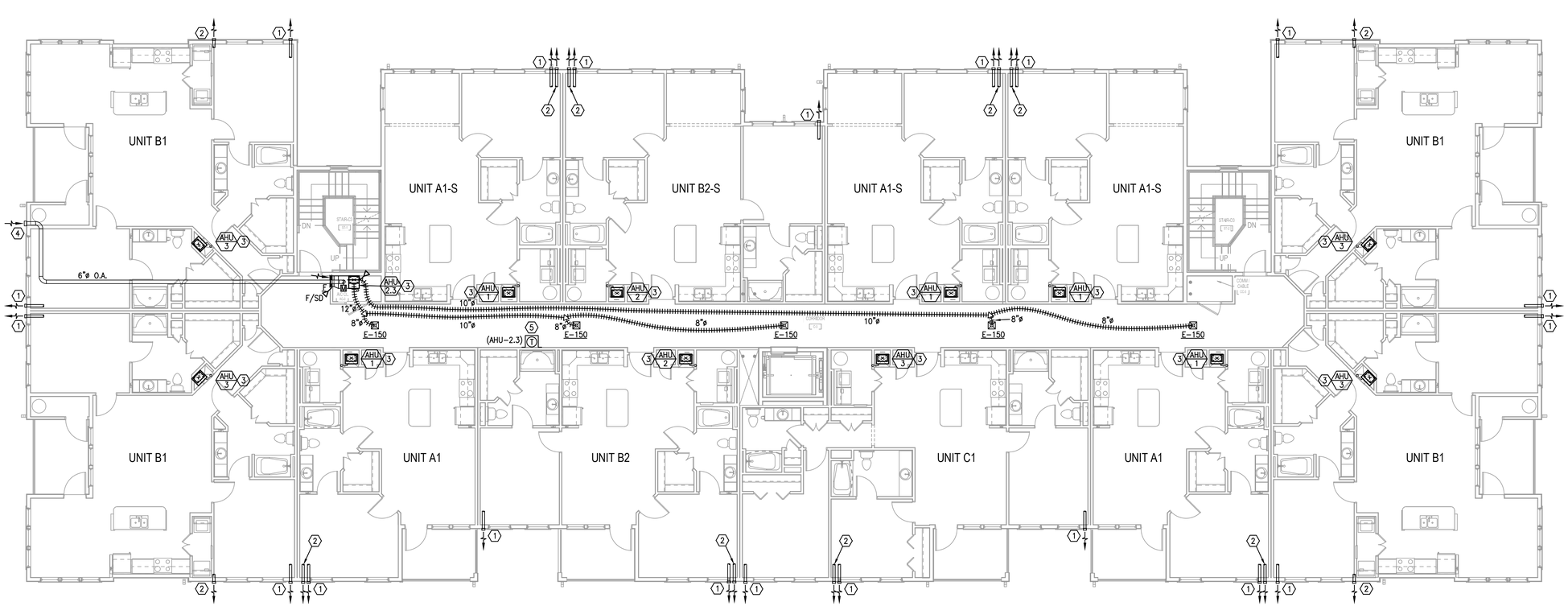

H1 BUILDING TYPE 2 - LEVEL 3 - MECHANICAL
1/8" = 1'-0"

PERMIT REVIEW STAMP

ISSUE HISTORY

No.	Date	Description
1	10/06/2017	COORDINATION SET
2	11/10/2017	75%-90% REVIEW COORD. SET

REVISION HISTORY

No.	Date	Description

FUGLEBERG KOCH
2555 Temple Trail, Winter Park, FL 32789 (407) 629-0595
www.fuglebergkoch.com BR569

CONSULTANT
Joseph, Lawrence & Co
Consulting Engineers
1180 HARWOOD AVE. SUITE 3000
ALTAMONTE SPRINGS, FLORIDA 32714
TEL: 321.972.4466
WWW.JLCENG.COM
CA NO. 28730

JLC 17.0137.00

Adam Joseph Barney
P.E. #:69124

SUMMER BAY APTS. II
LAKE COUNTY, FL

Drawn:	MJR/KCM
Checked:	BLS/AJB
Approval:	BLS/AJB
Date:	11/10/2017
Project #:	5389

BUILDING TYPE 2 - LEVEL 3
PLAN - MECHANICAL

M3.03

© 2015 These documents and their contents are the property of FUGLEBERG KOCH, PLLC - AA26002103, and are issued only for the specific project noted on these drawings. Any reproductions, revisions, or modifications of these documents without the expressed written consent of Fugleberg Koch, PLLC is prohibited by law.

REFERENCE NOTES: (X)

1. ROUTE EXHAUST DUCT FROM WALL MOUNTED EXHAUST FAN THROUGH TRUSS SPACE TO BUILDING SIDEWALL. TERMINATE DUCT AT EXTERIOR WALL CAP WITH BIRD SCREEN PER DIAGRAM ON SHEET M7.01. PRIME COAT AND PAINT WALL CAP TO MATCH BUILDING COLOR. SEE INDIVIDUAL UNIT PLANS FOR CONTINUATION.
2. ROUTE DRYER EXHAUST DUCT THROUGH TRUSS SPACE TO BUILDING SIDEWALL. TERMINATE DUCT AT EXTERIOR WALL CAP PER DIAGRAM ON SHEET M7.01. PRIME COAT AND PAINT WALL CAP TO MATCH BUILDING COLOR. SEE INDIVIDUAL UNIT PLAN FOR CONTINUATION.
3. ROUTE REFRIGERANT LINES WITHIN MECHANICAL CLOSET WALL UP TO ROOF MOUNTED CONDENSING UNIT. SEE PLUMBING PLANS FOR CONDENSATE LINE ROUTING.
4. ROUTE OUTSIDE AIR DUCT FROM CORRIDOR AIR HANDLER ABOVE CEILING TO BUILDING SIDEWALL. TERMINATE WITH WALL CAP PER DETAIL ON SHEET M6.01. PRIME COAT AND PAINT WALL CAP TO MATCH BUILDING COLOR. PROVIDE MOTORIZED DAMPER IN VERTICAL SECTION OF OUTSIDE AIR DUCT IN MECHANICAL ROOM. OUTSIDE AIR INTAKE TO BE A MINIMUM OF 10'-0" FROM ALL EXHAUST OUTLETS.
5. PROVIDE NEW FULLY DIGITAL 7 DAY PROGRAMMABLE TYPE THERMOSTAT WITH AUTO CHANGE OVER AND AUTO SET BACK. MOUNT THERMOSTAT 48" ABOVE FINISHED FLOOR. PROVIDE WITH CLEAR ACRYLIC LOCKING COVER.

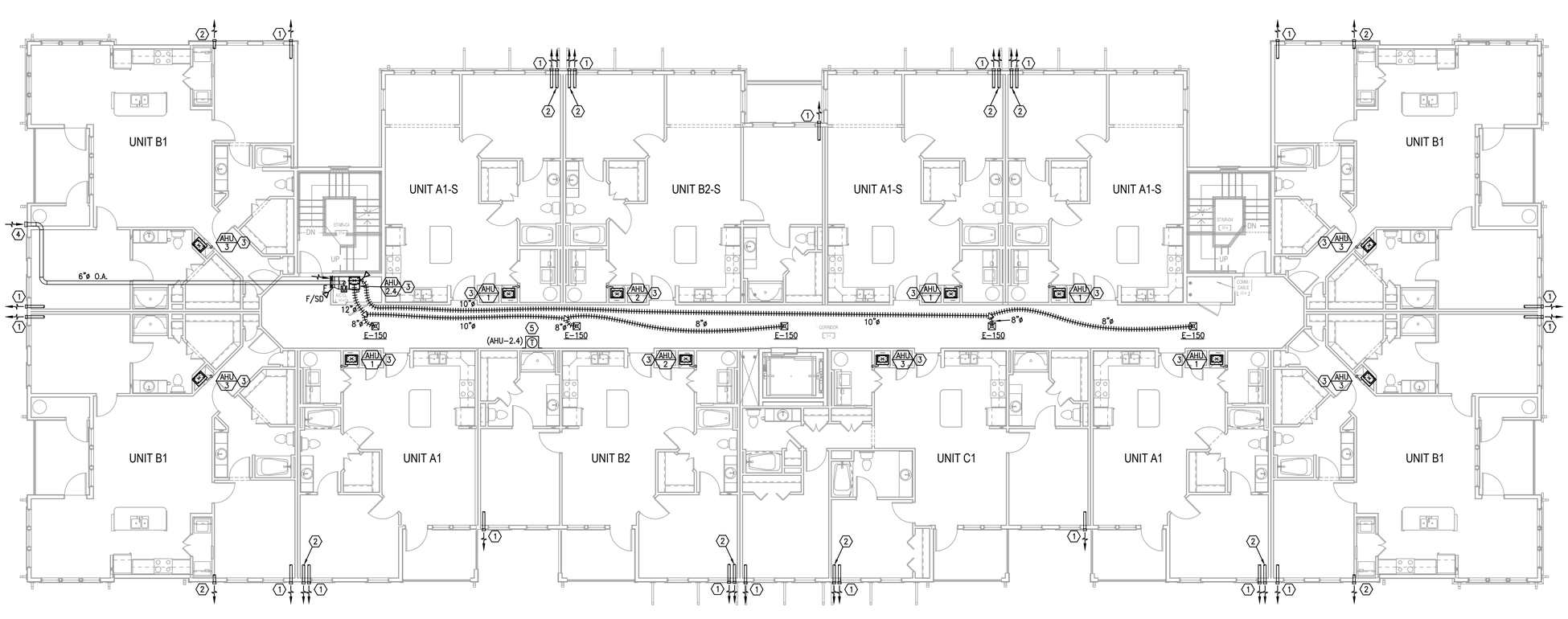

H1 BUILDING TYPE 2 - LEVEL 4 - MECHANICAL
1/8" = 1'-0"

PERMIT REVIEW STAMP

ISSUE HISTORY

No.	Date	Description
1	10/06/2017	COORDINATION SET
2	11/10/2017	75%-90% REVIEW COORD. SET

REVISION HISTORY

No.	Date	Description

© 2015 These documents and their contents are the property of FUGLEBERG KOCH, PLLC - AA26002103, and are issued only for the specific project noted on these drawings. Any reproductions, revisions, or modifications of these documents without the expressed written consent of Fugleberg Koch, PLLC is prohibited by law.

FUGLEBERG KOCH
2555 Temple Trail, Winter Park, FL 32789 (407) 629-0595
www.fuglebergkoch.com BR569

CONSULTANT
Joseph, Lawrence & Co
Consulting Engineers
1180 HARWOOD AVE. SUITE 3000
ALTAMONTE SPRINGS, FLORIDA 32714
TEL: 321.972.4466
WWW.JLCENG.COM
CA NO. 28730

JLC 17.0137.00

Adam Joseph Barney
P.E. #:69124

SUMMER BAY APTS. II
LAKE COUNTY, FL

Drawn:	MJR/KCM
Checked:	BLS/AJB
Approval:	BLS/AJB
Date:	11/10/2017
Project #:	5389

BUILDING TYPE 2 - LEVEL 4 PLAN - MECHANICAL

M3.04

REFERENCE NOTES: (X)

1. MOUNT NEW CONDENSING UNITS TO NEW ROOF MOUNTED RAIL SYSTEM. REFER TO DETAIL ON SHEET M15.92.
2. REFRIGERANT LINES UP THRU ROOF WITHIN STRUCTURAL BOX OUT FROM UNITS BELOW. PROVIDE REFRIGERANT LINE ROOF CAP PER DETAIL SHEET M15.92. KEEP PENETRATION THRU ROOF 3'-0" MINIMUM AWAY FROM VALLEYS AND GUTTERS.
3. SUPPORT REFRIGERANT PIPING ABOVE ROOF SURFACE PER ROOF SUPPORT DETAIL ON SHEET M15.92.
4. INSTALL 66"x18" ELEVATOR SHAFT RELIEF VENTILATION LOUVER ON SHAFT SIDEWALL. RUSKIN MODEL #ELF6425DD OR EQUIVALENT. THE AREA OF THE VENT SHALL BE NOT BE LESS THAN 3-1/2% OF THE AREA OF THE HOISTWAY NOR LESS THAN 3 SQUARE FEET FOR EACH ELEVATOR CAR. PROVIDE MOTORIZED DAMPER CONNECTED TO BUILDING FIRE ALARM SYSTEM. DAMPER TO REMAIN NO LESS THAN 1/3 OPEN DURING NORMAL OPERATION AND FULLY OPEN DURING A FIRE/ALARM EVENT.

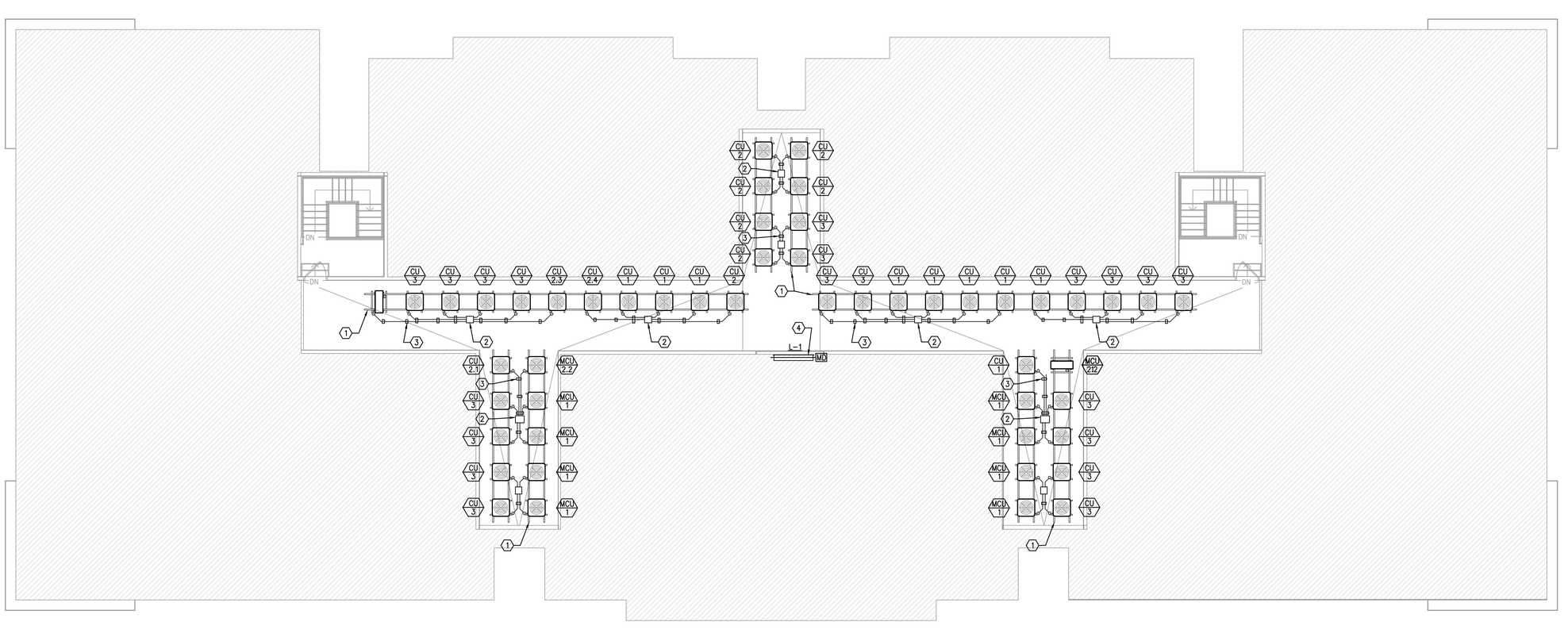

H1 BUILDING TYPE 2 - ROOF - MECHANICAL
1/8" = 1'-0"

PERMIT REVIEW STAMP

ISSUE HISTORY

No.	Date	Description
1	10/06/2017	COORDINATION SET
2	11/10/2017	75%-90% REVIEW COORD. SET

REVISION HISTORY

No.	Date	Description

© 2015 These documents and their contents are the property of FUGLEBERG KOCH, PLLC - AA26002103, and are issued only for the specific project noted on these drawings. Any reproductions, revisions, or modifications of these documents without the expressed written consent of Fugleberg Koch, PLLC is prohibited by law.

FUGLEBERG KOCH
2555 Temple Trail, Winter Park, FL 32789 (407) 629-0595
www. fuglebergkoch.com BR569

CONSULTANT
Joseph, Lawrence & Co
Consulting Engineers
1180 HARWOOD AVE. SUITE 3000
ALTAMONTE SPRINGS, FLORIDA 32714
TEL: 321.972.4466
WWW.JLCENG.COM
CA NO. 28730

JLC 17.0137.00

Adam Joseph Barney
P.E. #:69124

SUMMER BAY APTS. II
LAKE COUNTY, FL

Drawn:	MJR/KCM
Checked:	BLS/AJB
Approval:	BLS/AJB
Date:	11/10/2017
Project #:	5389

BUILDING TYPE 2 - ROOF - MECHANICAL

M3.05

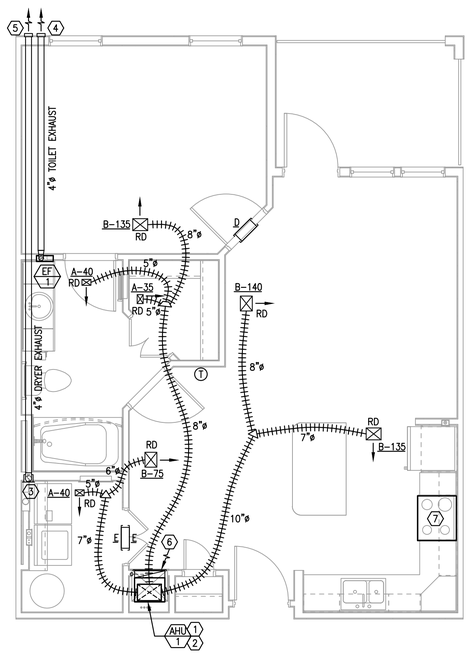

D1 ENLARGED TYPICAL UNIT TYPE 'A1' - MECHANICAL
1/4" = 1'-0"

NATURAL VENTILATION CALC. UNIT A1	
UNIT FLOOR AREA:	765
MIN. VENTILATION AREA: (UNIT AREA * 4%)	30.6
ACTUAL VENTILATION AREA: (OPERABLE OPENING AREA)	78.0

NATURAL VENTILATION CALCULATIONS BASED ON FLORIDA MECHANICAL CODE CHAPTER 4, SECTION 402.

ALL AREAS CALCULATED IN SQUARE FEET

DRYER VENT LENGTH CALC. UNIT A1	
HORIZONTAL LENGTH:	24
VERTICAL LENGTH:	7
90° (5 FT EACH):	5
45° (2.5 FT EACH):	0
TOTAL EQ. LENGTH (FT):	36

THIS DRYER VENT TOTAL EQUIVALENT LENGTH EXCEEDS THE CODE MAXIMUM OF 35 FEET, ANY CLOTHES DRYER CONNECTED TO THE DRYER EXHAUST SYSTEM IS REQUIRED TO HAVE A MANUFACTURERS SERVICE RATING THAT MEETS OR EXCEEDS THE OVERALL DRYER VENT LENGTH OF THIS SYSTEM AS CALCULATED PER THE DRYER MANUFACTURER REQUIREMENTS.

MECHANICAL CONTRACTOR TO PROVIDE PERMANENTLY AFFIXED LABEL IDENTIFYING THE TOTAL EQUIVALENT LENGTH OF THE UNIT DRYER EXHAUST SYSTEM AS LISTED ABOVE WITHIN 6 FEET OF THE DRYER EXHAUST DUCTWORK CONNECTION STATING "THIS DRYER VENT IS 36' LONG AND REQUIRES A DRYER CAPABLE OF MEETING THIS DRYER VENT LENGTH".

NATURAL VENTILATION CALC. UNIT A1S	
UNIT FLOOR AREA:	765
MIN. VENTILATION AREA: (UNIT AREA * 4%)	30.6
ACTUAL VENTILATION AREA: (OPERABLE OPENING AREA)	78.0

NATURAL VENTILATION CALCULATIONS BASED ON FLORIDA MECHANICAL CODE CHAPTER 4, SECTION 402.

ALL AREAS CALCULATED IN SQUARE FEET

DRYER VENT LENGTH CALC. UNIT A1S	
HORIZONTAL LENGTH:	24
VERTICAL LENGTH:	7
90° (5 FT EACH):	5
45° (2.5 FT EACH):	0
TOTAL EQ. LENGTH (FT):	36

THIS DRYER VENT TOTAL EQUIVALENT LENGTH EXCEEDS THE CODE MAXIMUM OF 35 FEET, ANY CLOTHES DRYER CONNECTED TO THE DRYER EXHAUST SYSTEM IS REQUIRED TO HAVE A MANUFACTURERS SERVICE RATING THAT MEETS OR EXCEEDS THE OVERALL DRYER VENT LENGTH OF THIS SYSTEM AS CALCULATED PER THE DRYER MANUFACTURER REQUIREMENTS.

MECHANICAL CONTRACTOR TO PROVIDE PERMANENTLY AFFIXED LABEL IDENTIFYING THE TOTAL EQUIVALENT LENGTH OF THE UNIT DRYER EXHAUST SYSTEM AS LISTED ABOVE WITHIN 6 FEET OF THE DRYER EXHAUST DUCTWORK CONNECTION STATING "THIS DRYER VENT IS 36' LONG AND REQUIRES A DRYER CAPABLE OF MEETING THIS DRYER VENT LENGTH".

NATURAL VENTILATION CALC. UNIT S1	
UNIT FLOOR AREA:	579
MIN. VENTILATION AREA: (UNIT AREA * 4%)	23.1
ACTUAL VENTILATION AREA: (OPERABLE OPENING AREA)	78.0

NATURAL VENTILATION CALCULATIONS BASED ON FLORIDA MECHANICAL CODE CHAPTER 4, SECTION 402.

ALL AREAS CALCULATED IN SQUARE FEET

DRYER VENT LENGTH CALC. UNIT S1	
HORIZONTAL LENGTH:	20
VERTICAL LENGTH:	7
90° (5 FT EACH):	10
45° (2.5 FT EACH):	0
TOTAL EQ. LENGTH (FT):	37

THIS DRYER VENT TOTAL EQUIVALENT LENGTH EXCEEDS THE CODE MAXIMUM OF 35 FEET, ANY CLOTHES DRYER CONNECTED TO THE DRYER EXHAUST SYSTEM IS REQUIRED TO HAVE A MANUFACTURERS SERVICE RATING THAT MEETS OR EXCEEDS THE OVERALL DRYER VENT LENGTH OF THIS SYSTEM AS CALCULATED PER THE DRYER MANUFACTURER REQUIREMENTS.

MECHANICAL CONTRACTOR TO PROVIDE PERMANENTLY AFFIXED LABEL IDENTIFYING THE TOTAL EQUIVALENT LENGTH OF THE UNIT DRYER EXHAUST SYSTEM AS LISTED ABOVE WITHIN 6 FEET OF THE DRYER EXHAUST DUCTWORK CONNECTION STATING "THIS DRYER VENT IS 37' LONG AND REQUIRES A DRYER CAPABLE OF MEETING THIS DRYER VENT LENGTH".

REFERENCE NOTES: X

1. MOUNT AHU PER CLOSET MOUNTED AHU DETAIL ON SHEET M6.02.
2. ROUTE REFRIGERANT LINES UP TO CONDENSING UNITS ON ROOF. ROUTE CONDENSATE DRAIN LINES WITHIN MECHANICAL CLOSET WALL. SEE PLUMBING PLANS FOR CONDENSATE LINE CONTINUATION. ROUTE REFRIGERANT LINES PER DIAGRAM M7.01.
3. INSTALL DRYER EXHAUST WALL CONNECTION BOX PER DETAIL SHEET M6.01.
4. ROUTE EXHAUST DUCT FROM WALL MOUNTED EXHAUST FAN THROUGH TRUSS SPACE TO BUILDING SIDEWALL PER DETAIL ON SHEET M6.01. TERMINATE DUCT AT EXTERIOR WALL CAP PER DIAGRAM SHEET M7.01.
5. ROUTE DRYER EXHAUST DUCT THROUGH TRUSS SPACE TO BUILDNG SIDEWALL PER DETAIL SHEET M6.01 TERMINATE DUCT AT EXTERIOR WALL CAP PER DIAGRAM SHEET M7.01.
6. PROVIDE FACTORY WALL PANEL FOR RETURN AIR AND ACCESS.
7. DUCTLESS RANGE HOOD.

GENERAL NOTES:

1. PROVIDE 1" DOOR UNDER CUT IN ALL BEDROOMS IN ADDITION TO TRANSFER GRILLE.
2. ALL EXHAUST OUTLETS TO BE FARTHER THAN 3 FEET AWAY FROM ANY OPERABLE WINDOWS.

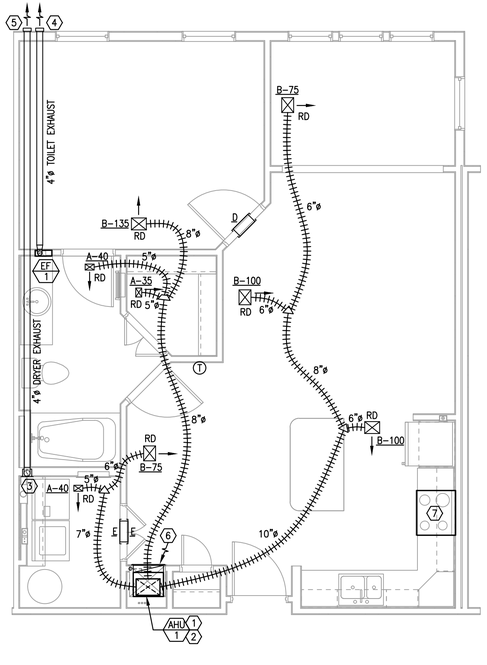

H1 ENLARGED TYPICAL UNIT TYPE 'A1S' - MECHANICAL
1/4" = 1'-0"

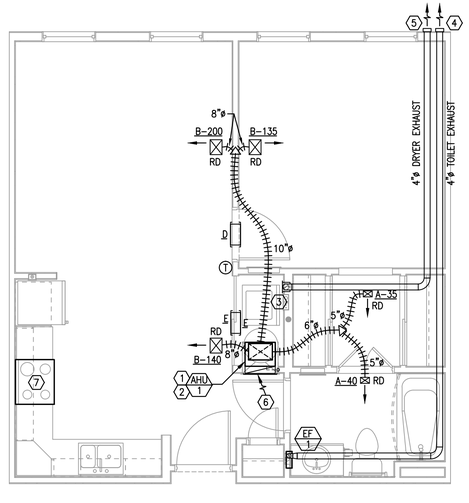

H5 ENLARGED TYPICAL UNIT TYPE 'S1' - MECHANICAL
1/4" = 1'-0"

PERMIT REVIEW STAMP

ISSUE HISTORY

No.	Date	Description
1	10/06/2017	COORDINATION SET
2	11/10/2017	75%-90% REVIEW COORD. SET

REVISION HISTORY

No.	Date	Description

© 2015 These documents and their contents are the property of FUGLEBERG KOCH, PLLC • LA0001035 and are issued only for the specific project noted on these drawings. Any reproductions, revisions, or modifications of these documents without the expressed written consent of Fugleberg Koch, PLLC is prohibited by law.

FUGLEBERG KOCH
2555 Temple Trail, Winter Park, FL 32789 (407) 629-0595
www.fuglebergkoch.com BR569

CONSULTANT
Joseph, Lawrence & Co Consulting Engineers
1180 HARWOOD AVE. SUITE 3000
ALTAMONTE SPRINGS, FLORIDA 32714
TEL: 321.972.4466
WWW.JLCENG.COM
CA NO. 28730

JLC 17.0137.00

Adam Joseph Barney
P.E. #:69124

SUMMER BAY APTS. II
LAKE COUNTY, FL

Drawn:	MJR/KCM
Checked:	BLS/AJB
Approval:	BLS/AJB
Date:	11/10/2017
Project #:	5389

ENLARGED TYPICAL UNIT PLANS - MECHANICAL

M4.01

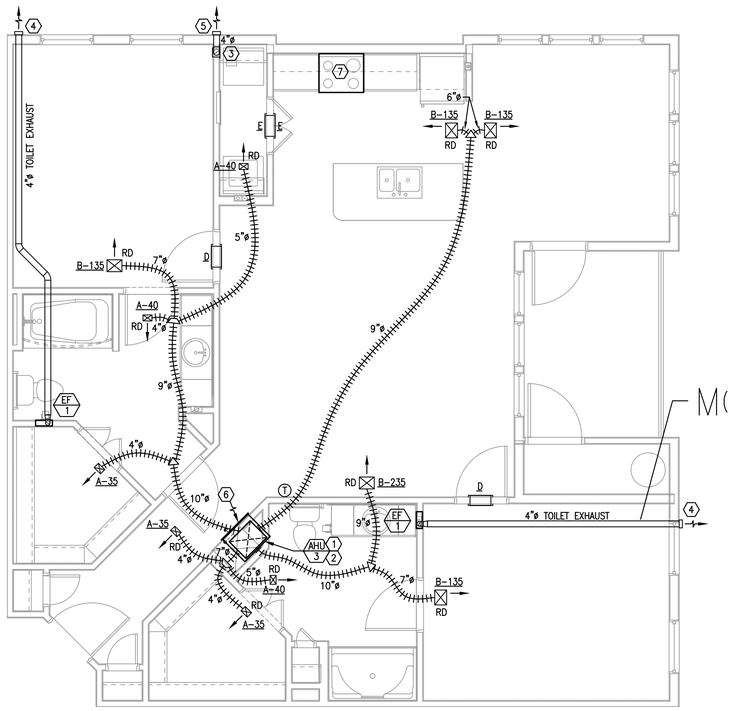

D1 ENLARGED TYPICAL UNIT TYPE 'B1' - MECHANICAL

1/4" = 1'-0"

NATURAL VENTILATION CALC. UNIT B1	
UNIT FLOOR AREA:	1,191
MIN. VENTILATION AREA: (UNIT AREA * 4%)	47.6
ACTUAL VENTILATION AREA: (OPERABLE OPENING AREA)	78.0

NATURAL VENTILATION CALCULATIONS BASED ON FLORIDA MECHANICAL CODE CHAPTER 4, SECTION 402.

ALL AREAS CALCULATED IN SQUARE FEET

DRYER VENT LENGTH CALC. UNIT A1	
HORIZONTAL LENGTH:	24
VERTICAL LENGTH:	7
90° (5 FT EACH):	5
45° (2.5 FT EACH):	0
TOTAL EQ. LENGTH (FT):	36

THIS DRYER VENT TOTAL EQUIVALENT LENGTH EXCEEDS THE CODE MAXIMUM OF 35 FEET, ANY CLOTHES DRYER CONNECTED TO THE DRYER EXHAUST SYSTEM IS REQUIRED TO HAVE A MANUFACTURERS SERVICE RATING THAT MEETS OR EXCEEDS THE OVERALL DRYER VENT LENGTH OF THIS SYSTEM AS CALCULATED PER THE DRYER MANUFACTURER REQUIREMENTS.

MECHANICAL CONTRACTOR TO PROVIDE PERMANENTLY AFFIXED LABEL IDENTIFYING THE TOTAL EQUIVALENT LENGTH OF THE UNIT DRYER EXHAUST SYSTEM AS LISTED ABOVE WITHIN 6 FEET OF THE DRYER EXHAUST DUCTWORK CONNECTION STATING "THIS DRYER VENT IS 36' LONG AND REQUIRES A DRYER CAPABLE OF MEETING THIS DRYER VENT LENGTH".

NATURAL VENTILATION CALC. UNIT B2S	
UNIT FLOOR AREA:	1,042
MIN. VENTILATION AREA: (UNIT AREA * 4%)	41.6
ACTUAL VENTILATION AREA: (OPERABLE OPENING AREA)	78.0

NATURAL VENTILATION CALCULATIONS BASED ON FLORIDA MECHANICAL CODE CHAPTER 4, SECTION 402.

ALL AREAS CALCULATED IN SQUARE FEET

DRYER VENT LENGTH CALC. UNIT A1S	
HORIZONTAL LENGTH:	24
VERTICAL LENGTH:	7
90° (5 FT EACH):	5
45° (2.5 FT EACH):	0
TOTAL EQ. LENGTH (FT):	36

THIS DRYER VENT TOTAL EQUIVALENT LENGTH EXCEEDS THE CODE MAXIMUM OF 35 FEET, ANY CLOTHES DRYER CONNECTED TO THE DRYER EXHAUST SYSTEM IS REQUIRED TO HAVE A MANUFACTURERS SERVICE RATING THAT MEETS OR EXCEEDS THE OVERALL DRYER VENT LENGTH OF THIS SYSTEM AS CALCULATED PER THE DRYER MANUFACTURER REQUIREMENTS.

MECHANICAL CONTRACTOR TO PROVIDE PERMANENTLY AFFIXED LABEL IDENTIFYING THE TOTAL EQUIVALENT LENGTH OF THE UNIT DRYER EXHAUST SYSTEM AS LISTED ABOVE WITHIN 6 FEET OF THE DRYER EXHAUST DUCTWORK CONNECTION STATING "THIS DRYER VENT IS 36' LONG AND REQUIRES A DRYER CAPABLE OF MEETING THIS DRYER VENT LENGTH".

NATURAL VENTILATION CALC. UNIT B2	
UNIT FLOOR AREA:	965
MIN. VENTILATION AREA: (UNIT AREA * 4%)	38.6
ACTUAL VENTILATION AREA: (OPERABLE OPENING AREA)	78.0

NATURAL VENTILATION CALCULATIONS BASED ON FLORIDA MECHANICAL CODE CHAPTER 4, SECTION 402.

ALL AREAS CALCULATED IN SQUARE FEET

DRYER VENT LENGTH CALC. UNIT S1	
HORIZONTAL LENGTH:	20
VERTICAL LENGTH:	7
90° (5 FT EACH):	10
45° (2.5 FT EACH):	0
TOTAL EQ. LENGTH (FT):	37

THIS DRYER VENT TOTAL EQUIVALENT LENGTH EXCEEDS THE CODE MAXIMUM OF 35 FEET, ANY CLOTHES DRYER CONNECTED TO THE DRYER EXHAUST SYSTEM IS REQUIRED TO HAVE A MANUFACTURERS SERVICE RATING THAT MEETS OR EXCEEDS THE OVERALL DRYER VENT LENGTH OF THIS SYSTEM AS CALCULATED PER THE DRYER MANUFACTURER REQUIREMENTS.

MECHANICAL CONTRACTOR TO PROVIDE PERMANENTLY AFFIXED LABEL IDENTIFYING THE TOTAL EQUIVALENT LENGTH OF THE UNIT DRYER EXHAUST SYSTEM AS LISTED ABOVE WITHIN 6 FEET OF THE DRYER EXHAUST DUCTWORK CONNECTION STATING "THIS DRYER VENT IS 37' LONG AND REQUIRES A DRYER CAPABLE OF MEETING THIS DRYER VENT LENGTH".

REFERENCE NOTES: (X)

1. MOUNT AHU PER CLOSET MOUNTED AHU DETAIL ON SHEET M6.02.
2. ROUTE REFRIGERANT LINES UP TO CONDENSING UNITS ON ROOF. ROUTE CONDENSATE DRAIN LINES WITHIN MECHANICAL CLOSET WALL. SEE PLUMBING PLANS FOR CONDENSATE LINE CONTINUATION. ROUTE REFRIGERANT LINES PER DIAGRAM M7.01.
3. INSTALL DRYER EXHAUST WALL CONNECTION BOX PER DETAIL SHEET M6.01.
4. ROUTE EXHAUST DUCT FROM WALL MOUNTED EXHAUST FAN THROUGH TRUSS SPACE TO BUILDING SIDEWALL PER DETAIL ON SHEET M6.01. TERMINATE DUCT AT EXTERIOR WALL CAP PER DIAGRAM SHEET M7.01.
5. ROUTE DRYER EXHAUST DUCT THROUGH TRUSS SPACE TO BUILDING SIDEWALL PER DETAIL SHEET M6.01 TERMINATE DUCT AT EXTERIOR WALL CAP PER DIAGRAM SHEET M7.01.
6. PROVIDE FACTORY WALL PANEL FOR RETURN AIR AND ACCESS.
7. DUCTLESS RANGE HOOD.

GENERAL NOTES:

1. PROVIDE 1" DOOR UNDER CUT IN ALL BEDROOMS IN ADDITION TO TRANSFER GRILLE.
2. ALL EXHAUST OUTLETS TO BE FARTHER THAN 3 FEET AWAY FROM ANY OPERABLE WINDOWS.

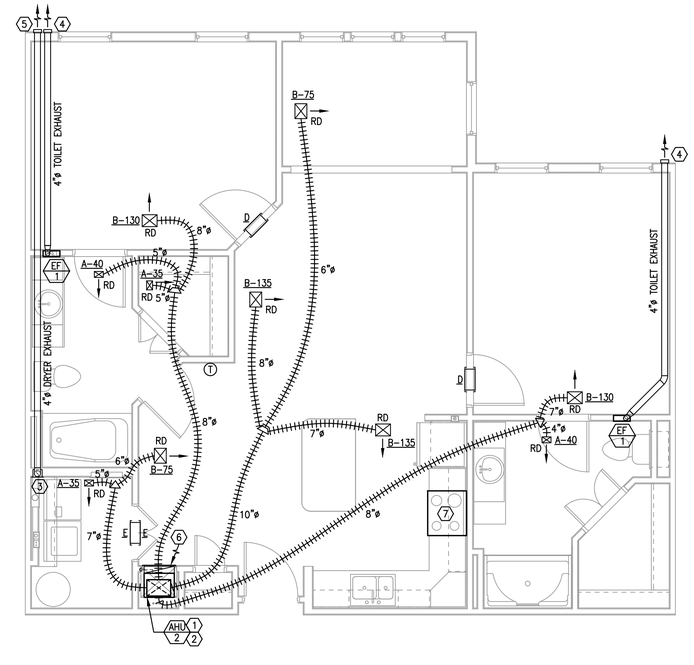

H1 ENLARGED TYPICAL UNIT TYPE 'B2S' - MECHANICAL

1/4" = 1'-0"

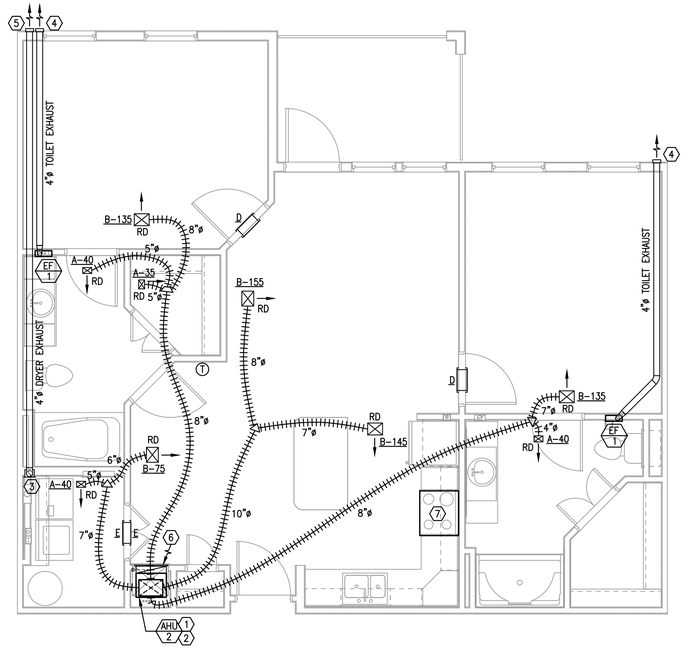

H5 ENLARGED TYPICAL UNIT TYPE 'B2' - MECHANICAL

1/4" = 1'-0"

PERMIT REVIEW STAMP

ISSUE HISTORY

No.	Date	Description
1	10/06/2017	COORDINATION SET
2	11/10/2017	75%-90% REVIEW COORD. SET

REVISION HISTORY

No.	Date	Description

© 2015 These documents and their contents are the property of FUGLEBERG KOCH, P.L.C. (A0000133) and are issued only for the specific project noted on these drawings. Any reproductions, revisions, or modifications of these documents without the expressed written consent of Fugleberg Koch, P.L.C. is prohibited by law.

FUGLEBERG KOCH

2555 Temple Trail, Winter Park, FL 32789 (407) 629-0595
www.fuglebergkoch.com BR569

CONSULTANT

Joseph, Lawrence & Co
Consulting Engineers
1180 HARWOOD AVE. SUITE 3000
ALTAMONTE SPRINGS, FLORIDA 32714
TEL: 321.972.4466
WWW.JLCENG.COM
CA NO. 28730

JLC 17.0137.00

Adam Joseph Barney
P.E. #:69124

SUMMER BAY APTS. II

LAKE COUNTY, FL

Drawn:	MJR/KCM
Checked:	BLS/AJB
Approval:	BLS/AJB
Date:	11/10/2017
Project #:	5389

ENLARGED TYPICAL UNIT PLANS - MECHANICAL

M4.02

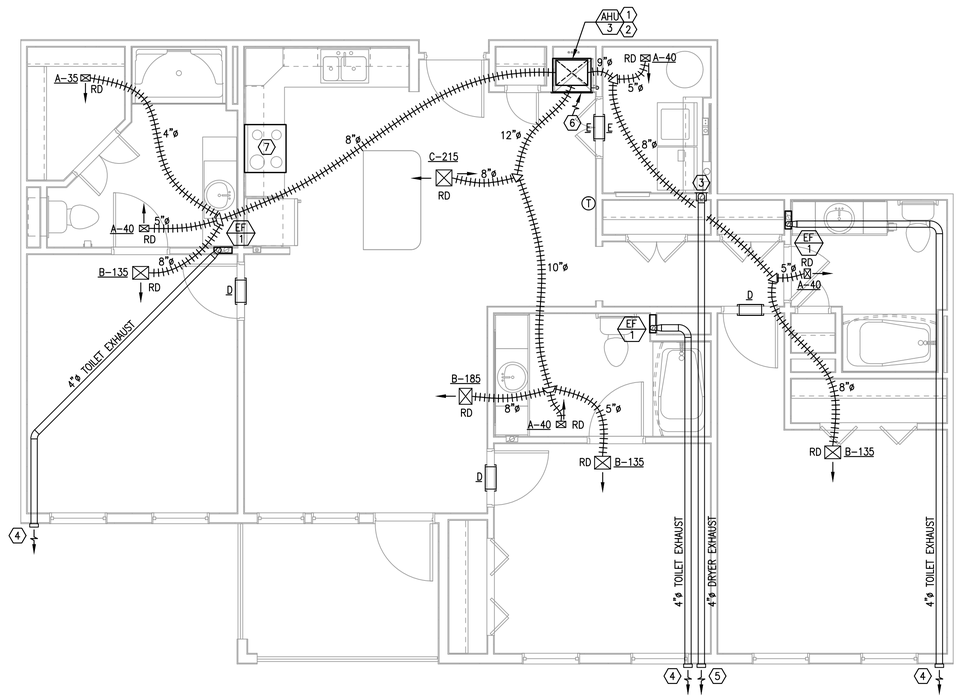

F4 ENLARGED TYPICAL UNIT TYPE 'C1' - MECHANICAL

1/4" = 1'-0"

NATURAL VENTILATION CALC.	
UNIT C1	
UNIT FLOOR AREA:	1,260
MIN. VENTILATION AREA: (UNIT AREA * 4%)	50.4
ACTUAL VENTILATION AREA: (OPERABLE OPENING AREA)	78.0

NATURAL VENTILATION CALCULATIONS BASED ON FLORIDA MECHANICAL CODE CHAPTER 4, SECTION 402.

ALL AREAS CALCULATED IN SQUARE FEET

DRYER VENT LENGTH CALC.	
UNIT C1	
HORIZONTAL LENGTH:	24
VERTICAL LENGTH:	7
90° (5 FT EACH):	5
45° (2.5 FT EACH):	0
TOTAL EQ. LENGTH (FT):	36

THIS DRYER VENT TOTAL EQUIVALENT LENGTH EXCEEDS THE CODE MAXIMUM OF 35 FEET, ANY CLOTHES DRYER CONNECTED TO THE DRYER EXHAUST SYSTEM IS REQUIRED TO HAVE A MANUFACTURERS SERVICE RATING THAT MEETS OR EXCEEDS THE OVERALL DRYER VENT LENGTH OF THIS SYSTEM AS CALCULATED PER THE DRYER MANUFACTURER REQUIREMENTS.

MECHANICAL CONTRACTOR TO PROVIDE PERMANENTLY AFFIXED LABEL IDENTIFYING THE TOTAL EQUIVALENT LENGTH OF THE UNIT DRYER EXHAUST SYSTEM AS LISTED ABOVE WITHIN 6 FEET OF THE DRYER EXHAUST DUCTWORK CONNECTION STATING "THIS DRYER VENT IS 36' LONG AND REQUIRES A DRYER CAPABLE OF MEETING THIS DRYER VENT LENGTH".

REFERENCE NOTES: ⟨X⟩

1. MOUNT AHU PER CLOSET MOUNTED AHU DETAIL ON SHEET M6.02.
2. ROUTE REFRIGERANT LINES UP TO CONDENSING UNITS ON ROOF. ROUTE CONDENSATE DRAIN LINES WITHIN MECHANICAL CLOSET WALL. SEE PLUMBING PLANS FOR CONDENSATE LINE CONTINUATION. ROUTE REFRIGERANT LINES PER DIAGRAM M7.01.
3. INSTALL DRYER EXHAUST WALL CONNECTION BOX PER DETAIL SHEET M6.01.
4. ROUTE EXHAUST DUCT FROM WALL MOUNTED EXHAUST FAN THROUGH TRUSS SPACE TO BUILDING SIDEWALL PER DETAIL ON SHEET M6.01. TERMINATE DUCT AT EXTERIOR WALL CAP PER DIAGRAM SHEET M7.01.
5. ROUTE DRYER EXHAUST DUCT THROUGH TRUSS SPACE TO BUILDING SIDEWALL PER DETAIL SHEET M6.01 TERMINATE DUCT AT EXTERIOR WALL CAP PER DIAGRAM SHEET M7.01.
6. PROVIDE FACTORY WALL PANEL FOR RETURN AIR AND ACCESS.
7. DUCTLESS RANGE HOOD.

GENERAL NOTES:

1. PROVIDE 1" DOOR UNDER CUT IN ALL BEDROOMS IN ADDITION TO TRANSFER GRILLE.
2. ALL EXHAUST OUTLETS TO BE FARTHER THAN 3 FEET AWAY FROM ANY OPERABLE WINDOWS.

PERMIT REVIEW STAMP

ISSUE HISTORY

No.	Date	Description
1	10/06/2017	COORDINATION SET
2	11/10/2017	75%-90% REVIEW COORD. SET

REVISION HISTORY

No.	Date	Description

© 2015 These documents and their contents are the property of FUGLEBERG KOCH, P.L.C. +42000103 and are issued only for the specific project named on these drawings. Any reproductions, revisions, or modifications of these documents without the expressed written consent of Fugleberg Koch, P.L.C. is prohibited by law.

FUGLEBERG KOCH

2555 Temple Trail, Winter Park, FL 32789 (407) 629-0595
www.fuglebergkoch.com BR569

CONSULTANT

Joseph, Lawrence & Co
Consulting Engineers
1180 HARWOOD AVE. SUITE 3000
ALTAMONTE SPRINGS, FLORIDA 32714
TEL: 321.972.4466
WWW.JLCENG.COM
CA NO. 28730

JLC 17.0137.00

Adam Joseph Barney
P.E. #:69124

SUMMER BAY APTS. II

LAKE COUNTY, FL

Drawn:	MJR/KCM
Checked:	BLS/AJB
Approval:	BLS/AJB
Date:	11/10/2017
Project #:	5389

ENLARGED TYPICAL UNIT PLANS - MECHANICAL

M4.03

APARTMENT DX SPLIT AIR HANDLING UNIT SCHEDULE

MARK	LOCATION SERVED	FAN					COOLING COIL			FILTERS			ELECTRIC HEATING COIL			SINGLE POINT UNIT ELEC. REQUIREMENTS		UNIT INFORMATION				
		TOTAL AIR FLOW (CFM)	OUTSIDE AIR FLOW (CFM)	EXTERNAL STATIC PRESS. (IN.WG.)	DRIVE TYPE	HP	ENTERING AIR TEMP. (F° DB/WB)	LEAVING AIR TEMP. (F° DB/WB)	TOTAL CAPACITY (BTUH)	TYPE	EFFICIENCY	THICKNESS	NO. OF STAGES	TOTAL KW	VOLTAGE/ PHASE	SINGLE CIRCUIT MCA	SINGLE CIRCUIT MOCP	UNIT SIZE (H"xW"xD")	OPERATING WEIGHT (LBS.)	MANUFACTURER	MODEL NUMBER	NOTES
AHU-1	UNITS A1, A1S, S1	600	–	0.3	DIRECT	1/5	80.0/67.0	56.0/54.0	18,000	THROWAWAY	25%-30%	1"	1	5	208/1	23.6	30	36"x20"x16"	99	GOODMAN OR EQUAL	AWUF180516AA	1, 2
AHU-2	UNITS B2, B2S	800	–	0.3	DIRECT	1/5	80.0/67.0	56.0/54.0	24,000	THROWAWAY	25%-30%	1"	1	5	208/1	23.6	30	36"x20"x16"	99	GOODMAN OR EQUAL	AWUF240516AA	1, 2
AHU-3	UNITS B1, C1	1,000	–	0.3	DIRECT	1/3	80.0/67.0	56.0/54.0	28,000	THROWAWAY	25%-30%	1"	1	5	208/1	23.6	30	36"x24"x21"	110	GOODMAN OR EQUAL	AWUF300516AA	1, 2

NOTES:
1. PROVIDE COMPLETE WITH PULL TYPE DISCONNECT SWITCH AND 7-DAY PROGRAMMABLE THERMOSTAT WITH NIGHT SET BACK. (SEE OWNER)
2. ROUTE AND SIZE REFRIGERANT LINES PER MANUFACTURES REQUIREMENTS.

APARTMENT DX SPLIT CONDENSING UNIT SCHEDULE (STRAIGHT COOL)

MARK	LOCATION	COMPRESSOR			CONDENSER FANS		ELECTRICAL							UNIT INFORMATION		MANUFACTURER	MODEL NUMBER	NOTES
		OUTDOOR DESIGN TEMP. (F°)	QTY.	CAPACITY STEPS %	QTY.	NOMINAL HP	VOLTAGE/ PHASE	COMPRESSOR RLA EACH	CONDENSER FANS QTY.	CONDENSER FANS FLA (EA.)	MCA	MOCP	SEER	UNIT SIZE (H"xW"xD")	OPERATING WEIGHT (LBS.)			
CU-1	EXTERIOR	95°	1	100	1	1/8	208/1	6.0	1	0.7	8.2	15	14.0	34"x29"x29"	131	GOODMAN OR EQUAL	GSX140181AA	1
CU-2	EXTERIOR	95°	1	100	1	1/8	208/1	7.7	1	0.7	10.3	15	14.0	38"x29"x29"	131	GOODMAN OR EQUAL	GSX140241AA	1
CU-3	EXTERIOR	95°	1	100	1	1/6	208/1	10.5	1	0.95	14.1	20	14.0	38"x29"x29"	162	GOODMAN OR EQUAL	GSX140301AA	1

NOTES:
1. PROVIDE COMPLETE WITH PULL TYPE DISCONNECT SWITCH, TIME DELAY RELAY AND ANTI-SHORT CYCLE TIMER.

DX SPLIT AIR HANDLING UNIT SCHEDULE (CORRIDORS)

MARK	LOCATION SERVED	FAN					COOLING COIL			FILTERS			ELECTRIC HEATING COIL			SINGLE POINT UNIT ELEC. REQUIREMENTS		UNIT INFORMATION				
		TOTAL AIR FLOW (CFM)	OUTSIDE AIR FLOW (CFM)	EXTERNAL STATIC PRESS. (IN.WG.)	DRIVE TYPE	HP	ENTERING AIR TEMP. (F° DB/WB)	LEAVING AIR TEMP. (F° DB/WB)	TOTAL CAPACITY (BTUH)	TYPE	EFFICIENCY	THICKNESS	NO. OF STAGES	TOTAL KW	VOLTAGE/ PHASE	SINGLE CIRCUIT MCA	SINGLE CIRCUIT MOCP	UNIT SIZE (H"xW"xD")	OPERATING WEIGHT (LBS.)	MANUFACTURER	MODEL NUMBER	NOTES
AHU-1.1	LOBBY, CORRIDOR	1,000	90	0.3	DIRECT	1/3	77.6/64.7	56.0/54.0	30,000	THROWAWAY	25%-30%	1"	1	5	208/1	27	30	45"x17.5"x21"	129	GOODMAN	ASPT30D14	1, 2
AHU-1.2	CORRIDOR	800	60	0.3	DIRECT	1/3	78.0/65.0	56.0/54.0	24,000	THROWAWAY	25%-30%	1"	1	5	208/1	27	30	54"x24"x21"	129	GOODMAN	ASPT24B14	1, 2
AHU-1.3	CORRIDOR	800	60	0.3	DIRECT	1/3	78.0/65.0	56.0/54.0	24,000	THROWAWAY	25%-30%	1"	1	5	208/1	27	30	54"x24"x21"	129	GOODMAN	ASPT24B14	1, 2
AHU-1.4	CORRIDOR	800	60	0.3	DIRECT	1/3	78.0/65.0	56.0/54.0	24,000	THROWAWAY	25%-30%	1"	1	5	208/1	27	30	54"x24"x21"	129	GOODMAN	ASPT24B14	1, 2
AHU-2.1	LOBBY, CORRIDOR	1,000	90	0.3	DIRECT	1/3	77.6/64.7	56.0/54.0	30,000	THROWAWAY	25%-30%	1"	1	5	208/1	27	30	45"x17.5"x21"	129	GOODMAN	ASPT30D14	1, 2
AHU-2.2	CORRIDOR	800	60	0.3	DIRECT	1/3	78.0/65.0	56.0/54.0	24,000	THROWAWAY	25%-30%	1"	1	5	208/1	27	30	54"x24"x21"	129	GOODMAN	ASPT24B14	1, 2
AHU-2.3	CORRIDOR	800	60	0.3	DIRECT	1/3	78.0/65.0	56.0/54.0	24,000	THROWAWAY	25%-30%	1"	1	5	208/1	27	30	54"x24"x21"	129	GOODMAN	ASPT24B14	1, 2
AHU-2.4	CORRIDOR	800	60	0.3	DIRECT	1/3	78.0/65.0	56.0/54.0	24,000	THROWAWAY	25%-30%	1"	1	5	208/1	27	30	54"x24"x21"	129	GOODMAN	ASPT24B14	1, 2

NOTES:
1. PROVIDE COMPLETE WITH DISCONNECT SWITCH AND 7-DAY PROGRAMMABLE THERMOSTAT WITH NIGHT SET BACK.
2. ROUTE AND SIZE REFRIGERANT LINES PER MANUFACTURES REQUIREMENTS.

DX SPLIT CONDENSING UNIT SCHEDULE (STRAIGHT COOL)

MARK	LOCATION	COMPRESSOR			CONDENSER FANS		ELECTRICAL							UNIT INFORMATION		MANUFACTURER	MODEL NUMBER	NOTES
		OUTDOOR DESIGN TEMP. (F°)	QTY.	CAPACITY STEPS %	QTY.	NOMINAL HP	VOLTAGE/ PHASE	COMPRESSOR RLA EACH	CONDENSER FANS QTY.	CONDENSER FANS FLA (EA.)	MCA	MOCP	SEER	UNIT SIZE (H"xW"xD")	OPERATING WEIGHT (LBS.)			
CU-1.1	ROOF	95°	1	100	1	1/6	208/1	12.8	1	1.1	17.1	25	14	32"x29"x29"	162	GOODMAN	GSX140301AA	1
CU-1.2	ROOF	95°	1	100	1	1/12	208/1	10.9	1	0.6	14.2	25	14	27"x26"x26"	131	GOODMAN	GSX140241AA	1
CU-1.3	ROOF	95°	1	100	1	1/12	208/1	10.9	1	0.6	14.2	25	14	27"x26"x26"	131	GOODMAN	GSX140241AA	1
CU-1.4	ROOF	95°	1	100	1	1/12	208/1	10.9	1	0.6	14.2	25	14	27"x26"x26"	131	GOODMAN	GSX140241AA	1
CU-2.1	ROOF	95°	1	100	1	1/6	208/1	12.8	1	1.1	17.1	25	14	32"x29"x29"	162	GOODMAN	GSX140301AA	1
CU-2.2	ROOF	95°	1	100	1	1/12	208/1	10.9	1	0.6	14.2	25	14	27"x26"x26"	131	GOODMAN	GSX140241AA	1
CU-2.3	ROOF	95°	1	100	1	1/12	208/1	10.9	1	0.6	14.2	25	14	27"x26"x26"	131	GOODMAN	GSX140241AA	1
CU-2.4	ROOF	95°	1	100	1	1/12	208/1	10.9	1	0.6	14.2	25	14	27"x26"x26"	131	GOODMAN	GSX140241AA	1

NOTES:
1. PROVIDE COMPLETE WITH DISCONNECT SWITCH, TIME DELAY RELAY AND ANTI-SHORT CYCLE TIMER.

AIR DEVICE SCHEDULE (UNITS)

MARK	DESCRIPTION	FACE SIZE	NECK	MATERIAL	MANUFACTURER & MODEL NO.	NOTES
A	LOUVERED FACE SUPPLY DIFFUSER – CEILING	6"x4"	SEE PLAN	ALUMINUM	METALAIRE LM-1 OR EQUAL	1.
B	LOUVERED FACE SUPPLY DIFFUSER – CEILING	10"x8"	SEE PLAN	ALUMINUM	METALAIRE LM-1 OR EQUAL	1.
C	LOUVERED FACE SUPPLY DIFFUSER – CEILING	10"x10"	SEE PLAN	ALUMINUM	METALAIRE LT-1 OR EQUAL	1.
D	RETURN AIR TRANSFER GRILLE	14"x8"	SEE PLAN	ALUMINUM	TAMARACK TECHNOLOGIES RAP 14.8 OR EQUAL	1.
E	LOUVERED FACE RETURN/TRANSFER GRILLE – SIDEWALL	14"x8"	SEE PLAN	ALUMINUM	METALAIRE RH-1 OR EQUAL	1.
F	LOUVERED FACE RETURN GRILLE – SIDEWALL	18"x18"	SEE PLAN	ALUMINUM	METALAIRE RH-1 OR EQUAL	1.

NOTES:
1. COORIDINATE SURFACE FINISHES WITH ARCHITECTURAL DRAWINGS.

FAN SCHEDULE

MARK	AREA SERVED	TYPE	CFM	T.S.P.	WATTS	R.P.M.	VOLTS/PH	SONES	MANUFACTURER & MODEL NO.	NOTES
EF-1	RESTROOM	WALL MOUNT	70	0.1	13.1	1,250	120/1ø	2.0	DELTA SLM70 OR EQUAL	1. 2. & 3.
EF-2	GARAGES	CEILING MOUNT	210	0.25	56.2	961	120/1ø	1.5	GREENHECK CSP-A250	2. 3. 4. & 5.

NOTES:
1. EXHAUST FAN TO BE CONTROLLED BY INDIVIDUAL SWITCH WITHIN RESTROOM.
2. PROVIDE WITH VIBRATION ISOLATOR KIT, INTEGRAL BACKDRAFT DAMPER, & PLASTIC WALL CAP.
3. PROVIDE 5 SIDED FIRE RATED BOX OR FIRE RATED PUTTY PACK WHEN WALL MOUNTED FAN IS INSTALLED IN 1 HR RATED WALL PER ARCHITECTURAL ADD/ALTERNATE WALL SYSTEM.
4. PROVIDE WITH CARBON MONOXIDE DETECTOR MOUNTED ON GARAGE WALL FOR CONTROL OF FAN.
5. GARAGE FAN EXHAUST IS BASED OFF OF FLORIDA MECHANICAL CODE TABLE 403.3; .75 CFM PER SQUARE FOOT.

MINI-SPLIT AIR HANDLING UNIT SCHEDULE

MARK	LOCATION SERVED	FAN					COOLING COIL						FILTERS			ELECTRIC HEATING COIL			SINGLE POINT UNIT ELEC. REQUIREMENTS			UNIT INFORMATION				
		TOTAL AIR FLOW (CFM)	OUTSIDE AIR FLOW (CFM)	EXTERNAL STATIC PRESS. (IN.WG.)	DRIVE TYPE	FLA	ENTERING AIR TEMP. (F° DB/WB)	LEAVING AIR TEMP. (F° DB/WB)	TOTAL CAPACITY (BTUH)	SENSIBLE CAPACITY (BTUH)	COIL AREA (SQ.FT.)	COIL ROW/FINS	TYPE	EFFICIENCY	THICKNESS	TOTAL CAPACITY (BTUH)	VOLTS/ PHASE	HEATER AMPS	VOLTAGE/ PHASE	SINGLE CIRCUIT MCA	SINGLE CIRCUIT MOCP	UNIT SIZE (H"xW"xD")	OPERATING WEIGHT (LBS.)	MANUFACTURER	MODEL NUMBER	NOTES
MAU-1	FACP, COMM RM'S	440	NA	NA	NA	0.51	80/67	56.0/54.0	17,200	NA	NA	NA	INTERNAL	25%-30%	NA	NA	NA	NA	208/1	1	15	12"x32"x9"	22	MITSUBISHI	MSY-GE18NA	1, 2, & 3

NOTES:
1. POWER FOR INDOOR UNIT PROVIDED FROM EXTERIOR CONDENSER. COORDINATE WITH ELECTRICAL CONTRACTOR TO PROVIDE POWER WIRING BETWEEN EACH UNIT IN FIELD.
2. ROUTE AND SIZE REFRIGERANT LINES PER MANUFACTURES REQUIREMENTS.
3. MOUNT AS HIGH ON WALL AS POSSIBLE.

MINI- SPLIT CONDENSING UNIT SCHEDULE

MARK	LOCATION	COMPRESSOR			CONDENSER FANS		ELECTRICAL							UNIT INFORMATION		MANUFACTURER	MODEL NUMBER	NOTES
		OUTDOOR DESIGN TEMP. (F°)	QTY.	CAPACITY STEPS %	QTY.	NOMINAL HP	VOLTAGE/ PHASE	COMPRESSOR RLA/LRA	CONDENSER FANS QTY.	CONDENSER FANS F.L.A.	MCA	MOCP	SEER	UNIT SIZE (H"xW"xD")	OPERATING WEIGHT (LBS.)			
MCU-1	EXTERIOR	95	1	100	1	–	208/1	NA	1	0.93	14	20	15	33"x34"x12"	119	MITSUBISHI	MUY-GE18NA	1.

NOTES:
1. PROVIDE COMPLETE WITH TIME DELAY RELAY AND ANTI-SHORT CYCLE TIMER.
2. DISCONNECT SWITCH PROVIDED BY DIVISION 16.

PERMIT REVIEW STAMP

ISSUE HISTORY

No.	Date	Description
1	10/06/2017	COORDINATION SET
2	11/10/2017	75%-90% REVIEW COORD. SET

REVISION HISTORY

No.	Date	Description

© 2015 These documents and their contents are the property of FUGLEBERG KOCH, P.L.C. (+A0000120) and are issued only for the specific project named on these drawings. Any reproductions, revisions, or modifications of these documents without the expressed written consent of Fugleberg Koch, P.L.C. is prohibited by law.

FUGLEBERG KOCH
2555 Temple Trail, Winter Park, FL 32789 (407) 629-0595
www.fuglebergkoch.com BR569

CONSULTANT
Joseph, Lawrence & Co
Consulting Engineers
1180 HARWOOD AVE. SUITE 3000
ALTAMONTE SPRINGS, FLORIDA 32714
TEL: 321.972.4466
WWW.JLCENG.COM
CA NO. 28730

JLC 17.0137.00

Adam Joseph Barney
P.E. #:69124

SUMMER BAY APTS. II
LAKE COUNTY, FL

Drawn:	MJR/KCM
Checked:	BLS/AJB
Approval:	BLS/AJB
Date:	11/10/2017
Project #:	5389

SCHEDULES - MECHANICAL

M5.01

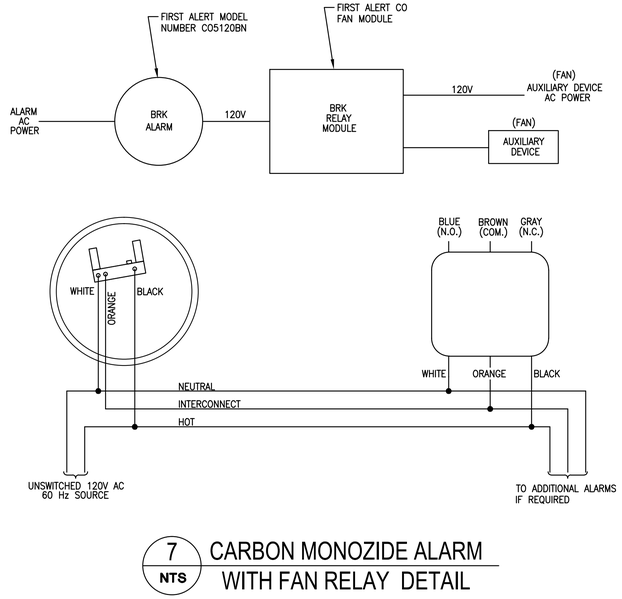

7 NTS CARBON MONOZIDE ALARM WITH FAN RELAY DETAIL

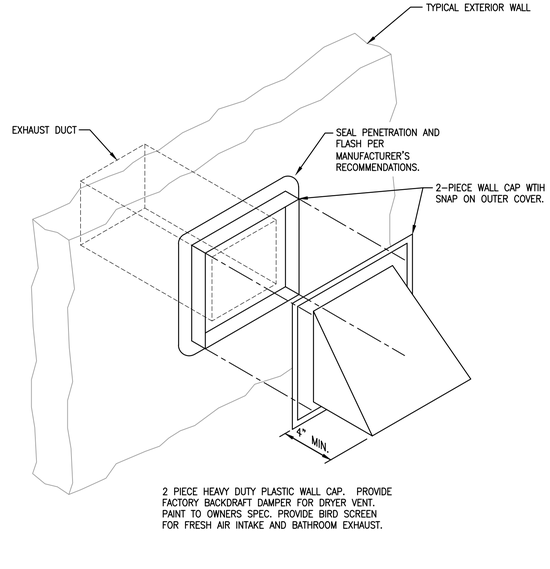

2 PIECE HEAVY DUTY PLASTIC WALL CAP. PROVIDE FACTORY BACKDRAFT DAMPER FOR DRYER VENT. PAINT TO OWNERS SPEC. PROVIDE BIRD SCREEN FOR FRESH AIR INTAKE AND BATHROOM EXHAUST.

6 NTS TYPICAL WALL JACK DETAIL (GARAGES)

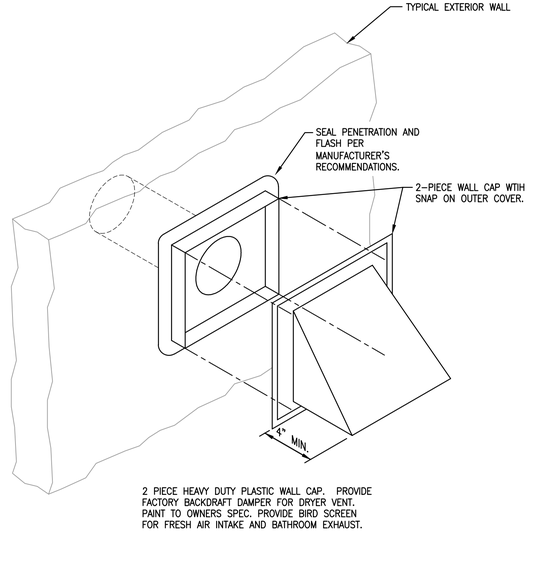

2 PIECE HEAVY DUTY PLASTIC WALL CAP. PROVIDE FACTORY BACKDRAFT DAMPER FOR DRYER VENT. PAINT TO OWNERS SPEC. PROVIDE BIRD SCREEN FOR FRESH AIR INTAKE AND BATHROOM EXHAUST.

5 NTS TYPICAL WALL JACK DETAIL (UNITS)

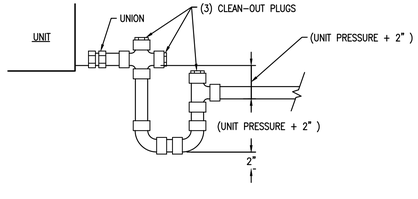

NOTES :

1. CONDENSATE DRAIN SHALL BE PIPED FULL SIZE OF UNIT CONNECTION.
2. CONDENSATE PANS SHALL BE INSTALLED WITH ADEQUATE PITCH TO ENSURE POSITIVE DRAINAGE OF ACCUMILATED CONDENSATE.
3. TRAP CONDENSATE AND DISCHARGE PER PLAN.

4 NTS CONDENSATE DRAIN DETAIL

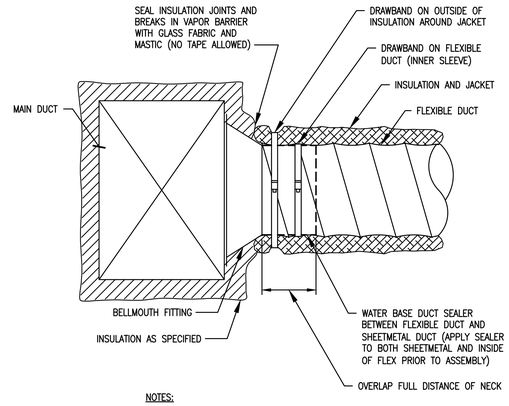

NOTES:

1. TYPICAL FOR: LOW PRESSURE AND HIGH PRESSURE CONNECTION TO MAIN DUCT, FAN TERMINAL UNITS, VARIABLE AIR VOLUME UNITS, AND DIFFUSERS.
2. DRAWBANDS SHALL BE EQUIVALENT TO PANDUIT PLT-H.

3 NTS FLEXIBLE DUCT CONNECTION DETAIL

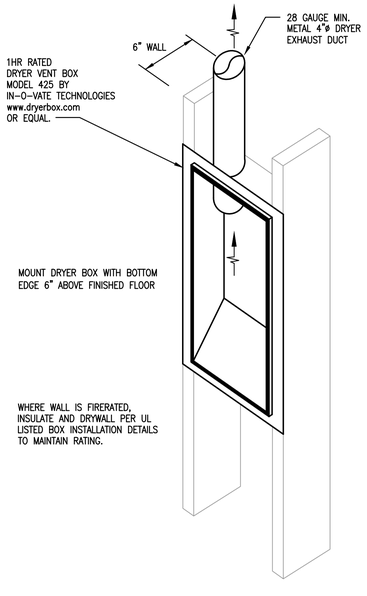

2 NTS DRYER VENT BOX DETAIL

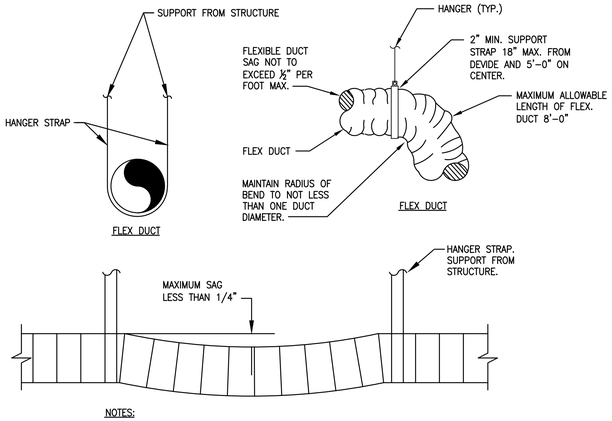

NOTES:

1. MAXIMUM SPACING BETWEEN HANGER LOCATIONS SHALL BE 5'-0".
2. STRAPS SHALL BE MINIMUM 1 1/2".
3. REFER TO SMACNA AND FLORIDA MECHANICAL CODE FOR ADDITIONAL REQUIREMENTS.
4. DUCTWORK SHALL BE SEALED IN MASTIC.

1 NTS FLEX DUCT HANGER DETAIL

PERMIT REVIEW STAMP

ISSUE HISTORY

No.	Date	Description
1	10/06/2017	COORDINATION SET
2	11/10/2017	75%-90% REVIEW COORD. SET

REVISION HISTORY

No.	Date	Description

© 2015 These drawings and their contents are the property of FUGLEBERG KOCH, P.L.C. +42000103 and are issued only for the specific project noted on these drawings. Any reproductions, revisions, or modifications of these documents without the expressed written consent of Fugleberg Koch, P.L.C. is prohibited by law.

FUGLEBERG KOCH
2555 Temple Trail, Winter Park, FL 32789 (407) 629-0595
www.fuglebergkoch.com BR569

CONSULTANT

Joseph, Lawrence & Co Consulting Engineers
1180 HARWOOD AVE. SUITE 3000
ALTAMONTE SPRINGS, FLORIDA 32714
TEL: 321.972.4466
WWW.JLCENG.COM
CA NO. 28730

JLC 17.0137.00

Adam Joseph Barney
P.E. #:69124

SUMMER BAY APTS. II
LAKE COUNTY, FL

Drawn:	MJR/KCM
Checked:	BLS/AJB
Approval:	BLS/AJB
Date:	11/10/2017
Project #:	5389

DETAILES - MECHANICAL

M6.01

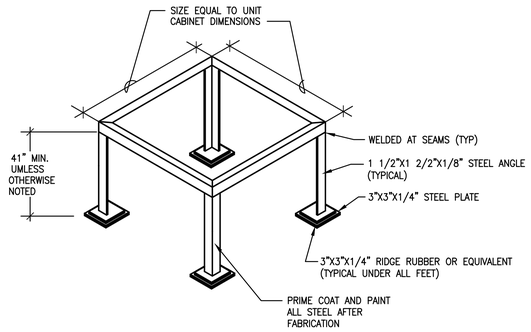

7 NTS STEEL ANGLE UNIT STAND DETAIL

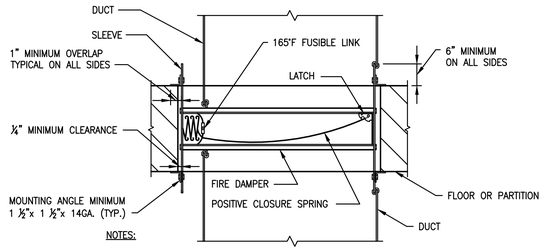

NOTES:

1. DAMPERS SHALL BE CONSTRUCTED, TESTED AND LABELLED IN ACCORDANCE WITH UNDERWRITERS LABORATORIES SAFETY STANDARD 555 FOR DYNAMIC SYSTEMS AND SHALL BE PROVIDED WITH CLOSURE SPRINGS.
2. INSTALLATION SHALL BE IN STRICT ACCORDANCE WITH THE MAUFACTURER'S INSTRUCTIONS.
3. SECURE MOUNTING ANGLES TO SLEEVE AT A MAXIMUM 6" ON CENTER.
4. CLEARANCE BETWEEN FIRE DAMPER SLEEVE AND OPENING SHALL BE ¼" PER FOOT OF HEIGHT (OR WIDTH) UNLESS OTHERWISE STATED IN THE LISTING OF THE ASSEMBLY.
5. PROVIDE ACCESS PANEL IN DUCT AT A POINT ADJACENT TO FUSIBLE LINKAGE.

6 NTS FIRE DAMPER DETAIL

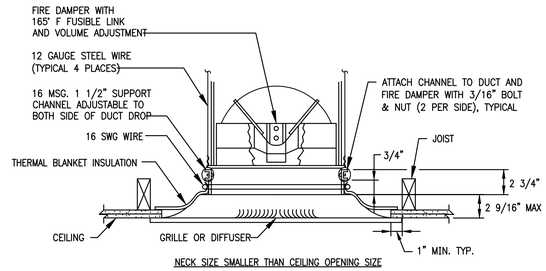

NECK SIZE SMALLER THAN CEILING OPENING SIZE

NOTES:

1. DAMPER SHALL BE U.L. CLASSIFIED UNDER U.L. STANDARD 555.
2. THERMAL BLANKET INSULATION SHALL BE U.L. CLASSIFIED UNDER U.L. STANDARD 555.
3. APPLIES TO DIFFUSERS RETURN GRILLES & TRANSFER GRILLES PENETRATING RATED CEILING.

5 NTS RADIATION DAMPER DETAIL

RUSKIN MODEL NUMBER CFD7T OR EQUAL

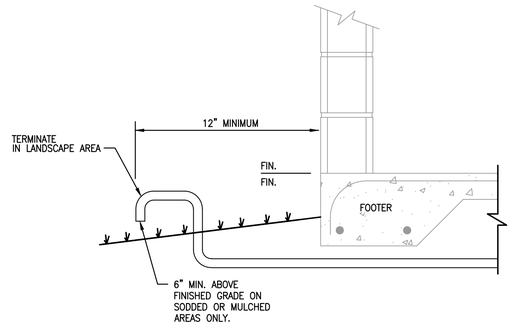

4 NTS CONDENSATE DRAIN TERMINATION DETAIL

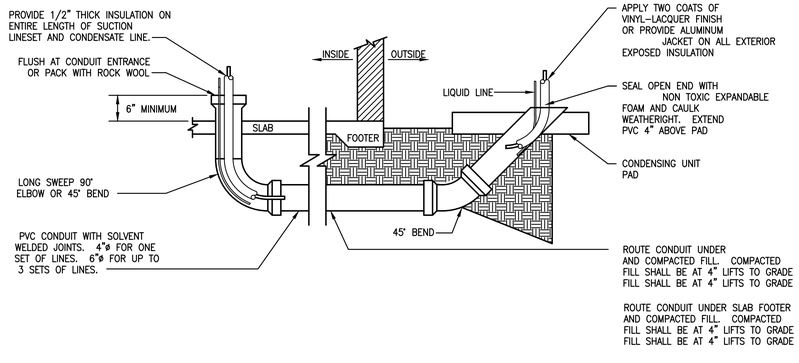

3 NTS REFRIGERANT SLEEVE DETAIL

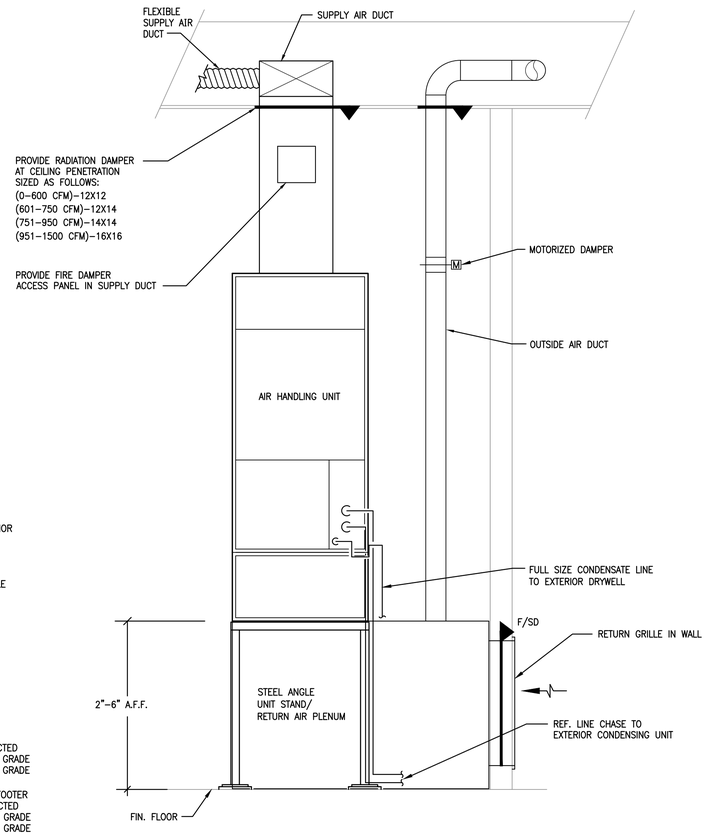

2 NTS VERTICAL AHU DETAIL (CORRIDORS)

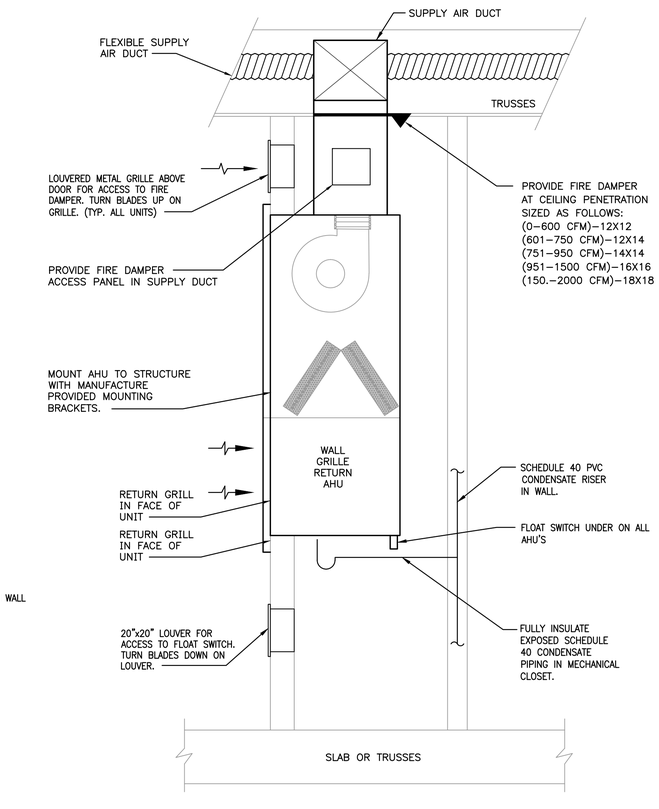

1 NTS WALL MOUNTED AHU DETAIL (UNITS)

PERMIT REVIEW STAMP

ISSUE HISTORY

No.	Date	Description
1	10/06/2017	COORDINATION SET
2	11/10/2017	75%-90% REVIEW COORD. SET

REVISION HISTORY

No.	Date	Description

© 2015 These documents are the property of FUGLEBERG KOCH, P.L.C. #AD00012203, and are issued only for the specific project noted on these drawings. Any reproductions, revisions, or modifications of these documents without the expressed written consent of Fugleberg Koch, P.L.C. is prohibited by law.

FUGLEBERG KOCH
2555 Temple Trail, Winter Park, FL 32789 (407) 629-0595
www.fuglebergkoch.com BR569
CONSULTANT

Joseph, Lawrence & Co Consulting Engineers
1180 HARWOOD AVE SUITE 3000
ALTAMONTE SPRINGS, FLORIDA 32714
TEL: 321.972.4466
WWW.JLCENG.COM
CA NO. 28730

JLC 17.0137.00

Adam Joseph Barney
P.E. #:69124

SUMMER BAY APTS. II
LAKE COUNTY, FL

Drawn:	MJR/KCM
Checked:	BLS/AJB
Approval:	BLS/AJB
Date:	11/10/2017
Project #:	5389

DETAILES - MECHANICAL

M6.02

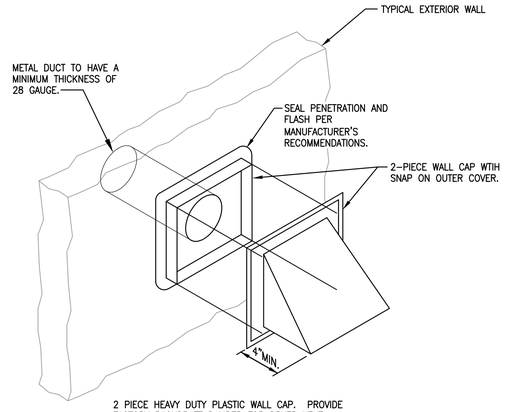

2 PIECE HEAVY DUTY PLASTIC WALL CAP. PROVIDE FACTORY BACKDRAFT DAMPER FOR DRYER VENT. PAINT TO OWNERS SPEC. PROVIDE BIRD SCREEN FOR FRESH AIR INTAKE AND BATHROOM EXHAUST.

6 NTS TYPICAL WALL JACK DETAIL

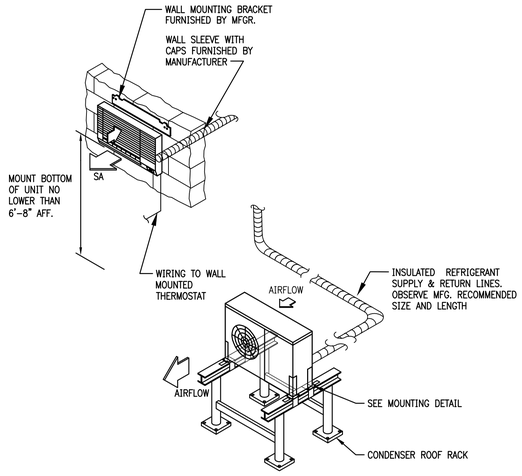

5 NTS WALL MOUNTED SPLIT SYSTEM SUPPORT DETAIL

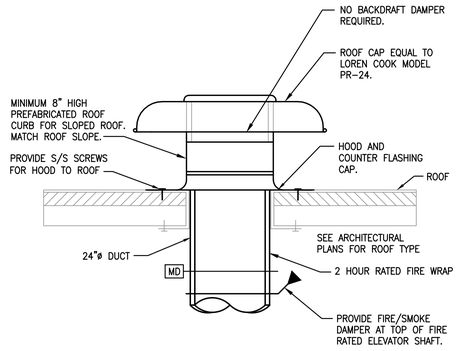

4 NTS ELEVATOR RELIEF VENTING DETAIL

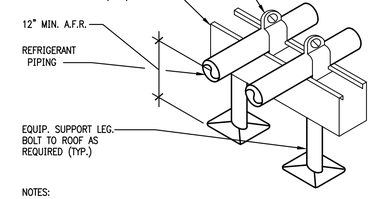

NOTES:

1. SUPPORTS SHALL BE INSTALLED A MAXIMUM 8'–0" O.C. AND AT EACH CHANGE OF DIRECTION OF PIPING.

3 NTS ROOF PIPING SUPPORT DETAIL

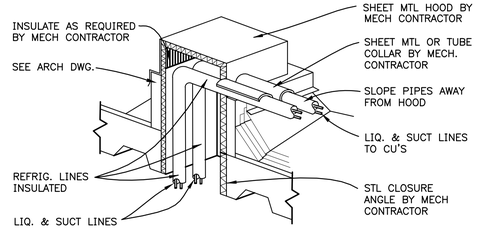

2 NTS REFRIGERANT PIPING THRU ROOF DETAIL

ANCHOR SCHEDULE		
ANCHOR TYPE	HOST STRUCTURE	ANCHOR DESCRIPTION
1	STEEL	⅜"ø SAE GRADE 5 SHEET METAL SCREWS WITH 1"ø MIN. WASHER, TO STRUCTURAL A36 STEEL MEMBERS (3/16" MIN HOST THICKNESS)
2	CONCRETE	⅜"ø CARBON STEEL WEDGE–BOLT CONCRETE ANCHOR WITH 1"ø MIN. WASHER, 2½" EMBEDMENT & 6" MIN EDGE DISTANCE, 4 ANCHORS PER BASE PLATE, ONE IN EACH CORNER
3	WOOD	⅜"ø SAE GRADE 5 THREADED RODS WITH ¾" MIN. WASHER AND LOCKING NUTS. 4 ANCHORS PER BASE PLATE, ONE IN EACH CORNER
4	STEEL	⅜"ø SAE GRADE 5 THRUBOLT WITH 1"ø MIN. WASHER & NUT, TO STRUCTURAL A36 STEEL MEMBERS (3/16" MIN HOST THICKNESS)

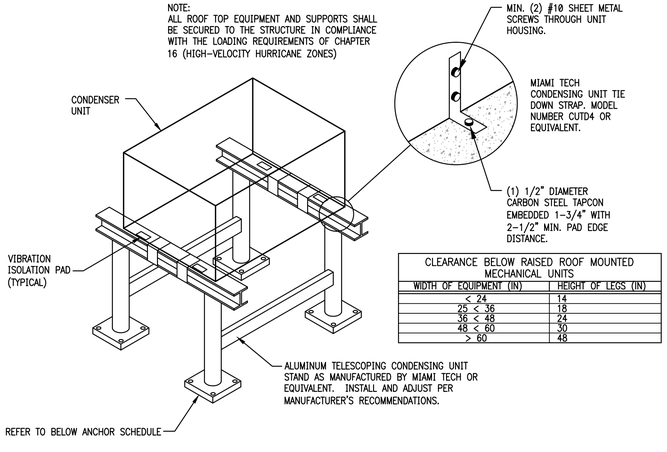

CLEARANCE BELOW RAISED ROOF MOUNTED MECHANICAL UNITS	
WIDTH OF EQUIPMENT (IN)	HEIGHT OF LEGS (IN)
< 24	14
25 < 36	18
36 < 48	24
48 < 60	30
> 60	48

1 NTS CONDENSER RACK DETAIL

PERMIT REVIEW STAMP

ISSUE HISTORY

No.	Date	Description
1	10/06/2017	COORDINATION SET
2	11/10/2017	75%-90% REVIEW COORD. SET

REVISION HISTORY

No.	Date	Description

These documents and their contents are the property of FUGLEBERG KOCH, P.L.C. (c) 2014. Their contents shall not be used for any specific project owned or these drawings, in any reproductions, revisions, or modifications of these documents without the expressed written consent of Fugleberg Koch, P.L.C. is prohibited by law.

FUGLEBERG KOCH
2555 Temple Trail, Winter Park, FL 32789 (407) 629-0595
www.fuglebergkoch.com BR569

CONSULTANT
Joseph, Lawrence & Co Consulting Engineers
1180 HARWOOD AVE. SUITE 3000
ALTAMONTE SPRINGS, FLORIDA 32714
TEL. 321.972.4466
WWW.JLCENG.COM
CA NO. 28730

JLC 17.0137.00

Adam Joseph Barney
P.E. #:69124

SUMMER BAY APTS. II
LAKE COUNTY, FL

Drawn:	MJR/KCM
Checked:	BLS/AJB
Approval:	BLS/AJB
Date:	11/10/2017
Project #:	5389

DETAILES - MECHANICAL

M6.03

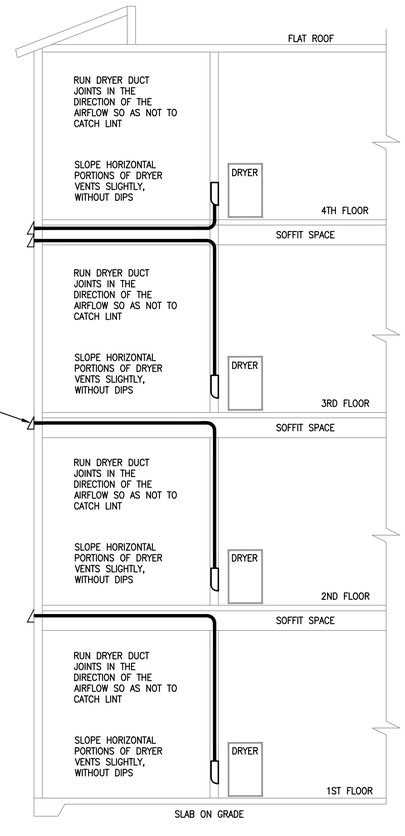

3 NTS DRYER EXHAUST VENT DIAGRAM

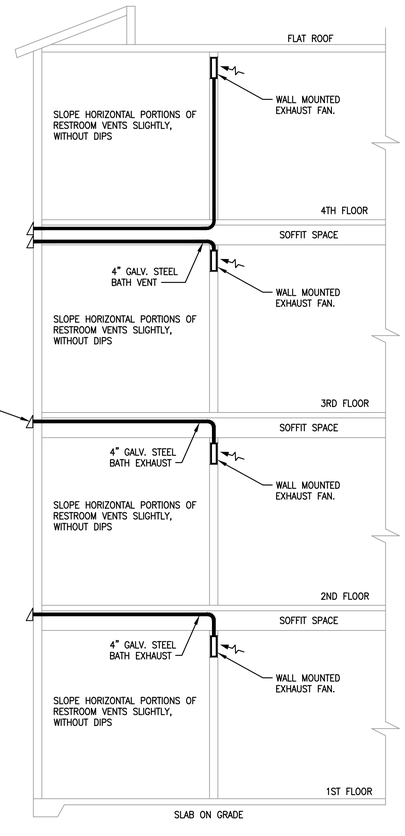

2 NTS BATH EXHAUST VENT DIAGRAM

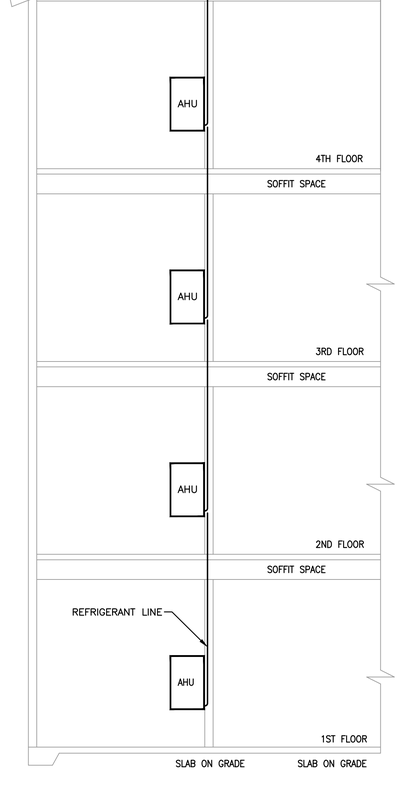

1 NTS REFRIGERANT LINE ROUTING DIAGRAM

PERMIT REVIEW STAMP

ISSUE HISTORY

No.	Date	Description
1	10/06/2017	COORDINATION SET
2	11/10/2017	75%-90% REVIEW COORD. SET

REVISION HISTORY

No.	Date	Description

© 2015 These documents and their contents are the property of FUGLEBERG KOCH, P.L.C. +42000103 and are issued only for the specific project noted on these drawings. Any reproductions, revisions, or modifications of these documents without the expressed written consent of Fugleberg Koch, P.L.C. is prohibited by law.

FUGLEBERG KOCH
2555 Temple Trail, Winter Park, FL 32789 (407) 629-0595
www.fuglebergkoch.com BR569
CONSULTANT

Joseph, Lawrence & Co
Consulting Engineers
1180 HAYWOOD AVE. SUITE 3000
ALTAMONTE SPRINGS, FLORIDA 32714
TEL: 321.972.4466
WWW.JLCENG.COM
CA NO. 28730

JLC 17.0137.00

Adam Joseph Barney
P.E. #:69124

SUMMER BAY APTS. II
LAKE COUNTY, FL

Drawn:	MJR/KCM
Checked:	BLS/AJB
Approval:	BLS/AJB
Date:	11/10/2017
Project #:	5389

RISER DIAGRAMS - MECHANICAL

M7.01

MECHANICAL SPECIFICATIONS

GENERAL

THE GENERAL MECHANICAL SPECIFICATIONS APPLY TO THE WORK SPECIFIED IN THIS SECTION.

SCOPE OF WORK

FURNISH AND INSTALL COMPLETE AIR CONDITIONING SYSTEMS AS INDICATED ON THE DESIGN DRAWINGS AND AS OUTLINED WITHIN THESE SPECIFICATIONS. WORK SHALL INCLUDE BUT NOT BE LIMITED TO THE FABRICATION AND/OR INSTALLATION OF THE SCHEDULED AIR CONDITIONING UNITS, EXHAUST FANS, AIR DISTRIBUTION AND DUCTWORK.

CLEANING, TESTING AND ADJUSTING:
THE MECHANICAL CONTRACTOR, AT HIS EXPENSE, SHALL CLEAN, REPAIR, ADJUST, CHECK, BALANCE, AND PLACE IN SERVICE THE VARIOUS SYSTEMS HEREIN SPECIFIED WITH THEIR RESPECTIVE EQUIPMENT, ACCESSORIES AND PIPING. HE SHALL FURNISH ALL LABOR, MATERIALS, EQUIPMENT, AND TOOLS REQUIRED TO PERFORM TESTS REQUIRED BY THESE SPECIFICATIONS AND BY THE GOVERNING AUTHORITIES.

NO WORK SHALL BE COVERED OR CONCEALED UNTIL PROPERLY INSPECTED AND TESTED.

TESTING:
ADJUST THE AIR CONDITIONING SYSTEMS, VENTILATING SYSTEMS, FANS, ETC., TO DELIVER NOT LESS THAN THE REQUIRED AIR QUANTITY WITH QUANTITIES IN EXCESS TO BE SUBJECT TO THE APPROVAL OF THE ENGINEER IF FOUND TO NOT HAVE OBJECTIONABLE EFFECTS SUCH AS NOISE, DRAFTS, OR MOTOR OVERLOAD.

THIS CONTRACTOR SHALL PROVIDE THREE (3) COPIES OF A TEST AND BALANCE REPORT TO THE OWNER AT TIME OF SUBSTANTIAL COMPLETION INSPECTION.

THE TEST AND BALANCE REPORT SHALL BE TYPEWRITTEN AND CONTAIN THE FOLLOWING DATA:

1. DATE, TIME, WEATHER, WHEN TEST TAKEN.
2. AIR CAPACITIES AT EACH UNIT INCLUDING OUTSIDE AIR. (ENTERING AND LEAVING DB/WB)
3. STATIC PRESSURE THROUGH UNITS AND UNIT COMPONENTS.
4. MOTOR OPERATING VOLTAGE AND AMPERAGE.
5. DRIVE TYPES, SIZES AND SPEED RANGE.
6. IDENTIFICATION OF ALL AIR TERMINAL DEVICES WITH DESIGN CFM AND ACTUAL CFM.

ADDITIONALLY, SYSTEMS DRAWING CLEARLY MARKED TO IDENTIFY LOCATION OF EQUIPMENT AND AIR DEVICES TESTED SHALL BE PROVIDED ALONG WITH THE WRITTEN TEST AND BALANCE REPORT.

MAINTENANCE MANUALS

PROVIDE COMPLETE MAINTENANCE MANUALS (3 REQUIRED) ON ALL NEW EQUIPMENT. ORGANIZE OPERATING AND MAINTENANCE DATA INTO SUITABLE SETS OF MANAGEABLE SIZE. BIND PROPERLY INDEXED DATA INTO INDIVIDUAL, HEAVY-DUTY, 2-INCH, 3-RING VINYL COVERED BINDERS WITH POCKET FOLDERS FOR FOLDED SHEET INFORMATION. MARK APPROPRIATE IDENTIFICATION ON FRONT AND SPINE OF EACH BINDER. INCLUDE THE FOLLOWING TYPES OF INFORMATION. THE INFORMATION WILL BE TURNED OVER TO THE OWNER AT TIME OF SUBSTANTIAL COMPLETION:

- OPERATING AND MAINTENANCE INSTRUCTIONS
- SPARE PARTS LIST
- COPIES OF WARRANTIES
- WIRING DIAGRAMS
- INSPECTION REPORTS AND APPROVALS
- SHOP DRAWINGS AND PRODUCT DATA

TRAINING SERVICES

THOROUGHLY INSTRUCT THE OWNER'S REPRESENTATIVE IN THE OPERATION OF ALL EQUIPMENT FURNISHED AND LOCATION OF ALL VALVES AND CONTROL DEVICES.

TRAIN BUILDING OWNER'S PERSONNEL DURING NORMAL WORKING HOURS ON STARTUP AND SHUTDOWN PROCEDURES, TROUBLESHOOTING PROCEDURES, SERVICING AND PREVENTATIVE MAINTENANCE SCHEDULE AND PROCEDURES. REVIEW WITH THE OWNER'S PERSONNEL, THE DATA CONTAINED IN THE OPERATING AND MAINTENANCE MANUALS. SCHEDULE TRAINING WITH OWNER, PROVIDE AT LEAST 7-DAYS PRIOR NOTICE TO ARCHITECT/ENGINEER.

HANGERS AND SUPPORTS

PROVIDE ALL NECESSARY HANGER RODS, CLAMPS AND ATTACHMENTS TO PROPERLY INSTALL AND SUPPORT DUCTWORK, PIPING AND EQUIPMENT FROM THE BUILDING STRUCTURE.

PROVIDE ANY ANGLE IRON OR UNISTRUT AND SUSPENSION RODS REQUIRED TO INSTALL EQUIPMENT, PIPING AND DUCTWORK.

ALL SUPPORTS EXPOSED TO OUTDOORS SHALL BE CLEANED, PRIMED AND PAINTED TO PREVENT RUSTING. FINISH COLOR AS SELECTED BY OWNER.

THE USE OF BALING WIRE OR PERFORATED METAL STRAPPING IS NOT ACCEPTABLE FOR SUPPORTS.

WARRANTY/GUARANTEE:

THE CONTRACTOR SHALL WARRANTY/GUARANTEE AND MAINTAIN THE STABILITY OF WORK AND MATERIALS AND KEEP SAME IN PERFECT REPAIR AND CONDITION OF THE PERIOD OF ONE (1) YEAR.

DEFECTS OF ANY KIND DUE TO FAULTY WORK OR MATERIALS APPEARING DURING THE ABOVE MENTIONED PERIOD MUST BE IMMEDIATELY MADE GOOD BY THE CONTRACTOR AT HIS OWN EXPENSE TO THE ENTIRE SATISFACTION OF THE OWNER AND ARCHITECT AND ENGINEER. SUCH RECONSTRUCTION AND REPAIRS SHALL INCLUDE ALL DAMAGE TO THE FINISH OR FURNISHING OF THE BUILDING RESULTING FROM THE ORIGINAL DEFECT OR REPAIRS THERETO.

EQUIPMENT:

1.1 QUALITY ASSURANCE

A. ELECTRICAL COMPONENTS, DEVICES, AND ACCESSORIES: LISTED AND LABELED AS DEFINED IN NFPA 70, ARTICLE 100, BY A TESTING AGENCY ACCEPTABLE TO AUTHORITIES HAVING JURISDICTION, AND MARKED FOR INTENDED USE.
B. UNITS SHALL BE DESIGNED TO OPERATE WITH HCFC-FREE REFRIGERANTS.

1.2 WARRANTY

A. SPECIAL WARRANTY: MANUFACTURER'S STANDARD FORM IN WHICH MANUFACTURER AGREES TO REPLACE COMPONENTS LISTED BELOW THAT FAIL IN MATERIALS OR WORKMANSHIP WITHIN SPECIFIED WARRANTY PERIOD.
   1. WARRANTY PERIOD FOR COMPRESSORS: MANUFACTURER'S STANDARD, BUT NOT LESS THAN FIVE (5) YEARS FROM DATE OF SUBSTANTIAL COMPLETION.
   2. WARRANTY PERIOD FOR HEAT EXCHANGERS: MANUFACTURER'S STANDARD, BUT NOT LESS THAN FIVE (5) YEARS FROM DATE OF SUBSTANTIAL COMPLETION.

1.3 MANUFACTURERS

A. MANUFACTURERS: SUBJECT TO COMPLIANCE WITH REQUIREMENTS, PROVIDE PRODUCTS BY ONE OF THE FOLLOWING:
   1. AAON
   2. TRANE
   3. CARRIER
   4. YORK

2.1 CABINET

A. CONSTRUCTION: SINGLE WALL.
B. EXTERIOR CASING: GALVANIZED STEEL WITH BAKED-ENAMEL PAINT FINISH WITH LIFTING LUGS AND KNOCKOUTS FOR ELECTRICAL AND PIPING CONNECTIONS.

2.2 INTERIOR CASING – GALVANIZED STEEL

A. BASE RAILS: GALVANIZED-STEEL RAILS FOR MOUNTING ON ROOF CURB.
B. SERVICE DOORS: HINGED ACCESS DOORS WITH NEOPRENE GASKETS.
C. INTERNAL INSULATION: FIBROUS-GLASS DUCT LINING COMPLYING WITH ASTM C 1071, TYPE II.
   1. THICKNESS: 1 INCH (25 MM).
   2. INSULATION ADHESIVE: COMPLY WITH ASTM C 916, TYPE I.
   3. MECHANICAL FASTENERS: GALVANIZED STEEL, SUITABLE FOR ADHESIVE ATTACHMENT, MECHANICAL ATTACHMENT, OR WELDING ATTACHMENT TO CASING WITHOUT DAMAGING LINER AND WITHOUT CAUSING AIR LEAKAGE WHEN APPLIED AS RECOMMENDED BY MANUFACTURER.
D. CONDENSATE DRAIN PANS: FORMED SECTIONS OF STAINLESS-STEEL SHEET DESIGNED FOR SELF-DRAINAGE. FABRICATE PANS WITH SLOPES TO PRECLUDE BUILDUP OF MICROBIAL SLIME. PROVIDE FLOAT SWITCH.
E. ROOF CURB: FULL-PERIMETER CURB OF SHEET METAL, MINIMUM 14 INCHES HIGH, WITH WOOD NAILER, NEOPRENE SEALING STRIP, AND WELDED Z-BAR FLASHING.

2.3 SUPPLY-AIR FAN

A. FAN: FORWARD-CURVED CENTRIFUGAL; STATICALLY AND DYNAMICALLY BALANCED, GALVANIZED STEEL, MOUNTED ON SOLID-STEEL SHAFT WITH SELF-ALIGNING, PERMANENTLY LUBRICATED BALL BEARINGS.
B. MOTOR: TOTALLY ENCLOSED-SPEED MOTOR.
C. DRIVE: V-BELT DRIVE WITH MATCHING FAN PULLEY AND ADJUSTABLE MOTOR SHEAVES AND BELT ASSEMBLY WITH MINIMUM 1.4 SERVICE FACTOR.
D. MOUNTING: FAN WHEEL, MOTOR, AND DRIVES SHALL BE MOUNTED IN FAN CASING WITH SPRING ISOLATORS.

2.4 REFRIGERATION SYSTEM

A. FABRICATE AND LABEL REFRIGERATION SYSTEM TO COMPLY WITH ASHRAE 15, "SAFETY CODE FOR MECHANICAL REFRIGERATION."
B. COMPRESSORS: RECIPROCATING OR SCROLL COMPRESSORS WITH INTEGRAL VIBRATION ISOLATORS, INTERNAL OVERCURRENT AND OVERTEMPERATURE PROTECTION, INTERNAL PRESSURE RELIEF.
C. EER AND COP: 13 EER AND 11.8 COP VALUES AS DEFINED BY ASHRAE/IESNA 90.1, "ENERGY EFFICIENT DESIGN OF NEW BUILDINGS EXCEPT LOW-RISE RESIDENTIAL BUILDINGS."
D. REFRIGERANT: R-410A ON ALL NEW SYSTEMS.
E. REFRIGERATION SYSTEM SPECIALTIES: EXPANSION VALVE WITH REPLACEABLE THERMOSTATIC ELEMENT
   1. REFRIGERANT DRYER.
   2. HIGH-PRESSURE SWITCH.
   3. LOW-PRESSURE SWITCH.
   4. THERMOSTAT FOR COIL FREEZE-UP PROTECTION DURING LOW AMBIENT TEMPERATURE OPERATION OR LOSS OF AIR.
   5. BRASS SERVICE VALVES INSTALLED IN DISCHARGE AND LIQUID LINES.
   6. OPERATING CHARGE OF REFRIGERANT.

2.5 CAPACITY CONTROL

A. HOT-GAS BYPASS REFRIGERANT CONTROL FOR CAPACITY CONTROL WITH CONTINUOUS DEHUMIDIFICATION ON A SINGLE COMPRESSOR.

2.6 REFRIGERANT COILS

A. EVAPORATOR AND CONDENSER COILS SHALL BE DESIGNED, TESTED, FABRICATED, AND RATED ACCORDING TO ARI 410 AND ASHRAE 33. COILS SHALL BE LEAK TESTED UNDER WATER WITH AIR AT 315 PSIG (2170 KPA).
   1. CAPACITY REDUCTION: CIRCUIT COILS FOR FACE CONTROL.
   2. TUBES: COPPER.
   3. FINS: ALUMINUM
   4. FIN AND TUBE JOINT: MECHANICAL BOND.
   5. SUCTION AND DISTRIBUTOR: SEAMLESS COPPER TUBE WITH BRAZED JOINTS.
   6. COATING: PHENOLIC EPOXY CORROSION-PROTECTION COATING ON BOTH COILS.
   7. SOURCE QUALITY CONTROL: TEST TO 450 PSIG (3105 KPA), AND TO 300 PSIG (2070 KPA) UNDERWATER.
B. CONDENSER FAN: PROPELLER TYPE, DIRECTLY DRIVEN BY MOTOR.
C. SAFETY CONTROLS:
   1. COMPRESSOR MOTOR AND OUTSIDE-COIL FAN MOTOR LOW AMBIENT LOCKOUT.
   2. OVERCURRENT PROTECTION FOR COMPRESSOR MOTOR AND OUTSIDE-COIL FAN MOTORS.

2.7 FILTERS

A. COMPLY WITH NFPA 90A.
B. DISPOSABLE PLEASTED FILTERS: 2-INCH- (50-MM-) THICK, FACTORY-FABRICATED, FLAT-PANEL-TYPE, DISPOSABLE AIR FILTERS WITH HOLDING FRAMES.
C. FILTER MEDIA TO BE INTERLACED GLASS FIBERS SPRAYED WITH NONFLAMMABLE ADHESIVE.
D. FILTER FRAMES TO BE GALVANIZED STEEL.

2.8 CONTROLS

A. FACTORY-WIRE CONNECTION FOR CONTROLS' POWER SUPPLY.
B. CONTROL DEVICES, INCLUDING SENSORS, TRANSMITTERS, RELAYS, SWITCHES, THERMOSTATS, HUMIDISTATS, DETECTORS, OPERATORS, ACTUATORS, AND VALVES, SHALL BE MANUFACTURER'S STANDARD ITEMS TO ACCOMPLISH INDICATED CONTROL FUNCTIONS.
C. UNIT CONTROLS: SOLID-STATE CONTROL BOARD AND COMPONENTS WITH FIELD-ADJUSTABLE CONTROL PARAMETERS.
D. SUPPLY-FAN CONTROL: UNITS SHALL BE ELECTRICALLY INTERLOCKED WITH CORRESPONDING EXHAUST FANS, TO OPERATE CONTINUOUSLY WHEN EXHAUST FANS ARE RUNNING. TIME CLOCK SHALL SWITCH OPERATION FROM OCCUPIED TO UNOCCUPIED. NIGHT SETBACK THERMOSTAT SHALL CYCLE FAN DURING UNOCCUPIED PERIODS TO MAINTAIN SPACE TEMPERATURE.
   1. TIMER: SEVEN-DAY ELECTRONIC CLOCK.
E. ELECTRICALLY INTERLOCK KITCHEN HOOD FIRE-EXTINGUISHING SYSTEM TO DE-ENERGIZE REPLACEMENT-AIR UNIT WHEN FIRE-EXTINGUISHING SYSTEM DISCHARGES.
F. MINIMUM REFRIGERATION SYSTEM CONTROLS SHALL CONSIST OF A WALL-MOUNTING, RELATIVE-HUMIDITY AND TEMPURATURE SENSOR THAT ENERGIZES DEHUMIDIFIER OPERATION WHEN RELATIVE HUMIDITY IS MORE THAN 60 PERCENT.

PIPING:

CONDENSATE DRAINS:

CONDENSATE PIPE TO BE TYPE L OR PVC. ROUTE TO DRYWELL OR AS INDICATED ON PLANS. COORDINATE WITH PLUMBER TO PROVIDE HUB DRAIN(S) IN MECHANICAL ROOM AND DRYWELL(S). HVAC CONTRACTOR TO PROVIDE P-TRAP AT UNIT SIZED FOR 2" GREATER THAN UNIT STATIC PRESSURE. PROVIDE CLEANOUT AT UNIT FOR SUSPENDED HORIZONTAL AIR HANDLERS. INSULATE CONDENSATE PIPE WITH 1/2" ARMAFLEX (OR EQUAL) INSULATION RATED FOR PLENUM APPLICATION. CONDENSATE DRAIN LINE SHALL BE NOT LESS THAN THE EQUIPMENT DRAIN LINE SIZE AND IN NO CASE LESS THAN 3/4" PIPE SIZE.

REFRIGERANT PIPING:

COVER ALL EXPOSED LIQUID LINES AND ALL SUCTION PIPING (INDOORS AND OUTDOORS), FITTINGS, VALVES, ETC., CONTINUOUS THROUGH SLEEVES, HANGERS, ETC., WITH 1/2" FR/ARMAFLEX. INSTALLATION SHALL BE CONDENSATION FREE AND INSTALLED ACCORDING TO MANUFACTURER'S RECOMMENDATIONS.

REFRIGERANT PIPING BELOW GRADE SHALL BE ROUTED THROUGH MINIMUM 4" DIAMETER PVC PIPE SLEEVES TO EACH CONDENSING UNIT. ALL UNDERGROUND REFRIGERANT PIPING SHALL BE CONTINUOUS WITH NO UNDERGROUND JOINTS ALLOWED. REFRIGERANT PIPE SIZES SHALL BE SIZED PER A/C EQUIPMENT MANUFACTURER'S RECOMMENDATION BASED ON LENGTH OF RUN BETWEEN CONDENSING UNITS AND AHU UNITS.

PIPING ROUTED ALONG BUILDING EXTERIOR WALL SHALL BE PROTECTED BY SHEET METAL HOUSING SECURELY ATTACHED TO WALL AT 8'-0" INTERVALS AND PAINTED TO MATCH BUILDING EXTERIOR.

TRAP OIL IN SUCTION LINE AT EVAPORATOR COIL. NO OTHER COIL TRAPS PERMITTED. PROVIDE SUCTION RISERS, CHECK VALVES, SOLENOID VALVES, OR OTHER DEVICES REQUIRED IN PIPING SYSTEM BY MANUFACTURER'S INSTALLATION INSTRUCTIONS.

PIPE HANGERS AND SUPPORTS:
PIPE HANGERS, WHERE NEEDED, SHALL BE GRINNEL #260 CLEVIS TYPE, 5'-0" ON CENTER, SECURELY ATTACHED TO BUILDING CONSTRUCTION. SPACE AT MIN. 5'-0" INTERVALS.

PIPE SUPPORT:
ATTACH LINES SECURELY ALONG PAD/FLOOR/EQUIPMENT/STRUCTURE TO PREVENT MOVEMENT. SUPPORT IN A MANNER THAT LINES DO NOT HANG FROM EVAPORATOR CONNECTIONS OR BLOCK ACCESS TO FILTERS, CONTROLS, ETC.

SUPPORT AT MIN. 8'-0" INTERVALS FOR VERTICAL PIPES, 5'-0" FOR SUSPENDED HORIZONTAL PIPING.

EXHAUST FANS:

FURNISH EXHAUST FANS WITH PERFORMANCE AND CAPACITIES AS LISTED ON THE DESIGN DRAWINGS.

SUSPENDED FANS SHALL BE SUPPORTED FROM A TRAPEZE TYPE HANGER WITH SPRING MOUNTED VIBRATION ISOLATORS.

ALL EXHAUST FANS SHALL COME WITH INTEGRAL BACKDRAFT DAMPER.

COORDINATE WITH ARCHITECT TO LOCATE EXHAUST FANS, EXHAUST GRILLES, WALL OR ROOF CAPS A MINIMUM DISTANCE OF 10'-0" FROM ANY OPERABLE WINDOW, DOOR OR FRESH AIR INTAKE.

AIR DISTRIBUTION EQUIPMENT:

FURNISH SUPPLY AIR GRILLES AND RETURN AIR REGISTERS WITH OPPOSED BLADE BALANCING DAMPERS AS SCHEDULED ON THE DESIGN DRAWINGS.

GRILLES, REGISTERS, AND CEILING DIFFUSERS SHALL BE FURNISHED AS SCHEDULED ON THE DESIGN DRAWINGS AND SHALL BE ALL ALUMINUM CONSTRUCTION UNLESS NOTED OTHERWISE. AIR DISTRIBUTION SHALL NOT EXCEED NC-30 NOISE CRITERIA AS DEFINED IN THE LATEST ASHRAE GUIDE.

DUCTWORK:

1. ALL DUCTWORK DIMENSIONS ARE INSIDE NET FREE AREA.
2. SEAL ALL JOINTS WITH GLASS-FAB AND MASTIC.
3. ALL DUCTWORK SHOWN PER PLAN IS TO BE SHEET METAL. FIBERGLASS DUCT BOARD IS NOT TO BE INSTALLED UNLESS SPECIFICALLY AUTHORIZED BY THE BUILDING LANDLORD, PROJECT OWNER/AGENT AND MECHANICAL ENGINEER OF RECORD.
4. ALL EXHAUST AND OUTSIDE AIR DUCTWORK IS TO BE SHEET METAL – NO EXCEPTIONS. ADJUSTABLE SPLITTERS AND DAMPERS SHALL BE SUPPLIED AND INSTALLED IN EVERY SPLIT AND BRANCH DUCT AND SHALL BE PROVIDED WITH LOCKING QUADRANTS ON EXPOSED OR IN ACCESSIBLE AREAS OF THE DUCT FOR EASE OF OPERATION. ACCESS PANELS OR YOUNG REGULATORS SHALL BE PROVIDED WHERE DAMPERS ARE INSTALLED ABOVE HARD CEILINGS OR IN SOFFITS EVEN IF NOT STATED ON PLANS.ELBOWS OR CHANGES IN DUCT DIRECTION GREATER THAN 45 DEGREES SHALL BE FITTED WITH AIR TURNS CONSISTING OF CURVED AIRFOIL BLADES OR VANES WHICH WILL PERMIT THE AIR TO MAKE ABRUPT TURNS WITHOUT APPRECIABLE TURBULENCE.
5. ELBOWS OR CHANGES IN DUCT DIRECTION GREATER THAN 45 DEGREES SHALL BE FITTED WITH AIR TURNS CONSISTING OF CURVED AIRFOIL BLADES OR VANES WHICH WILL PERMIT THE AIR TO MAKE ABRUPT TURNS WITHOUT APPRECIABLE TURBULENCE. LONG RADIUS TURNS ARE AN ACCEPTABLE SUBSTITUTE IF SPACE PERMITS.

- SHEET METAL DUCTWORK: SHALL BE CONSTRUCTED PER THE APPROPRIATE SMACNA DESIGN STANDARDS, MEETING THE MINIMUM GAUGE SHEET METAL THICKNESS SPECIFIED. INSULATE INTERNALLY OR EXTERNALLY WITH FIBERGLASS INSULATION TO ACHIEVE A MINIMUM R-VALUE OF 7.0 UNLESS INSTALLED IN A MECHANICALLY COOLED SPACE OR BETWEEN COOLED FLOORS IN A CAVITY WHOSE EXTERIOR WALLS ARE INSULATED, IN WHICH CASE THE R-VALUE MAY BE 4.2.

- FIBERGLASS DUCTWORK: SHALL BE CONSTRUCTED OF FIBERGLASS FIBERBOARD DUCTWORK TO BE A MINIMUM OF 1" THICK. FIBERGLASS DUCTWORK SHALL BE LINED WITH ANTI MICROBIAL INSULATION EQUAL TO JOHNS-MANVILLE SUPERDUCT. INSULATE FIBERGLASS SUPPLY AND RETURN DUCTS TO A MINIMUM R-VALUE OF 7.0 UNLESS INSTALLED IN A MECHANICALLY COOLED SPACE OR BETWEEN COOLED FLOORS IN A CAVITY WHOSE EXTERIOR WALLS ARE INSULATED, IN WHICH CASE THE R-VALUE MAY BE 4.2.

- FLEXIBLE DUCTWORK SHALL BE SPIRAL FORMED OUT OF 3003 BRIGHT REFLECTIVE FINISHED ALUMINUM ALLOY, MECHANICALLY LOCKED AND HAVE A MINIMUM R-VALUE OF 6.0. IT SHALL BE UL LISTED UNDER CLASS 1 AIR DUCTS AND CLASS 1 CONNECTORS, MEET ALL REQUIREMENTS OF UL 181 AND COMPLY WITH NFPA 90A AND NFPA 90B.

- ROUND SPIRAL DUCTWORK: SHALL BE CONSTRUCTED PER THE APPROPRIATE SMACNA DESIGN STANDARDS, MEETING THE MINIMUM GAUGE SHEET METAL THICKNESS SPECIFIED AND SHALL BE A MINIMUM 1" DOUBLE WALL INTERNALLY INSULATED. NON INSULATED SPIRAL DUCTWORK WILL NOT BE ACCEPTED AS A SUBSTITUTION.

VIBRATION ISOLATION:

ALL BLOWER UNITS AND VIBRATING TYPE EQUIPMENT SHALL BE PROPERLY FITTED WITH MASON INDUSTRIES VIBRATION ISOLATION EQUIPMENT SIZED IN ACCORDANCE WITH EQUIPMENT WEIGHT AND DUTY.

PROVIDE FLEXIBLE CONNECTORS AT ALL SUPPLY AND RETURN CONNECTIONS TO AIR HANDLING EQUIPMENT CONSISTING OF HEAVY CANVAS OR NEOPRENE FABRIC WITH AIRTIGHT SEAMS AND CONNECTIONS TO THE EQUIPMENT.

AIR FILTERS:

FILTERS SHALL BE 1" FIBERGLASS MEDIA THROW AWAY TYPE IN A RIGID FRAME WITH A SUPPORTING MAZE ACROSS BOTH ENTERING AND LEAVING SURFACES. SUPPLY ONE COMPLETE SET OF FILTERS AFTER OWNER'S FINAL ACCEPTANCE. FARR 30/30 OR EQUAL.

HEAT PUMP UNIT INSTALLATION:

PROVIDE CONCRETE PADS FOR GRADE MOUNTED CONDENSING UNITS. PADS SHALL BE A MINIMUM OF 4" THICK, 3,000 PSI CONCRETE, AND SHALL BE 4" LARGER ON EACH SIDE THAN THE FOOTPRINT OF THE CONDENSING UNIT. VERIFY UNIT DIMENSIONS WITH APPROVED SHOP DRAWINGS PRIOR TO FABRICATION OF PADS.

SUSPENDED UNITS SHALL BE SUPPORTED IN APPROVED MANNER AND IN ACCORDANCE WITH AIR HANDLING UNIT SUPPORT DETAIL. PROVIDE AUXILIARY OVERFLOW DRAIN PAN WITH FLOAT SWITCH WHERE REQUIRED.

ALL AIR HANDLING UNITS AND CONDENSING UNITS SHALL BE INSTALLED WITH MANUFACTURER REQUIRED MINIMUM MAINTENANCE CLEARANCES. PROVIDE MAN SIZED ACCESS PANEL WHERE REQUIRED.

FIRE DAMPERS:

FIRE DAMPERS SHALL BE TYPE "B" CURTAIN TYPE, SUITABLE FOR EITHER VERTICAL OR HORIZONTAL INSTALLATION WITH 20 GAUGE STEEL CHANNEL FRAMES, 24 GAUGE STEEL BLADES, AND 18 GAUGE STEEL ENCLOSURE WITH DUCT COLLARS. ALL PARTS GALVANIZED MILL FINISH.

FIRE DAMPERS SHALL BE EQUAL TO RUSKIN TYPE 1BD2 FOR WALLS UP TO 2 HOUR.

INSTALL IN ACCORDANCE WITH NFPA-90A, TESTED IN ACCORDANCE WITH UL SAFETY STANDARD 555, 1-1/2 HOUR AND 4 HOUR PROTECTION, AND 165'F FUSIBLE LINK.

NOTE:
ALL OF THE SPECIFICATIONS LISTED ON THIS SHEET MAY NOT BE USED FOR THIS PROJECT.

PERMIT REVIEW STAMP

ISSUE HISTORY

No.	Date	Description
1	10/06/2017	COORDINATION SET
2	11/10/2017	75%-90% REVIEW COORD. SET

REVISION HISTORY

No.	Date	Description

© 2015 These drawings and Specifications are the property of FUGLEBERG KOCH, PLLC (+ADD0010) and are loaned only for the specific project noted on these drawings. Any reproductions, revisions, or modifications of these documents without the expressed written consent of Fugleberg Koch, PLLC is prohibited by law.

FUGLEBERG KOCH
2555 Temple Trail, Winter Park, FL 32789 (407) 629-0595
www.fuglebergkoch.com BR569

CONSULTANT
Joseph, Lawrence & Co
Consulting Engineers
1180 HARWOOD AVE. SUITE 3000
ALTAMONTE SPRINGS, FLORIDA 32714
TEL 321.972.4466
WWW.JLCENG.COM
CA NO. 28730

JLC 17.0137.00

Adam Joseph Barney
P.E. #:69124

SUMMER BAY APTS. II
LAKE COUNTY, FL

Drawn:	MJR/KCM
Checked:	BLS/AJB
Approval:	BLS/AJB
Date:	11/10/2017
Project #:	5389

SPECIFICATIONS - MECHANICAL

M8.01

REFERENCE NOTES: (X)

1. ROUTE 12"ø OUTSIDE AIR DUCT FROM AHU ABOVE CEILING SPACE TO BUIDING SIDEWALL. PROVIDE MOTORIZED DAMPER. TERMINATE WITH LOUVER WITH INTEGRAL BACKDRAFT DAMPER AND BIRDSCREEN.
2. MOUNT AHU PER DETAIL ON SHEET M12.03 AND ROUTE REFRIGERANT PIPING TO EXTERIOR CONDENSING UNIT.
3. PAD MOUNT EXTERIOR CONDENSING UNIT PER DETAIL ON SHEET M12.03.
4. ROUTE CONDENSATE THROUGH SLAB AND DRAIN ON GRADE IN GREENSPACE.
5. PROVIDE NEW FULLY DIGITAL 7 DAY PROGRAMMABLE TYPE THERMOSTAT WITH AUTO CHANGE OVER AND AUTO SET BACK. MOUNT THERMOSTAT 48" ABOVE FINISHED FLOOR. PROVIDE WITH CLEAR ACRYLIC LOCKING COVER.
6. ROUTE 3"ø RESTROOM EXHAUST AIR DUCT ABOVE CEILING SPACE TO BUILDING SIDEWALL. TERMINATE WITH WALL CAP WITH INTEGRAL BACKDRAFT DAMPER AND BIRDSCREEN PER DETAIL SHEET M12.03.

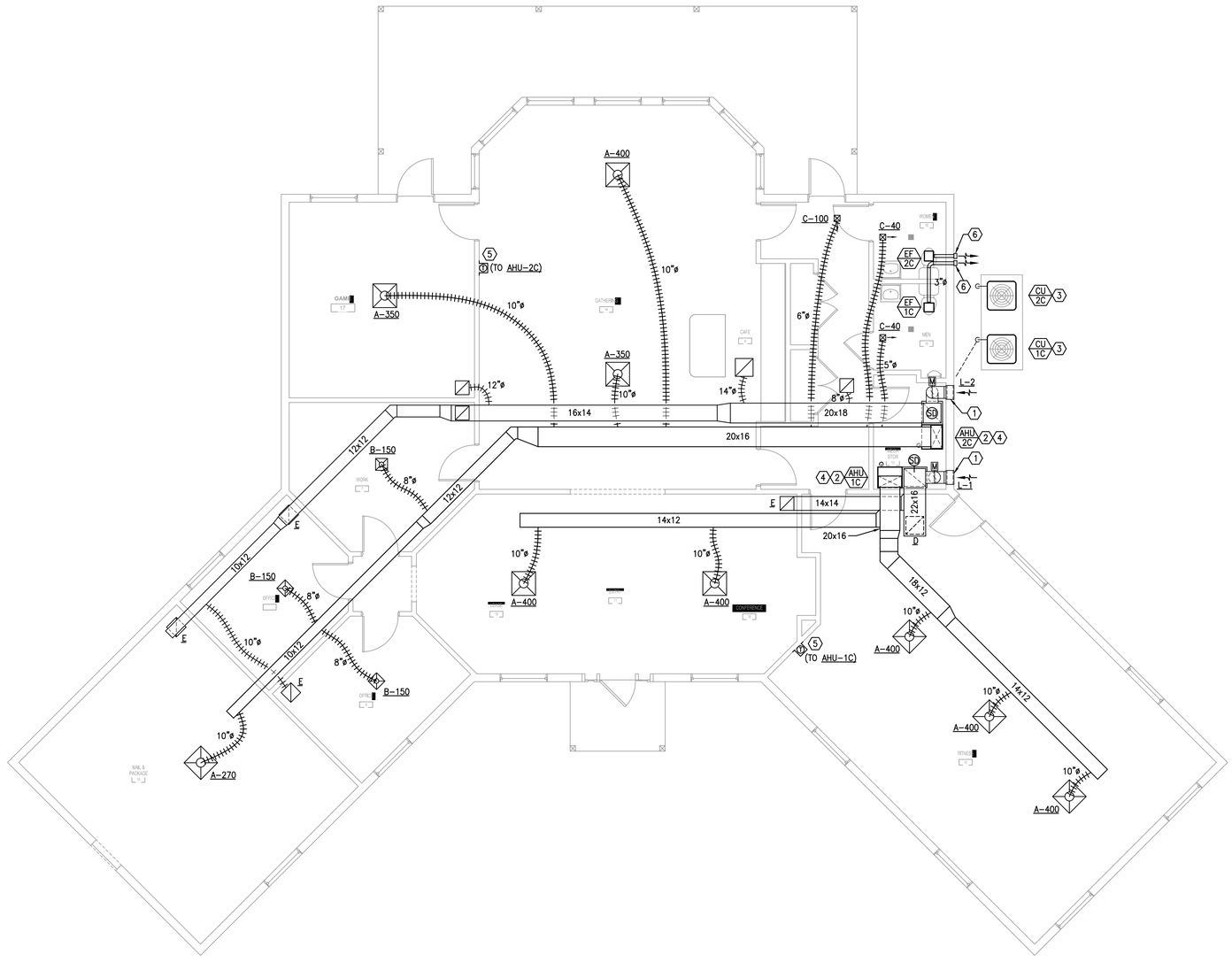

H1 CLUBHOUSE FLOOR PLAN - MECHANICAL
3/16" = 1'-0"

PERMIT REVIEW STAMP

ISSUE HISTORY

No.	Date	Description
1	10/06/2017	COORDINATION SET
2	11/10/2017	75%-90% REVIEW COORD. SET

REVISION HISTORY

No.	Date	Description

© 2015 These documents and their contents are the property of FUGLEBERG KOCH, PLLC - AA26002103, and are issued only for the specific project noted on these drawings. Any reproductions, revisions, or modifications of these documents without the expressed written consent of Fugleberg Koch, PLLC is prohibited by law.

FUGLEBERG KOCH
2555 Temple Trail, Winter Park, FL 32789 (407) 629-0595
www.fuglebergkoch.com BR569

CONSULTANT
Joseph, Lawrence & Co
Consulting Engineers
1180 HARWOOD AVE. SUITE 3000
ALTAMONTE SPRINGS, FLORIDA 32714
TEL: 321.972.4466
WWW.JLCENG.COM
CA NO. 28730

JLC 17.0137.00

Adam Joseph Barney
P.E. #:69124

SUMMER BAY APTS. II
LAKE COUNTY, FL

Drawn:	MJR/KCM
Checked:	BLS/AJB
Approval:	BLS/AJB
Date:	11/10/2017
Project #:	5389

CLUBHOUSE FLOOR PLAN - MECHANICAL

M12.01

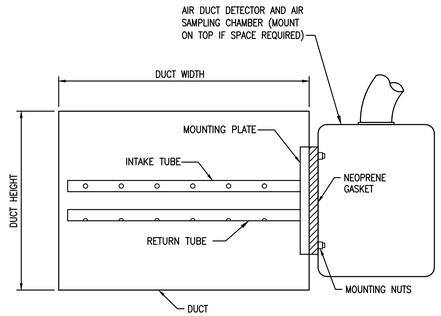

NOTES:

1. INSTALL IN STRICT ACCORDANCE WITH MANUFACTURERS INSTALLATION INSTRUCTIONS.
2. PROVIDE ACCESS DOOR AT SAMPLING TUBES.

3 SMOKE DETECTOR DETAIL
NTS

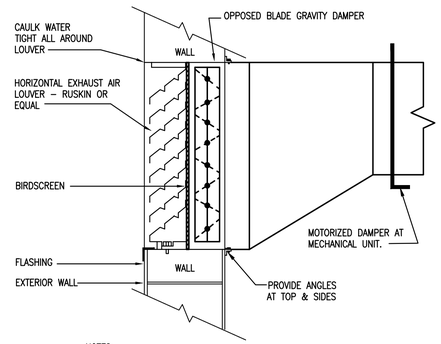

NOTES:

1. PROTECT OPENING PER FLORIDA BUILDING CODE – MECHANICAL SECTION 401.5 AND 401.6

2 SIDEWALL LOUVER DETAIL
NTS

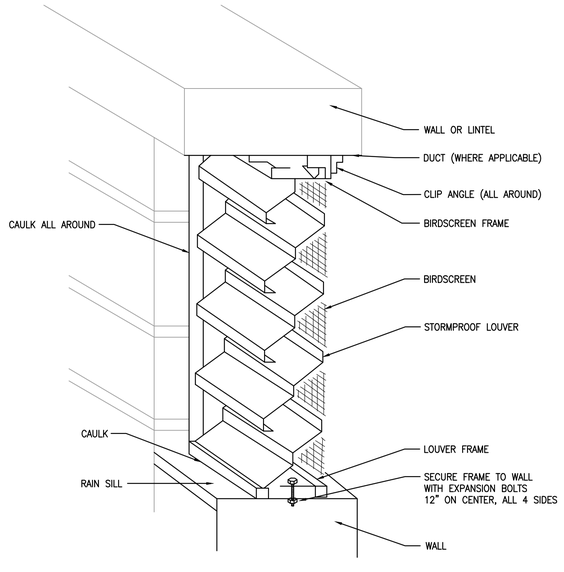

1 TYPICAL WALL LOUVER DETAIL
NTS

FLEX DUCT SCHEDULE

CFM	FLEX SIZE
0 – 35	4"ø
36 – 60	5"ø
61 – 100	6"ø
101 – 140	7"ø
141 – 210	8"ø
211 – 280	9"ø
281 – 400	10"ø
401 – 600	12"ø
601 – 900	14"ø
901 – 1,300	16"ø
1,300 – 1,700	18"ø

AIR BALANCE

EXHAUST:

EF–1C	60 CFM
EF–2C	60 CFM
EXHAUST TOTAL:	120 CFM

MAKEUP AIR:

AHU–1C	450 CFM
AHU–2C	340 CFM
MAKEUP TOTAL:	790 CFM

BLDG. PRESSURE = +670 (WITH ALL FANS ACTIVATED)

OUTSIDE AIR CALCULATIONS

CLASSIFICATION	OCC. FACTOR OCCUPANCY/ 1000 SQFT. (PERSONS)	AHRAE 62 VALUES PER TABLE 6–1 Rp	Ra	SPACE AREA (SQFT) Az	SPACE LOAD (PERSONS) Pz	OUTDOOR AIR REQUIRED (CFM)	OUTDOOR AIR SUPPLIED (CFM)
GAME	20	7.5	0.18	257	5	83.7	85
GATHERING	100	7.5	0.06	773	25*	233.8	170
FITNESS	40	20	0.06	756	20*	445.3	450
LEASING AREA	5	5	0.06	894	3*	71	75
CORRIDOR	–	–	0.06	152	–	9.1	10
TOTAL				2,832	50	842.9	790

NOTE:

REQUIRED OUTDOOR VENTILATION AIR VALUES TAKEN FORM ASHRAE 62, TABLE 6–1.
VENTILATION BREATHING ZONE FORMULA: Vbz = Rp * Pz + Ra * Az
Pz = OCCUPANCY FACTOR * SPACE AREA

* SPACE LOAD NUMBER BY ARCHITECT

LOUVER SCHEDULE

MARK	SERVICE	AIR FLOW (CFM)	FREE AREA (SF)	W x H (IN)	MAX. VELOCITY IN FPM	MAX. PRESSURE DROP (IN H20)	MANUFACTURER & MODEL NO.	NOTES
L–1	OUTSIDE AIR	450	0.9	18"x18"	500	0.36	RUSKIN ELF3675DXD	1. & 2.
L–2	OUTSIDE AIR	370	0.74	18"x18"	500	0.36	RUSKIN ELF3675DXD	1. & 2.

NOTES:
1. PROVIDE BIRD SCREEN.
2. PROVIDE GRAVITY BACK DRAFT DAMPER ON INTERIOR SIDE OF LOUVER.

AIR DEVICE SCHEDULE

MARK	DESCRIPTION	FACE SIZE	NECK	MATERIAL	MANUFACTURER & MODEL NO.	NOTES
A	SUPPLY DIFFUSER – CEILING	24"x24"	SEE PLAN	ALUMINUM	METALAIRE 5000–1	1. & 2.
B	SUPPLY DIFFUSER – CEILING	12"x12"	SEE PLAN	ALUMINUM	METALAIRE 5000–1	1. & 2.
C	SUPPLY DIFFUSER – CEILING	6"x6"	SEE PLAN	ALUMINUM	METALAIRE LM–1	1. & 2.
D	LOUVERED RETURN AIR GRILLE	18"x18"	SEE PLAN	ALUMINUM	METALAIRE RH	1. & 2.
E	LOUVERED RETURN AIR GRILLE	14"x14"	SEE PLAN	ALUMINUM	METALAIRE RH	1. & 2.

NOTES:
1. COORIDINATE SURFACE FINISHES WITH ARCHITECTURAL DRAWINGS.

FAN SCHEDULE

MARK	AREA SERVED	TYPE	CFM	T.S.P.	WATTS	R.P.M.	VOLTS/PH	SONES	MANUFACTURER & MODEL NO.	NOTES
EF–1C	MEN 16	CABINET	60	0.25	50	2,175	120/1ø	4.0	AIRKING AS70	1 2 & 4
EF–2C	WOMEN 15	CABINET	60	0.25	50	2,175	120/1ø	4.0	AIRKING AS70	1 2 & 4

NOTES:
1. EXHAUST FAN TO BE CONTROLLED BY INDIVIDUAL SWITCH.
2. PROVIDE WITH VIBRATION ISOLATOR KIT, INTEGRAL BACKDRAFT DAMPER, & ALUMINUM WALL CAP.
3. FAN TO BE CONTROLLED BY OCCUPANCY SENSOR.
4. PROVIDE WITH FACTORY SPEED CONTROLLER.

DX SPLIT AIR HANDLING UNIT SCHEDULE

MARK	LOCATION SERVED	FAN TOTAL AIR FLOW (CFM)	FAN OUTSIDE AIR FLOW (CFM)	FAN EXTERNAL STATIC PRESS. (IN.WG.)	FAN DRIVE TYPE	FAN HP	COOLING COIL ENTERING AIR TEMP. (F° DB/WB)	COOLING COIL LEAVING AIR TEMP. (F° DB/WB)	COOLING COIL TOTAL CAPACITY (BTUH)	FILTERS TYPE	FILTERS EFFICIENCY	FILTERS THICKNESS	ELECTRIC HEATING COIL NO. OF STAGES	ELECTRIC HEATING COIL TOTAL KW	ELECTRIC HEATING COIL VOLTAGE/ PHASE	SINGLE POINT UNIT ELEC. REQUIREMENTS SINGLE CIRCUIT MCA	SINGLE POINT UNIT ELEC. REQUIREMENTS SINGLE CIRCUIT MOCP	UNIT INFORMATION UNIT SIZE (H"xW"xD")	UNIT INFORMATION OPERATING WEIGHT (LBS.)	UNIT INFORMATION MANUFACTURER	UNIT INFORMATION MODEL NUMBER	NOTES
AHU–1C	ENTRY, FITNESS	2,000	450	0.3	DIRECT	1	77.6/64.7	56.0/54.0	60,000	THROWAWAY	25%–30%	1"	1	8	240/1	45	45	58"x24.5"x21"	167	GOODMAN	ASPT61D14	1, 2
AHU–2C	GATHERING, GAME	2,000	340	0.3	DIRECT	1	77.6/64.7	56.0/54.0	60,000	THROWAWAY	25%–30%	1"	1	8	240/1	45	45	58"x24.5"x21"	167	GOODMAN	ASPT61D14	1, 2

NOTES:
1. PROVIDE COMPLETE WITH DISCONNECT SWITCH AND 7–DAY PROGRAMMABLE THERMOSTAT WITH NIGHT SET BACK.
2. ROUTE AND SIZE REFRIGERANT LINES PER MANUFACTURES REQUIREMENTS.

DX SPLIT CONDENSING UNIT SCHEDULE (HEAT PUMP)

MARK	LOCATION	COMPRESSOR OUTDOOR DESIGN TEMP. (F°)	COMPRESSOR QTY.	COMPRESSOR CAPACITY STEPS %	CONDENSER FANS QTY.	CONDENSER FANS NOMINAL HP	ELECTRICAL VOLTAGE/ PHASE	ELECTRICAL COMPRESSOR RLA EACH	ELECTRICAL CONDENSER FANS QTY.	ELECTRICAL CONDENSER FANS FLA (EA.)	ELECTRICAL MCA	ELECTRICAL MOCP	ELECTRICAL SEER	UNIT INFORMATION UNIT SIZE (H"xW"xD")	UNIT INFORMATION OPERATING WEIGHT (LBS.)	MANUFACTURER	MODEL NUMBER	NOTES
CU–1C	EXTERIOR	95°	1	100	1	1/4	208/1	25.0	1	1.5	32.8	50	14	38"x35"x35"	260	GOODMAN	GSZ140601AA	1
CU–2C	EXTERIOR	95°	1	100	1	1/4	208/1	25.0	1	1.5	32.8	50	14	38"x35"x35"	260	GOODMAN	GSZ140601AA	1

NOTES:
1. PROVIDE COMPLETE WITH DISCONNECT SWITCH, TIME DELAY RELAY AND ANTI–SHORT CYCLE TIMER.

PERMIT REVIEW STAMP

ISSUE HISTORY

No.	Date	Description
1	10/06/2017	COORDINATION SET
2	11/10/2017	75%–90% REVIEW COORD. SET

REVISION HISTORY

No.	Date	Description

© 2015 These drawings and plans are the property of FUGLEBERG KOCH, P.L.C. (4250013) and are issued only for the specific project noted on these drawings. Any reproductions, revisions, or modifications of these documents without the expressed written consent of Fugleberg Koch, P.L.C. is prohibited by law.

FUGLEBERG KOCH
2555 Temple Trail, Winter Park, FL 32789 (407) 629-0595
www.fuglebergkoch.com BR569

CONSULTANT

Joseph, Lawrence & Co
Consulting Engineers
1180 HARWOOD AVE. SUITE 3000
ALTAMONTE SPRINGS, FLORIDA 32714
TEL: 321.972.4466
WWW.JLCENG.COM
CA NO. 28730

JLC 17.0137.00

Adam Joseph Barney
P.E. #:69124

SUMMER BAY APTS. II
LAKE COUNTY, FL

Drawn:	MJR/KCM
Checked:	BLS/AJB
Approval:	BLS/AJB
Date:	11/10/2017
Project #:	5389

CLUBHOUSE MECHANICAL SCHEDULES & DETAILS

M12.02

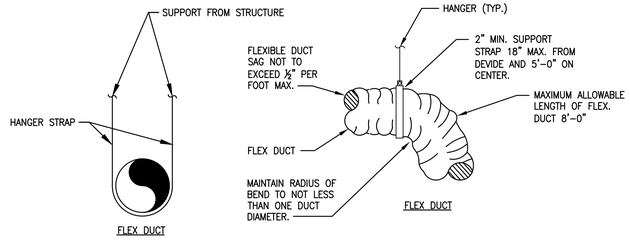

NOTES:

1. MAXIMUM SPACING BETWEEN HANGER LOCATIONS SHALL BE 5'-0".
2. STRAPS SHALL BE MINIMUM 1 1/2".
3. REFER TO SMACNA AND FLORIDA MECHANICAL CODE FOR ADDITIONAL REQUIREMENTS.

5 NTS FLEX DUCT HANGER DETAIL

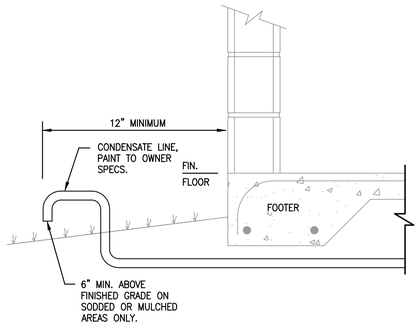

7 NTS CONDENSATE DRAIN TERMINATION DETAIL

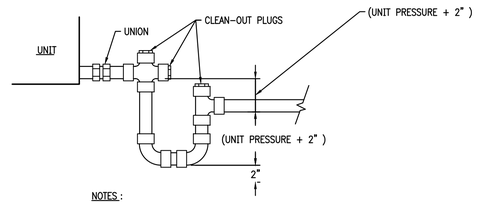

NOTES :

1. CONDENSATE DRAIN SHALL BE PIPED FULL SIZE OF UNIT CONNECTION.
2. CONDENSATE PANS SHALL BE INSTALLED WITH ADEQUATE PITCH TO ENSURE POSITIVE DRAINAGE OF ACCUMILATED CONDENSATE.
3. TRAP CONDENSATE AND DISCHARGE PER PLAN.

6 NTS CONDENSATE DRAIN DETAIL

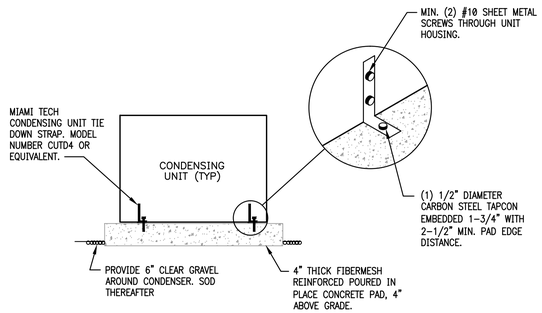

4 NTS TYP. CONC. PAD MOUNTED CU DETAIL

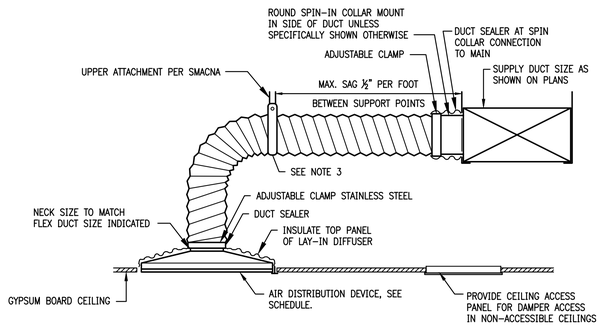

NOTES:

1. FLEXIBLE DUCTS SHALL BE ONE-PIECE AND SHALL NOT BE SPLICED TOGETHER.
2. EXTEND FLEXIBLE DUCT INSULATION TO DUCT/DIFFUSER PANEL INSULATION AND SEAL WITH MASTIC.
3. MINIMUM 1-1/2" WIDE 22 GAUGE GALVANIZED STRAP HANGER WITH HEMMED EDGES PER SMACNA FIGURE 3-10.
4. FLEXIBLE AIR DUCT SHALL BE FULLY EXTENDED AND NOT COMPRESSED WITH ELBOW RADIUS NO LESS THAN R/D=1.0.

3 NTS FLEXIBLE DUCT DETAIL

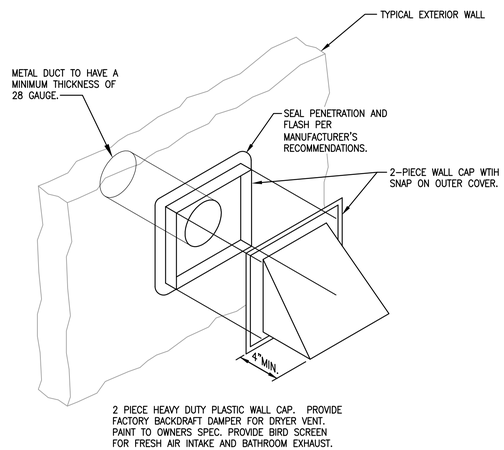

2 PIECE HEAVY DUTY PLASTIC WALL CAP. PROVIDE FACTORY BACKDRAFT DAMPER FOR DRYER VENT. PAINT TO OWNERS SPEC. PROVIDE BIRD SCREEN FOR FRESH AIR INTAKE AND BATHROOM EXHAUST.

2 NTS TYPICAL WALL JACK DETAIL

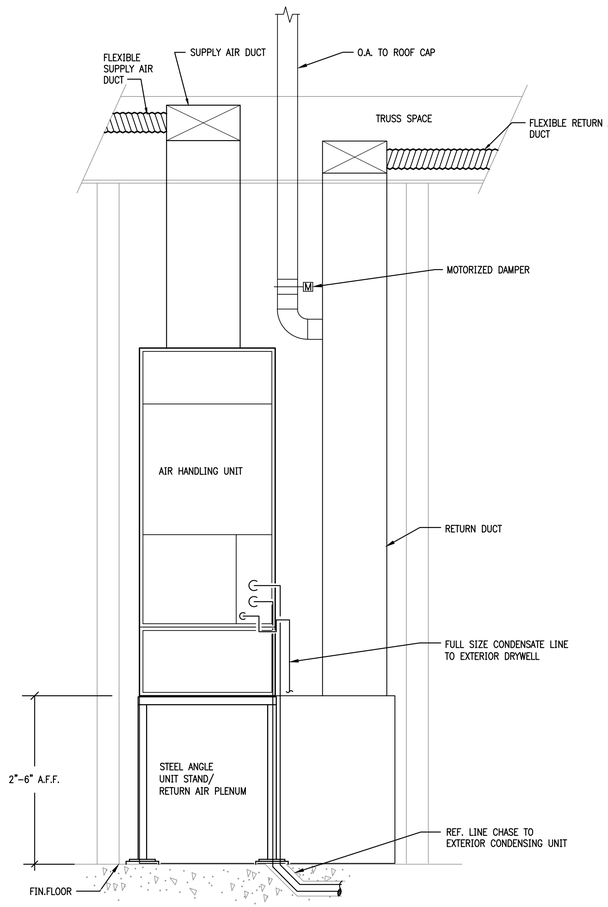

1 NTS VERTICAL AHU DETAIL

PERMIT REVIEW STAMP

ISSUE HISTORY

No.	Date	Description
1	10/06/2017	COORDINATION SET
2	11/10/2017	75%-90% REVIEW COORD. SET

REVISION HISTORY

No.	Date	Description

FUGLEBERG KOCH

2555 Temple Trail, Winter Park, FL 32789 (407) 629-0595
www.fuglebergkoch.com BR569

CONSULTANT

Joseph, Lawrence & Co Consulting Engineers
1180 HARWOOD AVE SUITE 3000
ALTAMONTE SPRINGS, FLORIDA 32714
TEL: 321.972.4466
WWW.JLCENG.COM
CA NO. 28730

JLC 17.0137.00

Adam Joseph Barney
P.E. #:69124

SUMMER BAY APTS. II

LAKE COUNTY, FL

Drawn:	MJR/KCM
Checked:	BLS/AJB
Approval:	BLS/AJB
Date:	11/10/2017
Project #:	5389

CLUBHOUSE MECHANICAL DETAILS

M12.03

© 2015 These documents and their contents are the property of KCK-EBERG KOCH, PLLC - A20000103 - and are issued only for the specific project noted on these drawings. Any reproductions, revisions, or modifications of these documents without the expressed written consent of Fugleberg Koch, PLLC is prohibited by law.

FAN SCHEDULE

MARK	AREA SERVED	TYPE	CFM	T.S.P.	WATTS/HP	R.P.M.	VOLTS/PH	SONES	MANUFACTURER & MODEL NO.	NOTES
EF-1	MAINTENANCE GARAGE	PROPELLER	3,000	0.15	1/4 HP	940	120/1ø	15.2	COOK 20XMP	1.

NOTES:
1. FAN TO BE CONTROLLED BY TIME CLOCK. TIME CLOCK TO BE SET WHILE GOLF CARTS ARE CHARGING.

LOUVER SCHEDULE

MARK	SERVICE	AIR FLOW (CFM)	FREE AREA (SF)	W x H (IN)	MAX. VELOCITY IN FPM	MAX. PRESSURE DROP (IN H20)	MANUFACTURER & MODEL NO.	NOTES
L-1	OUTSIDE AIR	1,500	2.92	36"x24"	515	0.36	RUSKIN ELF3675DXD	1.
L-2	OUTSIDE AIR	1,500	2.92	36"x24"	515	0.36	RUSKIN ELF3675DXD	1.

NOTES:
1. PROVIDE BIRD SCREEN AND GRAVITY BACKDRAFT DAMPER.

REFERENCE NOTES: (X)

(1) PROVIDE THRU WALL A/C UNIT EQUAL TO GE AJEQ10DCE OR EQUAL.

(2) 36"x24" MIAMI DADE APPROVED LOUVER. PROVIDE BIRDSCREEN.

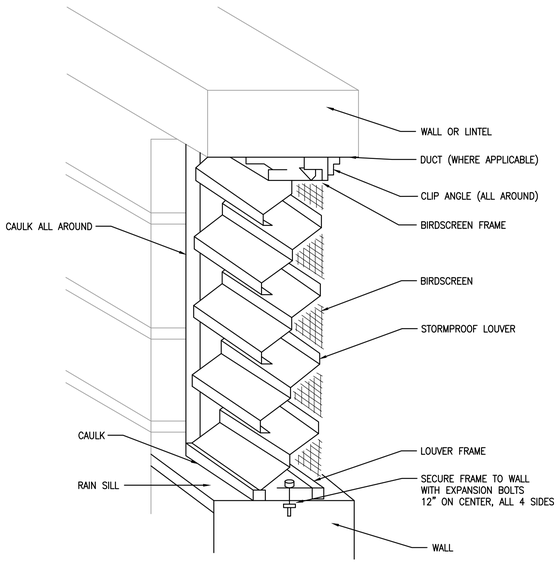

3 NTS TYPICAL WALL LOUVER DETAIL

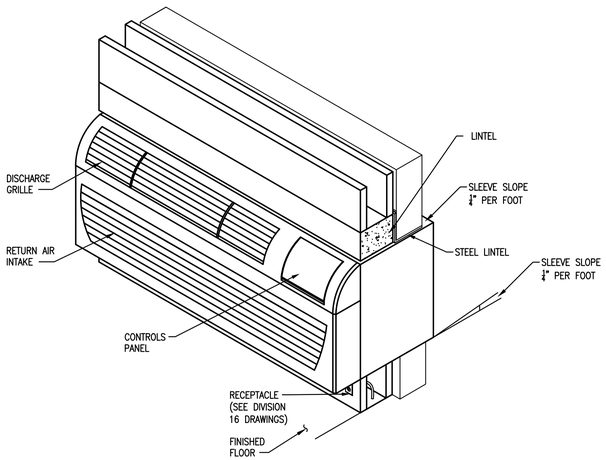

2 NTS UNDER WINDOW PTAC DETAIL

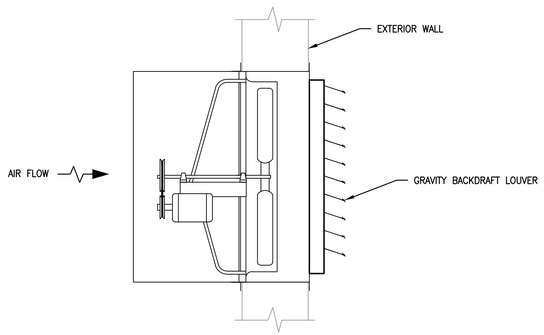

1 NTS PROPELLER FAN DETAIL

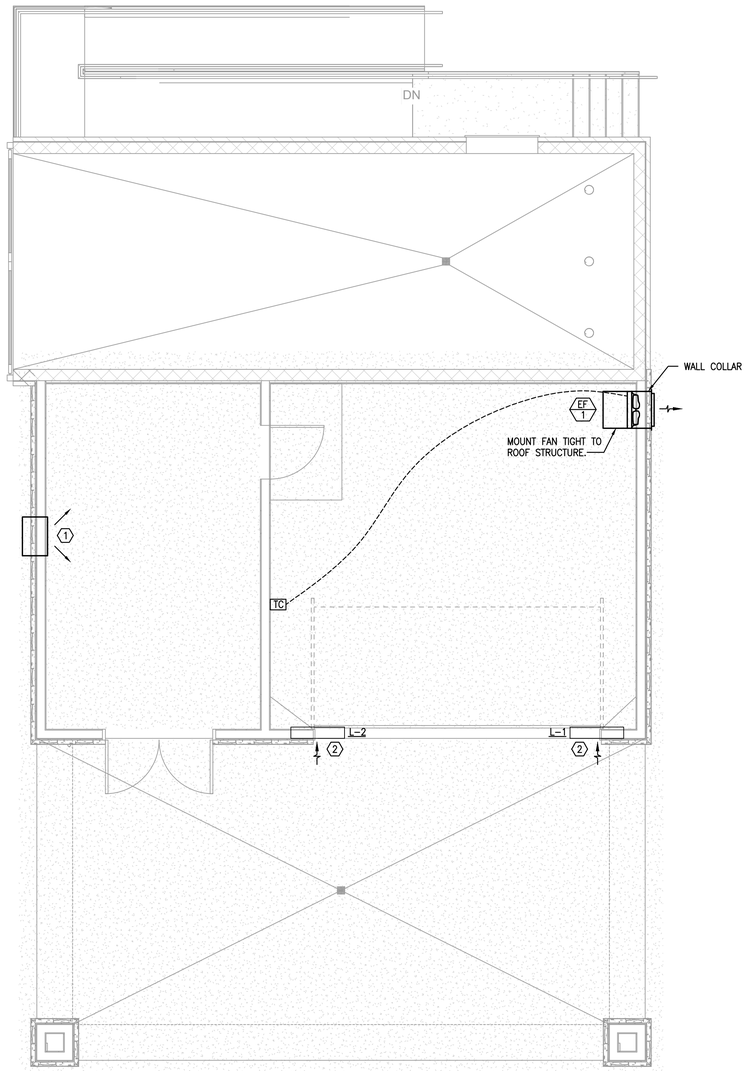

G5 MAINTENANCE FLOOR PLAN - MECHANICAL
1/4" = 1'-0"

PERMIT REVIEW STAMP

ISSUE HISTORY

No.	Date	Description
1	10/06/2017	COORDINATION SET
2	11/10/2017	75%-90% REVIEW COORD. SET

REVISION HISTORY

No.	Date	Description

© 2015 These documents are and shall remain the property of FUGLEBERG KOCH, P.L.C. • 4250001320 and are treated as for the specific project cited on these drawings. Any reproductions, revisions, or modifications of these documents without the expressed written consent of Fugleberg Koch, P.L.C. is prohibited by law.

FUGLEBERG KOCH
2555 Temple Trail, Winter Park, FL 32789 (407) 629-0595
www. fuglebergkoch.com BR569

CONSULTANT
Joseph, Lawrence & Co Consulting Engineers
1180 HARWOOD AVE. SUITE 3000
ALTAMONTE SPRINGS, FLORIDA 32714
TEL: 321.972.4466
WWW.JLCENG.COM
CA NO. 28730

JLC 17.0137.00

Adam Joseph Barney
P.E. #:69124

SUMMER BAY APTS. II
LAKE COUNTY, FL

Drawn:	MJR/KCM
Checked:	BLS/AJB
Approval:	BLS/AJB
Date:	11/10/2017
Project #:	5389

MAINTENANCE FLOOR PLAN - MECHANICAL

M12.04

REFERENCE NOTES: (X)

1. CEILING MOUNTED EXHAUST FAN WITH BACKDRAFT DAMPER. ROUTE GALVANIZED STEEL DUCT AND TERMINATE WITH PLASTIC WALL CAP PER DETAIL THIS SHEET.
2. 12"x12" DOOR LOUVER, METALAIRE SERIES DGDF OR APPROVED EQUAL.

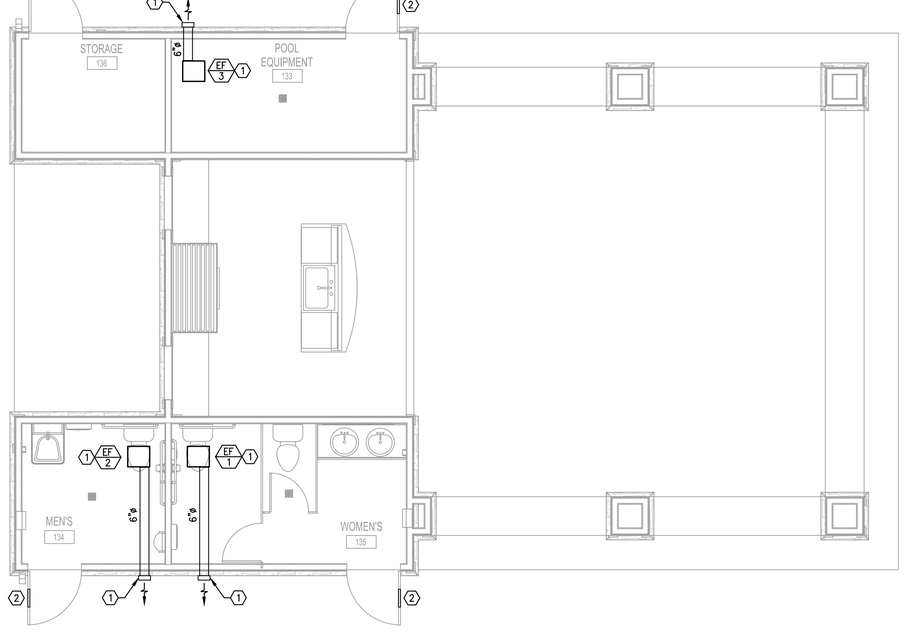

D5 POOL PAVILION FLOOR PLAN - MECHANICAL
1/4" = 1'-0"

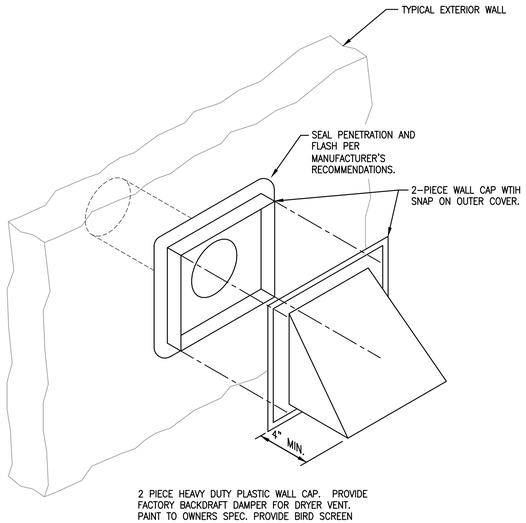

2 PIECE HEAVY DUTY PLASTIC WALL CAP. PROVIDE FACTORY BACKDRAFT DAMPER FOR DRYER VENT. PAINT TO OWNERS SPEC. PROVIDE BIRD SCREEN FOR FRESH AIR INTAKE AND BATHROOM EXHAUST.

1 NTS TYPICAL WALL JACK DETAIL
(UNITS)

FAN SCHEDULE

MARK	AREA SERVED	TYPE	CFM	T.S.P.	WATTS/HP	R.P.M.	VOLTS/PH	SONES	MANUFACTURER & MODEL NO.	NOTES
EF-1	WOMEN'S RR	CABINET	100	0.25	75.2 WATTS	929	120/1ø	1.9	COOK GC-144	1.
EF-2	MEN'S RESTROOM	CABINET	75	0.25	52.7 WATTS	594	120/1ø	.2	COOK GC-144	1.
EF-3	POOL EQUIPMENT	CABINET	75	0.25	52.7 WATTS	594	120/1ø	.2	COOK GC-144	2.

NOTES:
1. FAN TO BE CONTROLLED BY INDIVIDUAL LIGHT SWITCH.
2. FAN TO BE CONTROLLED BY THERMOSTAT. SETPOINT TO BE SET AT 80 DEGREES FAHRENHEIT.

PERMIT REVIEW STAMP

ISSUE HISTORY

No.	Date	Description
1	10/06/2017	COORDINATION SET
2	11/10/2017	75%-90% REVIEW COORD. SET

REVISION HISTORY

No.	Date	Description

FUGLEBERG KOCH
2555 Temple Trail, Winter Park, FL 32789 (407) 629-0595
www.fuglebergkoch.com BR569

CONSULTANT
Joseph, Lawrence & Co
Consulting Engineers
1180 HARWOOD AVE. SUITE 3000
ALTAMONTE SPRINGS, FLORIDA 32714
TEL: 321.972.4466
WWW.JLCENG.COM
CA NO. 28730

JLC 17.0137.00

Adam Joseph Barney
P.E. #:69124

SUMMER BAY APTS. II
LAKE COUNTY, FL

Drawn:	MJR/KCM
Checked:	BLS/AJB
Approval:	BLS/AJB
Date:	11/10/2017
Project #:	5389

POOL PAVILION FLOOR PLAN - MECHANICAL

M13.01

© 2015 These documents and their contents are the property of FUGLEBERG KOCH, PLLC - AA26002103, and are issued only for the specific project noted on these drawings. Any reproductions, revisions, or modifications of these documents without the expressed written consent of Fugleberg Koch, PLLC is prohibited by law.

LEGEND

- DIRECTION OF FLOW IN PIPE
- PITCH PIPE DOWN IN DIRECTION OF ARROW
- PIPE UP
- PIPE DOWN
- EJ — EXPANSION JOINT
- FLEXIBLE PIPE CONNECTOR
- BALL VALVE
- CHECK VALVE, HORIZONTAL SWING
- GATE VALVE
- BUTTERFLY VALVE
- GLOBE VALVE
- BALANCING VALVE
- BC — BALANCING COCK
- STRAINER, Y-TYPE AND BLOWOFF VALVE
- RV — PRESSURE RELIEF VALVE (WATER)
- PRV — PRESSURE REDUCING VALVE
- MAV — MANUAL AIR VENT
- SOLENOID VALVE
- VALVE OS & Y
- CAPPED LINE
- SAN — SANITARY SEWER (ABOVE GRADE)
- SAN — SANITARY SEWER (BELOW GRADE)
- DOMESTIC COLD WATER
- BP — BOOSTED PRESSURE DOMESTIC COLD WATER
- DOMESTIC HOT WATER
- DOMESTIC HOT WATER RETURN
- CD — CONDENSATE DRAIN (BELOW GRADE)
- CD — CONDENSATE DRAIN (ABOVE GRADE)
- ST — STORM SEWER (BELOW GRADE)
- ST — STORM SEWER (ABOVE GRADE)
- EO — STORM EMERGENCY OVERFLOW PIPING
- GR — GREASE SEWER (BELOW GRADE)
- GR — GREASE SEWER (ABOVE GRADE)
- SCW — SOFT COLD WATER
- VENT
- G — GAS LINE (BELOW GRADE)
- G — GAS LINE (ABOVE GRADE)
- POINT OF CONNECTION NEW TO EXISTING
- POINT OF REMOVAL FOR DEMOLITION
- ΔT — DELTA T (TEMPERATURE DIFFERENCE)
- A / 1 — PHOTO DETAIL OR SECTION IDENTIFICATION TARGET
  A = DETAIL NUMBER.
  B = SHEET NUMBER ON WHICH DETAIL IS LOCATED.
- HB — HOSE BIBB
- FD — FLOOR DRAIN
- HD — HUB DRAIN
- TD — TRENCH DRAIN
- A — COMPRESSED AIR (BELOW GRADE)
- A — COMPRESSED AIR (ABOVE GRADE)
- FLOOR CLEANOUT
- CLEANOUT
- EXTERIOR CLEANOUT
- HORIZONTAL CLEANOUT
- ITEMS TO BE REMOVED (DEMOLITION)
- FW — COLD FILTERED WATER
- SHOCK ABSORBER

NOTE:

SYMBOLS SHOWN ON THIS PLUMBING LEGEND ARE FOR REFERENCE PURPOSES ONLY. ALL OF THESE SYMBOLS MAY NOT BE USED FOR THIS PROJECT.

SPECIFICATIONS

PART 1 GENERAL

1.1 SECTION INCLUDES

A. GENERAL PROVISIONS SPECIFICALLY APPLICABLE TO DIVISION 15 SECTIONS, IN ADDITION TO DIVISION 1 – GENERAL REQUIREMENTS.

1.2 SCOPE

A. THE WORK SHALL INCLUDE THE PROVISIONS OF SYSTEMS, EQUIPMENT AND MATERIALS SPECIFIED IN THIS DIVISION AND AS CALLED FOR ON THE DRAWINGS. WORK SHALL ALSO INCLUDE SUPERVISION, OPERATION, METHODS AND LABOR FOR THE FABRICATION, START-UP AND TESTS FOR A COMPLETE OPERATIONAL PLUMBING INSTALLATION.

B. DRAWINGS FOR THE WORK ARE DIAGRAMMATIC IN NATURE AND ARE INTENDED TO CONVEY THE SCOPE OF THE INSTALLATION AND TO INDICATE THE GENERAL ARRANGEMENT AND LOCATIONS OF THE WORK. BECAUSE OF THE SCALE OF THE DRAWINGS, CERTAIN BASIC ITEMS SUCH AS PIPE FITTINGS, ACCESS PANELS, AND SLEEVES MAY NOT BE SHOWN. THIS CONTRACTOR SHALL BE RESPONSIBLE FOR SELECTING THE EQUIPMENT TO FIT THE SPACE PROVIDED. THE LOCATION AND SIZES FOR PIPE FITTINGS, SLEEVES, INSERTS, FIRE AND/OR SMOKE DAMPERS, AND OTHER BASIC ITEMS REQUIRED BY CODE AND OTHER SECTIONS SHALL BE COORDINATED AND INCLUDED FOR THE PROPER INSTALLATION OF THE WORK.

C. EQUIPMENT SPECIFICATIONS MAY NOT DEAL INDIVIDUALLY WITH MINUTE ITEMS REQUIRED SUCH AS COMPONENTS, PARTS, CONTROLS AND DEVICES WHICH MAY BE REQUIRED TO PRODUCE THE EQUIPMENT PERFORMANCE SPECIFIED OR AS REQUIRED TO MEET THE EQUIPMENT WARRANTIES. WHERE SUCH ITEMS ARE REQUIRED, THEY SHALL BE INCLUDED BY THE INSTALLER OF THE EQUIPMENT, WHETHER OR NOT SPECIFICALLY INDICATED IN THE CONTRACT DOCUMENTS WITH NO ADDITIONAL COST INCURRED.

D. WHERE NOTED ON THE DRAWINGS OR INDICATED IN OTHER SECTIONS OF THE SPECIFICATION, THE CONTRACTOR FOR THIS DIVISION SHALL INSTALL PLUMBING EQUIPMENT FURNISHED BY OTHERS, AND SHALL MAKE ALL FINAL CONNECTIONS. CONTRACTOR SHALL INSTALL EQUIPMENT AND SYSTEMS IN STRICT ACCORDANCE WITH MANUFACTURERS RECOMMENDATIONS.

E. COORDINATE WITH ALL TRADES IN SUBMITTAL OF SHOP DRAWINGS. TIGHT SPACE CONDITIONS SHALL BE DETAILED TO THE SATISFACTION OF ALL TRADES, SUBJECT TO THE REVIEW AND FINAL ACCEPTANCE OF THE ARCHITECT/ENGINEER. IN THE EVENT THAT THE CONTRACTOR INSTALLS HIS WORK BEFORE COORDINATING WITH OTHER TRADES OR SO AS TO CAUSE ANY INTERFERENCE WITH THE WORK OF THE OTHER TRADES THIS CONTRACTOR SHALL MAKE ALL REQUIRED CHANGES TO CORRECT THE CONDITION AT NO ADDITIONAL COST TO THE PROJECT.

F. EXAMINATION OF BIDDING DOCUMENTS:

1. EACH BIDDER SHALL EXAMINE THE BIDDING DOCUMENTS CAREFULLY AND NOT LATER THAN TEN (10) DAYS PRIOR TO THE DATE FOR RECEIPT OF BIDS, SHALL MAKE WRITTEN REQUEST TO THE ENGINEER FOR INTERPRETATION OR CORRECTION OF ANY AMBIGUITY, INCONSISTENCY OR ERROR THEREIN. ANY INTERPRETATION OR CORRECTION WILL BE ISSUED AS AN ADDENDUM BY THE ENGINEER. ONLY A WRITTEN INTERPRETATION OR CORRECTION TO BID DOCUMENTS BY ADDENDUM SHALL BE BINDING. NO BIDDER SHALL RELY UPON ANY INTERPRETATION OR CORRECTION GIVEN BY ANY OTHER METHOD.

G. FIRE PROTECTION:

THE FIRE PROTECTION CONTRACTOR SHALL PROVIDE ALL MATERIAL, LABOR, TRUCKING, HOISTING, ENGINEERING, SCAFFOLDING, SHOP DRAWINGS, INSURANCE, PERMITS, FEE'S, ETC. NECESSARY FOR THE FURNISHING AND INSTALLATION OF ALL RELATED WORK IN ACCORDANCE WITH THE CONTRACT DRAWINGS.

FIRE PROTECTION CONTRACTOR TO SUBMIT SIGNED AND SEALED DRAWINGS AND HYDRAULIC CALCULATIONS TO THE AUTHORITY HAVING JURISDICTION AS DEFINED IN 61G15 AND NFPA 13, SECTION 14-1.

H. SUBSTITUTIONS

1. EXCEPT AS PROVIDED BELOW, EACH BIDDER REPRESENTS THAT HIS BID IS BASED UPON THE MATERIALS AND EQUIPMENT DESCRIBED IN THE BIDDING DOCUMENTS.
2. NO SUBSTITUTIONS FOR OTHER MATERIALS AND EQUIPMENT WILL BE CONSIDERED UNLESS WRITTEN REQUEST HAS BEEN SUBMITTED TO THE ENGINEER FOR APPROVAL AT LEAST TEN (10) DAYS PRIOR TO THE DATE FOR RECEIPT OF BIDS. EACH SUCH REQUEST SHALL INCLUDE A COMPLETE DESCRIPTION OF THE PROPOSED SUBSTITUTE, THE NAME OF THE MATERIAL OR EQUIPMENT FOR WHICH IT IS TO BE SUBSTITUTED, DRAWINGS, CUTS, PERFORMANCE AND TEST DATA OR INFORMATION NECESSARY FOR A COMPLETE EVALUATION.
3. IF THE ENGINEER APPROVES ANY PROPOSED SUBSTITUTION, SUCH APPROVAL WILL BE ISSUED AS AN ADDENDUM FORWARDED TO ALL PARTICIPATING BIDDERS.
4. IF ANY BIDDER IS UNABLE TO PROCURE WRITTEN APPROVAL OF ANY SUBSTITUTION FROM THE ENGINEER PRIOR TO THE OPENING OF BIDS, THEN HE SHALL BASE HIS BID ON ITEMS AND SYSTEMS AS SPECIFIED IN BID DOCUMENTS.
5. SUBSTITUTIONS REQUESTED ON THE BID PROPOSAL FORM WHICH ARE PRIOR APPROVED BY THE ENGINEER WILL BE INCORPORATED INTO THE CONTRACT WITH THE SUCCESSFUL BIDDER.
6. REQUESTS FOR ANY SUBSTITUTIONS NOT SUBMITTED AND APPROVED IN ACCORDANCE WITH THE ABOVE INSTRUCTIONS WILL BE DENIED BY THE ENGINEER.

1.3 REGULATORY REQUIREMENTS

A. ALL INSTALLATIONS AND EQUIPMENT SHALL BE IN STRICT ACCORDANCE WITH ALL APPLICABLE STATUTES, CODES AND REGULATIONS OF THE GOVERNMENTAL BODIES HAVING JURISDICTION.
B. CONFORM TO 2014 FLORIDA BUILDING CODE.
C. CONFORM TO 2014 FLORIDA PLUMBING CODE.
D. CONFORM TO 2014 FLORIDA FIRE PREVENTION CODE, 5TH EDITION

1.4 CUTTING AND PATCHING

A. SUBMIT WRITTEN REQUEST IN ADVANCE OF CUTTING OR ALTERING ELEMENTS.
B. EMPLOY SKILLED AND EXPERIENCED INSTALLER TO PERFORM CUTTING AND PATCHING WHICH EFFECT:

1. STRUCTURAL INTEGRITY OF ELEMENT.
2. INTEGRITY OF WEATHER.
3. EFFICIENCY, MAINTENANCE, OR SAFETY OF ELEMENT.
4. VISUAL QUALITIES OF SIGHT.
5. WORK OF OWNER OR SEPERATE CONTRACTOR.

PART 2 PRODUCTS

2.1 PIPE HANGERS AND SUPPORTS

A. MANUFACTURERS:
1. B-LINE.
2. OTHER ACCEPTABLE MANUFACTURERS OFFERING EQUIVALENT PRODUCTS.
A) MICHIGAN HANGER.
B) PHD.

2.2 PIPING INSULATION: HOT WATER, HOT WATER RETURN, STORM PIPING

A. MANUFACTURERS:
1. OWENS-CORNING
2. JOHNS-MANVILLE
3. KNAUF
B. ASTM C547, RIGID MOLDED NON-COMBUSTIBLE FIBERGLASS INSULATION. 'K' VALUE .024 @ 75 DEGREES F.
C. VAPOR BARRIER JACKET, KRAFT PAPER WITH GLASS FIBER YARN AND BONDED TO ALUMINUM FILM. CLOSURE SYSTEM SHALL BE UL 181.
D. INSULATION THICKNESS 1-1/2"

2.3 PIPING: DRAINAGE WASTE, VENT, CONDENSATE AND STORM PIPING

A. PVC: ASTM D2665 SCHEDULE 40 PVC PIPING.
1. FITTINGS: ASTM D2665 SCHEDULE 40 PVC DWV FITTINGS.
2. JOINTS: ASTM D2564 SOLVENT CEMENT. JOINTS SHALL BE INSTALLED IN ACCORDANCE WITH ASTM D2855.

2.4 PIPING: WATER PIPING

A. CPVC PIPING & FITTINGS: ASTM D1784 PIPE COMPOUND CELL CLASS 24448.
1. JOINTS: ASTM F493 SOCKET TYPE WITH SOLVENT CEMENT ASTM F402 NSF INTERNATIONAL APPROVED MFG. COMPATIBLE.
2. FLOWGUARD GOLD CPVC PIPE AS MFG. BY NOVEON INC. OR SPEARS EVERTUFF CPVC CTS PLUMBING SYSTEM.

PART 3 INSTALLATION

A. INSTALL IN STRICT ACCORDANCE WITH MANUFACTURER'S INSTRUCTIONS.
B. PROVIDE NON-CONDUCTING DIELECTRIC CONNECTIONS WHEREVER JOINTING DISSIMILAR METALS.
C. ROUTE PIPING IN ORDERLY MANNER AND MAINTAIN GRADIENT.
D. INSTALL PIPING TO CONSERVE BUILDING SPACE AND NOT INTERFERE WITH USE OF SPACE.
E. GROUP PIPING WHENEVER PRACTICAL AT COMMON ELEVATIONS.
F. INSTALL PIPING TO ALLOW FOR EXPANSION AND CONTRACTION WITHOUT STRESSING PIPE, JOINTS, OR CONNECTED EQUIPMENT.
G. PROVIDE CLEARANCE FOR INSTALLATION OF INSULATION AND ACCESS TO VALVES AND FITTINGS.
H. PROVIDE ACCESS WHERE VALVES AND FITTINGS ARE NOT EXPOSED. COORDINATE SIZE AND LOCATION OF ACCESS DOORS WITH APPROPRIATE ARCHITECTURAL SECTION.
I. ESTABLISH ELEVATIONS OF BURIED PIPING OUTSIDE THE BUILDING TO ENSURE PROPER SLOPE AND COVER.
J. ESTABLISH ELEVATIONS OF EXISTING BURIED PIPING FOR CONNECTION TO NEW WORK TO ENSURE PROPER SLOPE AND COVER.
K. WHERE PIPE SUPPORT MEMBERS ARE WELDED TO STRUCTURAL BUILDING FRAMING, SCRAPE, BRUSH CLEAN, AND APPLY ONE COAT OF ZINC RICH PRIMER TO WELDING.
L. INSTALL WATER HAMMER SHOCK ARRESTORS AT EACH FIXTURE OR BATTERY OF FIXTURES WHERE REQUIRED. ARRESTORS SHALL BE FACTORY FABRICATED. INSTALL ARRESTORS AND SIZE PER PLUMBING AND DRAINAGE INSTITUTE STANDARD P.D.I. WH-201. ACCEPTABLE MANUFACTURERS ZURN, JOSAM, SIOUX CHIEF. PPP INC. FOR 1-11 FU'S PROVIDE PDI-A, FOR 12-32 FU'S PDI-B, 33-60 FU'S PDI-C, 61-113 FU'S PDI-D.

GENERAL NOTES

1. CONTRACTOR SHALL BE RESPONSIBLE FOR PROVIDING ALL NECESSARY FITTINGS AS REQUIRED BY ALL APPLICABLE CODES AND GOVERNING AUTHORITIES.
2. CONTRACTOR SHALL VERIFY AND CORRECT AS REQUIRED TO MEET ALL CODES AND REGULATIONS ANY POSSIBLE DISCREPANCIES BETWEEN TYPE AND SIZE OF CONNECTION SPECIFIED IN PLUMBING FIXTURE SCHEDULE AND FIXTURES ACTUALLY INSTALLED ON THE SITE.
3. ALL DRAINAGE PIPING 3" AND LARGER SHALL HAVE AN 1/8" PER FOOT SLOPE. ALL DRAINAGE PIPING 2-1/2" AND LESS SHALL HAVE A 1/4" PER FOOT SLOPE.
4. PROVIDE ACCESS PANELS FOR ALL VALVES LACATED WITHIN NON ACCESSIBLE CEILING AND WALLS. PROVIDE FIRE RATED PANEL IN RATED WALLS.
5. VALVES AND FITTINGS SHALL BE OF SAME SIZE OF LINE ON WHICH THEY ARE LOCATED, UNLESS OTHERWISE INDICATED ON DRAWINGS.
6. CONTRACTOR SHALL COORDINATE ALL WORK WITH OTHER TRADES.
7. CONTRACTOR SHALL FIELD VERIFY ALL GIVEN MEASUREMENTS PRIOR TO LAYING AND CONNECTING ALL SANITARY AND WASTE PIPING AND NOTIFY ARCHITECT OF ANY DISCREPANCIES.
8. AIR CHAMBERS SHALL NOT BE CONSIDERED AN EQUAL TO WATER ARRESTORS AS SPECIFIED.
9. CONTRACTOR SHALL BE RESPONSIBLE FOR MAINTAINING FIRE RATING AND WEATHERPROOFING INTEGRITY OF ALL PIPING AND PENETRATIONS.
10. ALL WATER SUPPLY AND SANITARY LINES SHALL BE RUN AS CLOSE TO PLANS AS POSSIBLE WITH NO CHANGES IN SIZING. PROVIDE FIRE RATED PANELS/BOXES FOR ALL PLUMBING DEVICES LOCATED IN RATED WALLS.
11. CONTRACTOR SHALL BE RESPONSIBLE FOR PROVIDING ALL NECESSARY SUPPORTING DEVICES FOR ALL FIXTURES INCLUDED IN CONTRACT OR HEREIN SPECIFIED OR OTHERWISE.
12. INSULATE ALL HOT WATER AND HOT WATER RETURN PIPING.
13. ALL DRAINAGE PIPING SHALL BE MARKED WITH THE SEAL OF APPROVAL OF THE NATIONAL SANITATION FOUNDATION.
14. DO NOT PENETRATE FOUNDATIONS WITH PIPING, COORDINATE WITH GENERAL CONTRACTOR TO DROP FOUNDATIONS AS REQUIRED TO CLEAR PLUMBING SERVICES WHERE ABSOLUTELY NECESSARY. ALL PIPING PENETRATING A BEARING WALL OR FOOTING MUST BE SLEEVED AND LOCATION APPROVED BY STRUCTURAL ENGINEER.
15. ROUTE ALL PIPING CONCEALED ABOVE CEILINGS, WITHIN WALLS, OR IN CHASES. PIPING EXPOSED SHALL BE SLOPED AND PAINTED TO MATCH ARCHITECTURAL FINISHES. PIPING IN MECHANICAL ROOMS MAY BE EXPOSED.
16. PROVIDE ACCESS PANELS TO ALL VALVES WITHIN CHASES OR ABOVE NON-ACCESSIBLE CEILINGS. REFER TO ARCHITECTURAL DRAWINGS FOR CEILING TYPES.
17. SEE ARCHITECTURAL DRAWINGS FOR EXACT LOCATIONS OF PLUMBING FIXTURE MOUNTING HEIGHTS, AND DIMENSIONS.
18. CONTRACTOR SHALL VERIFY INVERT ELEVATIONS OF SEWERS TO WHICH NEW SEWER LINES ARE TO BE CONNECTED BEFORE INSTALLATION OF NEW SEWER LINE.
19. ALL VENTS THROUGH ROOF SHALL BE MIN. 10'-0" FROM ANY AIR INTAKES.
20. CONTRACTOR SHALL INSTALL DIELECTRIC UNIONS AT CONNECTIONS OF DISSIMILAR METALS.
21. CONTRACTOR SHALL SUBMIT SHOP DRAWINGS (INCLUDING PIPE ROUTING AND EQUIPMENT LOCATIONS) TO ARCHITECT/ENGINEER FOR REVIEW AND APPROVAL PRIOR TO THE INSTALLATION OR PURCHASING OF ANY PIPING AND/OR EQUIPMENT.
22. ALL WATER PIPING INSTALLED IN EXTERIOR WALLS SHALL BE PLACED ON THE INTERIOR SIDE OF THE WALL, SO THAT WALL INSULATION CAN BE PLACED ON THE EXTERIOR SIDE OF THE PIPING.
23. IT IS THE PLUMBING CONTRACTORS RESPONSIBILITY TO PROVIDE A REDUCED PRESSURE BACKFLOW PREVENTION DEVICE ON THE MAIN DOMESTIC WATER SERVICE PROVIDED TO THE BUILDING/SPACE UNDER CONSTRUCTION AS PER THE LATEST ADOPTED VERSION OF THE PLUMBING CODE.
24. ALL PLUMBING SYSTEMS SHALL BE INSTALLED AS CLOSE AS POSSIBLE TO THE PERMITTED PLUMBING PLANS. ANY DEVIATION IN DESIGN AND ROUTING SHALL BE SUBMITTED TO THE ENGINEER FOR APPROVAL PRIOR TO INSTALLATION OF ANY WORK. THIS INCLUDES ANY REDESIGNS, VALUE ENGINEERING ITEMS AND ROUTING METHODS NEGOTIATED IN THE BIDDING PROCESS WITH THE GC IN ORDER TO OBTAIN THE LOWEST BID.
25. DOMESTIC WATER PIPING IS NOT PERMITTED BELOW THE BUILDING SLAB WITH THE EXCEPTION OF THE FEW FEET REQUIRED TO ENTER THE BUILDING CHASE WALL.
26. PLUMBING CONTRACTOR SHALL COMPLY WITH THE FBC CHAPTER 23 REGARDING STUD OPENINGS FOR ALL PIPE ROUTING, IN NO CASE SHALL MAX. OPENING FALL WITHIN 8" FROM EITHER SIDE OF STUD WITHOUT THE APPROVAL OF THE STRUCTURAL ENGINEER, IE: 3½" NON BEARING STUD, 2½" MAX. OPENING – 5½" NON-BEARING STUD, 4½" MAX. OPENING.
27. 3" PIPE NOT PERMITTED TO PENETRATE 3" STUDS WITHOUT ADITIONAL REINFORCEMENT AND APPROVAL FROM THE STRUCTURAL ENGINEER. 5½" STUDS ARE APPROVED FOR 2" & 3" PIPE UP TO 4½" MAX. OPENING WITHOUT ADDITIONAL REINFORCEMENT.

PERMIT REVIEW STAMP

ISSUE HISTORY

No.	Date	Description
1	10/06/2017	COORDINATION SET
2	11/10/2017	75%-90% REVIEW COORD. SET

REVISION HISTORY

No.	Date	Description

© 2015 These documents and their contents are the property of FUGLEBERG KOCH, P.L.C. +ADD001.00 and are issued only for the specific project noted on these drawings. Any reproductions, revisions, or modifications of these documents without the expressed written consent of Fugleberg Koch, P.L.C. is prohibited by law.

FUGLEBERG KOCH

2555 Temple Trail, Winter Park, FL 32789 (407) 629-0595
www.fuglebergkoch.com BR569

CONSULTANT

Joseph, Lawrence & Co
Consulting Engineers
1180 HARWOOD AVE. SUITE 3000
ALTAMONTE SPRINGS, FLORIDA 32714
TEL: 321.972.4466
WWW.JLCENG.COM
CA NO. 28730

JLC 17.0137.00

Adam Joseph Barney
P.E. #:69124

SUMMER BAY APTS. II
LAKE COUNTY, FL

Drawn:	MJR/KCM
Checked:	BLS/AJB
Approval:	BLS/AJB
Date:	11/10/2017
Project #:	5389

SYMBOL LEGEND & NOTES PLUMBING

P0.01

REFERENCE NOTES: ⓧ

1. TERMINATE TPV PIPING ABOVE GRADE AT EXTERIOR OF BUILDING, SEE DETAIL.
2. TERMINATE CONDENSATE ABOVE GRADE AT EXTERIOR OF BUILDING, SEE DETAIL.
3. SUMP PUMP SP-1, SEE SCHEDULE AND DETAIL.
4. TERMINATE SUMP PUMP DISCHARGE ABOVE GROUND AT EXTERIOR OF BUILDING.
5. 1½" WATER HEATER PAN DRAIN DOWN.
6. 1½" CONDENSATE DRAIN DOWN.
7. 1¼" CW UP.
8. 4" SAN. DOWN.

GENERAL NOTES

1. PROVIDE CLEAN OUTS AS REQUIRED BY CODE AND AHJ. PROVIDE CLEAN OUTS AT THE BASE OF SANITARY STACKS & CONDENSATE DRAIN RISERS MINIMUM 24" ABOVE FLOOR.
2. SEE SHEETS P6.01 & P6.02 FOR RISER DIAGRAMS.

PLUMBING FIXTURE UNIT CALCULATION

* BASED ON 2014 FLORIDA BUILDING CODE – PLUMBING

TYPE OF SERVICE	WATER	SANITARY
FIXTURE UNIT COUNT TOTAL	457	543
TOTAL GALLONS PER MINUTE	116	N/A
SIZE OF SERVICE CONNECTION	3"	6"

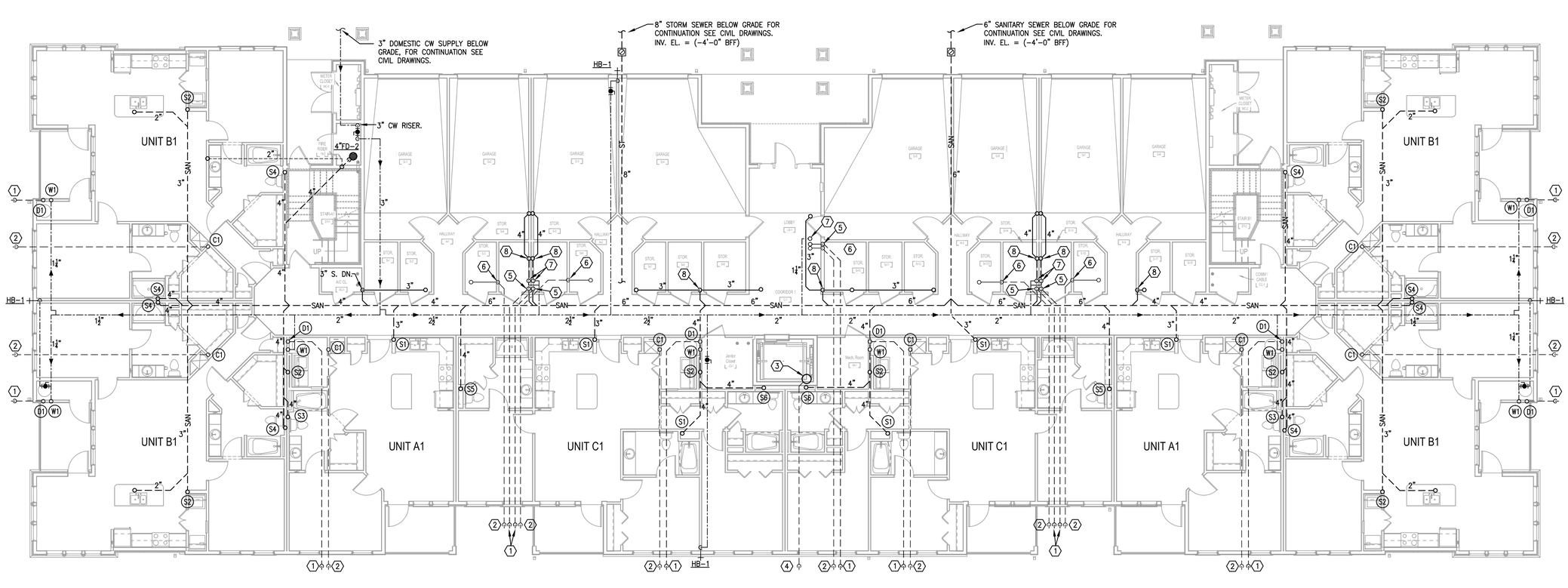

H1 BUILDING TYPE 1 - GROUND LEVEL - PLUMBING
1/8" = 1'-0"

PERMIT REVIEW STAMP

ISSUE HISTORY

No.	Date	Description
1	10/06/2017	COORDINATION SET
2	11/10/2017	75%-90% REVIEW COORD. SET

REVISION HISTORY

No.	Date	Description

© 2015 These documents and the ideas incorporated herein, as an instrument of service, are the property of FUGLEBERG KOCH, P.L.C. and are loaned only for the specific project noted on these drawings. Any reproductions, revisions, or modifications of these documents without the expressed written consent of Fugleberg Koch, P.L.C. is prohibited by law.

FUGLEBERG KOCH
2555 Temple Trail, Winter Park, FL 32789 (407) 629-0595
www.fuglebergkoch.com BR569

CONSULTANT
Joseph, Lawrence & Co
Consulting Engineers
1180 HARWOOD AVE. SUITE 3000
ALTAMONTE SPRINGS, FLORIDA 32714
TEL: 321.972.4466
WWW.JLCENG.COM
CA NO. 28730

JLC 17.0137.00

Adam Joseph Barney
P.E. #:69124

Drawn:	MJR/KCM
Checked:	BLS/AJB
Approval:	BLS/AJB
Date:	11/10/2017
Project #:	5389

SUMMER BAY APTS. II
LAKE COUNTY, FL

BUILDING TYPE 1 - GROUND FLOOR PLAN - PLUMBING

P2.01

GENERAL NOTES

1. SEE SHEETS P6.01 AND P6.02 FOR RISER DIAGRAMS.

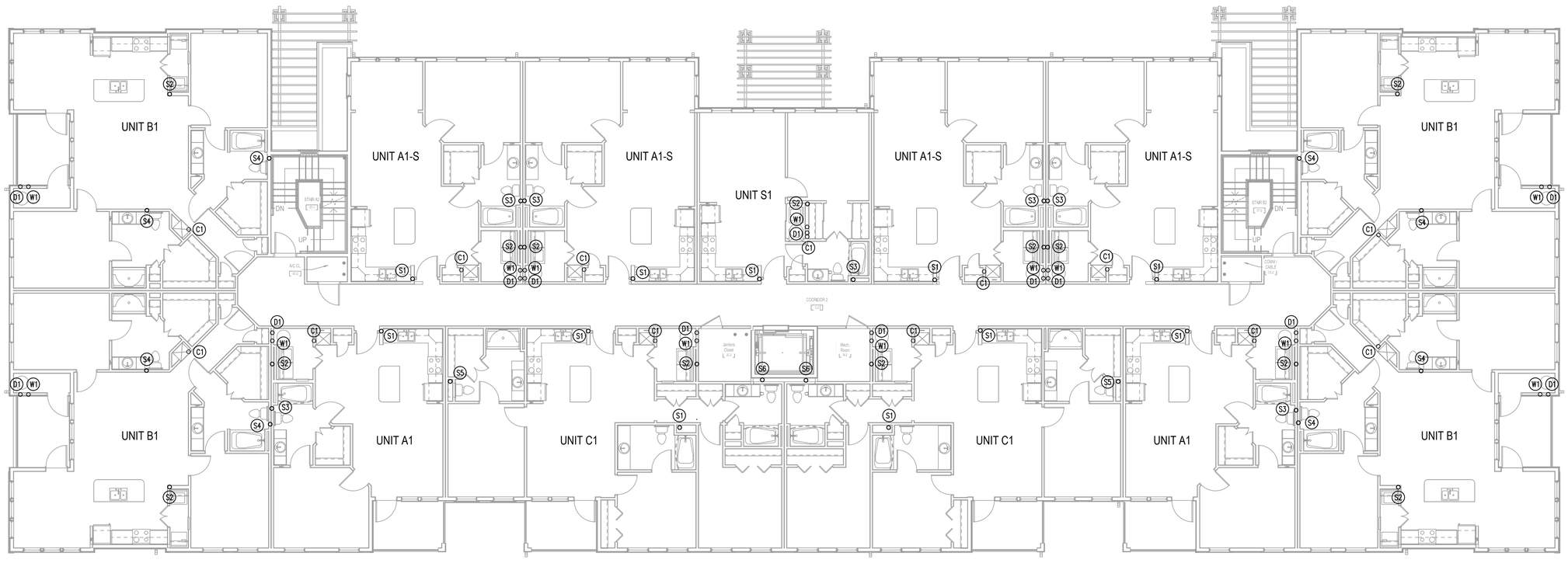

H1 BUILDING TYPE 1 - LEVEL 2 - PLUMBING
1/8" = 1'-0"

PERMIT REVIEW STAMP

ISSUE HISTORY

No.	Date	Description
1	10/06/2017	COORDINATION SET
2	11/10/2017	75%-90% REVIEW COORD. SET

REVISION HISTORY

No.	Date	Description

FUGLEBERG KOCH
2555 Temple Trail, Winter Park, FL 32789 (407) 629-0595
www.fuglebergkoch.com BR569

CONSULTANT
Joseph, Lawrence & Co
Consulting Engineers
1180 HARWOOD AVE. SUITE 3000
ALTAMONTE SPRINGS, FLORIDA 32714
TEL: 321.972.4466
WWW.JLCENG.COM
CA NO. 28730

JLC 17.0137.00

Adam Joseph Barney
P.E. #:69124

SUMMER BAY APTS. II
LAKE COUNTY, FL

Drawn:	MJR/KCM
Checked:	BLS/AJB
Approval:	BLS/AJB
Date:	11/10/2017
Project #:	5389

BUILDING TYPE 1 - LEVEL 2
PLAN - PLUMBING

P2.02

© 2015 These documents and their contents are the property of FUGLEBERG KOCH, PLLC - AA26002103, and are issued only for the specific project noted on these drawings. Any reproductions, revisions, or modifications of these documents without the expressed written consent of Fugleberg Koch, PLLC is prohibited by law.

GENERAL NOTES

1. SEE SHEETS P6.01 AND P6.02 FOR RISER DIAGRAMS.

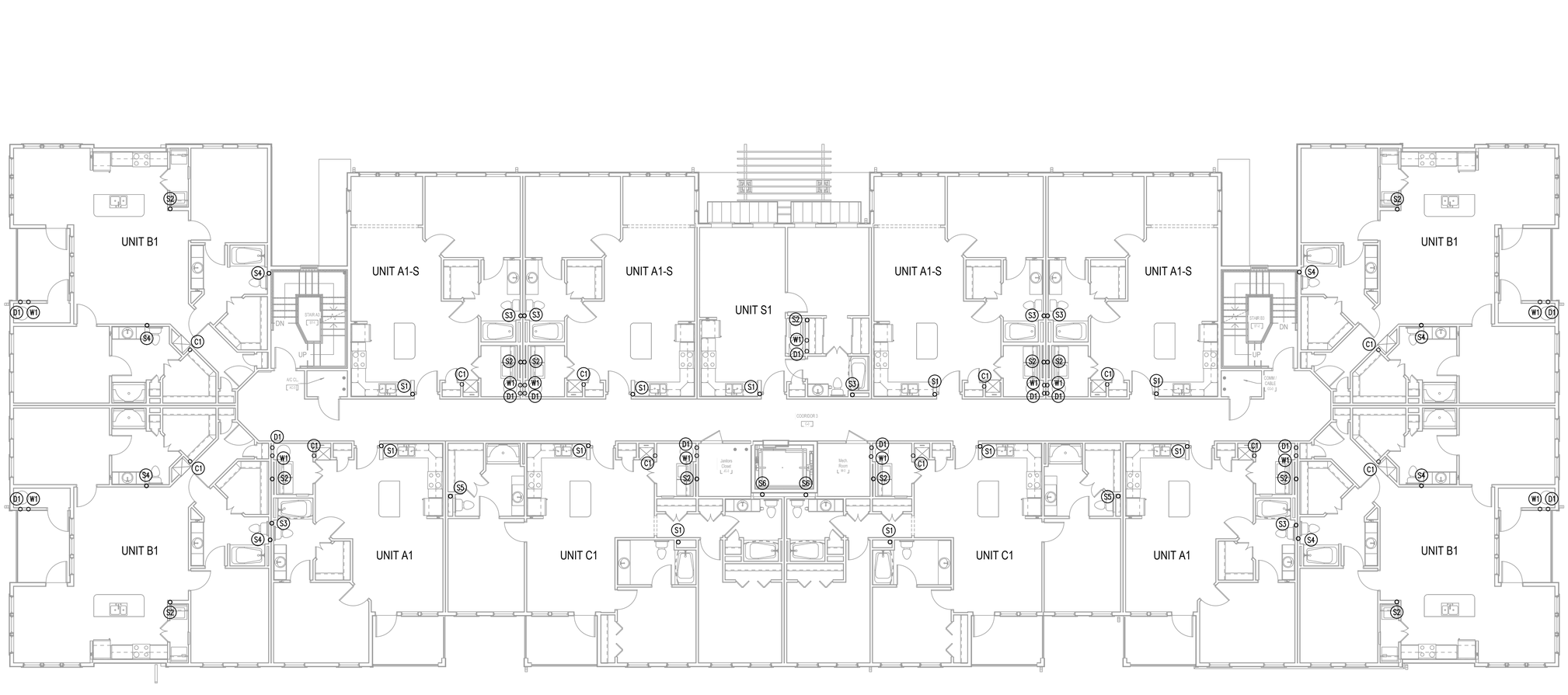

H1 BUILDING TYPE 1 - LEVEL 3 - PLUMBING
1/8" = 1'-0"

PERMIT REVIEW STAMP

ISSUE HISTORY

No.	Date	Description
1	10/06/2017	COORDINATION SET
2	11/10/2017	75%-90% REVIEW COORD. SET

REVISION HISTORY

No.	Date	Description

© 2015 These drawings and their contents are the property of FUGLEBERG KOCH, P.L.C. • ARCHITECTS and are issued only for the specific project noted on these drawings. Any reproductions, revisions, or modifications of these documents without the expressed written consent of Fugleberg Koch, P.L.C. is prohibited by law.

FUGLEBERG KOCH
2555 Temple Trail, Winter Park, FL 32789 (407) 629-0595
www.fuglebergkoch.com BR569

CONSULTANT
Joseph, Lawrence & Co
Consulting Engineers
1180 HARWOOD AVE. SUITE 3000
ALTAMONTE SPRINGS, FLORIDA 32714
TEL: 321.972.4466
WWW.JLCENG.COM
CA NO. 28730

JLC 17.0137.00

Adam Joseph Barney
P.E. #:69124

SUMMER BAY APTS. II
LAKE COUNTY, FL

Drawn:	MJR/KCM
Checked:	BLS/AJB
Approval:	BLS/AJB
Date:	11/10/2017
Project #:	5389

BUILDING TYPE 1 - LEVEL 3
PLAN - PLUMBING

P2.03

GENERAL NOTES

1. SEE SHEETS P6.01 AND P6.02 FOR RISER DIAGRAMS.

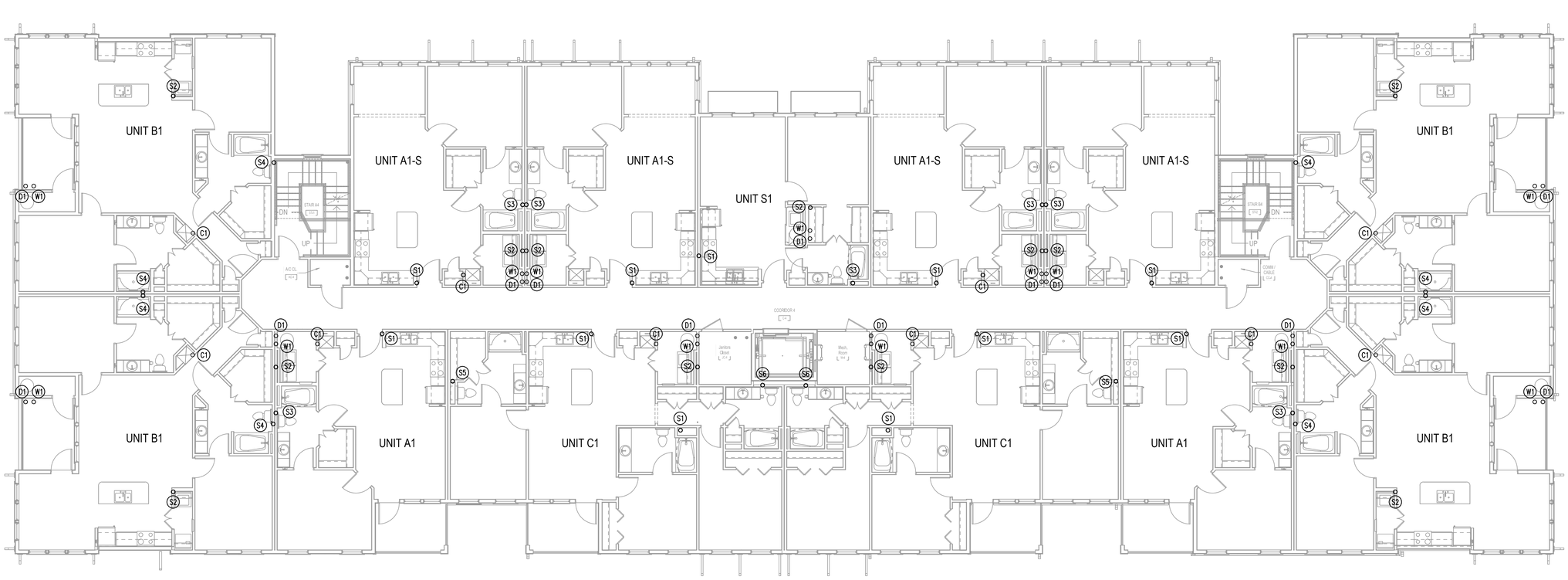

H1 BUILDING TYPE 1 - LEVEL 4 - PLUMBING
1/8" = 1'-0"

PERMIT REVIEW STAMP

ISSUE HISTORY

No.	Date	Description
1	10/06/2017	COORDINATION SET
2	11/10/2017	75%-90% REVIEW COORD. SET

REVISION HISTORY

No.	Date	Description

FUGLEBERG KOCH
2555 Temple Trail, Winter Park, FL 32789 (407) 629-0595
www.fuglebergkoch.com BR569

CONSULTANT
Joseph, Lawrence & Co
Consulting Engineers
1180 HARWOOD AVE. SUITE 3000
ALTAMONTE SPRINGS, FLORIDA 32714
TEL: 321.972.4466
WWW.JLCENG.COM
CA NO. 28730

JLC 17.0137.00

Adam Joseph Barney
P.E. #:69124

SUMMER BAY APTS. II
LAKE COUNTY, FL

Drawn:	MJR/KCM
Checked:	BLS/AJB
Approval:	BLS/AJB
Date:	11/10/2017
Project #:	5389

BUILDING TYPE 1 - LEVEL 4
PLAN - PLUMBING

P2.04

© 2015 These documents and their contents are the property of FUGLEBERG KOCH, PLLC - AA26002103, and are issued only for the specific project noted on these drawings. Any reproductions, revisions, or modifications of these documents without the expressed written consent of Fugleberg Koch, PLLC is prohibited by law.

H1 BUILDING TYPE 1 - ROOF - PLUMBING
1/8" = 1'-0"

PERMIT REVIEW STAMP

ISSUE HISTORY

No.	Date	Description
1	10/06/2017	COORDINATION SET
2	11/10/2017	75%-90% REVIEW COORD. SET

REVISION HISTORY

No.	Date	Description

© 2015 These documents and their contents are the property of FUGLEBERG KOCH, P.L.C. • AA0002123 and are issued only for the specific project noted on these drawings. Any reproductions, revisions, or modifications of these documents without the expressed written consent of Fugleberg Koch, P.L.C. is prohibited by law.

FUGLEBERG KOCH
2555 Temple Trail, Winter Park, FL 32789 (407) 629-0595
www. fuglebergkoch.com BR569

CONSULTANT

Joseph, Lawrence & Co
Consulting Engineers
1180 HARWOOD AVE. SUITE 3000
ALTAMONTE SPRINGS, FLORIDA 32714
TEL: 321.972.4466
WWW.JLCENG.COM
CA NO. 28730

JLC 17.0137.00

Adam Joseph Barney
P.E. #:69124

SUMMER BAY APTS. II
LAKE COUNTY, FL

Drawn:	MJR/KCM
Checked:	BLS/AJB
Approval:	BLS/AJB
Date:	11/10/2017
Project #:	5389

BUILDING TYPE 1 - ROOF - PLUMBING

P2.05

REFERENCE NOTES: ⓧ

1. TERMINATE TPV PIPING ABOVE GRADE AT EXTERIOR OF BUILDING, SEE DETAIL.
2. TERMINATE CONDENSATE ABOVE GRADE AT EXTERIOR OF BUILDING, SEE DETAIL.
3. SUMP PUMP SP-1, SEE SCHEDULE AND DETAIL.
4. TERMINATE SUMP PUMP DISCHARGE ABOVE GROUND AT EXTERIOR OF BUILDING.
5. 1¼" WATER HEATER PAN DRAIN DOWN.
6. 1¼" CONDENSATE DRAIN DOWN.
7. 1¼" CW UP.
8. 4" SAN. DOWN.

GENERAL NOTES

1. PROVIDE CLEAN OUTS AS REQUIRED BY CODE AND AHJ. PROVIDE CLEAN OUTS AT THE BASE OF SANITARY STACKS & CONDENSATE DRAIN RISERS MINIMUM 24" ABOVE FLOOR.
2. SEE SHEETS P6.01 & P6.02 FOR RISER DIAGRAMS.

PLUMBING FIXTURE UNIT CALCULATION

* BASED ON 2014 FLORIDA BUILDING CODE – PLUMBING

TYPE OF SERVICE	WATER	SANITARY
FIXTURE UNIT COUNT TOTAL	444	531
TOTAL GALLONS PER MINUTE	113	N/A
SIZE OF SERVICE CONNECTION	3"	6"

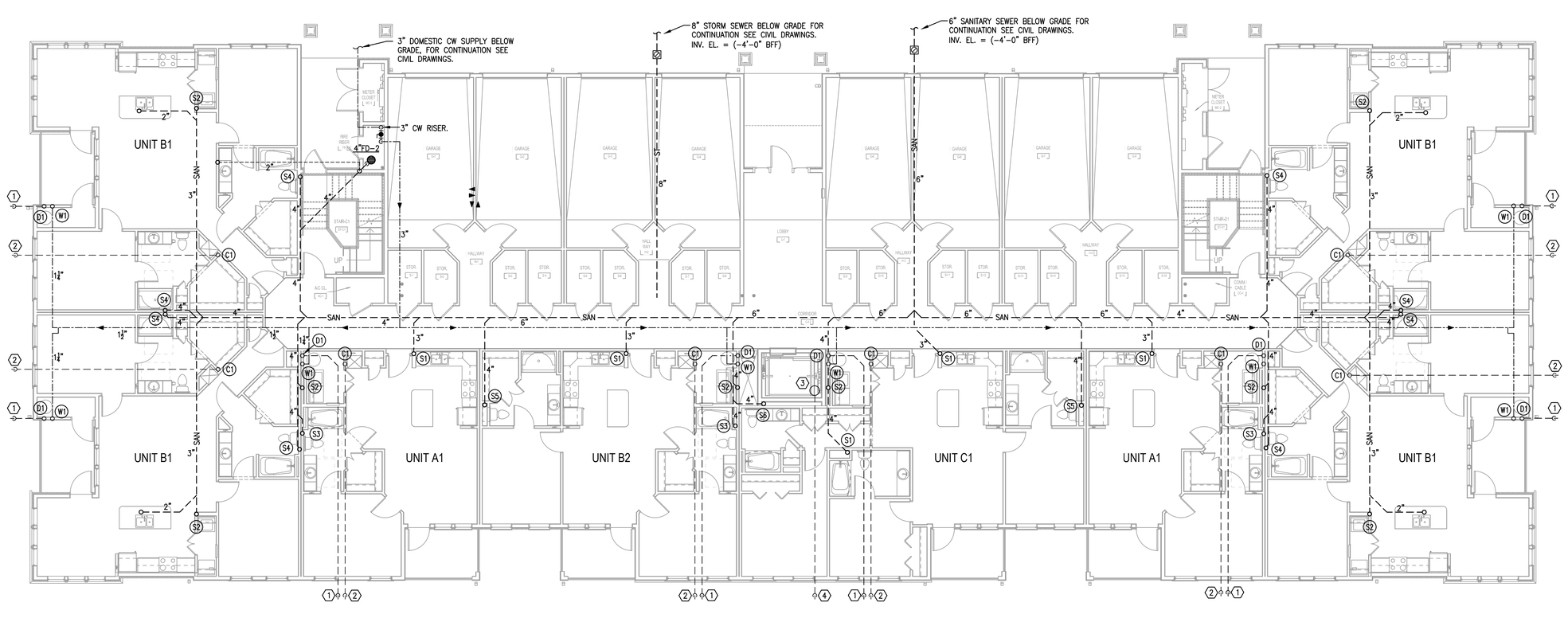

H1 BUILDING TYPE 2 - GROUND LEVEL - PLUMBING
1/8" = 1'-0"

PERMIT REVIEW STAMP

ISSUE HISTORY

No.	Date	Description
1	10/06/2017	COORDINATION SET
2	11/10/2017	75%-90% REVIEW COORD. SET

REVISION HISTORY

No.	Date	Description

© 2015 These documents and the ideas and designs incorporated herein, as an instrument of service, are the property of FUGLEBERG KOCH, P.L.C. • ADS00103 and are treated as for the specific project noted on these drawings. Any reproductions, revisions, or modifications of these documents without the expressed written consent of Fugleberg Koch, P.L.C. is prohibited by law.

FUGLEBERG KOCH
2555 Temple Trail, Winter Park, FL 32789 (407) 629-0595
www.fuglebergkoch.com BR569

CONSULTANT
Joseph, Lawrence & Co
Consulting Engineers
1180 HARWOOD AVE. SUITE 3000
ALTAMONTE SPRINGS, FLORIDA 32714
TEL: 321.972.4466
WWW.JLCENG.COM
CA NO. 28730

JLC 17.0137.00

Adam Joseph Barney
P.E. #:69124

SUMMER BAY APTS. II
LAKE COUNTY, FL

Drawn:	MJR/KCM
Checked:	BLS/AJB
Approval:	BLS/AJB
Date:	11/10/2017
Project #:	5389

BUILDING TYPE 2 - GROUND FLOOR PLAN - PLUMBING

P3.01

GENERAL NOTES

1. SEE SHEETS P6.01 AND P6.02 FOR RISER DIAGRAMS.

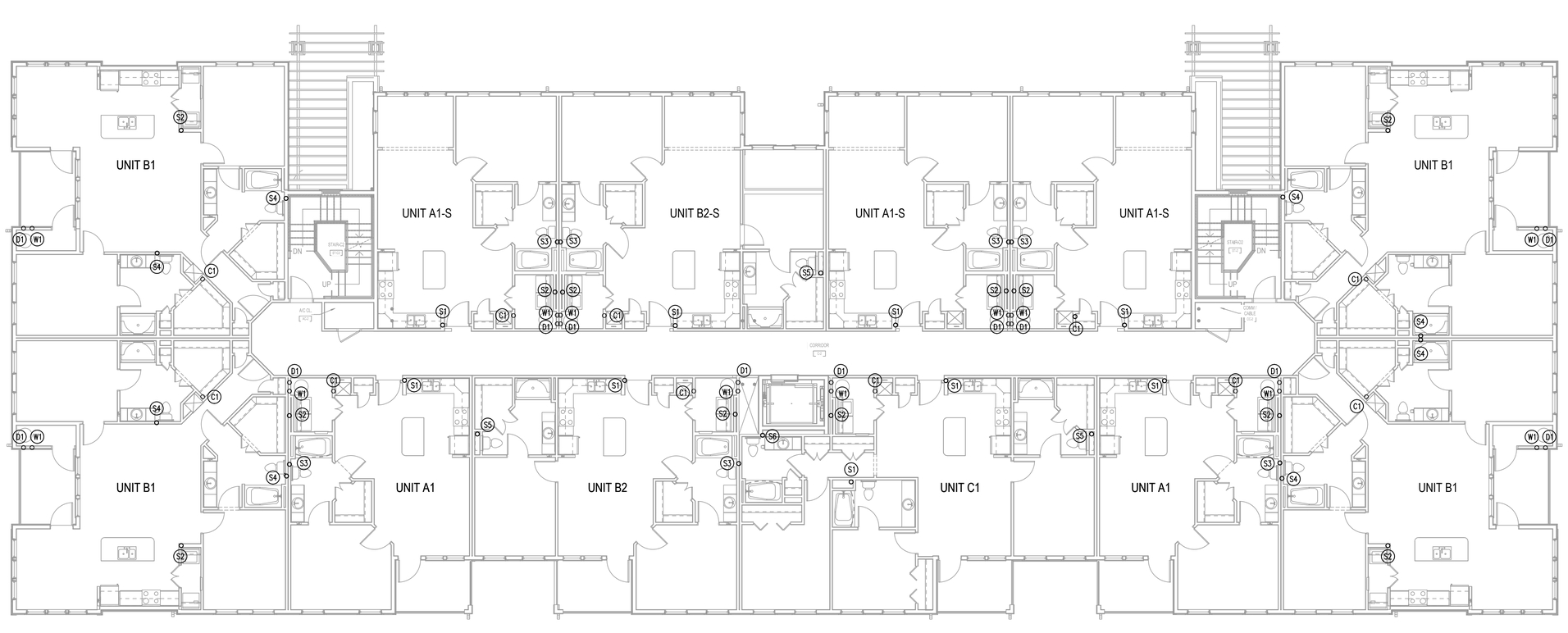

H1 BUILDING TYPE 2 - LEVEL 2 - PLUMBING
1/8" = 1'-0"

PERMIT REVIEW STAMP

ISSUE HISTORY

No.	Date	Description
1	10/06/2017	COORDINATION SET
2	11/10/2017	75%-90% REVIEW COORD. SET

REVISION HISTORY

No.	Date	Description

© 2015 These documents and their contents are the property of FUGLEBERG KOCH, P.L.C. • AA0002123 and are issued only for the specific project noted on these drawings. Any reproductions, revisions, or modifications of these documents without the expressed written consent of Fugleberg Koch, P.L.C. is prohibited by law.

FUGLEBERG KOCH
2555 Temple Trail, Winter Park, FL 32789 (407) 629-0595
www.fuglebergkoch.com BR569

CONSULTANT
Joseph, Lawrence & Co
Consulting Engineers
1180 HARWOOD AVE. SUITE 3000
ALTAMONTE SPRINGS, FLORIDA 32714
TEL: 321.972.4466
WWW.JLCENG.COM
CA NO. 28730

JLC 17.0137.00

Adam Joseph Barney
P.E. #:69124

SUMMER BAY APTS. II
LAKE COUNTY, FL

Drawn:	MJR/KCM
Checked:	BLS/AJB
Approval:	BLS/AJB
Date:	11/10/2017
Project #:	5389

BUILDING TYPE 2 - LEVEL 2 PLAN - PLUMBING

P3.02

GENERAL NOTES

1. SEE SHEETS P6.01 AND P6.02 FOR RISER DIAGRAMS.

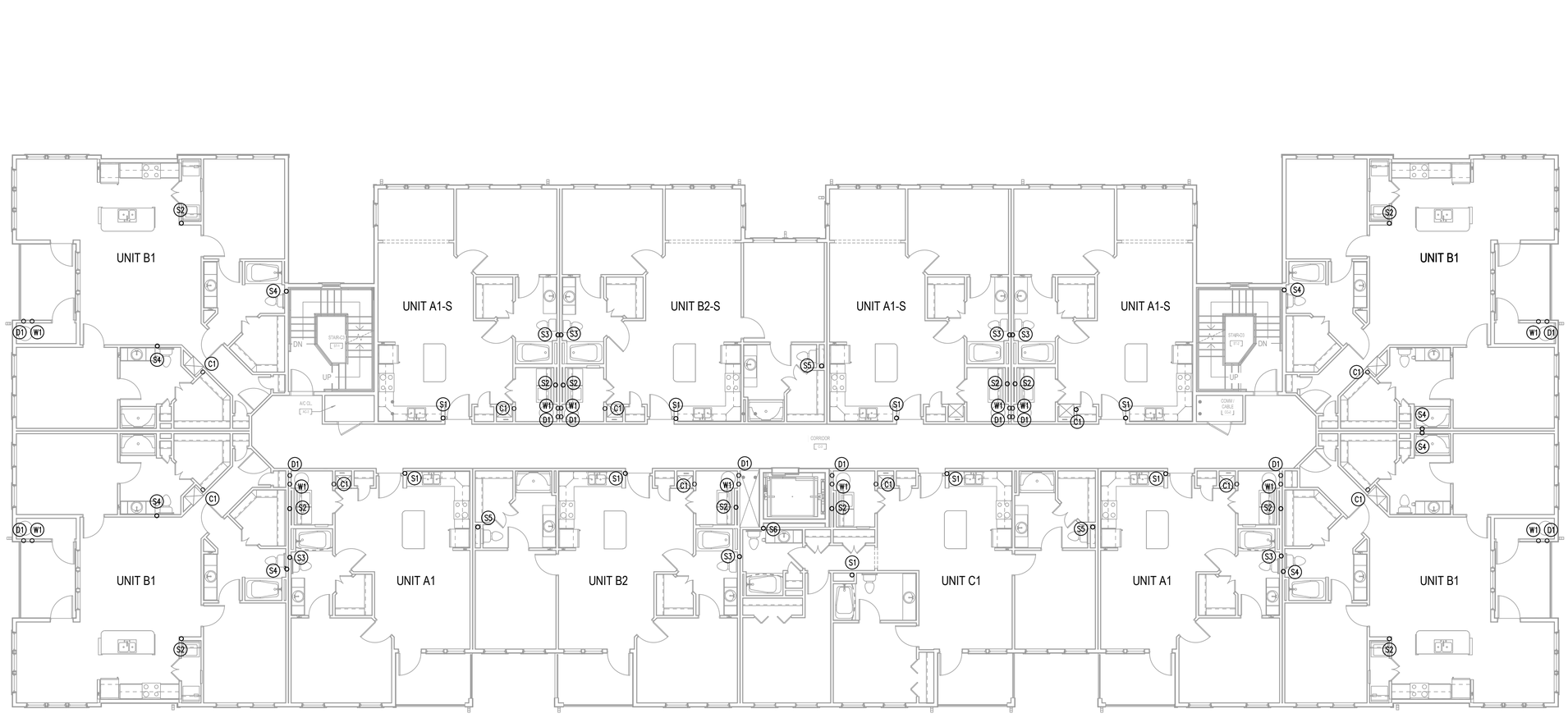

H1 BUILDING TYPE 2 - LEVEL 3 - PLUMBING
1/8" = 1'-0"

PERMIT REVIEW STAMP

ISSUE HISTORY

No.	Date	Description
1	10/06/2017	COORDINATION SET
2	11/10/2017	75%-90% REVIEW COORD. SET

REVISION HISTORY

No.	Date	Description

© 2015 These drawings and their contents are the property of FUGLEBERG KOCH, P.L.C. • ARCHITECTS and are issued only for the specific project noted on these drawings. Any reproductions, revisions, or modifications of these documents without the expressed written consent of Fugleberg Koch, P.L.C. is prohibited by law.

FUGLEBERG KOCH
2555 Temple Trail, Winter Park, FL 32789 (407) 629-0595
www.fuglebergkoch.com BR569

CONSULTANT
Joseph, Lawrence & Co
Consulting Engineers
1180 HARWOOD AVE. SUITE 3000
ALTAMONTE SPRINGS, FLORIDA 32714
TEL: 321.972.4466
WWW.JLCENG.COM
CA NO. 28730

JLC 17.0137.00

Adam Joseph Barney
P.E. #:69124

SUMMER BAY APTS. II
LAKE COUNTY, FL

Drawn:	MJR/KCM
Checked:	BLS/AJB
Approval:	BLS/AJB
Date:	11/10/2017
Project #:	5389

BUILDING TYPE 2 - LEVEL 3 PLAN - PLUMBING

P3.03

GENERAL NOTES

1. SEE SHEETS P6.01 AND P6.02 FOR RISER DIAGRAMS.

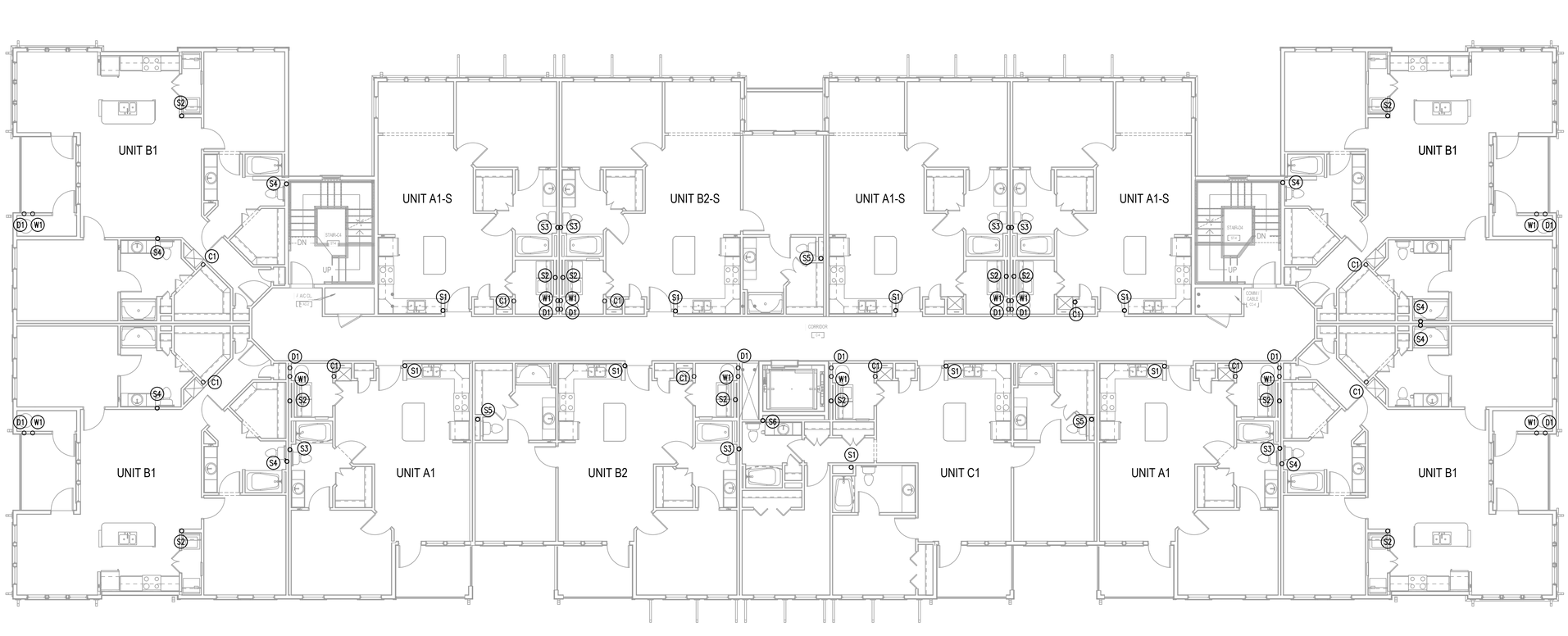

H1 BUILDING TYPE 2 - LEVEL 4 - PLUMBING
1/8" = 1'-0"

PERMIT REVIEW STAMP

ISSUE HISTORY

No.	Date	Description
1	10/06/2017	COORDINATION SET
2	11/10/2017	75%-90% REVIEW COORD. SET

REVISION HISTORY

No.	Date	Description

© 2015 These drawings and their contents are the property of FUGLEBERG KOCH, P.L.C. • ARCHITECTS and are issued only for the specific project noted on these drawings. Any reproductions, revisions, or modifications of these documents without the expressed written consent of Fugleberg Koch, P.L.C. is prohibited by law.

FUGLEBERG KOCH
2555 Temple Trail, Winter Park, FL 32789 (407) 629-0595
www.fuglebergkoch.com BR569

CONSULTANT
Joseph, Lawrence & Co
Consulting Engineers
1180 HARWOOD AVE. SUITE 3000
ALTAMONTE SPRINGS, FLORIDA 32714
TEL: 321.972.4466
WWW.JLCENG.COM
CA NO. 28730

JLC 17.0137.00

Adam Joseph Barney
P.E. #:69124

SUMMER BAY APTS. II
LAKE COUNTY, FL

Drawn:	MJR/KCM
Checked:	BLS/AJB
Approval:	BLS/AJB
Date:	11/10/2017
Project #:	5389

BUILDING TYPE 2 - LEVEL 4 PLAN - PLUMBING

P3.04

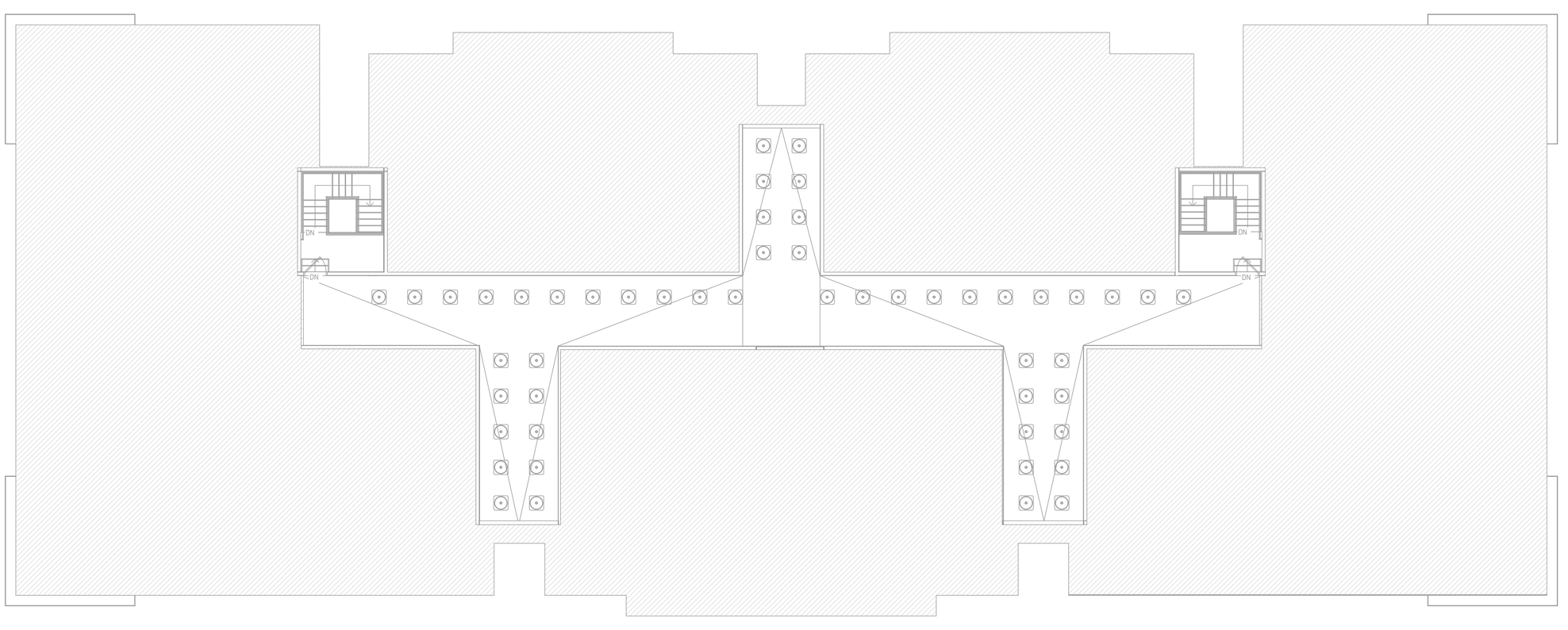

H1 BUILDING TYPE 2 - ROOF - PLUMBING
1/8" = 1'-0"

PERMIT REVIEW STAMP

ISSUE HISTORY

No.	Date	Description
1	10/06/2017	COORDINATION SET
2	11/10/2017	75%-90% REVIEW COORD. SET

REVISION HISTORY

No.	Date	Description

© 2015 These documents and their contents are the property of FUGLEBERG KOCH, PLLC - AA26002103, and are issued only for the specific project noted on these drawings. Any reproductions, revisions, or modifications of these documents without the expressed written consent of Fugleberg Koch, PLLC is prohibited by law.

FUGLEBERG KOCH
2555 Temple Trail, Winter Park, FL 32789 (407) 629-0595
www. fuglebergkoch.com BR569

CONSULTANT
Joseph, Lawrence & Co
Consulting Engineers
1180 HARWOOD AVE. SUITE 3000
ALTAMONTE SPRINGS, FLORIDA 32714
TEL: 321.972.4466
WWW.JLCENG.COM
CA NO. 28730

JLC 17.0137.00

Adam Joseph Barney
P.E. #:69124

SUMMER BAY APTS. II
LAKE COUNTY, FL

Drawn:	MJR/KCM
Checked:	BLS/AJB
Approval:	BLS/AJB
Date:	11/10/2017
Project #:	5389

BUILDING TYPE 2 - ROOF - PLUMBING

P3.05

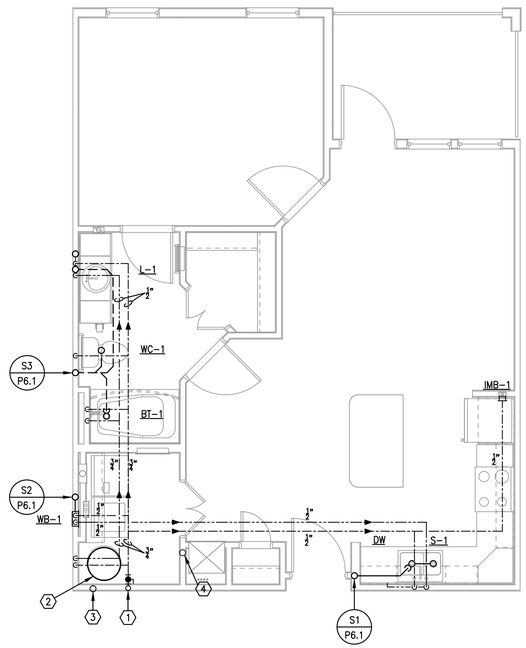

D1 ENLARGED TYPICAL UNIT TYPE 'A1' - PLUMBING
1/4" = 1'-0"

REFERENCE NOTES: (X)

1. COLD WATER RISER WITH UNIT SHUT-OFF VALVE & REMOTE READ SUB-METER. CONTRACTOR TO INSTALL SUB-METER FURNISHED BY OWNER. SEE BUILDING PLAN FOR RISER TAG.
2. ELECTRIC WATER HEATER EWH-1 SEE SCHEDULE & DETAIL.
3. TPV & PAN DRAIN RISER. SEE RISER DIAGRAM.
4. CONDENSATE STACK. SEE RISER DIAGRAM FOR PIPE SIZES.

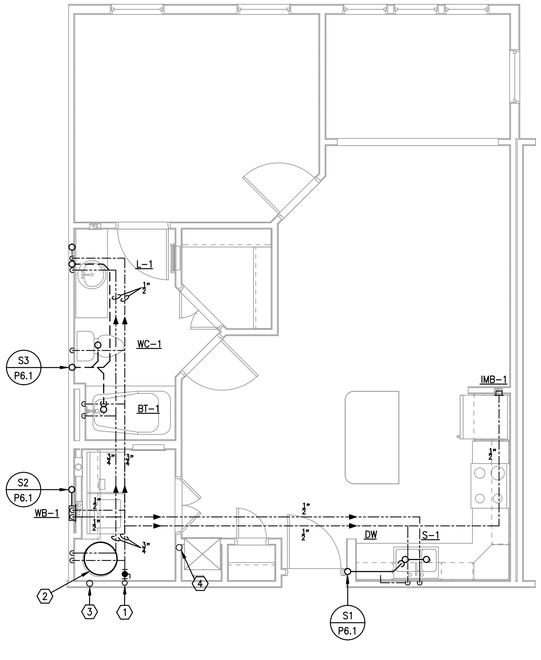

H1 ENLARGED TYPICAL UNIT TYPE 'A1S' - PLUMBING
1/4" = 1'-0"

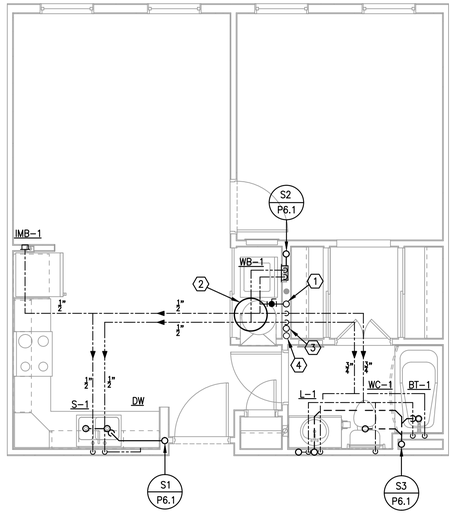

H5 ENLARGED TYPICAL UNIT TYPE 'S1' - PLUMBING
1/4" = 1'-0"

PERMIT REVIEW STAMP

ISSUE HISTORY

No.	Date	Description
1	10/06/2017	COORDINATION SET
2	11/10/2017	75%-90% REVIEW COORD. SET

REVISION HISTORY

No.	Date	Description

© 2015 These documents and their contents are the property of FUGLEBERG KOCH, PLLC - AA26002103, and are issued only for the specific project noted on these drawings. Any reproductions, revisions, or modifications of these documents without the expressed written consent of Fugleberg Koch, PLLC is prohibited by law.

FUGLEBERG KOCH
2555 Temple Trail, Winter Park, FL 32789 (407) 629-0595
www.fuglebergkoch.com BR569

CONSULTANT
Joseph, Lawrence & Co
Consulting Engineers
1180 HARWOOD AVE. SUITE 3000
ALTAMONTE SPRINGS, FLORIDA 32714
TEL: 321.972.4466
WWW.JLCENG.COM
CA NO. 28730

JLC 17.0137.00

Adam Joseph Barney
P.E. #:69124

SUMMER BAY APTS. II
LAKE COUNTY, FL

Drawn:	MJR/KCM
Checked:	BLS/AJB
Approval:	BLS/AJB
Date:	11/10/2017
Project #:	5389

ENLARGED TYPICAL UNIT PLANS - PLUMBING

P4.01

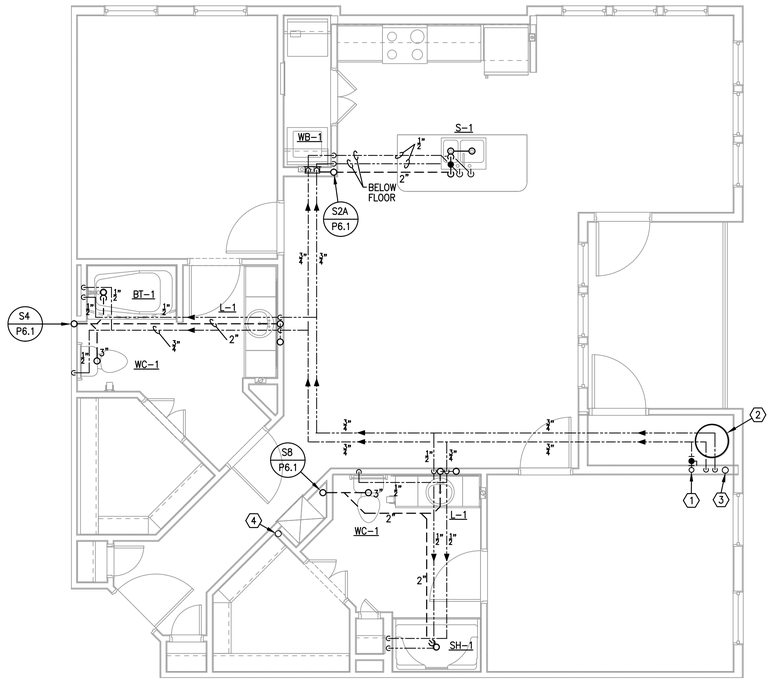

D1 ENLARGED TYPICAL UNIT TYPE 'B1' - PLUMBING
1/4" = 1'-0"

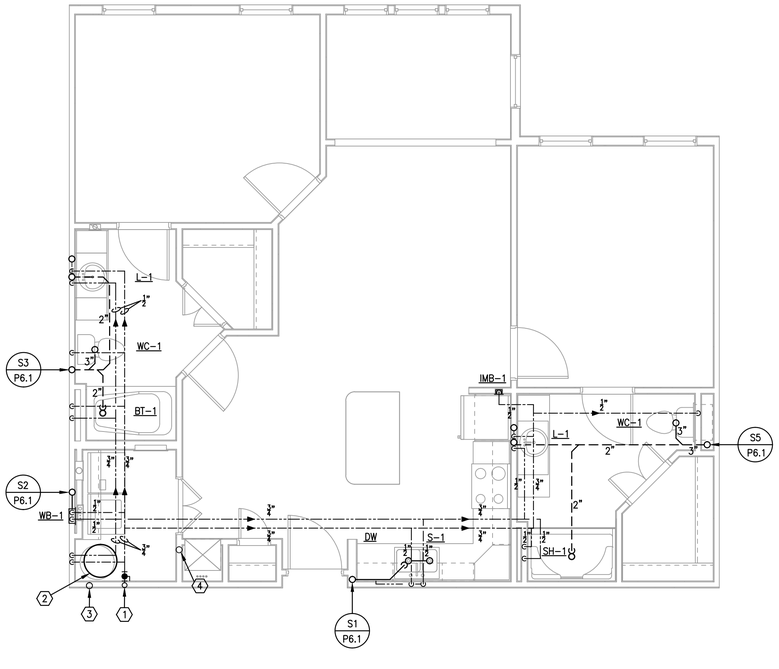

H1 ENLARGED TYPICAL UNIT TYPE 'B2S' - PLUMBING
1/4" = 1'-0"

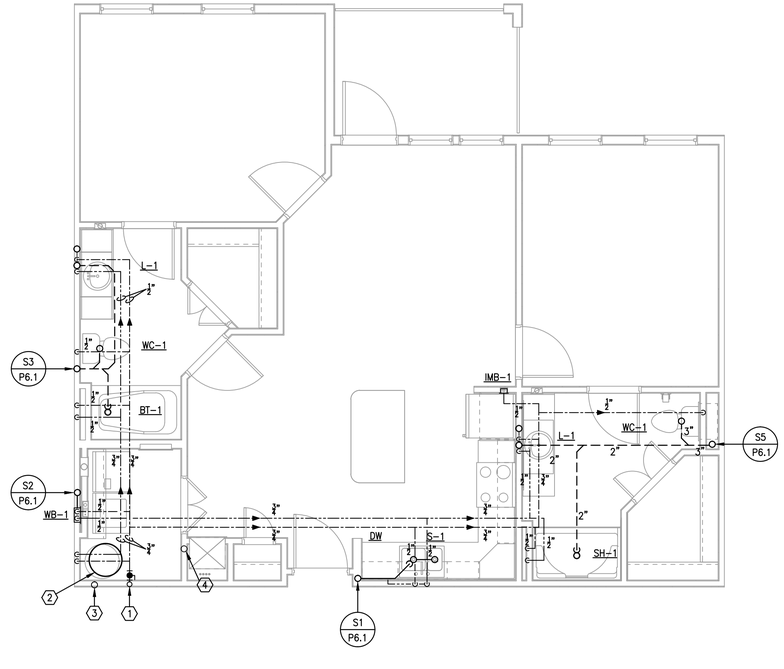

H5 ENLARGED TYPICAL UNIT TYPE 'B2' - PLUMBING
1/4" = 1'-0"

REFERENCE NOTES: (X)

1. COLD WATER RISER WITH UNIT SHUT-OFF VALVE & REMOTE READ SUB-METER. CONTRACTOR TO INSTALL SUB-METER FURNISHED BY OWNER. SEE BUILDING PLAN FOR RISER TAG.
2. ELECTRIC WATER HEATER EWH-1 SEE SCHEDULE & DETAIL.
3. TPV & PAN DRAIN RISER. SEE RISER DIAGRAM.
4. CONDENSATE STACK. SEE RISER DIAGRAM FOR PIPE SIZES.

PERMIT REVIEW STAMP

ISSUE HISTORY

No.	Date	Description
1	10/06/2017	COORDINATION SET
2	11/10/2017	75%-90% REVIEW COORD. SET

REVISION HISTORY

No.	Date	Description

© 2015 These documents and their contents are the property of FUGLEBERG KOCH, PLLC - AA26002103, and are issued only for the specific project noted on these drawings. Any reproductions, revisions, or modifications of these documents without the expressed written consent of Fugleberg Koch, PLLC is prohibited by law.

FUGLEBERG KOCH
2555 Temple Trail, Winter Park, FL 32789 (407) 629-0595
www.fuglebergkoch.com BR569

CONSULTANT
Joseph, Lawrence & Co
Consulting Engineers
1180 HARWOOD AVE. SUITE 3000
ALTAMONTE SPRINGS, FLORIDA 32714
TEL: 321.972.4466
WWW.JLCENG.COM
CA NO. 28730

JLC 17.0137.00

Adam Joseph Barney
P.E. #:69124

SUMMER BAY APTS. II
LAKE COUNTY, FL

Drawn:	MJR/KCM
Checked:	BLS/AJB
Approval:	BLS/AJB
Date:	11/10/2017
Project #:	5389

ENLARGED TYPICAL UNIT PLANS - PLUMBING

P4.02

REFERENCE NOTES: (X)

1. COLD WATER RISER WITH UNIT SHUT-OFF VALVE & REMOTE READ SUB-METER. CONTRACTOR TO INSTALL SUB-METER FURNISHED BY OWNER. SEE BUILDING PLAN FOR RISER TAG.
2. ELECTRIC WATER HEATER EWH-1 SEE SCHEDULE & DETAIL.
3. TPV & PAN DRAIN RISER. SEE RISER DIAGRAM.
4. CONDENSATE STACK. SEE RISER DIAGRAM FOR PIPE SIZES.

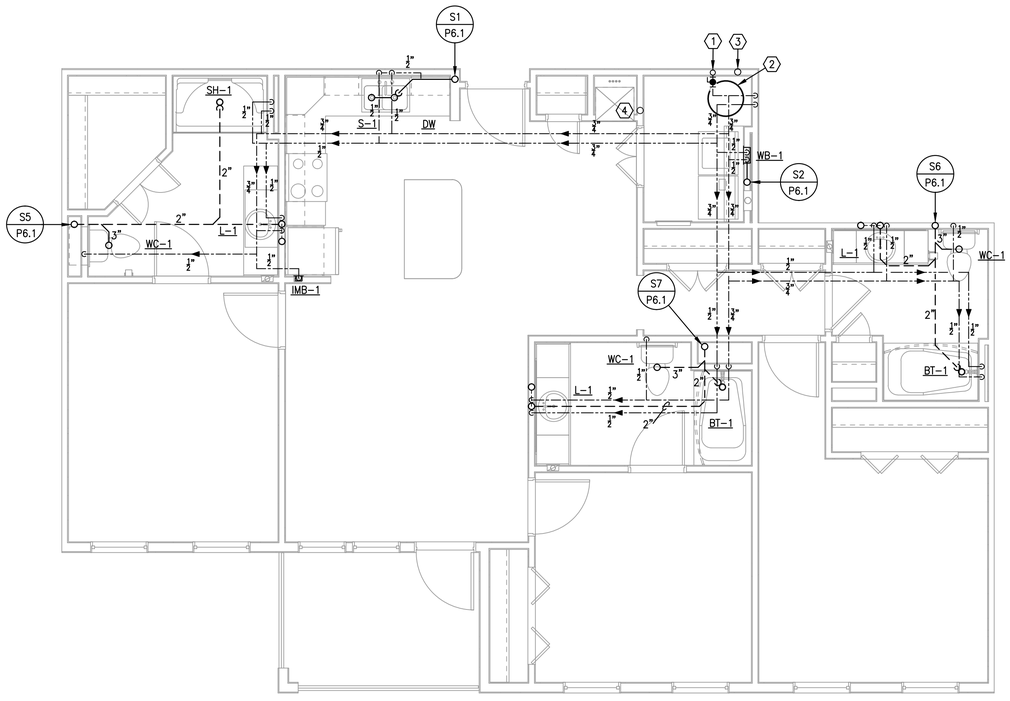

F4 ENLARGED TYPICAL UNIT TYPE 'C1' - PLUMBING
1/4" = 1'-0"

PERMIT REVIEW STAMP

ISSUE HISTORY

No.	Date	Description
1	10/06/2017	COORDINATION SET
2	11/10/2017	75%-90% REVIEW COORD. SET

REVISION HISTORY

No.	Date	Description

FUGLEBERG KOCH
2555 Temple Trail, Winter Park, FL 32789 (407) 629-0595
www.fuglebergkoch.com BR569

CONSULTANT
Joseph, Lawrence & Co
Consulting Engineers
1180 HARWOOD AVE. SUITE 3000
ALTAMONTE SPRINGS, FLORIDA 32714
TEL: 321.972.4466
WWW.JLCENG.COM
CA NO. 28730

JLC 17.0137.00

Adam Joseph Barney
P.E. #:69124

SUMMER BAY APTS. II
LAKE COUNTY, FL

Drawn:	MJR/KCM
Checked:	BLS/AJB
Approval:	BLS/AJB
Date:	11/10/2017
Project #:	5389

ENLARGED TYPICAL UNIT PLANS - PLUMBING

P4.03

© 2015 These documents and their contents are the property of FUGLEBERG KOCH, PLLC - AA26002103, and are issued only for the specific project noted on these drawings. Any reproductions, revisions, or modifications of these documents without the expressed written consent of Fugleberg Koch, PLLC is prohibited by law.

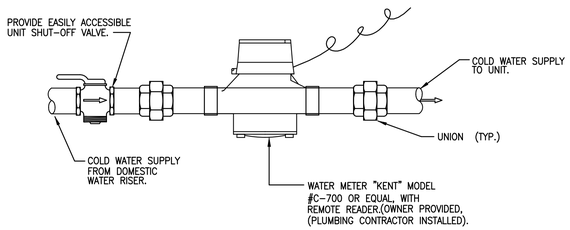

3 NTS **WATER METER DETAIL**
NTS

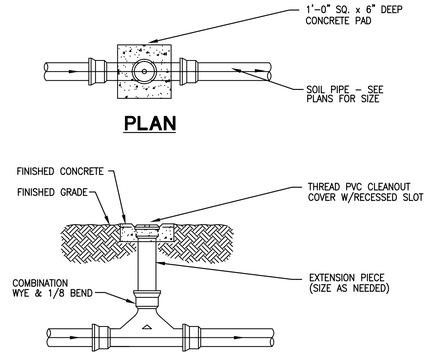

2 NTS **TWO WAY CLEAN OUT DETAIL**
NTS

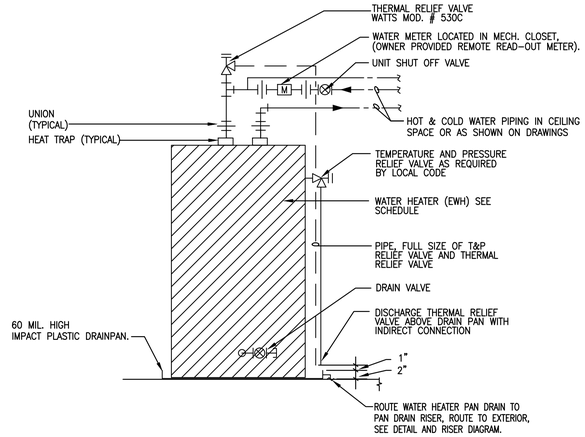

1 NTS **WATER HEATER DETAIL**
NTS

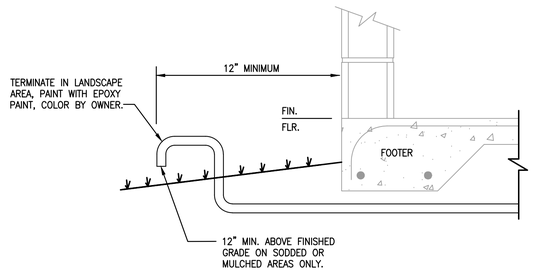

4 NTS **CONDENSATE & WATER HEATER SAFETY PAN DISCHARGE TERMINATION DETAIL**

PLUMBING FIXTURE SCHEDULE (OR EQUAL)

MARK	FIXTURE	WASTE	TRAP	VENT	COLD WATER	HOT WATER	MANUFACTURER /MODEL #	DESCRIPTION
WC-1	WATER CLOSET	3"	INTEG	2"	1/2"	-	WESTERN POTTERY #8251	"BOLINA" FLOOR MOUNTED TANK TYPE, 1.28 GALLONS PER FLUSH, HIGH EFFICIENCY LOW WATER CONSUMPTION, WHITE VITREOUS CHINA, ELONGATED, PROVIDE ANGLE STOP, SUPPLY TUBE & ESCUTCHEONS. SOLID PLASTIC, CLOSED FRONT, SEAT WITH COVER.
L-1	LAVATORY	1-1/2"	1-1/4"	1-1/2"	1/2"	1/2"	SEASONS SE10002 ASPEN #411844	OVAL, VITREOUS CHINA, 20"X17", SELF RIMMING WITH FRONT OVERFLOW. 'BRADSHIRE' CENTERSET SINGLE CONTROL LAVATORY CHROME PLATED FAUCET & POP UP WASTE. PROVIDE BRASSCRAFT ANGLE STOP SUPPLIES W/SUPPLY TUBES AND ESCUTCHEONS, 1.2 GPM.
S-1	SINK	2"	1-1/2"	1-1/2"	1/2"	1/2"	ELKAY LR3321PD ESSEN #120098 BRASS CRAFT #CR1912DL	STAINLESS STEEL DOUBLE BOWL TOP MOUNT SINK, SELF RIMMING, 18 GAUGE S.S. OVERALL SIZE: 33" x 24-1/4" x 7-3/4". SINGLE HANDLE KITCHEN FAUCET, 1.5 GPM, BRUSHED NICKEL FINISH, WITH SPRAY. PROVIDE ANGLE STOPS. SUPPLY TUBES & ESCUTCHEONS. ROUGH BRASS STOPS, PLASTIC ESCUTCHEONS, SUPPLIES, TRAPS, & DISPOSAL WASTE. PROVIDE LEVER HANDLE FAUCETS. GARBAGE DISPOSAL: INSINKERATOR BADGER 5XP, GALVANIZED STEEL, 3/4 H.P., 120V-1PH, QUIET DURADRIVE INDUCTION MOTOR.
DW	DISHWASHER	5/8"	-	-	-	1/2"	BY OTHERS	REFER TO ARCHITECTURAL DRAWINGS FOR SELECTION.
BT-1	BATHTUB	1-1/2"	1-1/2"	1-1/2"	1/2"	1/2"	AQUATIC 6036CTM	5'-0" x 3'-0" COMPOSITE TUB WITH SLIP RESISTANT FLOOR. SYMMONS S-4702-X-LR TEMPTROL PRESSURE BALANCING MIXING VALVE, ESCUTCHEON, 2.0 GPM SHOWER HEAD, LEVER HANDLE, TUB FILLER.
WCO-1	WALL CLEAN-OUT	SIZE/ SEE DWG.	-	-	-	-	ZURN Z1446 OR EQUAL	CAST IRON CLEAN-OUT TEE, DURA COATED BODY, GAS AND WATERTIGHT ABS TAPERED THREAD PLUG AND ROUND, SMOOTH STAINLESS STEEL WALL ACCESS COVER WITH SECURING SCREW.
FCO-1	FLOOR CLEAN-OUT	SIZE/ SEE DWG.	-	-	-	-	JOSAM 57000-31 OR EQUAL	PVC CLEAN-OUT WITH 2-WAY CLEAN-OUT TEE, COUNTER SUNK PLUG (MOUNTED IN FLUSH 12"x12"x4" CONCRETE PAD.)
TPV-1	TRAP PRIMER VALVE	-	-	-	1/2"	-	PRECISION PLUMBING PRODUCTS PR-500 OR EQUAL	PROVIDE FULLY ACCESSIBLE SHUT OFF VALVE TO EACH PRIMER VALVE.
WHA-1	WATER HAMMER ARRESTOR	-	-	-	-	-	SIOUX CHIEF #650 SERIES OR EQUAL	SIZE PER MANUFACTURER'S RECOMMENDATIONS. PDI CERTIFIED. WHA-1: SIZE "A" WHA-2: SIZE "B" REFER TO RISER DIAGRAMS FOR ARRESTOR LOCATIONS. REFER TO SPECIFICATION FOR SELECTION METHOD.
HB-1	HOSE BIBB	-	-	-	1/2"	-	WOODFORD #79 OR EQUAL	BRASS, CHROME PLATED, WALL MOUNTED FOR NON-FREEZING AREAS, 2-5/8" DEEP TO FIT IN STANDARD 2" x 4" FRAMED WALLS, VACUUM BREAKER, LOOSE KEY OPERATOR.
WB-1	WASHER BOX	2"	2"	-	1/2"	1/2"	OATEY #38933 OR EQUAL	VALVE 36"AFF. HIGH IMPACT PLASTIC BOX W/ DIMENSION OF 9" HIGH x 10 3/4" WIDE. PROVIDE 1/2" FIP INLET x 1/4" OD OUTLET COMPRESSION ANGLE VALVE. SUPPLY CONNECTION SIZE SHALL BE 1/2" OD.
IMB-1	ICE MAKER BOX	-	-	-	1/2"	-	OATEY #38486	1/4" TURN BRASS BALL VALVE,COPPER SWEAT, 1 HOUR FIRE RATED

NOTES:
1. ALL PLUMBING FIXTURES SHALL BE SUPPLIED WITH WATTS "FLOODSAFE" AUTO-SHUT OFF CONNECTOR TYPE SUPPLY RISERS WITH BRAIDED STAINLESS STEEL CONNECTORS. THIS SHALL INCLUDE ALL FAUCETS, AND TOILETS.
2. PROVIDE FULLY ACCESSIBLE WATER HAMMER ARRESTORS ON ALL DISHWASHERS, ICE MAKER BOXES, AND WASHER BOX WATER SUPPLIES.

ELECTRIC WATER HEATER SCHEDULE

UNIT #	TYPE	GALLONS	INPUT KW	EFF. RATING	GPH REC. @ 90°F RISE	VOLT/PHASE CURRENT DRAW (PER PHASE)	WEIGHT (LBS.)	DIMENSIONS	MANUFACTURER	
									MANUFACTURER	MODEL #
EWH-1	ELECTRIC	40	4.5	.95	21	208V - 1ø	508	60-1/2" H x 20"ø	AO SMITH	PXHT-40

NOTES:
1. PROVIDE WITH EXPANSION VALVE, T & P VALVE AND WATER HEATER DRAIN PAN.
2. COORDINATE WATER HEATER LOCATION AND PIPING WITH MECHANICAL AND ELECTRICAL PLANS.

PERMIT REVIEW STAMP

ISSUE HISTORY

No.	Date	Description
1	10/06/2017	COORDINATION SET
2	11/10/2017	75%-90% REVIEW COORD. SET

REVISION HISTORY

No.	Date	Description

The property of FUGLEBERG KOCH, P.L.C. 4426001(0) and are issued only for the specific project noted on these drawings. Any reproductions, revisions, or modifications of these documents without the expressed written consent of Fugleberg Koch, P.L.C. is prohibited by law.
© 2016 These drawings and the concepts are the property of FUGLEBERG KOCH, P.L.C.

FUGLEBERG KOCH
2555 Temple Trail, Winter Park, FL 32789 (407) 629-0595
www.fuglebergkoch.com BR569

CONSULTANT
Joseph, Lawrence & Co Consulting Engineers
1180 HARWOOD AVE. SUITE 3000
ALTAMONTE SPRINGS, FLORIDA 32714
TEL: 321.972.4466
WWW.JLCENG.COM
CA NO. 28730

JLC 17.0137.00

Adam Joseph Barney
P.E. #.69124

SUMMER BAY APTS. II
LAKE COUNTY, FL

Drawn:	MJR/KCM
Checked:	BLS/AJB
Approval:	BLS/AJB
Date:	11/10/2017
Project #:	5389

SCHEDULES PLUMBING

P5.01

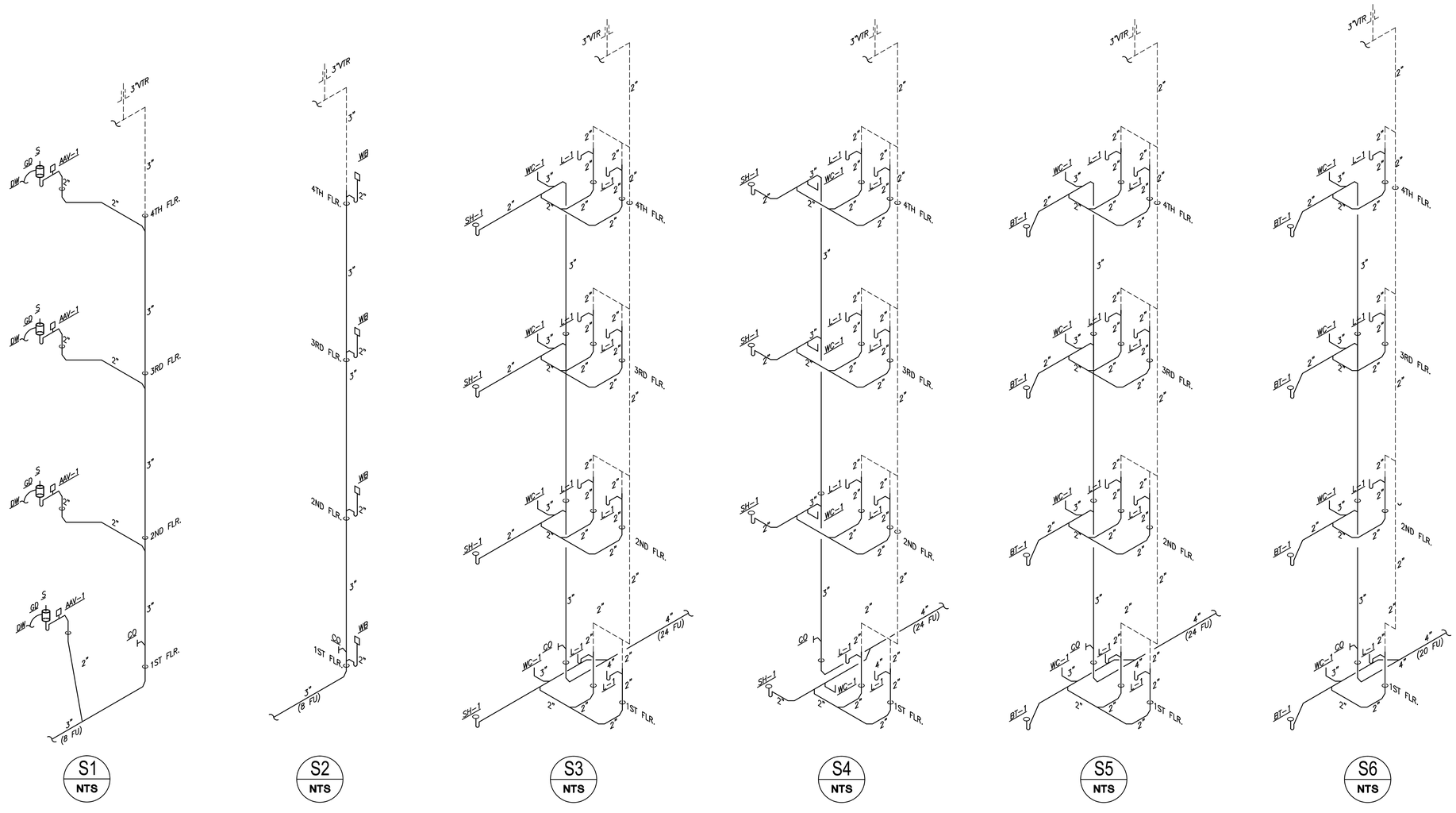

SANITARY RISER DIAGRAMS
NTS

PERMIT REVIEW STAMP

ISSUE HISTORY

No.	Date	Description
1	10/06/2017	COORDINATION SET
2	11/10/2017	75%-90% REVIEW COORD. SET

REVISION HISTORY

No.	Date	Description

FUGLEBERG KOCH
2555 Temple Trail, Winter Park, FL 32789 (407) 629-0595
www.fuglebergkoch.com BR569

CONSULTANT
Joseph, Lawrence & Co
Consulting Engineers
1180 HARWOOD AVE. SUITE 3000
ALTAMONTE SPRINGS, FLORIDA 32714
TEL: 321.972.4466
WWW.JLCENG.COM
CA NO. 28730

JLC 17.0137.00

Adam Joseph Barney
P.E. #:69124

SUMMER BAY APTS. II
LAKE COUNTY, FL

Drawn:	MJR/KCM
Checked:	BLS/AJB
Approval:	BLS/AJB
Date:	11/10/2017
Project #:	5389

RISER DIAGRAMS PLUMBING

P6.01

© 2015 These documents and their contents are the property of FUGLEBERG KOCH, PLLC - AA26002103, and are issued only for the specific project noted on these drawings. Any reproductions, revisions, or modifications of these documents without the expressed written consent of Fugleberg Koch, PLLC is prohibited by law.

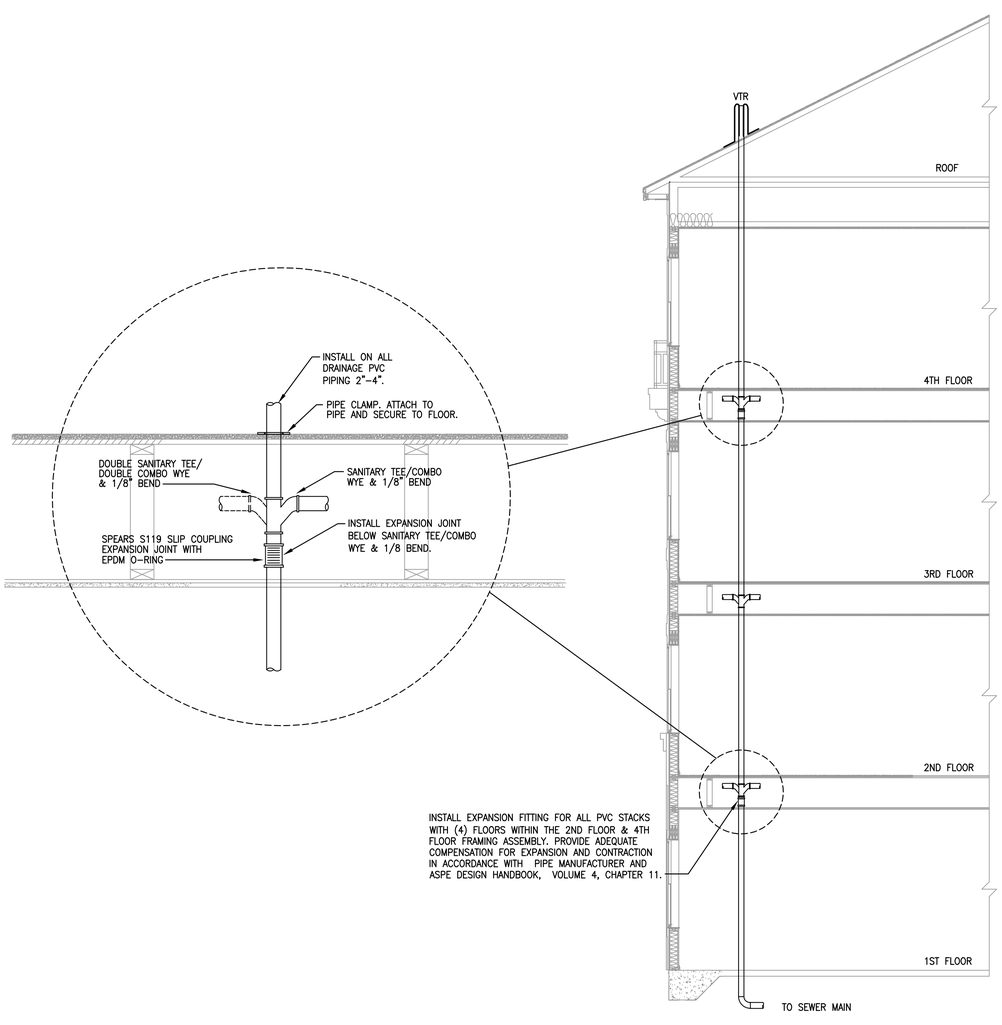

D1 NTS **SANITARY WASTE STACK EXPANSION DETAIL**
NTS

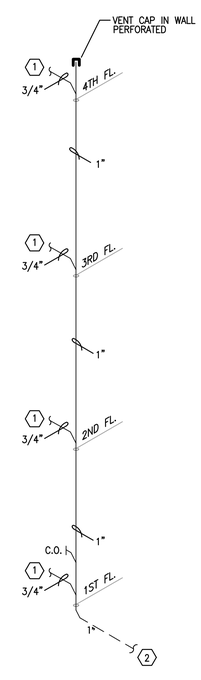

CONDENSATE DETAIL NOTES:
1 CONNECTION TO HVAC A/C UNIT BY MECHANICAL CONTRACTOR (TYPICAL)
2 SEE FIRST FLOOR BUILDING PLANS FOR CONTINUATION.

C1 NTS **CONDENSATE RISER DIAGRAM**
NTS

PERMIT REVIEW STAMP

ISSUE HISTORY

No.	Date	Description
1	10/06/2017	COORDINATION SET
2	11/10/2017	75%-90% REVIEW COORD. SET

REVISION HISTORY

No.	Date	Description

© 2015 These documents and their contents are the property of FUGLEBERG KOCH, P.L.C. • ADD0001333 and are issued only for the specific project noted on these drawings. Any reproductions, revisions, or modifications of these documents without the expressed written consent of Fugleberg Koch, P.L.C. is prohibited by law.

FUGLEBERG KOCH
2555 Temple Trail, Winter Park, FL 32789 (407) 629-0595
www.fuglebergkoch.com BR569

CONSULTANT
Joseph, Lawrence & Co
Consulting Engineers
1180 HARWOOD AVE. SUITE 3000
ALTAMONTE SPRINGS, FLORIDA 32714
TEL: 321.972.4466
WWW.JLCENG.COM
CA NO. 28730

JLC 17.0137.00

Adam Joseph Barney
P.E. #:69124

SUMMER BAY APTS. II
LAKE COUNTY, FL

Drawn:	MJR/KCM
Checked:	BLS/AJB
Approval:	BLS/AJB
Date:	11/10/2017
Project #:	5389

RISER DIAGRAMS PLUMBING

P6.02

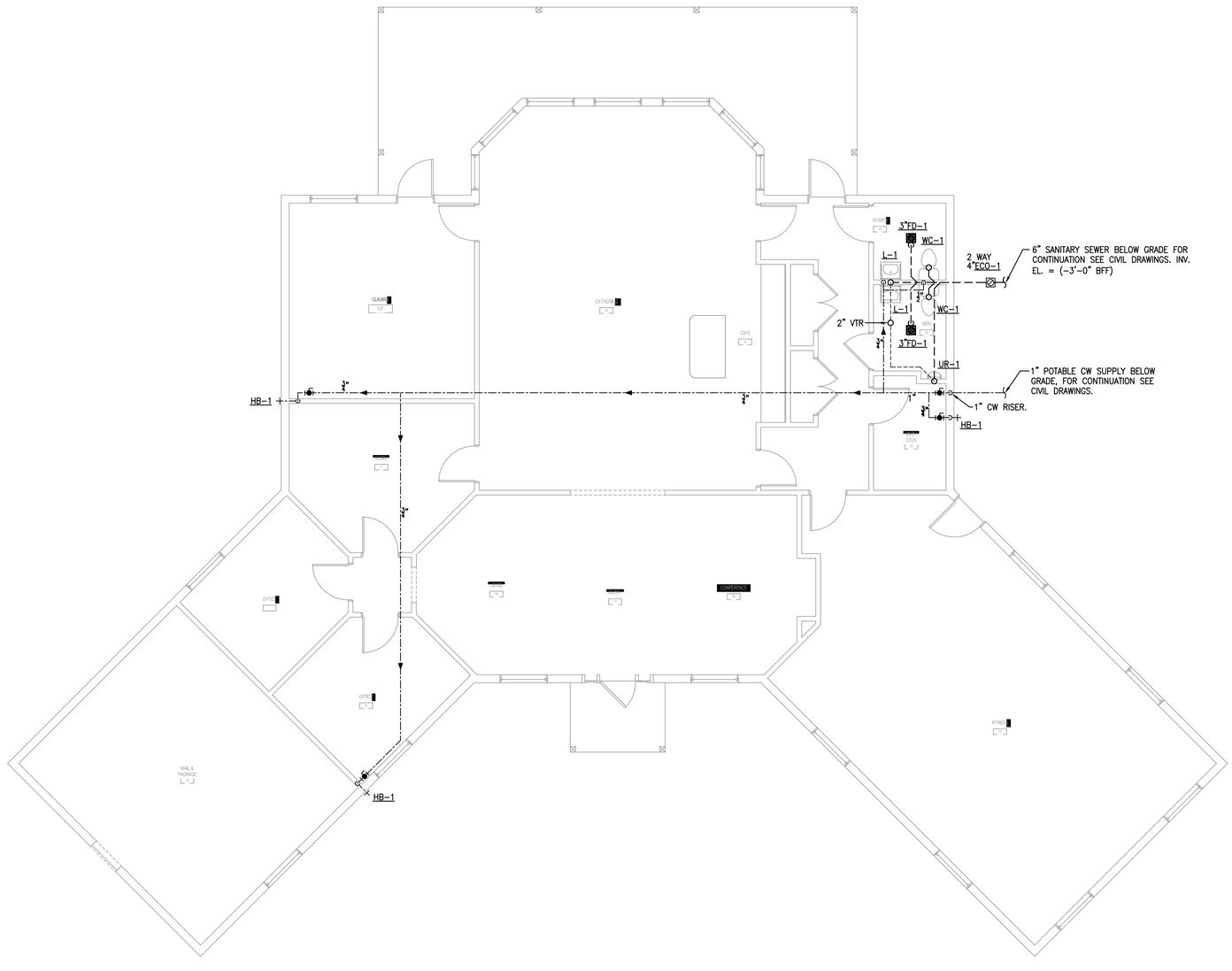

H1 CLUBHOUSE FLOOR PLAN - PLUMBING
3/16" = 1'-0"

PERMIT REVIEW STAMP

ISSUE HISTORY

No.	Date	Description
1	10/06/2017	COORDINATION SET
2	11/10/2017	75%-90% REVIEW COORD. SET

REVISION HISTORY

No.	Date	Description

FUGLEBERG KOCH
2555 Temple Trail, Winter Park, FL 32789 (407) 629-0595
www.fuglebergkoch.com BR569

CONSULTANT
Joseph, Lawrence & Co
Consulting Engineers
1180 HARWOOD AVE. SUITE 3000
ALTAMONTE SPRINGS, FLORIDA 32714
TEL: 321.972.4466
WWW.JLCENG.COM
CA NO. 28730

JLC 17.0137.00

Blake Lawrence Sandy
P.E. #: 69024

SUMMER BAY APTS. II
LAKE COUNTY, FL

Drawn:	MJR/KCM
Checked:	BLS/AJB
Approval:	BLS/AJB
Date:	11/10/2017
Project #:	5389

CLUBHOUSE FLOOR PLAN - PLUMBING

P12.01

© 2015 These documents and their contents are the property of FUGLEBERG KOCH, PLLC - AA26002103, and are issued only for the specific project noted on these drawings. Any reproductions, revisions, or modifications of these documents without the expressed written consent of Fugleberg Koch, PLLC is prohibited by law.

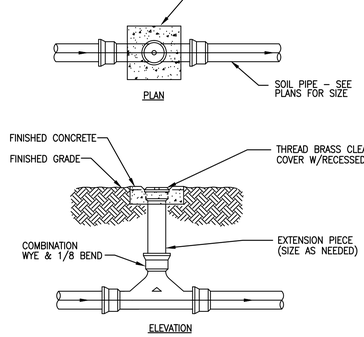

2 NTS EXTERIOR 2 WAY CLEAN OUT DETAIL

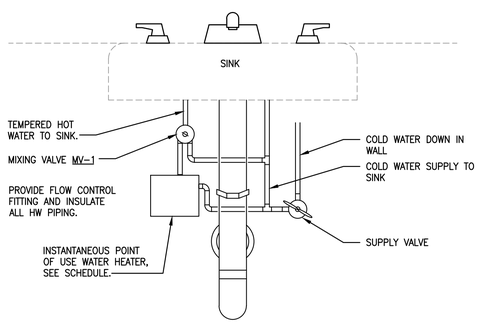

1 NTS INSTANTANEOUS WATER HEATER PIPING DETAIL

PLUMBING FIXTURE SCHEDULE - CLUBHOUSE (OR EQUAL)

MARK	FIXTURE	WASTE	TRAP	VENT	COLD WATER	HOT WATER	MANUFACTURER /MODEL #	DESCRIPTION
WC-1	WATER CLOSET - ADA TYPE	3"	INTEG	2"	1/2"	-	AMERICAN STANDARD 2998.012 OR EQUAL	RIM 16-1/2"AFF. TANK TYPE, VITREOUS CHINA, 1.6 GPF, SIPHON JET, ELONGATED BOWL, FLOOR MOUNTED, CLOSED COUPLED COMBINATION, BOLT CAPS. 'BRASSCRAFT' ANGLE STOP SUPPLY & ESCUTCHEON. 'BEMIS' SOLID PLASTIC, OPEN FRONT ELONGATED SEAT. WITH SELF SUSTAINING CHECK HINGES. FLUSH HANDLE TO BE ON OPEN SIDE OF TOILET CLEAR SPACE.
L-1	LAVATORY - ADA TYPE	2"	1-1/4"	1-1/2"	1/2"	1/2"	AMERICAN STANDARD 0355.012 OR EQUAL	LUCERNE 20" x 18" WALL HUNG, VITREOUS CHINA WITH INTEGRAL BACKSPLASH. 'AMERICAN STANDARD' #2275.500, 4" CENTERS, C.P. METAL, TWO-LEVER HANDLE FAUCET. GRID STRAINER WITH TAILPIECE, C.P. BRASS P-TRAP WITH WALL ARM & ESCUTCHEONS. 'BRASSCRAFT' ANGLE VALVE SUPPLY RISERS W/LOOSE KEY STOPS. INSULATE P-TRAP AND SUPPLIES WITH 'TRUEBRO' INSULATION KIT. 'ZURN' 1231 CAST IRON FLOOR MOUNTED CARRIER FITTING WITH CONCEALED ARMS.
HB-1	HOSE BIBB	-	-	-	1/2"	-	WOODFORD #B24 OR EQUAL	CONCEALED NON-FREEZE, WALL HYDRANT, COMPLETE WITH BRONZE BODY, ALL BRONZE INTERIOR PARTS, REPLACEABLE SEAT WASHER, INTEGRAL VACUUM BREAKER, KEY-OPERATED CONTROL VALVE, AND ¾" FEMALE IP INLET CONNECTION STANDARD. NICKEL BRONZE BOX AND HINGED COVER. AVAILABLE WITH ¾" MALE HOSE CONNECTION. INCLUDES OPERATING KEY.
WHA-1	WATER HAMMER ARRESTOR	-	-	-	-	-	SIOUX CHIEF #650 SERIES OR EQUAL	SIZE PER MANUFACTURER'S RECOMMENDATIONS. PDI CERTIFIED. WHA-1: SIZE "A" WHA-2: SIZE "B" REFER TO RISER DIAGRAMS FOR ARRESTOR LOCATIONS. REFER TO SPECIFICATION FOR SELECTION METHOD.
FD-1	FLOOR DRAIN	SIZE/ SEE DWG.	-	-	-	-	ZURN ZN415S-HD-P OR EQUAL	DURA-COATED CAST IRON BODY WITH BOTTOM OUTLET, COMBINATION INVERTIBLE MEMBRANE CLAMP AND ADJUSTABLE COLLAR WITH SEEPAGE SLOTS AND TYPE 'S' POLISHED BRONZE 6"x6" HEAVY DUTY SQUARE STRAINER. 1/2" TRAP PRIMER CONNECTION.
TPV-1	TRAP PRIMER VALVE	-	-	-	1/2"	-	PRECISION PLUMBING PRODUCTS PR-500 OR EQUAL	PROVIDE FULLY ACCESSIBLE SHUT OFF VALVE TO EACH PRIMER VALVE. PROVIDE TRAP PRIMER TO EACH FLOOR DRAIN.

NOTES:

1. WHERE COLOR/FINISH OPTIONS ARE AVAILABLE FOR FIXTURES, SELECTIONS SHALL BE SUBMITTED TO THE OWNER PRIOR TO PURCHASE AND INSTALLATION.

   VERIFY SINK DIMENSIONS WITH ARCHITECT. RE: MILLWORK.

   REFER TO ARCHITECTURAL DRAWING FOR MOUNTING HEIGHTS OF ALL FIXTURES.

   FIXTURES FOR USE BY THE DISABLED:
   A. INSTALL IN ACCORDANCE WITH A.D.A., STATE AND LOCAL REQUIREMENTS.
   B. THE FORCE REQUIRED TO ACTIVATE FLUSH VALVES SHALL BE 5 LBS MAXIMUM.
   C. FLUSH ACTIVATOR SHALL BE LOCATED ON WIDE SIDE OF THE STALL.
   D. THE FAUCET CONTROLS AND THE OPERATING MECHANISM (OPERABLE WITH ONE HAND) SHALL BE OF THE TYPE NOT REQUIRING AN OPERATING FORCE EXCEEDING 5 LBS, OR TIGHT GRASPING, PINCHING OR TWISTING OF THE WRIST.

ELECTRIC INSTANTANEOUS WATER HEATER SCHEDULE

UNIT #	SERVING	TYPE	GALLONS	INPUT KW	RECOVERY (GPM)	VOLT/PHASE CURRENT DRAW (PER PHASE)	WEIGHT (LBS.)	DIMENSIONS	MANUFACTURER	
									MANUFACTURER	MODEL #
IWH-1	SINK	ELECTRIC	INSTANTANEOUS	8.3	57 DEG RISE @ 1 GPM	208V - 1ø	15	10"H x 4"W x 4"D	EEMAX	PA008208T

NOTES:
1. COORDINATE WATER HEATER SERVICES, PIPING AND LOCATION WITH MECHANICAL AND ELECTRICAL PLANS.

PERMIT REVIEW STAMP

ISSUE HISTORY

No.	Date	Description
1	10/06/2017	COORDINATION SET
2	11/10/2017	75%-90% REVIEW COORD. SET

REVISION HISTORY

No.	Date	Description

The property of FUGLEBERG KOCH, P.L.C. +4200012203 and are issued only for the specific project noted on these drawings. Any reproductions, revisions, or modifications of these documents without the expressed written consent of Fugleberg Koch, P.L.C. is prohibited by law.
© 2015

FUGLEBERG KOCH
2555 Temple Trail, Winter Park, FL 32789 (407) 629-0595
www.fuglebergkoch.com BR569

CONSULTANT

Joseph, Lawrence & Co
Consulting Engineers
1180 HARWOOD AVE. SUITE 3000
ALTAMONTE SPRINGS, FLORIDA 32714
TEL. 321.972.4466
WWW.JLCENG.COM
CA NO. 28730

JLC 17.0137.00

Adam Joseph Barney
P.E. #:69124

SUMMER BAY APTS. II
LAKE COUNTY, FL

Drawn:	MJR/KCM
Checked:	BLS/AJB
Approval:	BLS/AJB
Date:	11/10/2017
Project #:	5389

CLUBHOUSE SCHEDULES AND DETAILS

P12.02

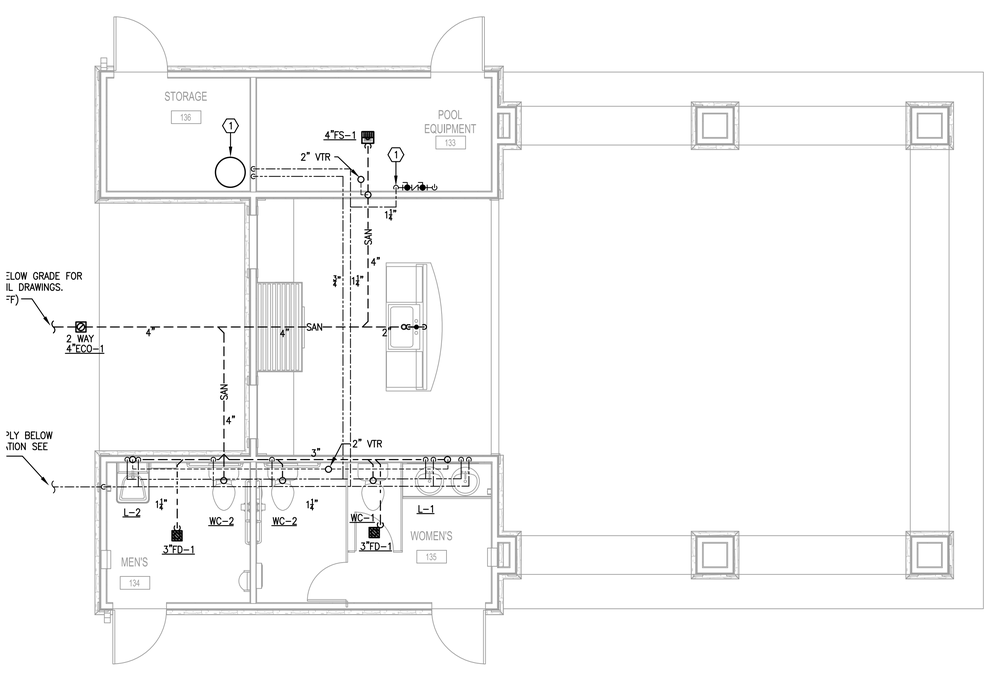

D5 POOL PAVILION FLOOR PLAN - PLUMBING
1/4" = 1'-0"

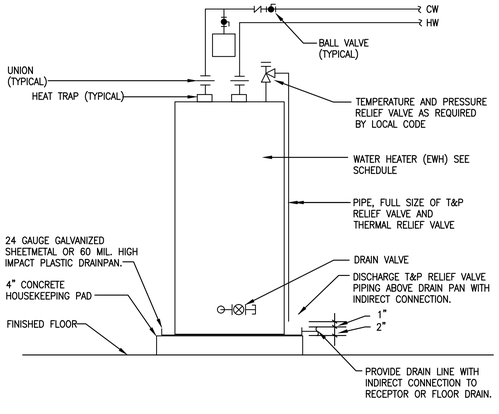

1 NTS ELECTRIC WATER HEATER DETAIL

ELECTRIC WATER HEATER SCHEDULE

UNIT #	SERVING	TYPE	GALLONS	INPUT KW	VOLT/PHASE CURRENT DRAW (PER PHASE)	GPH REC. @ 70°F RISE	WEIGHT (LBS.)	DIMENSIONS	MANUFACTURER	
									MANUFACTURER	MODEL #
EWH-1	CLUBHOUSE	ELECTRIC	30	4.5	208V – 1ø	21	342	50-3/8" H x 19-3/4" ø	RHEEM	PROE30 T2 RH95

NOTES:
1. PROVIDE WITH EXPANSION VALVE, T & P VALVE AND WATER HEATER DRAIN PAN.
2. COORDINATE WATER HEATER LOCATION AND PIPING WITH MECHANICAL AND ELECTRICAL PLANS.

PERMIT REVIEW STAMP

ISSUE HISTORY

No.	Date	Description
1	10/06/2017	COORDINATION SET
2	11/10/2017	75%-90% REVIEW COORD. SET

REVISION HISTORY

No.	Date	Description

FUGLEBERG KOCH
2555 Temple Trail, Winter Park, FL 32789 (407) 629-0595
www.fuglebergkoch.com BR569

CONSULTANT
Joseph, Lawrence & Co
Consulting Engineers
1180 HARWOOD AVE. SUITE 3000
ALTAMONTE SPRINGS, FLORIDA 32714
TEL: 321.972.4466
WWW.JLCENG.COM
CA NO. 28730

JLC 17.0137.00

Adam Joseph Barney
P.E. #:69124

SUMMER BAY APTS. II
LAKE COUNTY, FL

Drawn:	MJR/KCM
Checked:	BLS/AJB
Approval:	BLS/AJB
Date:	11/10/2017
Project #:	5389

POOL PAVILION FLOOR PLAN - PLUMBING

P13.01

© 2015 These documents and their contents are the property of FUGLEBERG KOCH, PLLC - AA26002103, and are issued only for the specific project noted on these drawings. Any reproductions, revisions, or modifications of these documents without the expressed written consent of Fugleberg Koch, PLLC is prohibited by law.