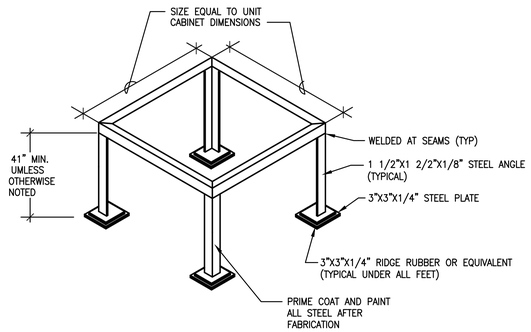

7 STEEL ANGLE UNIT STAND DETAIL
NTS

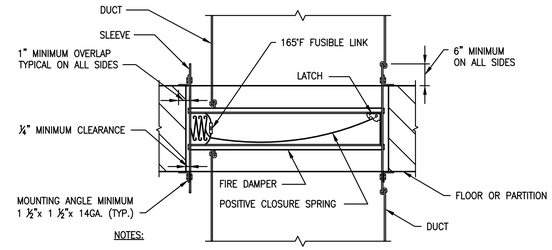

NOTES:

1. DAMPERS SHALL BE CONSTRUCTED, TESTED AND LABELLED IN ACCORDANCE WITH UNDERWRITERS LABORATORIES SAFETY STANDARD 555 FOR DYNAMIC SYSTEMS AND SHALL BE PROVIDED WITH CLOSURE SPRINGS.
2. INSTALLATION SHALL BE IN STRICT ACCORDANCE WITH THE MAUFACTURER'S INSTRUCTIONS.
3. SECURE MOUNTING ANGLES TO SLEEVE AT A MAXIMUM 6" ON CENTER.
4. CLEARANCE BETWEEN FIRE DAMPER SLEEVE AND OPENING SHALL BE ¼" PER FOOT OF HEIGHT (OR WIDTH) UNLESS OTHERWISE STATED IN THE LISTING OF THE ASSEMBLY.
5. PROVIDE ACCESS PANEL IN DUCT AT A POINT ADJACENT TO FUSIBLE LINKAGE.

6 FIRE DAMPER DETAIL
NTS

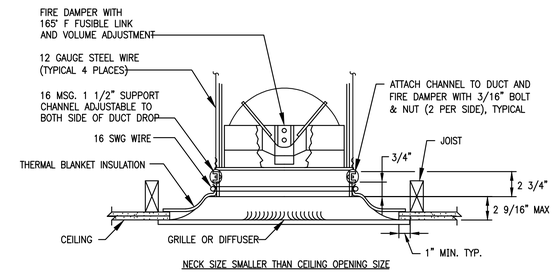

NECK SIZE SMALLER THAN CEILING OPENING SIZE

NOTES:

1. DAMPER SHALL BE U.L. CLASSIFIED UNDER U.L. STANDARD 555.
2. THERMAL BLANKET INSULATION SHALL BE U.L. CLASSIFIED UNDER U.L. STANDARD 555.
3. APPLIES TO DIFFUSERS RETURN GRILLES & TRANSFER GRILLES PENETRATING RATED CEILING.

5 RADIATION DAMPER DETAIL
NTS

RUSKIN MODEL NUMBER CFD7T OR EQUAL

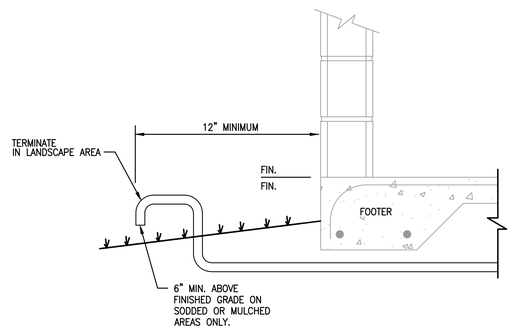

4 CONDENSATE DRAIN TERMINATION DETAIL
NTS

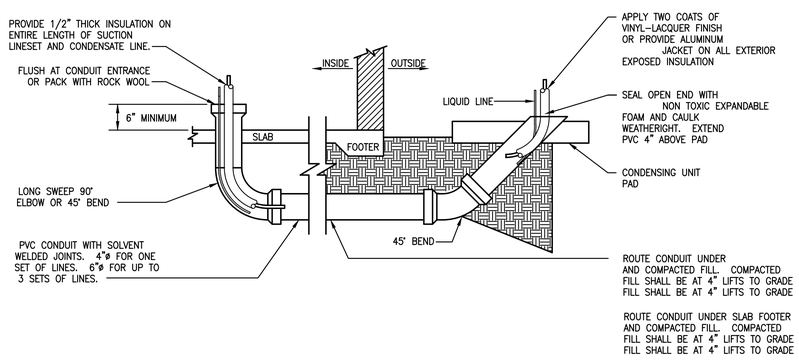

3 REFRIGERANT SLEEVE DETAIL
NTS

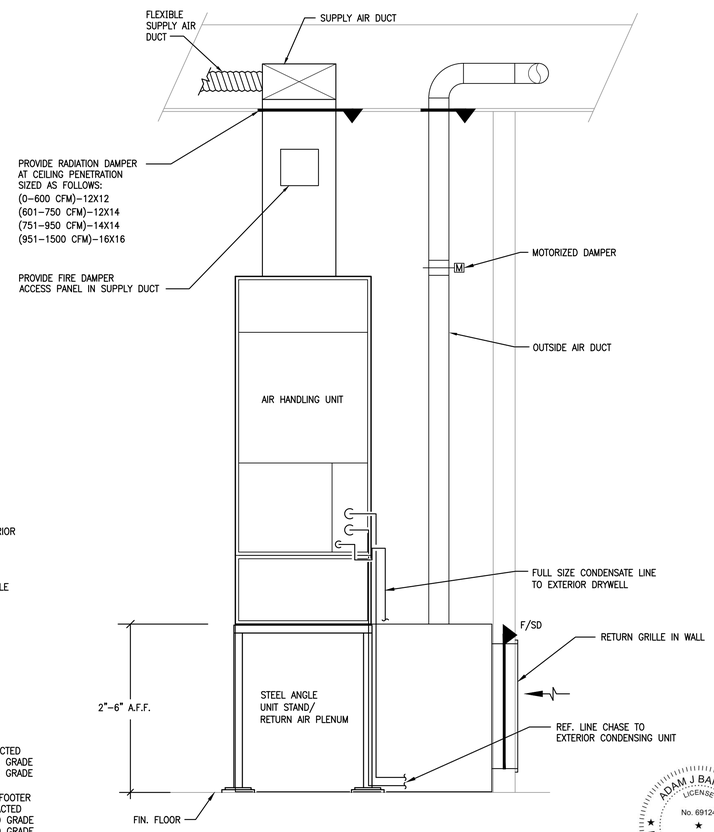

2 VERTICAL AHU DETAIL
NTS
(CORRIDORS)

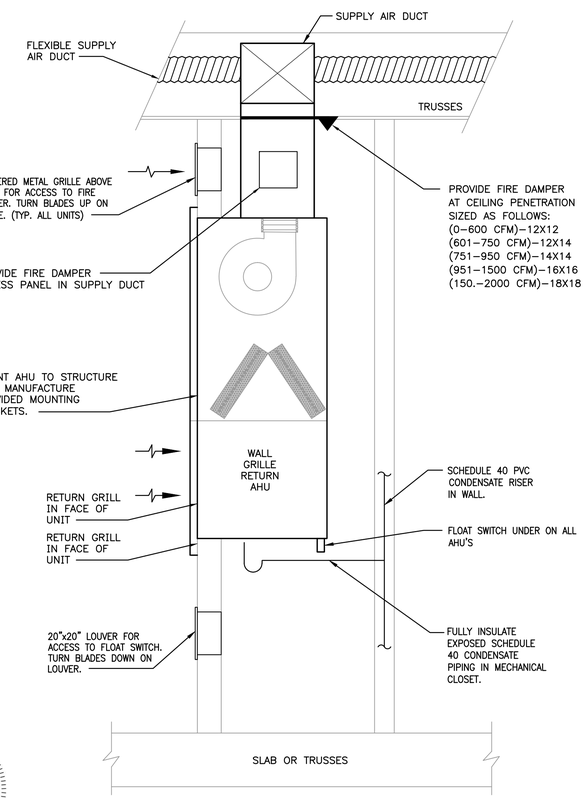

1 WALL MOUNTED AHU DETAIL
NTS
(UNITS)

ADAM J. BARNEY
LICENSE
No. 69124
STATE OF FLORIDA
PROFESSIONAL ENGINEER

Adam Barney
Jan 17 2018 3:07 PM
CoSign

PERMIT REVIEW STAMP

ISSUE HISTORY

No.	Date	Description
1	1/18/2018	ISSUE FOR PERMIT

REVISION HISTORY

No.	Date	Description

© 2011 These documents and their contents are the property of FUGLEBERG KOCH, PLLC - A20000103 and are issued only for the specific project noted on these drawings. Any reproductions, revisions, or modifications of these documents without the expressed written consent of Fugleberg Koch, PLLC is prohibited by law.

FUGLEBERG KOCH
2555 Temple Trail, Winter Park, FL 32789 (407) 629-0595
www.fuglebergkoch.com BR569

CONSULTANT
Joseph, Lawrence & Co
Consulting Engineers
1180 HARWOOD AVE. SUITE 3000
ALTAMONTE SPRINGS, FLORIDA 32714
TEL: 321.972.4466
WWW.JLCENG.COM
CA NO. 28730

JLC 17.0137.00

Adam Joseph Barney
P.E. #:69124

SUMMER BAY APTS. II
LAKE COUNTY, FL

Drawn:	MJR/KCM
Checked:	BLS/AJB
Approval:	BLS/AJB
Date:	11/10/2017
Project #:	5389

DETAILS - MECHANICAL

M6.02